DATE REVISED	DATE FILMED	DATE REVISED	DATE FILMED	FED. ROAD DIST. NO.	STATE	FED. AID PROJ. NO.	SHEET NO.	TOTAL SHEETS
5-21-86	7-21-86			6	ARK.			
RESHOT	21-9-4-86			JOB NO.		4819	8	59

(1) 6114-6116 QUANTITIES 27211

SCHEDULE OF BRIDGE QUANTITIES

BRIDGE NO. / CODE NO. / NAME & TITLE	ITEM NO.	801	SP & 802	SP & 802	803	804	805	805	SP & 807	SP & 809	812	SP & 816	SP & 816	SP-820	SP & 603	205
	ITEM	UNCLASSIFIED EXCAVATION FOR STRUCTURES-BRIDGE	CLASS S CONCRETE	CLASS S(AE) CONCRETE	BOILED LINSEED OIL	REINFORCING STEEL (GRADE 60)	STEEL BEARING PILING (HP 10 x 42)	STEEL BEARING PILING (HP 12 x 53)	STRUCTURAL STEEL IN BEAM SPANS (A588)	PREFORMED JOINT SEALER	BRIDGE NAME PLATES (TYPE C)	DUMPED RIPRAP	FILTER BLANKET	PILE ENCASEMENT	TEMPORARY BRIDGE STRUCTURES	REMOVAL OF EXISTING BRIDGE STRUCTURES
	UNIT OF STRUCTURE / UNIT	CU. YD.	CU. YD.	CU. YD.	GAL.	LB.	LIN. FT.	LIN. FT.	LB.	LIN. FT.	EACH	CU. YD.	SQ. YD.	LIN. FT.	LUMP SUM	LUMP SUM
6114 / X071 / BIG CREEK	END BENT NOS. 1 & 5	74	23.39		0.2	3086	168		901		1	368	735			
	INT. BENT NOS. 2 THRU 4	154	71.11			9850										
	4-43'-0" COMP. W-BEAM SPANS			~~162.80~~	14.4	34,484			93,729	165.0						
	TOTAL FOR BRIDGE NO. 6114	228	94.50	~~162.80~~	14.6	47,420	168		94,630	165.0	1	368	735		0.5	.32
6115 / X071 / BIG CREEK RELIEF	END BENT NOS. 1 & 8	70	23.36		0.2	3086	224		901		1	246	493			
	INT. BENT NOS. 2 THRU 7		42.04			5112		648						128		
	7-40'-0" COMP. W-BEAM SPANS			265.40	23.3	56,092			144,759	264.0						
	TOTAL FOR BRIDGE NO. 6115	70	65.40	265.40	23.5	64,290	224	648	145,660	264.0	1	246	493	128	0.5	** .37
6116 / X071 / DOCTORS CREEK	END BENT NOS. 1 & 5		22.33		0.2	3086	120		901		1	299	598			
	INT. BENT NOS. 2 THRU 4	48	68.67			9460										
	4-35'-0" COMP. W-BEAM SPANS			136.60	11.7	26,884			77,739	165.0						
	TOTAL FOR BRIDGE NO. 6116	48	91.00	136.60	11.9	39,430	120		78,640	165.0	1	299	598			.31
TOTAL FOR JOB NO. 4819		* 346	250.90	564.80	50.0	151,140	512	648	318,930	594.0	3	913	1,826	128	1.0	1.00

* Includes Approx. 48 Cu. Yd. Rock Excavation
** Includes The Removal of Two Bridges: M1709 & M1710

PHIL BRAND
DESIGN SECTION SUPERVISOR

SCHEDULE OF BRIDGE QUANTITIES
LAVACA – HWY. 217 BRS. & APPRS.
SEBASTIAN COUNTY
ROUTE 96 SEC. 3
ARKANSAS STATE HIGHWAY COMMISSION
LITTLE ROCK, ARK.

DRAWN BY: LDF DATE: 5-12-86
CHECKED BY: CES DATE: 5-16-86
DESIGNED BY: DATE:
SCALE:

Vernal Pinkerton
BRIDGE ENGINEER

BRIDGE NO. 6114-6116 DRAWING NO. 27211

FED. ROAD NO.	STATE	FED. AID PROJ. NO.	SHEET NO.	TOTAL SHEETS
6	ARK.			
JOB NO.	4819		16	59

6114 ~ LAYOUT ~ 27212

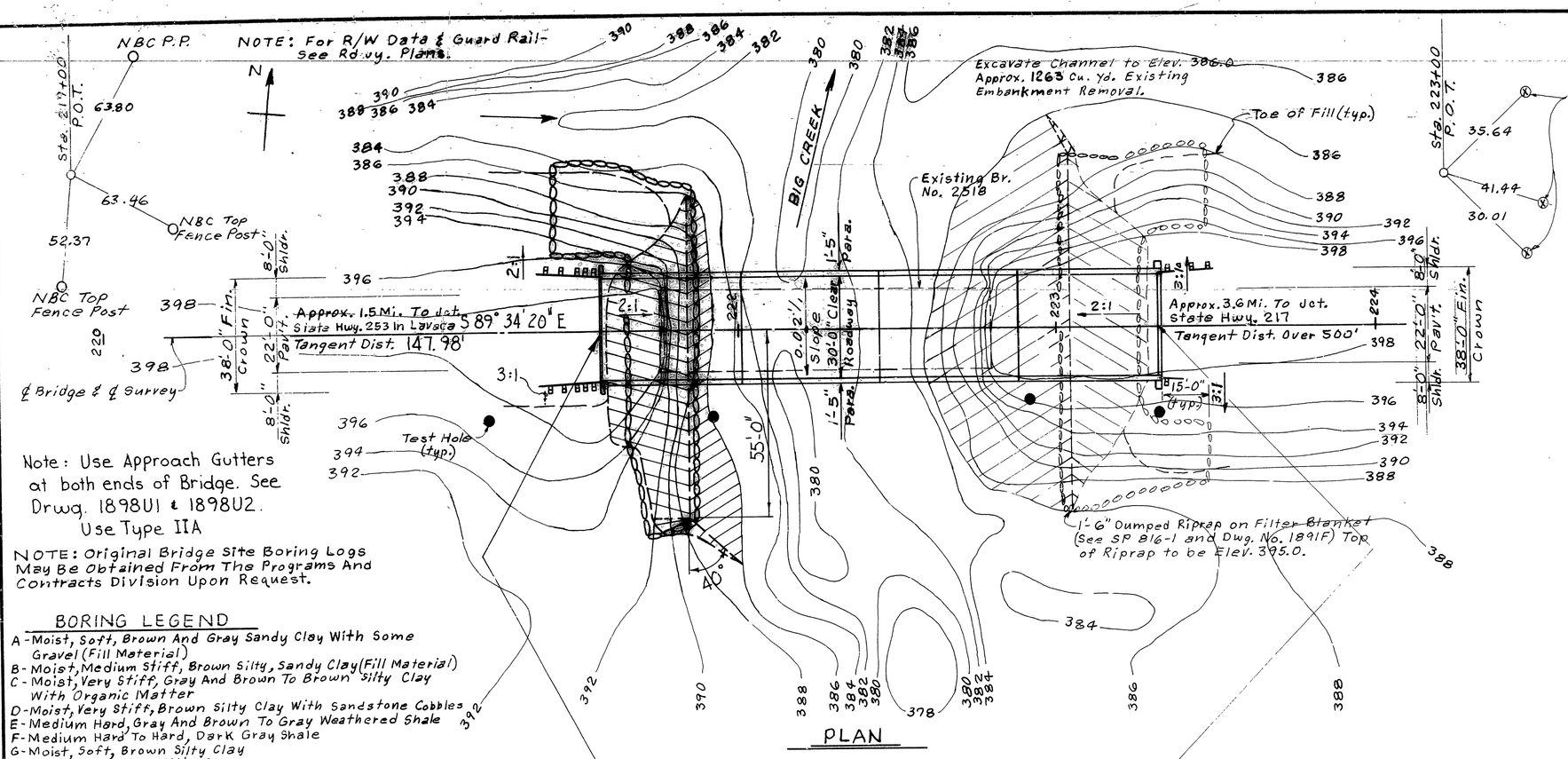

Note: Use Approach Gutters at both ends of Bridge. See Drwg. 1898U1 & 1898U2. Use Type IIA

NOTE: Original Bridge Site Boring Logs May Be Obtained From The Programs And Contracts Division Upon Request.

BORING LEGEND

A - Moist, Soft, Brown And Gray Sandy Clay With Some Gravel (Fill Material)
B - Moist, Medium Stiff, Brown Silty, Sandy Clay (Fill Material)
C - Moist, Very Stiff, Gray And Brown To Brown Silty Clay With Organic Matter
D - Moist, Very Stiff, Brown Silty Clay With Sandstone Cobbles
E - Medium Hard, Gray And Brown To Gray Weathered Shale
F - Medium Hard To Hard, Dark Gray Shale
G - Moist, Soft, Brown Silty Clay
H - Moist, Soft, Gray Silty Clay
I - Medium Hard, Gray Weathered Shale
J - Hard, Dark Gray Shale
K - Moist, Soft, Brown To Gray And Brown Silty Clay With Some Gravel (Fill Material)
L - Wet, Soft, Gray Clayey Silt
M - Moist, Soft To Medium Stiff, Brown Silty Clay (Fill Material)
N - Wet, Very Loose, Brown Silty Sand

"N" VALUES

Sta. 221+22 - 26' Rt. of ℄: 5.5'-6.5', N=5; 8.5'-9.5', N=25; 11.5'-12.5', N=21; 14.5'-15.5', N=43; 17.5'-18.5', N=60+; 19.5'-20.0', N=60; 22.0'-22.2', N=60.
Sta. 221+92 - 25' Rt. of ℄: 5.5'-6.5', N=2; 7.5'-7.8', N=60.
Sta. 222+91 - 21' Rt. of ℄: 5.5'-6.5', N=2; 8.5'-9.5', N=3; 15.5'-16.5', N=2; 20.5'-21.5', N=5; 22.5'-22.7', N=60; 25.5'-25.6', N=60.
Sta. 223+32 - 25' Rt. of ℄: 5.5'-6.5', N=6; 9.5'-10.5', N=2; 15.5'-16.5', N=2; 19.5'-20.5', N=23; 22.5'-22.7', N=60.

* Based on Working Point at ℄ Bridge; See Rounding Detail on Dwg. No. 27215

PLAN

TOTAL LENGTH OF BRIDGE = 174'-1"
4 - 43'-0" COMPOSITE W-BEAM SPANS
1'-0½" 1'-0½"
1" Joint (typ. except as noted)
LEVEL GRADE
1⅝" Joint

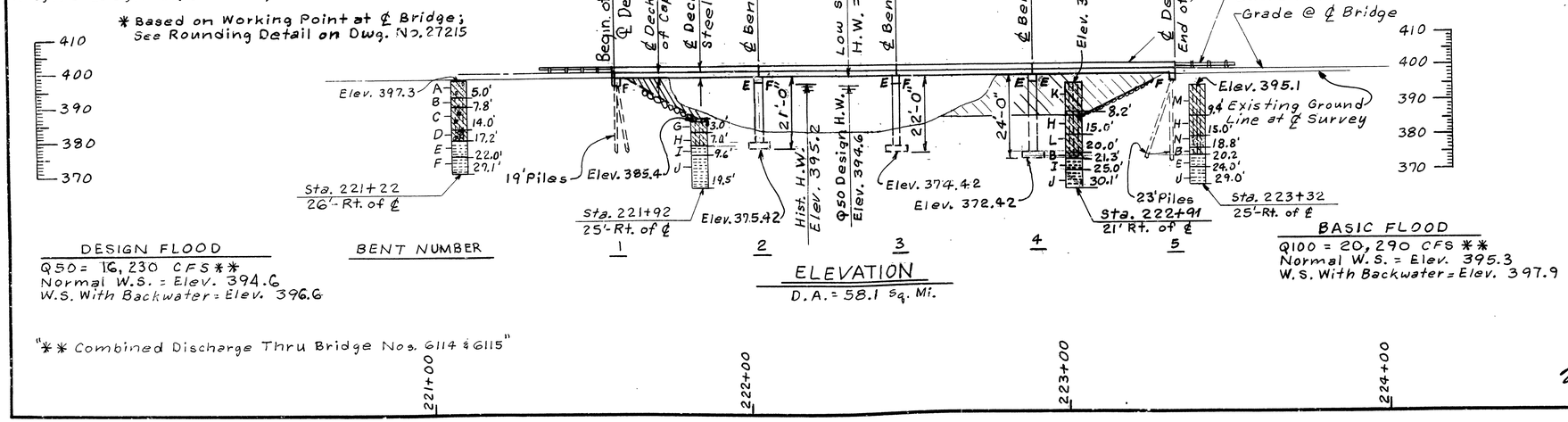

DESIGN FLOOD

Q50 = 16,230 CFS **
Normal W.S. = Elev. 394.6
W.S. With Backwater = Elev. 396.6

BASIC FLOOD

Q100 = 20,290 CFS **
Normal W.S. = Elev. 395.3
W.S. With Backwater = Elev. 397.9

"** Combined Discharge Thru Bridge Nos. 6114 & 6115"

GENERAL NOTES

BENCH MARK: CHISELED "□" ON WHEELGUARD N.W. CORNER BRIDGE 11' LEFT STA. 221+76, ELEV. 399.13.

FOOTINGS SHALL BE SET A MINIMUM OF 1'-6" INTO MED. HARD WEATHERING SHALE. THE TOP OF THE FOOTINGS FOR BENTS 2 THRU 4 SHALL ALSO BE BELOW THE BOTTOM OF THE STREAM BED. ROCK EXCAVATIONS SHALL BE MADE TO NEAT LINES OF THE CONCRETE FOOTINGS. CARE SHALL BE EXERCISED TO AVOID SHATTERING OF ROCK FACES BY EXCESSIVE BLASTING. CONCRETE IN FOOTINGS SHALL BE POURED DIRECTLY AGAINST EXCAVATED SURFACES OF ROCK.

ALL CONCRETE SHALL BE POURED IN THE DRY.

ALL PILING SHALL BE HP10X42 STEEL BEARING PILING AND SHALL BE DRIVEN WITH AN APPROVED AIR, STEAM, OR DIESEL HAMMER TO A MINIMUM BEARING CAPACITY OF 55 TONS PER PILE, AND TO A MINIMUM PENETRATION OF 15' BELOW THE GROUND LINE, AND INTO THE MATERIAL DESIGNATED AS HARD SHALE. LENGTHS SHOWN ARE FOR ESTIMATING QUANTITIES AND FOR USE IN DETERMINING PAYMENT FOR CUT-OFF AND BUILD-UP IN ACCORDANCE WITH THE SPECIFICATIONS. PILES IN END BENTS TO BE DRIVEN AFTER EMBANKMENT TO BOTTOM OF CAP IS IN PLACE.

FOR DETAILS OF END BENTS, SEE DWG. NO. 27213
FOR DETAILS OF INTERMEDIATE BENTS, SEE DWG. NO. 27214
FOR DETAILS OF 43'-0" W-BEAM SPANS, SEE DWG. NO. 27215

SPECIFICATIONS: ARKANSAS STATE HIGHWAY COMMISSION STANDARD SPECIFICATIONS FOR HIGHWAY CONSTRUCTION, EDITION OF 1978 AND APPLICABLE SPECIAL PROVISIONS.

DESIGN SPECIFICATIONS: AASHTO 1983 EDITION WITH INTERIMS.

LIVE LOADING: HS20

METHOD OF DESIGN: LOAD FACTOR

UNIT STRESSES: CLASS "S" OR "S(AE)" CONCRETE: 3500 PSI
REINFORCING STEEL (GRADE 60) = 60,000 PSI
STRUCTURAL STEEL (A588) = 50,000 PSI

REMOVAL OF EXISTING BRIDGE: THE CONTRACTOR SHALL REMOVE THE EXISTING 104' PONY TRUSS BRIDGE (2518) CONSISTING OF CONCRETE ABUTMENTS SUPPORTING A CONCRETE DECK AND AN ASPHALT OVERLAY. THE BRIDGE RAIL POSTS AND THE GUARD RAIL SHALL REMAIN THE PROPERTY OF THE STATE. ALL OTHER MATERIAL FROM THE EXISTING BRIDGE SHALL BECOME THE PROPERTY OF THE CONTRACTOR FOR HIS DISPOSAL. REFER TO SECTION 205 OF THE STANDARD SPECIFICATIONS.

DETOUR CONSTRUCTION: THE CONTRACTOR SHALL CONSTRUCT A TEMPORARY BRIDGE 40 FT. SOUTH OF CENTERLINE SURVEY. THE BRIDGE SHALL HAVE A MINIMUM LENGTH OF 110 FT., A MINIMUM ROADWAY WIDTH OF 20 FT., A MINIMUM DECK ELEVATION OF 394.5, AND H15 LIVE LOAD CAPACITY. SEE SECTION 603 OF THE STANDARD SPECIFICATIONS, SPECIAL PROVISION 603-3, AND STANDARD DRAWING NOS. 2391 and 2392. IF TIMBER PILING AND PINE TIMBER ARE USED ON THIS TEMPORARY BRIDGE, THE MATERIALS SHALL BE TREATED WITH A PRESERVATIVE ACCORDING TO THE STANDARD SPECIFICATIONS.

DECK FINISH: THE BRIDGE DECK SHALL BE GIVEN A TINE FINISH AS SPECIFIED FOR FINAL FINISHING IN SUBSECTION 802.23 FOR A CLASS 6 ROADWAY SURFACE FINISH.

1 Revised - Changed Length of Bridge. 2-25-86 LDF
2 Revised - Changed R.C. Slab Spans to Composite W-Beam Spans. 3-31-86 LDF CKd: CES 5-15-86

LAYOUT OF BRIDGE OVER BIG CREEK
LAVACA - HWY. 217 BR. & APPRS.
SEBASTIAN COUNTY

ROUTE 96 SEC. 3

ARKANSAS STATE HIGHWAY COMMISSION
LITTLE ROCK, ARK.

DRAWN BY: LDF DATE: 10-29-84
CHECKED BY: DYE DATE: 11-7-84
DESIGNED BY: GRH DATE: 10-84
SCALE: 1" = 20'-0"

Burel Pinkston
BRIDGE ENGINEER

BRIDGE NO. 6114 DRAWING NO. 27212

DATE REVISED	DATE FILMED	DATE REVISED	DATE FILMED	FED. ROAD DIST. NO.	STATE	FED. AID PROJ. NO.	SHEET NO.	TOTAL SHEETS
5-21-86	5-10-6-27-86			6	ARK.			
				JOB NO.		4819	17	59

(1) 6114, 6115 & 6116-End Bents-27213

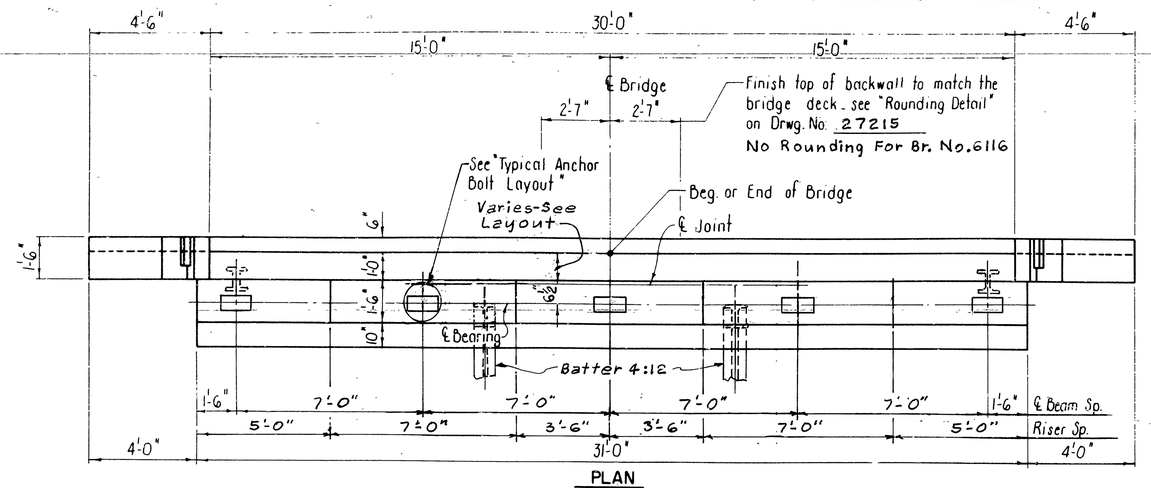

PLAN
Scale: 3/8" = 1'-0"

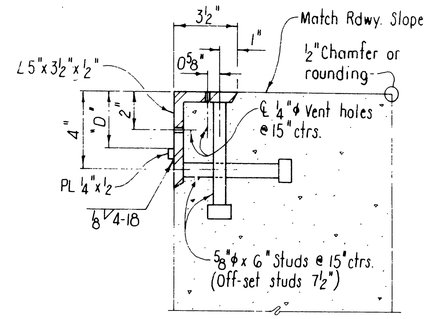

Note: For dimension "D" see Std. Drwg. 14990H

DETAIL "X"
No Scale

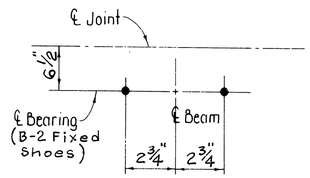

TYPICAL ANCHOR BOLT LAYOUT
No Scale

BAR LIST_EACH BENT

MARK	NO. REQ'D.	LENGTH	PIN DIA.
B401	~~40~~	10'-4"	2"
B402	12	6'-6"	2"
B403	2	30'-8"	Str.
B404	60	4'-3"	Str.
B405	30	3'-11"	2"
B406	8	30'-0"	Str.
B601	6	30'-8"	Str.
B602	5	32'-0"	4½"
W401	10	3'-11"	Str.
W402	10	4'-1"	2"
W403	2	4'-2"	Str.
W404	22	6'-0"	Str.
P401	12	1'-3"	Str.
P601	8	4'-3"	Str.
P602	6	4'-5"	3¾"

BENDING DIAGRAMS

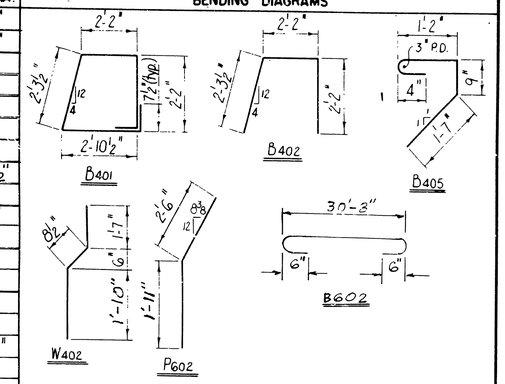

Note: Dimensions are out to out of Bars.

GENERAL NOTES

ALL CONCRETE SHALL BE CLASS S AND SHALL HAVE A MINIMUM 28 DAY COMPRESSIVE STRENGTH, f'c = 3500 PSI. ALL CONCRETE SHALL BE POURED IN THE DRY. UNLESS OTHERWISE NOTED, ALL EXPOSED CORNERS SHALL BE CHAMFERED 3/4 INCH.

REINFORCING STEEL SHALL CONFORM TO ASTM A615 OR A617, GRADE 60 (YIELD STRENGTH = 60,000 PSI).

ALL PILING SHALL BE HP [illegible] AND SHALL BE DRIVEN TO A MINIMUM BEARING CAPACITY OF 55 TON [illegible]E. SEE LAYOUT FOR ADDITIONAL PILING NOTES.

STRUCTURAL STEEL IN BACKWA[illegible] ALL CONFORM TO ASTM A588 & SHALL BE PAID FOR AT THE CONTRACT UNIT PRICE PER POUND BID FOR "STRUCTURAL STEEL IN BEAM SPANS A588."

BACKWALL SHALL NOT BE POURED UNTIL BEAMS ARE IN PLACE.

DESIGN SPECIFICATIONS: AASHTO STANDARD SPECIFICATIONS FOR HIGHWAY BRIDGES, 1983 EDITION, WITH CURRENT INTERIMS.

LIVE LOADING: HS20

METHOD OF DESIGN: LOAD FACTOR

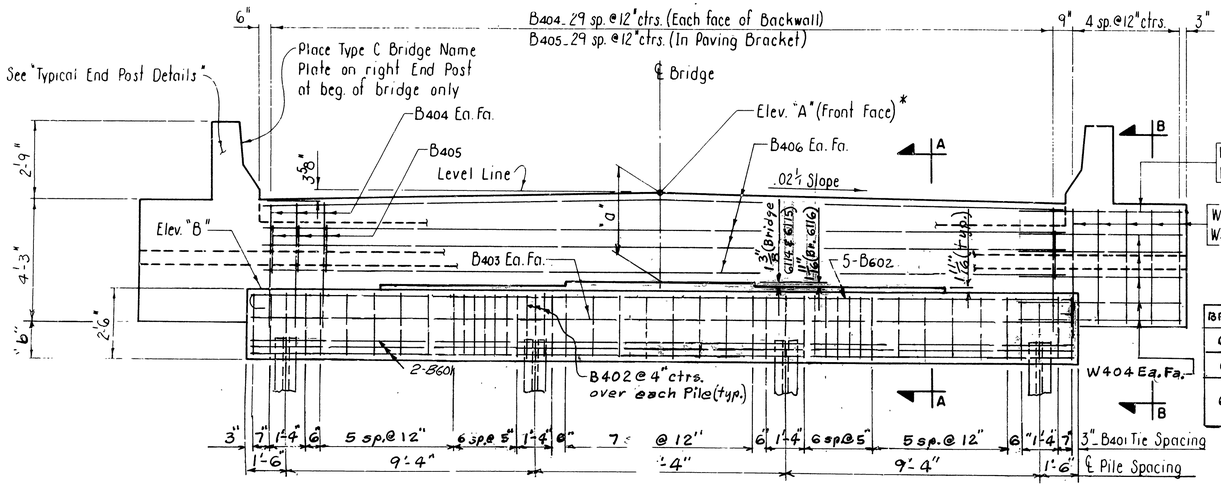

ELEVATION
Scale: [illegible]"=1'-0"

For Br. No's. 6114 & 6115 Only

*Elevations shown are theoretical elevations along ℄ Bridge at Working Point. See "Rounding Detail" on Drwg. No. 27215

TABLE OF VARIABLES

BRIDGE NO.	BENT NO.	"a"	"b"	ELEV. "A"	ELEV. "B"
6114	1 & 5	2'-9 7/8"	1'-0 5/16"	399.50	396.42
6115	1 & 8	2'-9 7/8"	1'-0 5/16"	399.50	396.42
6116	1	** See Elevation			
	5	2'-4 1/16"	0'-6 13/16"	402.460	399.842

Data By: LDF 5-7-86
Ck'd. By: CES 5-9-86

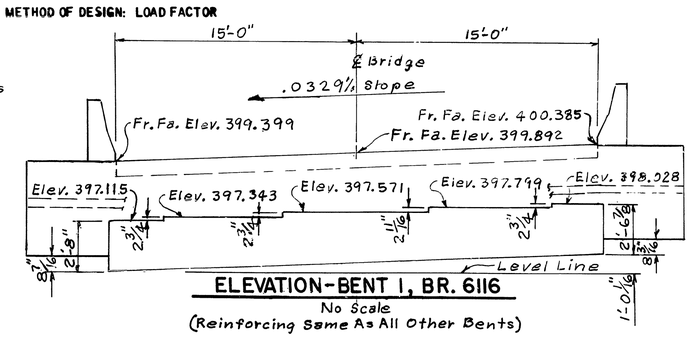

ELEVATION-BENT 1, BR. 6116
No Scale
(Reinforcing Same As All Other Bents)

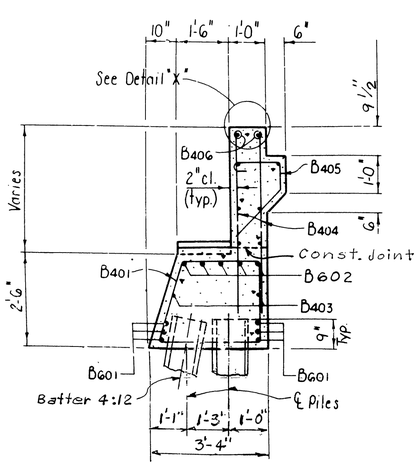

SECTION A-A
Scale: ½"=1'-0"

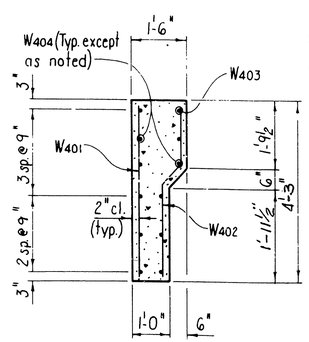

SECTION B-B
No Scale

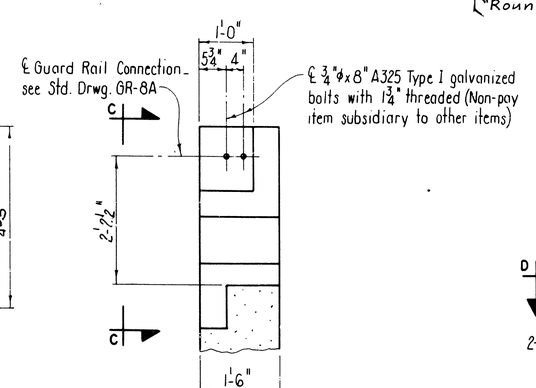

TYP. END POST DETAILS
Scale: ¾"=1'-0"

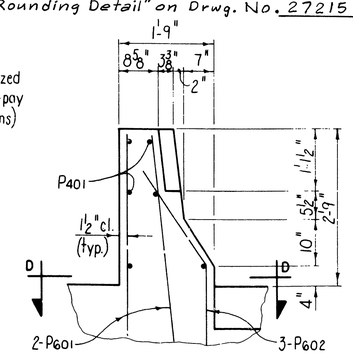

VIEW C-C
Scale: ¾"=1'-0"

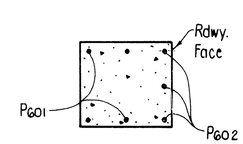

SECTION D-D
Scale: ¾"=1'-0"

DETAILS OF
STANDARD PILE END BENTS
LAVACA- HWY. 217 BR. & APPRS.
SEBASTIAN COUNTY

ROUTE 96 SEC. 3
ARKANSAS STATE HIGHWAY COMMISSION
LITTLE ROCK, ARK.

DRAWN BY: LDF DATE: 5-1-86
CHECKED BY: CES DATE: 5-9-86
DESIGNED BY: IJK DATE: 3-86
SCALE: AS SHOWN

Vural Pinkerton
BRIDGE ENGINEER

BRIDGE NO. 6114, 6115 & 6116
DRAWING NO. 27213

DATE REVISED	DATE FILMED	DATE REVISED	DATE FILMED	FED. ROAD DIST. NO.	STATE	FED. AID PROJ. NO.	SHEET NO.	TOTAL SHEETS
5-21-86	735-6-24-86			6	ARK.			
				JOB NO.		4819	18	59
				(1)	6114	BENT DETAILS	27214	

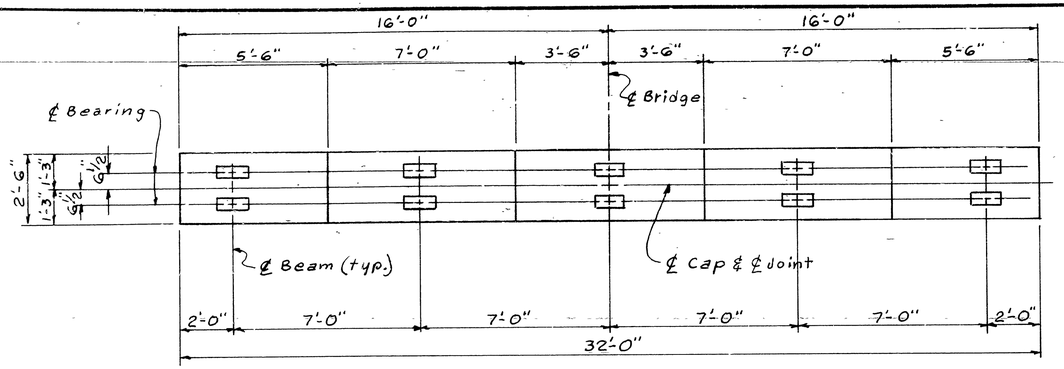

PLAN

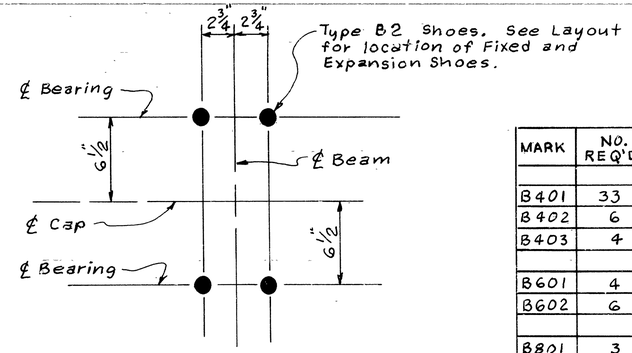

ANCHOR BOLT LAYOUT

Scale: 2" = 1'-0"

BAR LIST — PER BENT

MARK	NO. REQ'D.	LENGTH	A	B	PIN DIA.
B401	33	10'-6"	2'-2"	2'-8"	2"
B402	6	7'-4"	2'-2"	2'-8"	2"
B403	4	31'-8"	—	—	Str.
B601	4	31'-8"	—	—	Str.
B602	6	11'-2"	—	—	Str.
B801	3	16'-6"	—	—	Str.
B802	4	31'-8"	—	—	Str.
C401	"F"	9'-2"	2'-1"	2'-1"	2"
C801	24	"G"	—	—	Str.
F501	44	5'-6"	—	—	Str.
F801	24	7'-0"	5'-10"	1'-4"	6"

BENDING DIAGRAMS

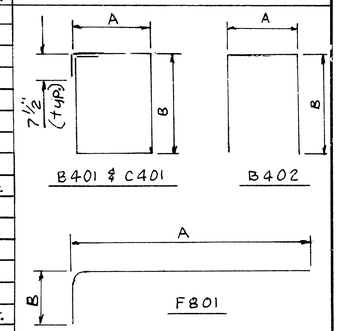

Dimensions Are Out To Out Of Bars.

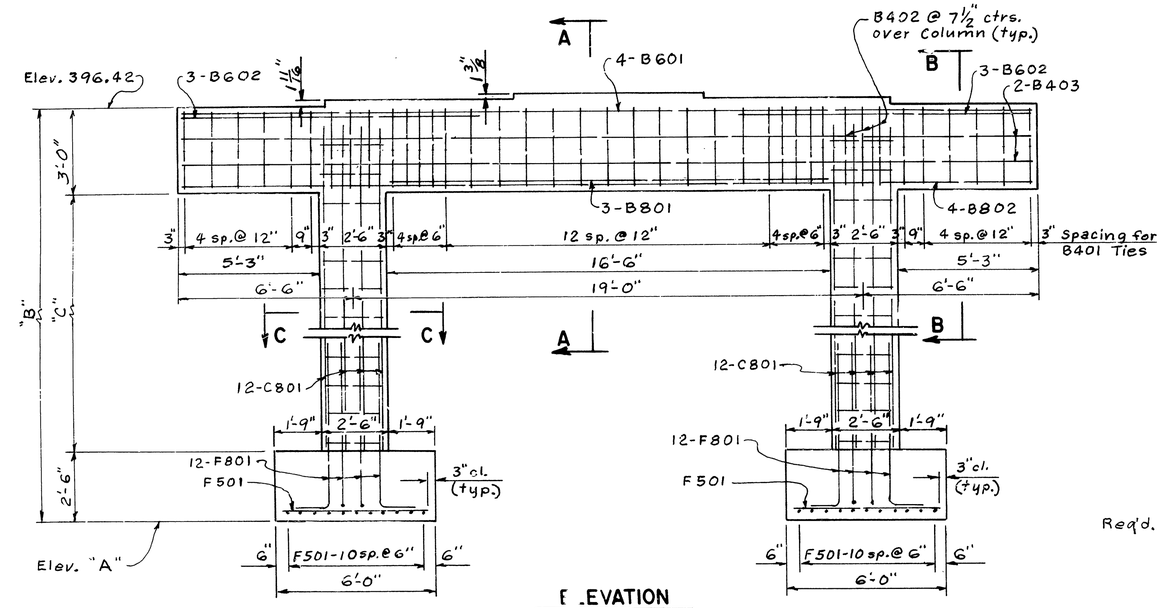

ELEVATION

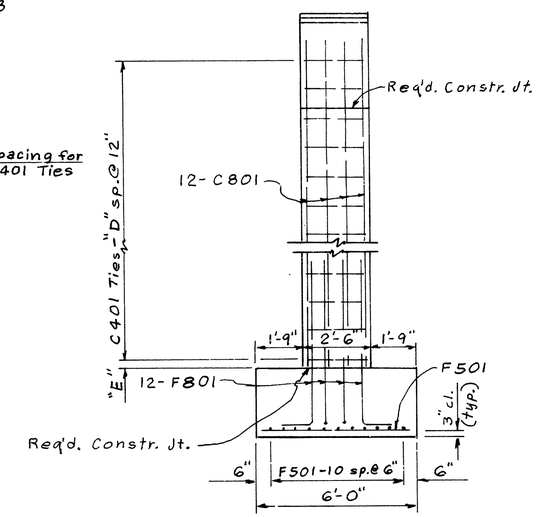

END VIEW

GENERAL NOTES

ALL CONCRETE TO BE CLASS "S" AND SHALL BE POURED IN THE DRY. ALL EXPOSED CORNERS TO BE CHAMFERED 3/4" UNLESS OTHERWISE NOTED.

SPECIFICATIONS: ARKANSAS STATE HIGHWAY COMMISSION STANDARD SPECIFICATIONS FOR HIGHWAY CONSTRUCTION, EDITION OF 1978 AND APPLICABLE SPECIAL PROVISIONS.

LIVE LOAD: HS20

DESIGN SPECIFICATIONS: AASHTO STANDARD SPECIFICATIONS FOR HIGHWAY BRIDGES, 1983 WITH CURRENT INTERIM SPECIFICATIONS.

METHOD OF DESIGN: LOAD FACTOR

REINFORCING STEEL: REINFORCING STEEL SHALL CONFORM TO ASTM A615 OR A617, GRADE 60 (YIELD STRENGTH = 60,000 PSI).

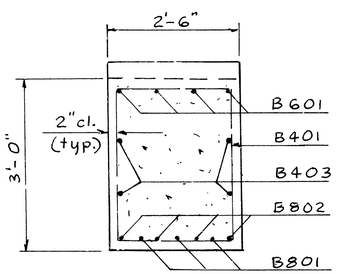

SECTION A-A

Scale: ¾" = 1'-0"

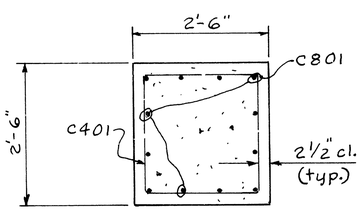

SECTION C-C

Scale: ¾" = 1'-0"

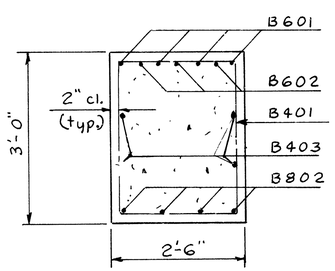

SECTION B-B

Scale: ¾" = 1'-0"

TABLE OF VARIABLES

	ELEV. "A"	"B"	"C"	"D"	"E"	"F"	"G"
BENT NO. 2	375.42	21'-0"	15'-6"	17	3"	36	18'-0"
BENT NO. 3	374.42	22'-0"	16'-6"	18	3"	38	19'-0"
BENT NO. 4	372.42	24'-0"	18'-6"	20	3"	42	21'-0"

DETAILS OF INTERMEDIATE BENTS

BIG CREEK

SEBASTIAN COUNTY

ROUTE 96 SEC. 3

ARKANSAS STATE HIGHWAY COMMISSION

LITTLE ROCK, ARK.

DRAWN BY: LDF DATE: 5-1-86
CHECKED BY: CES DATE: 5-12-86
DESIGNED BY: [illegible] DATE: 4-86

SCALE: ⅜" = 1'-0" or as noted

Verel Pinkerton
BRIDGE ENGINEER

BRIDGE NO. 6114

DRAWING NO. 27214

DATE REVISED	DATE REVISED	DATE REVISED	DATE REVISED	FED. ROAD NO.	STATE	FED. AID PROJ. NO.	SHEET NO.	TOTAL SHEETS
5-21-86	7-26-86 2-12-85			6	ARK.			
				JOB NO.	4819		19	59

6114 & 6115 - SPAN DETAILS 27215

Note: Boiled Linseed Oil Treatment shall be applied to the Roadway Surface & to the Face and top of the Parapet Rail.

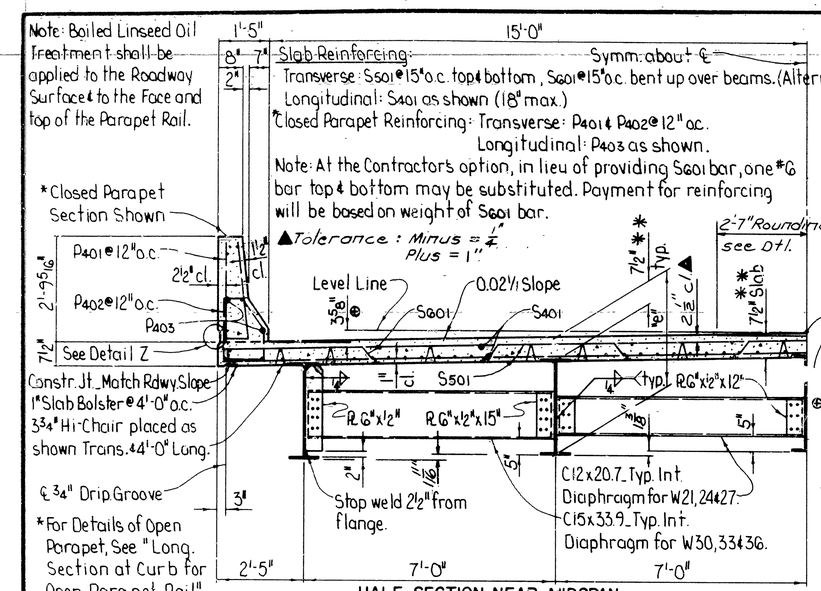

*For Details of Open Parapet, See "Long. Section at Curb for Open Parapet Rail."

HALF-SECTION NEAR MIDSPAN

Scale: 1/2" = 1'-0"

** See "Slab Thickening And/or Haunch Detail," Dwg. No. 14990H

Expansion Device

Rdwy. Channel C15x33.9 - Conn. Angles 6" x 3½" x ⅜" x 0'-8". Preformed Joint Sealer supported by ¼" x ½" bar. Detail Device ⅛" high & provide ¼" shims using 1-⅛" PL & 2-1/16" PL. ⅝" ϕ x 8" Studs @ 12" o.c. top & bottom. See Dwg. No. 14990H for Alternate Anchor Details.

Note: Holes for ¾" ϕ bolts may be 15/16" ϕ if a washer is supplied for use under both the nut & head of bolt.

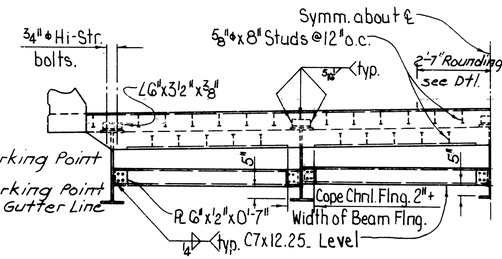

Note: Working Point Matches Theoretical Roadway Grade.

VIEW AT ℄ JOINT

Scale: 3/8" = 1'-0"

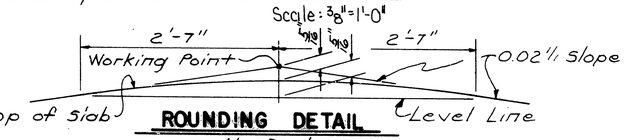

ROUNDING DETAIL

No Scale

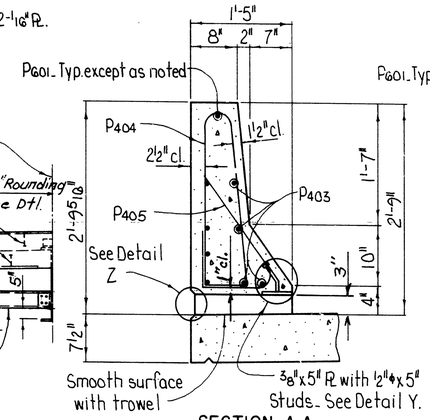

SECTION A-A

Scale: 1" = 1'-0"

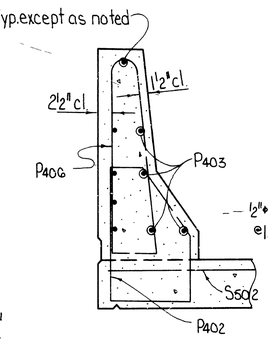

SECTION B-B

Scale: 1" = 1'-0"

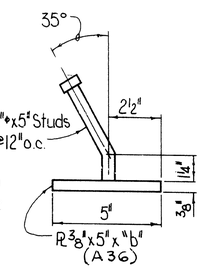

DETAIL Y

No Scale

Parapet Studs shall be 5" Long, Granular Flux Filled, Solid Fluxed, or equal & automatically end welded to plate. Studs & Plate are to be measured & paid for as "Structural Steel in Beam Spans" A588. The Surfaces of the ⅜" PL which will not be in contact with concrete shall receive two coats of paint in the shop. These coats shall be those specified as First Shop Coat & Second Field Coat in Subsection 807.59(a) & (c) and SP 807-1C.

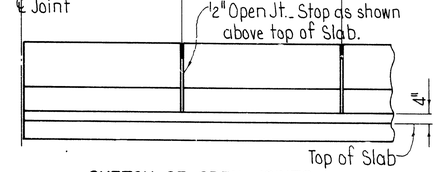

SKETCH OF OPEN JOINTS

No Scale

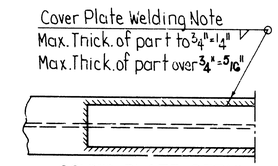

COVER PLATE DETAIL

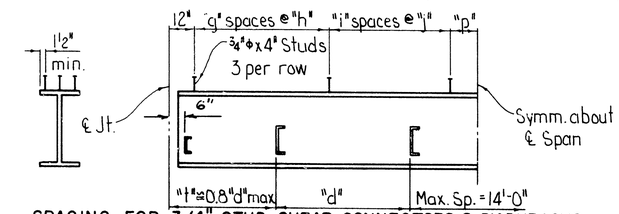

SPACING FOR 3/4" STUD SHEAR CONNECTORS & DIAPHRAGMS

No Scale

The ¾" ϕ x 4" Studs shall be granular flux filled, solid fluxed, or equal, and automatically end welded to the beam flanges in accordance with the manufacturer's recommendations. ⅞" ϕ Studs may be substituted for the ¾" ϕ Studs shown at the ratio of 0.735 - ⅞" Studs in place of 1 - ¾" Stud. The ¾" ϕ Studs shall be used as the basis of payment at 61.5# per 100 studs. Stud Spacing shall not exceed 24".

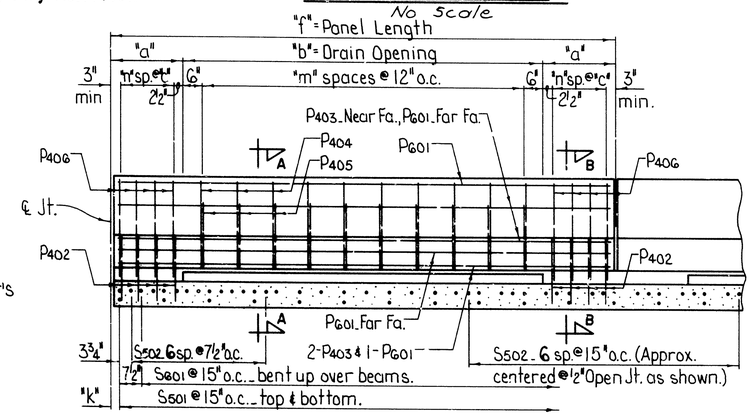

LONGITUDINAL SECTION AT CURB FOR OPEN PARAPET RAIL

Scale: 1/2" = 1'-0"

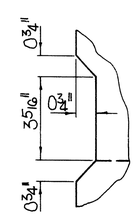

DETAIL Z

No Scale

GENERAL NOTES

ALL STRUCTURAL STEEL SHALL BE ASTM DESIGNATION A588 UNLESS OTHERWISE NOTED AND SHALL BE PAID FOR AT THE CONTRACT UNIT PRICE PER POUND BID FOR "STRUCTURAL STEEL IN BEAM SPANS A588." A588 STEEL SHALL NOT BE PAINTED. ALL EXPOSED SURFACES TO BE CLEANED IN ACCORDANCE WITH SP 807-12, "UNPAINTED WEATHERING STRUCTURAL STEEL." STRUCTURAL STEEL COMPLETELY EMBEDDED IN CONCRETE MAY BE ASTM A36.

BEAMS AND COVER PLATES ARE CONSIDERED MAIN LOAD CARRYING MEMBERS AND SHALL MEET THE LONGITUDINAL CHARPY V-NOTCH TEST SPECIFIED IN SECTION 807.05 OF THE STANDARD SPECIFICATIONS.

THIS DRAWING TO BE USED WITH DRAWING NO. 14990H

LIVE LOADING: HS20

METHOD OF DESIGN: LOAD FACTOR

DEAD LOAD:	INTERIOR BEAM	EXTERIOR BEAM
a. TO W-BEAM	650 PLF + 1.3(WT/FT OF W-BM)	550 PLF + 1.3(WT/FT OF W-BM)
b. TO COMPOSITE BEAM		
OPEN PARAPETS	285 PLF*	285 PLF*
CLOSED PARAPETS	299 PLF*	299*
LIVE LOAD:		
TO EACH COMPOSITE BEAM	1.273 WHEELS + IMPACT	1.217 WHEELS + IMPACT

*INCLUDES 144 PLF FUTURE WEARING SURFACE.

MATERIAL STRENGTH:

CLASS S(AE) CONCRETE (N-9)	$f'c$ = 3500 PSI	
REINFORCING STEEL (A615 OR A617)	fy = 60,000 PSI	
STRUCTURAL STEEL (A36)	fy = 36,000 PSI	
STRUCTURAL STEEL (A588)	fy = 50,000 PSI	

BAR LIST PER SPAN

MARK	SIZE	LENGTH CLOSED PARAPET	LENGTH OPEN PARAPET	DIA.	"S" = SPAN LENGTH 43'-0"	40'-0"		
					NUMBER REQUIRED			
P401	4	5'-6"	-	2"	—	—		
P402	4	6'-0"	6'-0"	2"	80	80		
P403	4	"f"-6"	"f"-6"	Str.	40	40		
P404	4	-	6'-4"	2"	50	50		
P405	4	-	3'-2"	2"	50	50		
P406	4	-	6'-10"	2"	80	80		
P601	6	-	"f"-6"	Str.	50	50		
S401*	4	"s"-6"	"s"-6"	Str.	—	78		
S401**	4	"s"/2 + 7"	"s"/2 + 7"	Str.	156	—		
S401***	4	"s"/3 + 12"	"s"/3 + 12"	Str.	—	—		
S501	5	32'-6"	32'-6"	Str.	70	64		
S502	5	-	4'-9"	Str.	84	84		
S601	6	33'-4"	33'-4"	3¾"	34	32		

*Use for span lengths under 40'.
**Use for span lengths between 40' to 78'.
***Use for span lengths between 78' to 90'.

BENDING DIAGRAMS

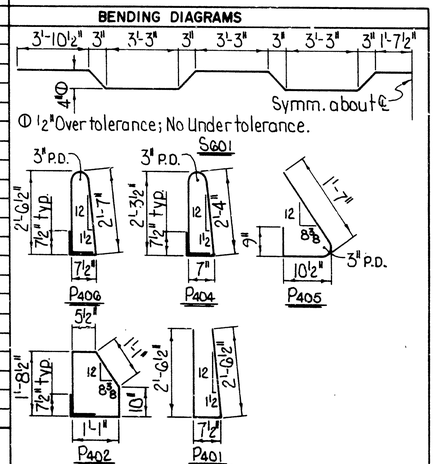

① ½" Over tolerance; No Under tolerance.

Dimensions are out to out of bars.

TABLE OF VARIABLES

Span No.	Span Length	Beam Size	Cover PL Size	"e"	Diaphragm Spacing "i"	Diaphragm Spacing "d"	Variables of Shear Connector Spacing "g"	"h"	"i"	"j"	"p"	Parapet Joint Sp. No. @ "f"	Variables of Open Parapet Rail "a"	"b"	"c"	"k"	"m"	"n"
All	43'-0"	W 24x76	—	2'-6 11/16"	7'-6"	9'-4"	15	8"	11	11"	5"	5 @ 8'-7½"	1'-4½"	3'-0"	5¾"	3"	4	3
All	40'-0"	W 24x68	—	2'-6 11/16"	6'-6"	9'-0"	18	8"	7	12"	0"	5 @ 8'-0"	1'-6"	5'-0"	4 5/16"	3¾"	4	3

DEAD LOAD DEFLECTIONS

Bridge No.	Beam	Structural Steel ¼ pt.	Structural Steel ½ pt.	Structural Steel + Slab ¼ pt.	Structural Steel + Slab ½ pt.	Str. Steel + Slab + Parapet Rail ¼ pt.	Str. Steel + Slab + Parapet Rail ½ pt.
6114	Interior	1/16"	1/8"	5/8"	7/8"	11/16"	15/16"
	Exterior	1/16"	1/8"	1/2"	3/4"	9/16"	13/16"
6115	Interior	1/16"	1/16"	1/2"	3/4"	9/16"	13/16"
	Exterior	1/16"	1/16"	7/16"	5/8"	1/2"	11/16"
	Interior						
	Exterior						
	Interior						
	Exterior						

Revised Rounding DTL's; 2-12-85

TABULAR DATA BY: LDF (4-22-86)
CHECKED BY: CES (5-8-86)

Verel Pinkerton
BRIDGE ENGINEER

DETAILS OF STANDARD
35'-90' COMPOSITE W-BEAM SPANS
CONCRETE PARAPET RAIL
(OPEN OR CLOSED)
30'-0" CLEAR ROADWAY
0.02 1/4 PEAKED CROWN
SEBASTIAN COUNTY
ROUTE 96 SEC. 3

ARKANSAS STATE HIGHWAY COMMISSION
LITTLE ROCK, ARK.

DRAWN BY: KDH DATE: 30 NOV 84
CHECKED BY: EH DATE: 30 Nov 84 SCALE: AS NOTED
DESIGNED BY: DATE:

BRIDGE NO. 6114 & 6115 DRAWING NO. 27215

DATE REVISED	DATE FILMED	DATE REVISED	DATE FILMED	FED ROAD NO.	STATE	FED AID PROJ.	FISCAL YEAR	SHEET NO.	TOTAL SHEETS
2/16/72	504-8-24-72	12-5-77	500-12-5-77	6	ARK.			32	
4 2-1-76	860-4-21-76	5-7-81	6-21-81	JOB NO.					
9 2-22-82	709-10-6-82	2-22-82	507-2-22-82						

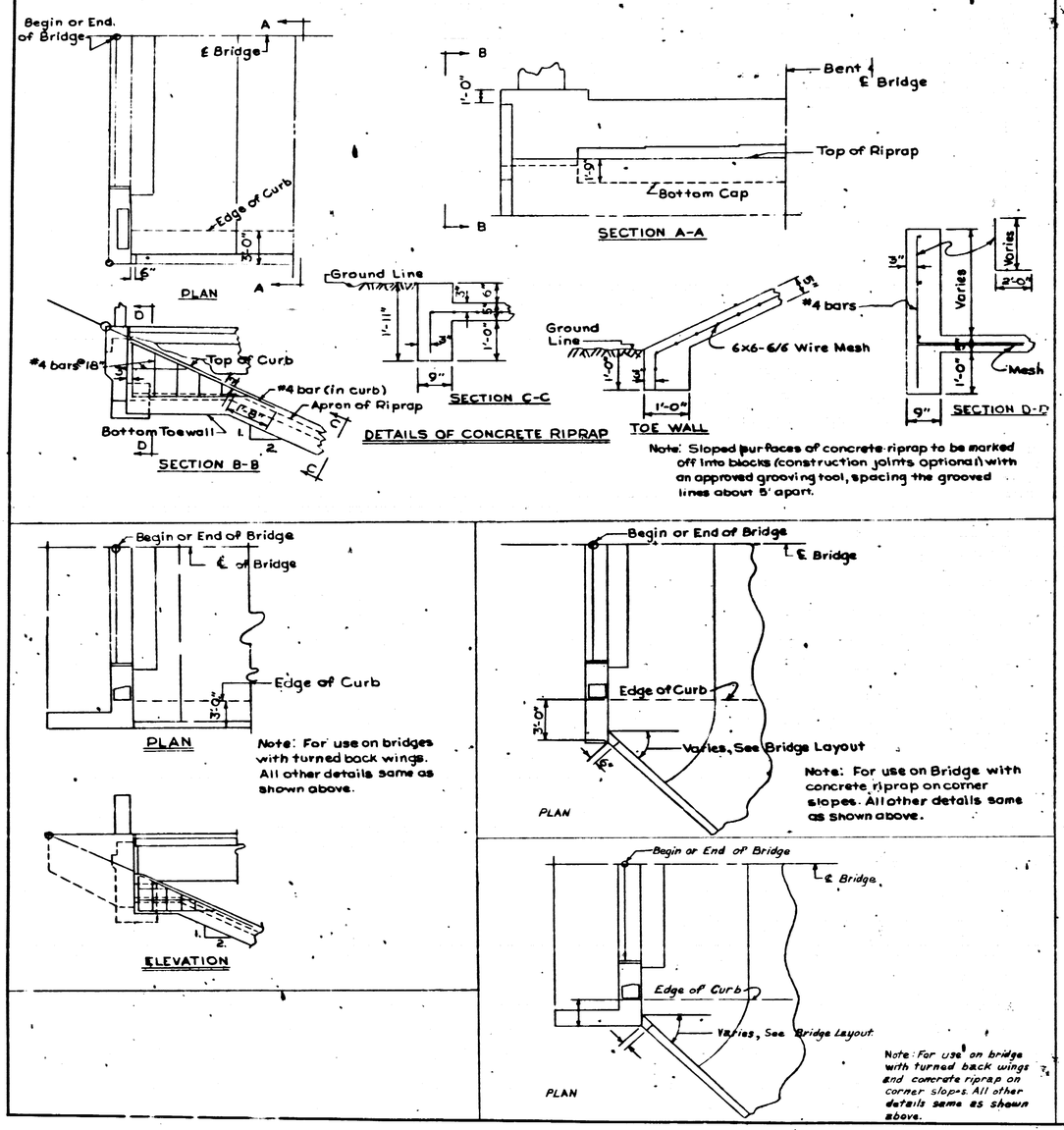

Note: Sloped surfaces of concrete riprap to be marked off into blocks (construction joints optional) with an approved grooving tool, spacing the grooved lines about 5' apart.

All bracing shall be cut and welded in the field. Each brace shall be furnished in one piece. Payment shall be made under item 807.

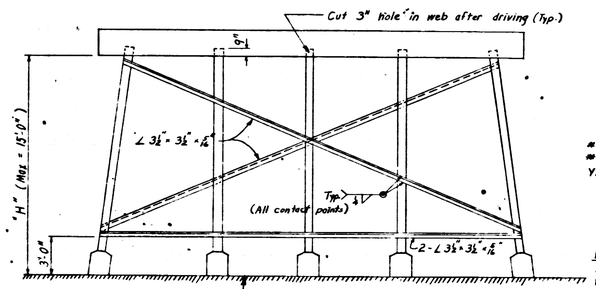

Omit bottom bracing where "H" is less than 10 ft. Omit all bracing where "H" is less than 5 ft.

TYPICAL BRACING FOR INT. STEEL PILE BENTS

No Scale

Note!! Omit Bracing where Pile Encasement is Extended to Bottom of Bent Cap.

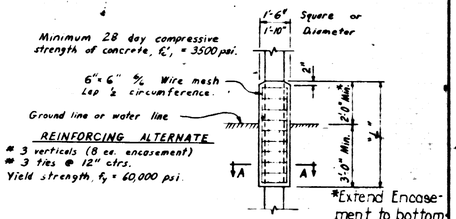

PILE ENCASEMENT DETAIL

NTS

NOTE: Concrete and Wire Mesh or Reinforcing in Encasements shall be paid for at the contract unit price per linear foot bid for "Pile Encasements."

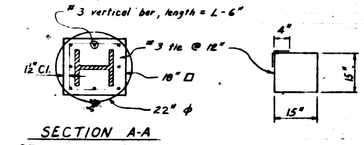

SECTION A-A

REINF. ALTERNATE

NTS

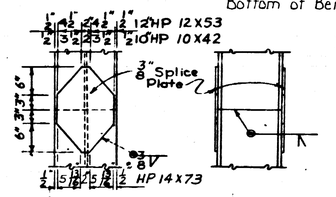

PILE SPLICE DETAIL

1" = 1'-0"

The Contractor may for his convenience and at his own expense provide as many as three splices per pile for steel bearing piling. Minimum spacing between splices shall be 5 feet.

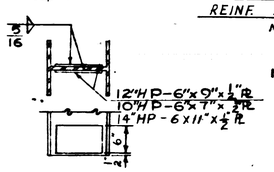

REINFORCING DETAIL FOR STEEL PILE TIP

1" = 1'-0"

Note: Steel Pile Tip Reinforcing will not be paid for directly, but shall be considered subsidiary to the item of "Steel Bearing Piling."

NOTE: Drawing Adapted From Drawing No. 14995, With Detail Drawing Concrete Riprap on Corner Slopes. L.E.G. 2/16/72

Revised 4-21-76 Added HP14X73 Pile. CVA
Revised bracing detail, added encasement details 7-29-77 MCC
Revised encasement dimensions for 12" piles 12-5-77 MCC
Added Encasement & Bracing Notes - 7 May 81 Kdh.
Revised Pile Encasement payment Note. 22 Feb. 82 KMG

DETAILS OF CONCRETE RIPRAP AND MISC. DETAILS OF STEEL PILING

ROUTE SEC.

ARKANSAS STATE HIGHWAY COMMISSION

LITTLE ROCK, ARK.

DRAWN BY: LL DATE: 6-6-68
TRACED BY: DATE:
CHECKED: EMH DATE: 6-21-68
SCALE: NO SCALE

BRIDGE ENGINEER

BRIDGE NO. DRAWING NO. 14995A

DATE REVISED	DATE FILMED	DATE REVISED	DATE FILMED	FED. ROAD NO.	STATE	FED. AID PROJ. NO.	SHEET NO.	TOTAL SHEETS
				6	ARK.			
				JOB NO.				

1 — STD. SPAN DTLS. — 14990H

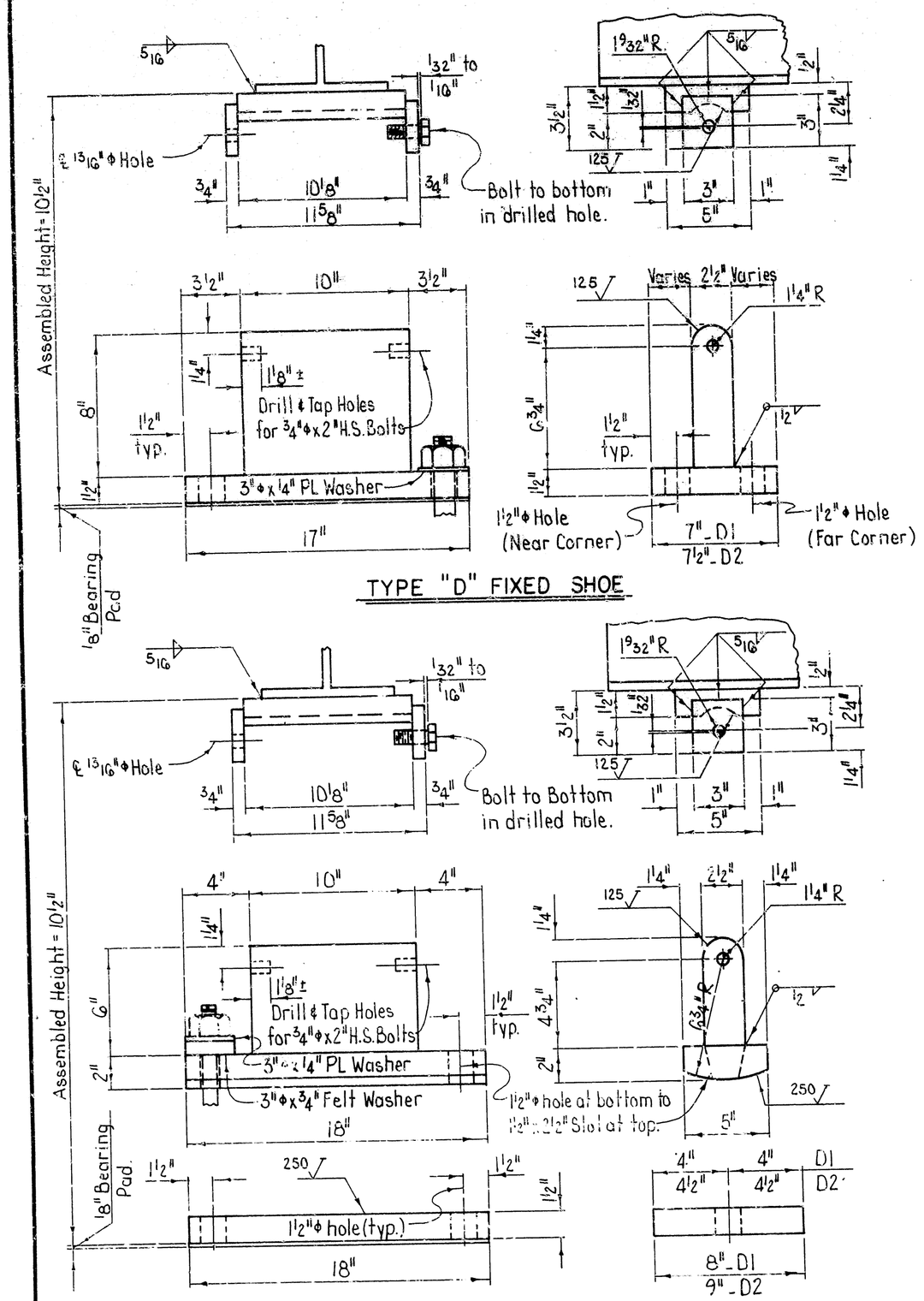

TYPE "D" FIXED SHOE

TYPE D1 FIXED or EXPANSION SHOES: Maximum Load = 100K

TYPE "D" EXPANSION SHOE

TYPE D2 FIXED or EXPANSION SHOES: Maximum Load = 120K

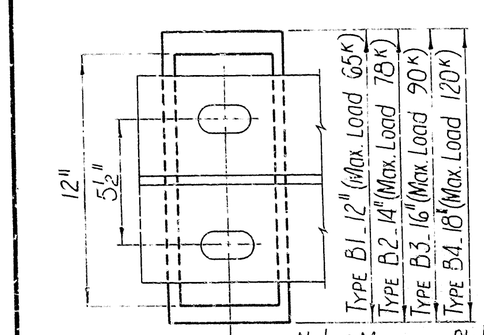

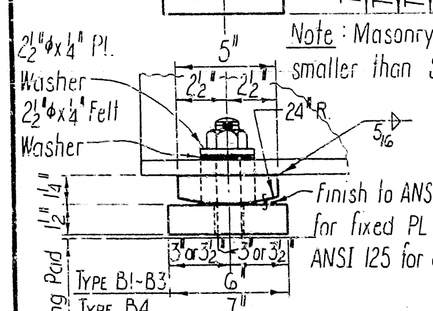

TYPE "B" FIXED OR EXPANSION SHOE

USE FOR END BENTS: ALL SPANS UNLESS OTHERWISE NOTED.
USE FOR INT. BENTS: THRU 60' SPANS UNLESS OTHERWISE NOTED.

Note: Masonry Plates shall not be smaller than Sole Plates.

FIXED SHOE: 1½"ø holes in Sole Plate, Masonry Plate & Beam Flange.

EXPANSION SHOE: 3" x 1½" Slot in Sole Plate & Beam Flange; 1½"ø holes in Masonry Plate.

Note: Shoe Plates may be ASTM A588 Steel. Plates do not require painting if Main Steel is A588. Plate shall be painted when used in place of ASTM A36 Steel.

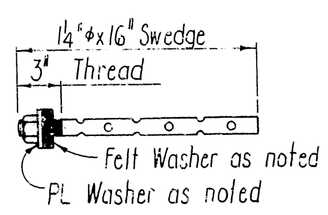

ANCHOR BOLT DETAIL

No Scale

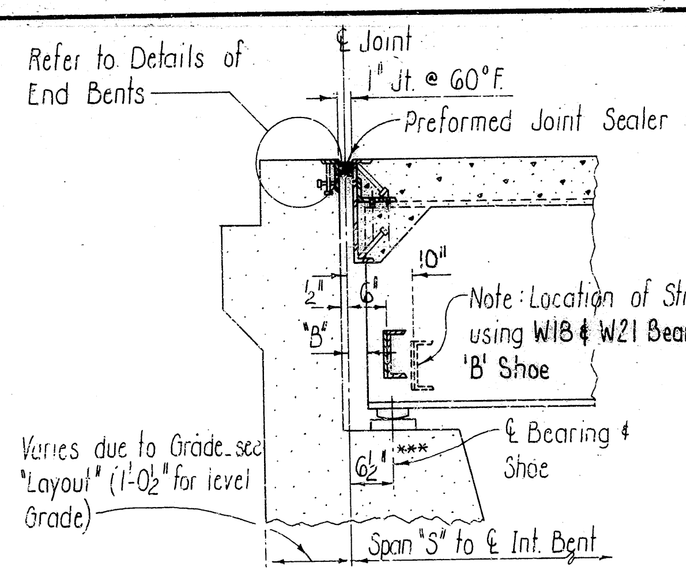

JOINT AT END BENTS

Scale: ¾" = 1'-0"

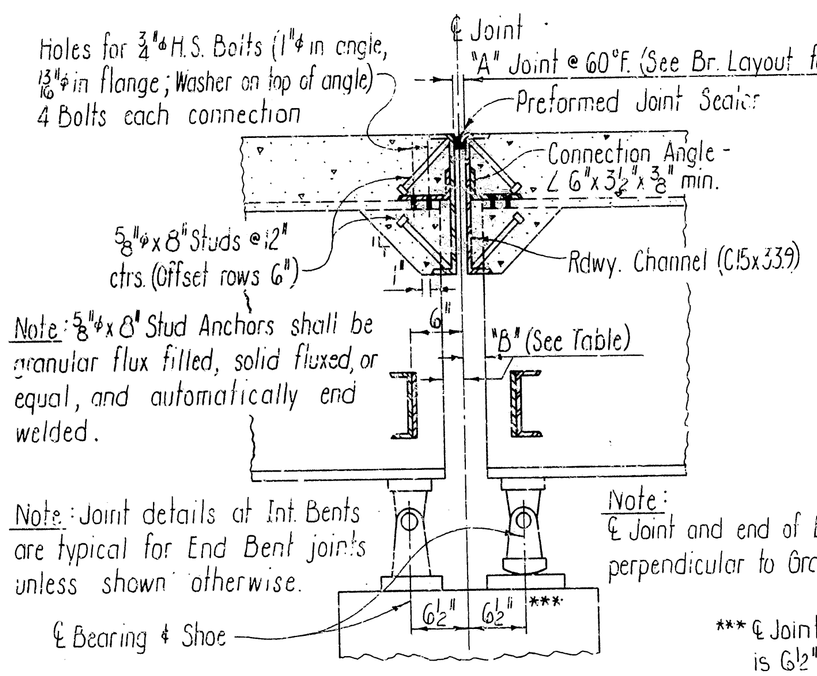

Note: Joint details at Int. Bents are typical for End Bent joints unless shown otherwise.

Note: ℄ Joint and end of Beam perpendicular to Grade.

*** ℄ Joint to ℄ Bearing Dimension is 6½" unless otherwise noted.

JOINT AT INTERMEDIATE BENTS

Scale: 1" = 1'-0"

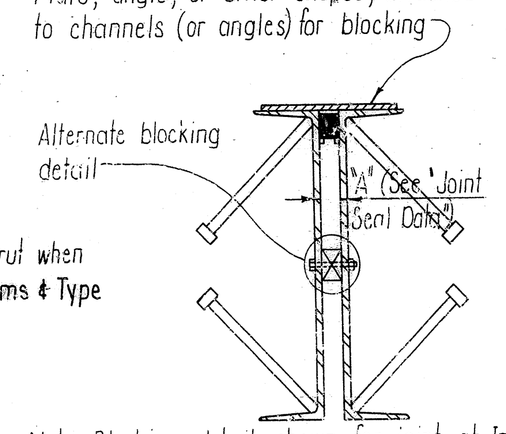

Note: Blocking detail shown for joint at Int. Bent. Joint at End Bent is similar.

DETAILS FOR BLOCKING EXPANSION JOINT DEVICE

Scale: 3/16" = 1"

Note: Each expansion joint device shall be blocked in the shop by the fabricator to the dimension "A", and the blocking details shall be shown on the Shop Drawings. The blocking shall not be removed until pouring of the Slab on one side is complete. Removal shall be just before or after pouring the second side of the joint, as directed by the Engineer.

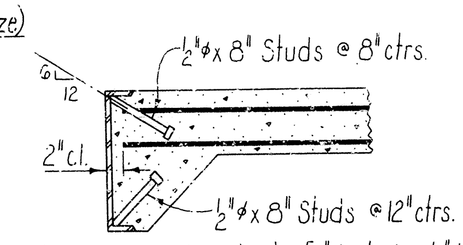

Note: As an alternate to ⅝"ø studs, ½"ø x 8" studs spaced as shown may be used. Studs shall be granular flux filled, solid fluxed, or equal and automatically end welded. Use weight of ⅝"ø studs as basis of measurement of structural steel in anchors.

DETAILS OF ALTERNATE ANCHORS

Scale: 1" = 1'-0"

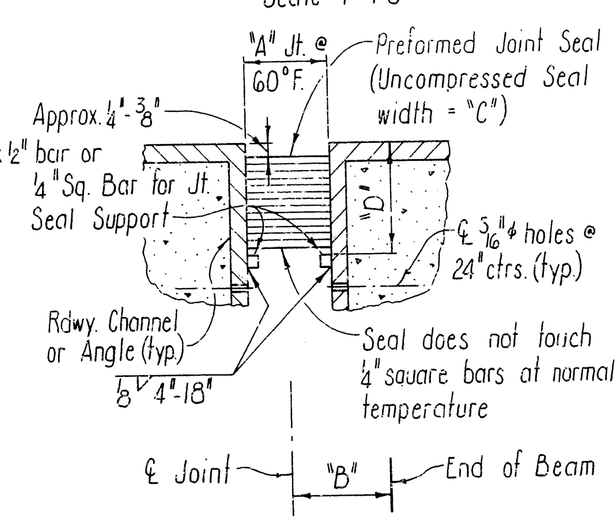

Note: Dimension "D" shall conform to the recommendations of the Seal manufacturer as approved by the Bridge Engineer.

DETAIL OF JOINT SEAL & SUPPORT

No Scale

Note: The Seal shall be in one piece (without splices) for the full width of the joint, except that lengths 55 feet and longer may have a factory made splice. Splices, when required, shall be shown on the Shop Drawings and shall be placed near the high ends of the Roadway. Separation of the splice during installation shall be cause for rejection of the Seal.

JOINT SEAL DATA

"A" (Joint Width Perpendicular to Joint @ 60°F.)*	"B"	"C" (Uncompressed Seal Width)
1"	1¾" ±	1⅝" **
1⅛"	1⅞" ±	1¾"
1⅝"	2⅛" ±	2½"
1⅞"	2¼" ±	3"
2¼"	2⅝" ±	3½"
2⅝"	2⅝" ±	4"

* Installation is limited to 40°F. min. and 80°F. max.

** 1¾" Seal may be used.

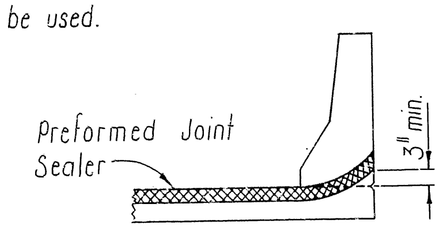

JOINT SEAL PLACEMENT AT CURB

Scale: ½" = 1'-0"

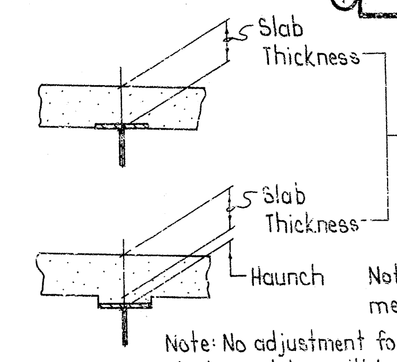

Note: Tolerances for Slab Thickness is minus ¼" and plus 1".

Note: Provide haunch as required to meet slab tolerances.

Note: No adjustment for increase in concrete & structural steel quantities will be made for haunches or any thickening of slab to meet tolerances.

SLAB THICKENING AND/OR HAUNCH DETAIL

GENERAL NOTES

CONCRETE: ALL CONCRETE TO BE CLASS S OR S(AE) AS SHOWN ON THE LAYOUT. ALL EXPOSED CORNERS TO BE CHAMFERED 3/4" UNLESS OTHERWISE NOTED.

CONCRETE SLABS AND SPANS THRU 50 FEET IN LENGTH SHALL BE POURED IN ONE CONTINUOUS OPERATION WITH A STRIKE OFF EXTENDING OVER THE WHOLE SPAN LENGTH. SPANS OVER 50 FEET IN LENGTH MAY BE POURED IN INCREMENTS WITH THE CENTER ONE-THIRD TO ONE-HALF SPAN LENGTH POURED FIRST. AFTER THE CENTER SECTION IS POURED, NOT LESS THAN 72 HOURS SHALL ELAPSE BEFOPE POURING THE END SECTIONS. END SECTIONS MAY BE POURED SIMULTANEOUSLY. IF NOT POURED SIMULTANEOUSLY, 48 HOURS SHALL ELAPSE BETWEEN END SECTION POURS. A MINIMUM OF 72 HOURS SHALL ELAPSE BETWEEN COMPLETION OF THE SLAB AND THE POURING OF THE PARAPET RAILING OR CURB.

REINFORCING STEEL: ALL REINFORCING STEEL SHALL CONFORM TO ASTM A615 OR A617, GRADE 60. THE REINFORCING STEEL IS TO BE ACCURATELY LOCATED IN THE FORMS AND FIRMLY HELD IN PLACE BY STEEL WIRE SUPPORTS, SUFFICIENT IN NUMBER AND SIZE TO PREVENT DISPLACEMENT DURING THE COURSE OF CONSTRUCTION. THE WIRE SUPPORTS WILL NOT BE PAID FOR DIRECTLY BUT WILL BE CONSIDERED SUBSIDIARY TO THE ITEM "REINFORCING STEEL." SHOP LISTS AND BENDING DIAGRAMS OF REINFORCING STEEL, INCLUDING WIRE SUPPORTS, MAY BE SUBMITTED FOR APPROVAL BEFORE FABRICATION IS BEGUN.

STRUCTURAL STEEL: ALL STRUCTURAL STEEL SHALL BE ASTM A36 UNLESS OTHERWISE NOTED.

ALL FIELD CONNECTIONS TO BE BOLTED WITH HIGH STRENGTH BOLTS.

ALL BOLTS TO BE 3/4" ø, WITH 13/16" ø OPEN HOLES, UNLESS OTHERWISE NOTED.

HOLES FOR 3/4" ø BOLTS FOR CONNECTION OF EXPANSION DEVICES, DIAPHRAGMS, AND END STRUTS MAY BE 15/16" ø IF A WASHER IS SUPPLIED FOR USE UNDER BOTH THE NUT AND THE HEAD OF THE BOLT.

STRUCTURAL SHAPES OF EQUAL OR GREATER STRENGTH MAY BE SUBSTITUTED FOR SHAPES SHOWN, BUT PAYMENT WILL BE MADE ON THE BASIS OF SHAPES SHOWN.

UNLESS OTHERWISE NOTED ON SPAN DETAIL DRAWINGS, ALL STRUCTURAL STEEL, EXCEPT SURFACES IN CONTACT WITH CONCRETE, SHALL BE GIVEN ONE SHOP COAT AND TWO FIELD COATS IN ACCORDANCE WITH SECTION 807.59 OF THE SPECIFICATIONS AND APPLICABLE SPECIAL PROVISIONS.

ALL METAL BEARING AND ROADWAY EXPANSION DEVICES TO BE PAID FOR AS "STRUCTURAL STEEL IN BEAM SPANS." BEARINGS SHALL BE FINALLY SEATED IN ACCORDANCE WITH SECTION 807.51 OF THE SPECIFICATIONS. THIS WORK AND MATERIAL ARE TO BE CONSIDERED AS SUBSIDIARY TO THE ITEM "STRUCTURAL STEEL IN BEAM SPANS" AND WILL NOT BE PAID FOR DIRECTLY.

ALL WELDED CONNECTIONS TO BE 5/16" FILLET SHOP WELDS UNLESS NOTED OTHERWISE. ALL WELDING SHALL CONFORM TO THE AMERICAN WELDING SOCIETY STANDARD SPECIFICATIONS FOR WELDED HIGHWAY AND RAILWAY BRIDGES, CURRENT EDITION.

ANCHOR BOLTS SHALL BE GALVANIZED TO CONFORM TO ASTM SPECIFICATIONS, DESIGNATION A153.

DIAPHRAGMS SHALL BE INSTALLED AS BEAMS ARE ERECTED. DIAPHRAGMS SHALL BE INSTALLED AND COMPLETELY BOLTED PRIOR TO POURING OF FLOOR SLABS.

SPECIFICATIONS: ARKANSAS STATE HIGHWAY COMMISSION STANDARD SPECIFICATIONS FOR HIGHWAY CONSTRUCTION, EDITION OF 1978 WITH APPLICABLE SPECIAL PROVISIONS.

THIS DRAWING SHOWS GENERAL FEATURES OF DESIGN ONLY. SHOP DRAWINGS SHALL BE MADE IN ACCORDANCE WITH THE SPECIFICATIONS, SUBMITTED AND APPROVAL SECURED BEFORE FABRICATION IS BEGUN.

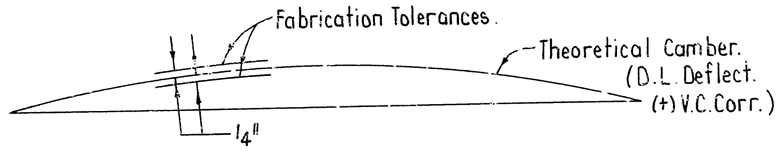

FABRICATION TOLERANCES

No Scale

DETAILS COMMON TO STANDARD COMPOSITE W-BEAM SPANS ALL ROADWAYS

ROUTE SEC.

ARKANSAS STATE HIGHWAY COMMISSION

LITTLE ROCK, ARK.

DRAWN BY: KDH DATE: 21 MAR 86
CHECKED BY: JAS DATE: 25 MAR 86
DESIGNED BY: DATE:
SCALE: 3/16" = 1" or as noted

BRIDGE ENGINEER

BRIDGE NO.

DRAWING NO. 14990H