DATE REVISED	DATE REVISED	FED.RD. DIST.NO.	STATE	JOB NO.	SHEET NO.	TOTAL SHEETS
		6	ARK.	040861	1	291
		HWY. 10 - HWY. 96 (GREENWOOD BYPASS) (S)				

"A PARTIALLY CONTROLLED ACCESS FACILITY"
ARKANSAS DEPARTMENT OF TRANSPORTATION
CONSTRUCTION PLANS FOR STATE HIGHWAY

ARDOT

HWY. 10 - HWY. 96 (GREENWOOD BYPASS) (S)

SEBASTIAN COUNTY

ROUTE 10 SECTIONS 0 & 1

FED. AID PROJ. STPF-9177(10)

JOB 040861

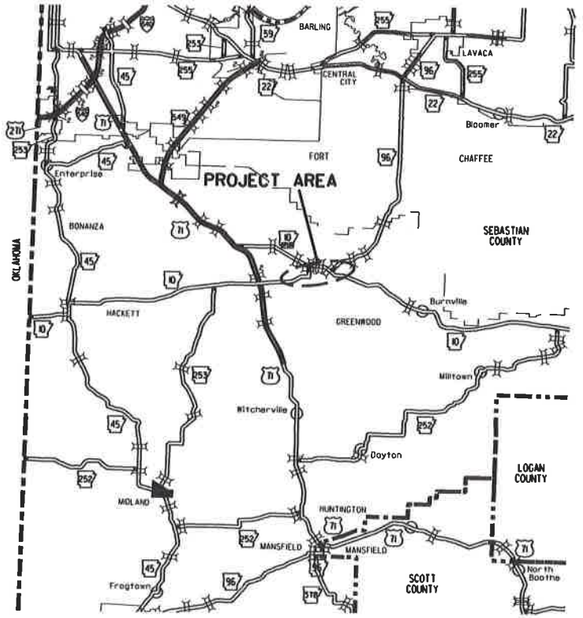

VICINITY MAP

N

HWY. 10 SECTION 1
L.M. 0.000
BEGIN MILL & INLAY

NOT TO SCALE

HWY. 10 SECTION 0
L.M. 11.13
END OVERLAY

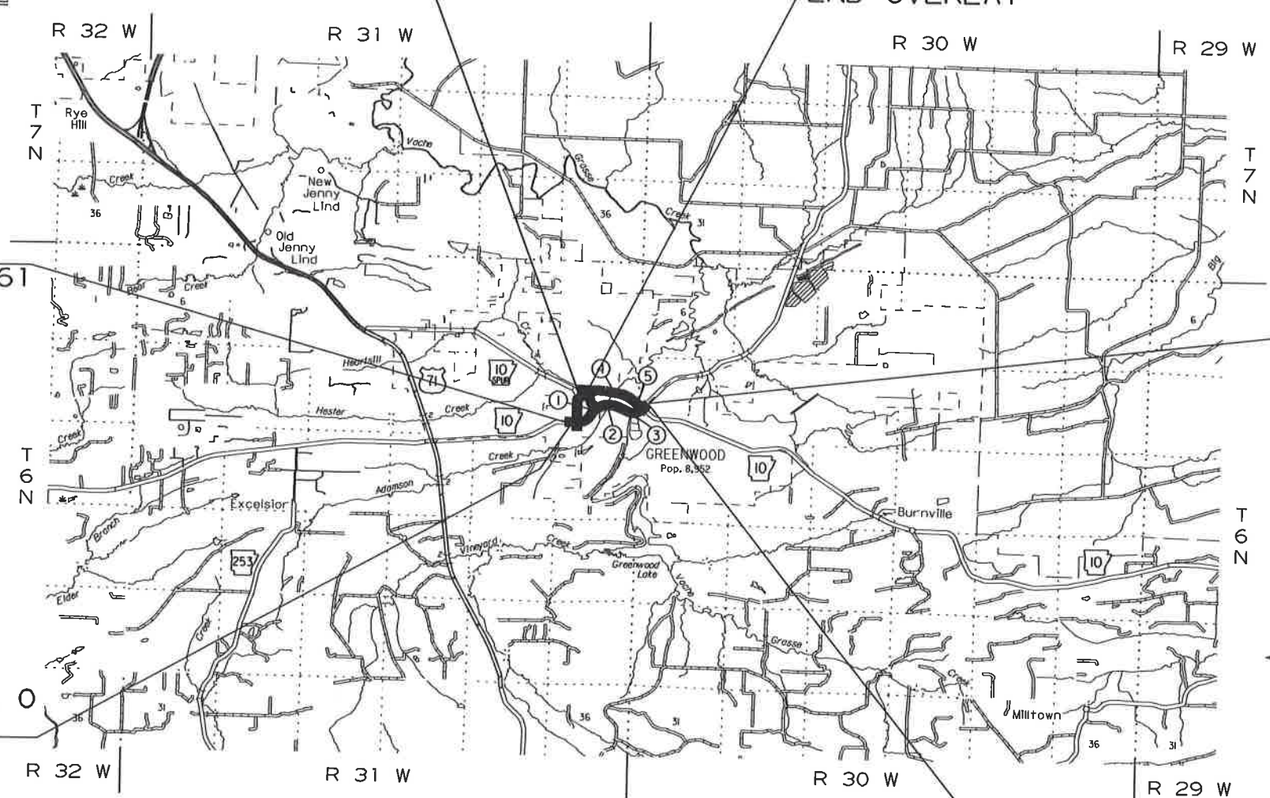

STA. 186+00.00
BEGIN JOB 040861
LOG MILE 10.54

HWY. 10 SECTION 1
L.M. 0.36 =
E CENTER ST. STA. 500+25.00
END MILL& INLAY &
BEGIN 3 LANE CURB AND GUTTER

HWY. 10 SECTION 0
L.M. 10.80
S COKER ST.
STA. 408+63.00
BEGIN OVERLAY

STA. 249+00.00
END JOB 040861

N

ARK. HWY. DIST. NO. 4

BRIDGE DATA

① STA. 207+07.86 BRIDGE END
BRIDGE NO. 07641
58'-0" CLEAR ROADWAY
393'-3⅜" TOTAL LENGTH
391'-0" CONTINUOUS W-BEAM UNIT
(68', 85', 85', 85', 68')
STA. 211+01.14 BRIDGE END

② STA. 219+63.59 BRIDGE END
BRIDGE NO. 07642
58'-0" CLEAR ROADWAY
422'-7⅜" TOTAL LENGTH
420'-0" CONTINUOUS PLATE GIRDER UNIT
(75', 90', 90', 90', 75')
STA. 223+86.19 BRIDGE END

③ STA. 236+53.86 BRIDGE END
BRIDGE NO. 07643
58'-0" CLEAR ROADWAY
275'-3⅜" TOTAL LENGTH
273'-0" CONTINUOUS PLATE GIRDER UNIT
(84', 105', 84')
STA. 239+29.14 BRIDGE END

④ STA. 504+03.86 BRIDGE END
BRIDGE NO. 07644
41'-0" CLEAR ROADWAY
347'-3⅜" TOTAL LENGTH
345'-0" CONTINUOUS W-BEAM UNIT
(60', 75', 75', 75', 60')
STA. 507+51.14 BRIDGE END

⑤ STA. 521+13.86 BRIDGE END
BRIDGE NO. 07645
41'-0" CLEAR ROADWAY
262'-3⅜" TOTAL LENGTH
260'-0" CONTINUOUS PLATE GIRDER UNIT
(80', 100', 80')
STA. 523+76.14 BRIDGE END

DESIGN TRAFFIC DATA

DESIGN YEAR	2043
2023 ADT	5500
2043 ADT	7200
2043 DHV	792
DIRECTIONAL DISTRIBUTION	0.60
TRUCKS	4%
DESIGN SPEED	45 MPH

	BEGIN PROJECT	MID-POINT OF PROJECT	END PROJECT
LATITUDE	N 35°12'25"	N 35°12'38"	N 35°12'39"
LONGITUDE	W 94°15'47"	W 94°15'14"	W 94°14'39"

LENGTH OF PROJECT CALCULATED ALONG C.L.

GROSS LENGTH OF PROJECT	6300.00	FEET	OR	1.193	MILES
NET " " ROADWAY	5208.84	"		0.986	MILES
NET " " BRIDGES	1091.16	"		0.207	MILES
NET " " PROJECT	6300.00	"		1.193	MILES

APPROVED

STATE OF ARKANSAS
LICENSED PROFESSIONAL ENGINEER
No. 14276
JARED D. WILEY

CHIEF ENGINEER - PRECONSTRUCTION

SEP 27 2023

sise641 5/27/2021 11/1/2021
ZBORDER.CEL

INDEX OF SHEETS

SHEET NO.	TITLE	BRIDGE NO.	DRWG.NO.
1	TITLE SHEET		
2	INDEX OF SHEETS		
3	STANDARD DRAWINGS		
4	GOVERNING SPECIFICATIONS AND GENERAL NOTES		
5 - 13	TYPICAL SECTIONS OF IMPROVEMENT		
14 - 17	SPECIAL DETAILS		
18 - 42	TEMPORARY EROSION CONTROL DETAILS		
43 - 64	MAINTENANCE OF TRAFFIC DETAILS		
65 - 73	PERMANENT PAVEMENT MARKING DETAILS		
74 - 84	QUANTITIES		
85	SHEET 1 OF 2 SCHEDULE OF BRIDGE QUANTITIES	7641, 7642, 7643, 7644, 7645	66871
86	SHEET 2 OF 2 SCHEDULE OF BRIDGE QUANTITIES	7641, 7642, 7643, 7644, 7645	66872
87 - 88	SUMMARY OF QUANTITIES AND REVISIONS		
89 - 99	SURVEY CONTROL DETAILS		
100 - 119	PLAN AND PROFILE SHEETS		
120	SUMMARY OF TRAFFIC SIGNAL QUANTITIES		
121	TRAFFIC SIGNAL NOTES		
122	TRAFFIC SIGNAL STREET NAME SIGNS		
123	GROUNDING ARRAY DETAIL		
124	PEDESTRIAN PUSH BUTTON PEDESTAL DETAIL		
125 - 129	SIGNALIZATION PLAN SHEETS		
130 - 131	JUNCTION BOX ELECTRICAL DETAILS		
132	ITS QUANTITY SHEET		
133	COMMON LAYOUT NOTES	7641, 7642, 7643, 7644, 7645	66873
134	SHEET 1 OF 3 LAYOUT OF BRIDGE HIGHWAY 10 OVER HEARTSILL CREEK (SITE 1)	7641	66874
135	SHEET 2 OF 3 LAYOUT OF BRIDGE HIGHWAY 10 OVER HEARTSILL CREEK (SITE 1)	7641	66875
136	SHEET 3 OF 3 LAYOUT OF BRIDGE HIGHWAY 10 OVER HEARTSILL CREEK (SITE 1)	7641	66876
137	SHEET 1 OF 3 DETAILS OF END BENTS	7641	66877
138	SHEET 2 OF 3 DETAILS OF END BENTS	7641	66878
139	SHEET 3 OF 3 DETAILS OF END BENTS	7641	66879
140	DETAILS OF INTERMEDIATE BENTS	7641	66880
141	SHEET 1 OF 4 DETAILS OF 391'-0" CONTINUOUS W-BEAM UNIT	7641	66881
142	SHEET 2 OF 4 DETAILS OF 391'-0" CONTINUOUS W-BEAM UNIT	7641	66882
143	SHEET 3 OF 4 DETAILS OF 391'-0" CONTINUOUS W-BEAM UNIT	7641	66883
144	SHEET 4 OF 4 DETAILS OF 391'-0" CONTINUOUS W-BEAM UNIT	7641	66884
145	SHEET 1 OF 3 LAYOUT OF BRIDGE HIGHWAY 10 OVER HEARTSILL CREEK (SITE 2)	7642	66885
146	SHEET 2 OF 3 LAYOUT OF BRIDGE HIGHWAY 10 OVER HEARTSILL CREEK (SITE 2)	7642	66886
147	SHEET 3 OF 3 LAYOUT OF BRIDGE HIGHWAY 10 OVER HEARTSILL CREEK (SITE 2)	7642	66887
148	SHEET 1 OF 3 DETAILS OF END BENTS	7642	66888
149	SHEET 2 OF 3 DETAILS OF END BENTS	7642	66889
150	SHEET 3 OF 3 DETAILS OF END BENTS	7642	66890
151	DETAILS OF INTERMEDIATE BENTS	7642	66891
152	SHEET 1 OF 6 DETAILS OF 420'-0" CONTINUOUS PLATE GIRDER UNIT	7642	66892
153	SHEET 2 OF 6 DETAILS OF 420'-0" CONTINUOUS PLATE GIRDER UNIT	7642	66893
154	SHEET 3 OF 6 DETAILS OF 420'-0" CONTINUOUS PLATE GIRDER UNIT	7642	66894
155	SHEET 4 OF 6 DETAILS OF 420'-0" CONTINUOUS PLATE GIRDER UNIT	7642	66895
156	SHEET 5 OF 6 DETAILS OF 420'-0" CONTINUOUS PLATE GIRDER UNIT	7642	66896
157	SHEET 6 OF 6 DETAILS OF 420'-0" CONTINUOUS PLATE GIRDER UNIT	7642	66897
158	SHEET 1 OF 2 LAYOUT OF BRIDGE HIGHWAY 10 OVER VACHE GRASSE CREEK (SITE 3)	7643	66898
159	SHEET 2 OF 2 LAYOUT OF BRIDGE HIGHWAY 10 OVER VACHE GRASSE CREEK (SITE 3)	7643	66899
160	SHEET 1 OF 3 DETAILS OF END BENTS	7643	66900
161	SHEET 2 OF 3 DETAILS OF END BENTS	7643	66901
162	SHEET 3 OF 3 DETAILS OF END BENTS	7643	66902
163	DETAILS OF INTERMEDIATE BENTS	7643	66903
164	SHEET 1 OF 6 DETAILS OF 273'-0" CONTINUOUS PLATE GIRDER UNIT	7643	66904
165	SHEET 2 OF 6 DETAILS OF 273'-0" CONTINUOUS PLATE GIRDER UNIT	7643	66905
166	SHEET 3 OF 6 DETAILS OF 273'-0" CONTINUOUS PLATE GIRDER UNIT	7643	66906
167	SHEET 4 OF 6 DETAILS OF 273'-0" CONTINUOUS PLATE GIRDER UNIT	7643	66907
168	SHEET 5 OF 6 DETAILS OF 273'-0" CONTINUOUS PLATE GIRDER UNIT	7643	66908
169	SHEET 6 OF 6 DETAILS OF 273'-0" CONTINUOUS PLATE GIRDER UNIT	7643	66909
170	SHEET 1 OF 4 LAYOUT OF BRIDGE HIGHWAY 10 OVER HEARTSILL CREEK (SITE 4)	7644	66910
171	SHEET 2 OF 4 LAYOUT OF BRIDGE HIGHWAY 10 OVER HEARTSILL CREEK (SITE 4)	7644	66911
172	SHEET 3 OF 4 LAYOUT OF BRIDGE HIGHWAY 10 OVER HEARTSILL CREEK (SITE 4)	7644	66912
173	SHEET 4 OF 4 LAYOUT OF BRIDGE HIGHWAY 10 OVER HEARTSILL CREEK (SITE 4)	7644	66913
174	SHEET 1 OF 4 DETAILS OF END BENTS	7644	66914
175	SHEET 2 OF 4 DETAILS OF END BENTS	7644	66915
176	SHEET 3 OF 4 DETAILS OF END BENTS	7644	66916
177	SHEET 4 OF 4 DETAILS OF END BENTS	7644	66917
178	DETAILS OF INTERMEDIATE BENTS	7644	66918
179	SHEET 1 OF 6 DETAILS OF 345'-0" CONTINUOUS PLATE GIRDER UNIT	7644	66919
180	SHEET 2 OF 6 DETAILS OF 345'-0" CONTINUOUS PLATE GIRDER UNIT	7644	66920
181	SHEET 3 OF 6 DETAILS OF 345'-0" CONTINUOUS PLATE GIRDER UNIT	7644	66921
182	SHEET 4 OF 6 DETAILS OF 345'-0" CONTINUOUS PLATE GIRDER UNIT	7644	66922
183	SHEET 5 OF 6 DETAILS OF 345'-0" CONTINUOUS PLATE GIRDER UNIT	7644	66923
184	SHEET 6 OF 6 DETAILS OF 345'-0" CONTINUOUS PLATE GIRDER UNIT	7644	66924
185	SHEET 1 OF 3 LAYOUT OF BRIDGE HIGHWAY 10 OVER VACHE GRASSE CREEK (SITE 5)	7645	66925
186	SHEET 2 OF 3 LAYOUT OF BRIDGE HIGHWAY 10 OVER VACHE GRASSE CREEK (SITE 5)	7645	66926
187	SHEET 3 OF 3 LAYOUT OF BRIDGE HIGHWAY 10 OVER VACHE GRASSE CREEK (SITE 5)	7645	66927
188	SHEET 1 OF 4 DETAILS OF END BENTS	7645	66928
189	SHEET 2 OF 4 DETAILS OF END BENTS	7645	66929
190	SHEET 3 OF 4 DETAILS OF END BENTS	7645	66930
191	SHEET 4 OF 4 DETAILS OF END BENTS	7645	66931
192	DETAILS OF INTERMEDIATE BENTS	7645	66932
193	SHEET 1 OF 6 DETAILS OF 260'-0" CONTINUOUS PLATE GIRDER UNIT	7645	66933
194	SHEET 2 OF 6 DETAILS OF 260'-0" CONTINUOUS PLATE GIRDER UNIT	7645	66934
195	SHEET 3 OF 6 DETAILS OF 260'-0" CONTINUOUS PLATE GIRDER UNIT	7645	66935
196	SHEET 4 OF 6 DETAILS OF 260'-0" CONTINUOUS PLATE GIRDER UNIT	7645	66936
197	SHEET 5 OF 6 DETAILS OF 260'-0" CONTINUOUS PLATE GIRDER UNIT	7645	66937
198	SHEET 6 OF 6 DETAILS OF 260'-0" CONTINUOUS PLATE GIRDER UNIT	7645	66938
199	SHEET 1 OF 4 COMMON DETAILS OF END BENTS	7641, 7642, 7643, 7644, 7645	66939
200	SHEET 2 OF 4 COMMON DETAILS OF END BENTS	7641, 7642, 7643, 7644, 7645	66940
201	SHEET 3 OF 4 COMMON DETAILS OF END BENTS	7641, 7642, 7643, 7644, 7645	66941
202	SHEET 4 OF 4 COMMON DETAILS OF END BENTS	7641, 7642, 7643, 7644, 7645	66942
203	COMMON DETAILS OF INTERMEDIATE BENTS	7641, 7642, 7643, 7644, 7645	66943
204	DETAILS FOR STEEL H-PILES AND PILE ENCASEMENTS	7641, 7642, 7643, 7644, 7645	66944
205	SHEET 1 OF 2 DETAILS OF ELASTOMERIC BEARINGS	7641, 7642, 7643, 7644, 7645	66945
206	SHEET 2 OF 2 DETAILS OF ELASTOMERIC BEARINGS	7641, 7642, 7643, 7644, 7645	66946
207	SHEET 1 OF 2 COMMON DETAILS OF CONTINUOUS PLATE GIRDER & W-BEAM UNITS	7641, 7642, 7643, 7644, 7645	66947
208	SHEET 2 OF 2 COMMON DETAILS OF CONTINUOUS PLATE GIRDER & W-BEAM UNITS	7644, 7645	66948
209	DETAILS FOR TYPE H3 RAILING	7641, 7642, 7643, 7644, 7645	66949
210	DETAILS FOR TYPE H4 RAILING	7641, 7642, 7643, 7644, 7645	66950
211	DETAILS OF TRANSITIONAL APPROACH RAILING (SHARED USE PATH)	7641, 7642, 7643, 7644, 7645	66951
212	DETAILS FOR TYPE SPECIAL APPROACH GUTTERS	7641, 7642, 7643, 7644, 7645	66952
213 - 291	CROSS SECTIONS		

NOTE: CROSS SECTIONS NOT NORMALLY INCLUDED IN PLANS SOLD TO PROSPECTIVE BIDDERS, BUT MAY BE HAD UPON REQUEST.

STATE OF ARKANSAS LICENSED PROFESSIONAL ENGINEER No. 11485 TRINITY R. SMITH

Digitally signed by Trinity Smith
Date: 2023.09.27 16:16:04-05'00'

DATE REVISED	DATE REVISED

INDEX OF SHEETS

FED.RD. DIST.NO.	STATE	JOB NO.	SHEET NO.	TOTAL SHEETS
6	ARK.	040861	2	291

INDEX OF SHEETS

DATE REVISED	DATE REVISED	FED.RD. DIST.NO.	STATE	JOB NO.	SHEET NO.	TOTAL SHEETS
10-24-2023		6	ARK.	040861	3	291
		STANDARD DRAWINGS				

STATE OF ARKANSAS
LICENSED PROFESSIONAL ENGINEER
No. 11425
TRINITY D. SMITH

Digitally signed by Trinity Smith
Date: 2023.10.25 10:58:36-05'00'

ROADWAY STANDARD DRAWINGS

DRWG.NO.	TITLE	DATE
CDP-1	CONCRETE DITCH PAVING	12-08-16
CG-1	CURBING DETAILS	11-29-07
CPTJ-6A	TRANSVERSE & LONGITUDINAL JOINTS FOR CONCRETE PAVEMENT (NON-REINFORCED)	11-07-19
DR-1	DETAILS OF DRIVEWAYS & ISLANDS	05-19-22
DR-2	DETAILS OF DRIVEWAYS & STREET TURNOUTS	05-19-22
DR-3	DETAILS OF DRIVEWAYS & STREET TURNOUTS (PAVEMENT PRESERVATION)	04-13-23
FES-1	FLARED END SECTION	10-18-96
FES-2	FLARED END SECTION	10-18-96
FPC-9	DETAILS OF DROP INLETS & JUNCTION BOXES	11-16-01
FPC-9E	DETAILS OF DROP INLETS (TYPE C)	08-22-02
FPC-9M	DETAILS OF DROP INLET (TYPE MO)	08-22-02
MB-1	MAILBOX DETAILS	11-18-04
PCC-1	CONCRETE PIPE CULVERT FILL HEIGHTS & BEDDING	02-27-14
PCM-1	METAL PIPE CULVERT FILL HEIGHTS & BEDDING	02-27-14
PCP-1	PLASTIC PIPE CULVERT (HIGH DENSITY POLYETHYLENE)	02-27-14
PCP-2	PLASTIC PIPE CULVERT (PVC F949)	02-27-14
PCP-3	PLASTIC PIPE CULVERT (POLYPROPYLENE)	02-27-20
PM-1	PAVEMENT MARKING DETAILS	02-27-20
SD-5	CONTROLLER CABINET UTILITY DRAWER	09-12-13
SD-6	HEAVY DUTY PULL BOX	11-16-17
SD-8	SIGNAL HEAD PLACEMENT	12-08-16
SD-9	SERVICE POINT	11-07-19
SD-11	STEEL POLE WITH MAST ARM	11-16-17
SE-3	TABLES AND METHOD OF SUPERELEVATION FOR TWO-WAY TRAFFIC (4% MAXIMUM)	11-07-19
SI-1	DETAILS OF SPECIAL ITEMS	11-05-20
SI-2	REINFORCED CONCRETE RETAINING WALL (WITHOUT LIVE LOAD SURCHARGE)	05-14-20
SI-3	CONCRETE WALK (TYPE SPECIAL)	11-05-20
TC-1	STANDARD TRAFFIC CONTROLS FOR HIGHWAY CONSTRUCTION	11-07-19
TC-2	STANDARD TRAFFIC CONTROLS FOR HIGHWAY CONSTRUCTION	05-20-21
TC-3	STANDARD TRAFFIC CONTROLS FOR HIGHWAY CONSTRUCTION	08-12-21
TEC-1	TEMPORARY EROSION CONTROL DEVICES	11-16-17
TEC-2	TEMPORARY EROSION CONTROL DEVICES	06-02-94
TEC-3	TEMPORARY EROSION CONTROL DEVICES	11-03-94
WF-1	WIRE FENCE TYPE A AND B	08-22-02
WR-1	WHEELCHAIR RAMPS NEW CONSTRUCTION AND ALTERATIONS	11-10-05

BRIDGE STANDARD DRAWINGS

DRWG.NO.	TITLE	DATE
55000	STANDARD DETAILS FOR EMBANKMENT CONSTRUCTION AND BACKFILL AT BRIDGE ENDS	02-27-14
55001	STANDARD DETAILS FOR DUMPED RIPRAP AND FILTER BLANKET AND COMPUTING EXCAVATION FOR STRUCTURES	02-27-14
55002	STANDARD DETAILS FOR CONCRETE RIPRAP	02-27-14
55005	STANDARD DETAILS FOR PERMANENT STEEL BRIDGE DECK FORMS FOR STEEL & CONCRETE GIRDER SPANS	03-24-16
55006	STANDARD GENERAL NOTES FOR STEEL BRIDGE STRUCTURES	09-02-15
55007	STANDARD DETAILS FOR STEEL BRIDGE STRUCTURES	02-11-16
55008	STANDARD DETAILS FOR POURED SILICONE JOINTS	02-11-16
55010	STANDARD DETAILS FOR TYPE D BRIDGE NAME PLATE	05-11-21
55013A	STANDARD DETAILS FOR TRANSITIONAL APPROACH RAILING TYPE SSTR36	04-08-21
55015	STANDARD DETAILS FOR TYPE H2 RAILING	06-25-20
55040F1	STANDARD DETAILS FOR TYPE F1 APPROACH SLAB	09-07-23
55070	STANDARD DETAILS FOR BRIDGE TRAFFIC RAIL TYPE SSTR36	11-05-20

GOVERNING SPECIFICATIONS

ARKANSAS STATE HIGHWAY COMMISSION STANDARD SPECIFICATIONS FOR HIGHWAY CONSTRUCTION, EDITION OF 2014, AND THE FOLLOWING SPECIAL PROVISIONS AND SUPPLEMENTAL SPECIFICATIONS:

NUMBER	TITLE
ERRATA_____	ERRATA FOR THE BOOK OF STANDARD SPECIFICATIONS
FHWA-1273__	REQUIRED CONTRACT PROVISIONS FEDERAL-AID CONSTRUCTION CONTRACTS
FHWA-1273__	SUPPLEMENT - EQUAL EMPLOYMENT OPPORTUNITY - NOTICE TO CONTRACTORS
FHWA-1273__	SUPPLEMENT - SPECIFIC EQUAL EMPLOYMENT OPPORTUNITY RESPONSIBILITIES (23 U.S.C. 140)
FHWA-1273__	SUPPLEMENT - EQUAL EMPLOYMENT OPPORTUNITY - GOALS AND TIMETABLES
FHWA-1273__	SUPPLEMENT - EQUAL EMPLOYMENT OPPORTUNITY - FEDERAL STANDARDS
FHWA-1273__	SUPPLEMENT - POSTERS AND NOTICES REQUIRED FOR FEDERAL-AID PROJECTS
FHWA-1273__	SUPPLEMENT - WAGE RATE DETERMINATION
FHWA-1273__	SUPPLEMENT - TRAINING PROGRAM - JOB 040861
100-3_____	CONTRACTOR'S LICENSE
100-4_____	DEPARTMENT NAME CHANGE
102-2_____	ISSUANCE OF PROPOSALS
105-4_____	MAINTENANCE DURING CONSTRUCTION
107-2_____	RESTRAINING CONDITIONS
108-1_____	LIQUIDATED DAMAGES
108-2_____	WORK ALLOWED PRIOR TO ISSUANCE OF WORK ORDER
110-1_____	PROTECTION OF WATER QUALITY AND WETLANDS
210-1_____	UNCLASSIFIED EXCAVATION
303-1_____	AGGREGATE BASE COURSE
306-1_____	QUALITY CONTROL AND ACCEPTANCE
307-1_____	CEMENT
308-1_____	CEMENT
400-1_____	TACK COATS
400-4_____	DESIGN AND QUALITY CONTROL OF ASPHALT MIXTURES
400-5_____	PERCENT AIR VOIDS FOR ACHM MIX DESIGNS
400-6_____	LIQUID ANTI-STRIP ADDITIVE
400-7_____	TRACKLESS TACK
404-3_____	DESIGN OF ASPHALT MIXTURES
409-2_____	ASPHALT LABORATORY FACILITY
410-1_____	CONSTRUCTION REQUIREMENTS AND ACCEPTANCE OF ASPHALT CONCRETE PLANT MIX COURSES
410-2_____	DEVICES FOR MEASURING DENSITY FOR ROLLING PATTERNS
410-4_____	EVALUATION OF ACHM SUBLOT REPLACEMENT MATERIAL
416-1_____	RECYCLED ASPHALT PAVEMENT
501-2_____	CEMENT
502-1_____	WELDED WIRE REINFORCEMENT
600-2_____	INCIDENTAL CONSTRUCTION
603-1_____	LANE CLOSURE NOTIFICATION
604-1_____	RETROREFLECTIVE SHEETING FOR TRAFFIC CONTROL DEVICES IN CONSTRUCTION ZONES
604-3_____	TRAFFIC CONTROL DEVICES IN CONSTRUCTION ZONES (MASH)
605-1_____	CONCRETE DITCH PAVING
606-1_____	PIPE CULVERTS FOR SIDE DRAINS
620-1_____	MULCH COVER
621-1_____	FILTER SOCKS
632-1_____	CONCRETE ISLAND
633-1_____	CONCRETE WALKS, CONCRETE STEPS, AND HAND RAILING
634-1_____	CURBING
700-2_____	TRAFFIC CONTROL FACILITIES
800-1_____	STRUCTURES
802-3_____	CONCRETE FOR STRUCTURES
802-4_____	CEMENT
804-2_____	REINFORCING STEEL FOR STRUCTURES
807-2_____	STEEL STRUCTURES
808-1_____	INSTALLATION OF ELASTOMERIC BEARINGS
808-2_____	ELASTOMERIC BEARINGS
JOB 040861__	ACCESSIBLE PEDESTRIAN SIGNAL (APS)
JOB 040861__	ACTUATED CONTROLLER
JOB 040861__	ARCHITECTURAL FINISH
JOB 040861__	ARCHITECTURAL FINISH (CAST-IN PLACE RETAINING WALLS)
JOB 040861__	BIDDING REQUIREMENTS AND CONDITIONS
JOB 040861__	BROADBAND INTERNET SERVICE FOR ASPHALT CONCRETE PLANT
JOB 040861__	BROADBAND INTERNET SERVICE FOR FIELD OFFICE
JOB 040861__	BUY AMERICA - CONSTRUCTION MATERIALS
JOB 040861__	CABINET DRAWER ASSEMBLY
JOB 040861__	CARGO PREFERENCE ACT REQUIREMENTS
JOB 040861__	CLASS C FLY ASH IN PORTLAND CEMENT CONCRETE PAVEMENT AND CLASS S(AE) CONCRETE
JOB 040861__	COLD MILLING – COUNTY PROPERTY
JOB 040861__	CONCRETE BRIDGE DECK CURING AND SURFACE TREATMENT RESTRICTIONS
JOB 040861__	CONSTRUCTION IN SPECIAL FLOOD HAZARD AREAS
JOB 040861__	CONSTRUCTION PROJECT INFORMATION SIGN
JOB 040861__	CONTACT INFORMATION FOR MOTORIST DAMAGE CLAIMS
JOB 040861__	DELAY IN RIGHT OF WAY OCCUPANCY
JOB 040861__	DESIGN AND QUALITY CONTROL ASPHALT MIXTURES
JOB 040861__	DESIGN OF ASPHALT MIXTURES - AGGREGATES
JOB 040861__	DIRECT TENSION INDICATORS FOR HIGH STRENGTH BOLT ASSEMBLIES
JOB 040861__	DISADVANTAGED BUSINESS ENTERPRISE BIDDER'S RESPONSIBILITIES
JOB 040861__	DRIVEN PILING BY METHOD A
JOB 040861__	ELECTRICAL CONDUCTORS FOR LUMINAIRES
JOB 040861__	ELECTRICAL CONDUCTORS-IN-CONDUIT

GOVERNING SPECIFICATIONS - CONTINUED

JOB 040861__ FLEXIBLE BEGINNING OF WORK – CALENDAR DAY CONTRACT
JOB 040861__ GEOTEXTILE FABRIC
JOB 040861__ GOALS FOR DISADVANTAGED BUSINESS ENTERPRISE PARTICIPATION
JOB 040861__ HYBRID VIDEO/RADAR DETECTION SYSTEM
JOB 040861__ LED COUNTDOWN PEDESTRIAN SIGNAL HEAD
JOB 040861__ LED LUMINAIRE ASSEMBLY (BUG U0 TYPE)
JOB 040861__ LED TRAFFIC SIGNAL HEAD
JOB 040861__ LIQUIDATED DAMAGES PROCEDURE FOR BID LETTINGS
JOB 040861__ LONGITUDINAL JOINT DENSITIES FOR ACHM SURFACE COURSES
JOB 040861__ LONGITUDINAL TINING
JOB 040861__ MAINTENANCE OF TRAFFIC
JOB 040861__ MANDATORY ELECTRONIC CONTRACT
JOB 040861__ MANDATORY ELECTRONIC DOCUMENT SUBMITTAL
JOB 040861__ NEMA 4X STAINLESS STEEL JUNCTION BOX
JOB 040861__ NESTING SITES OF MIGRATORY BIRDS
JOB 040861__ NON-AGITATING CONCRETE TRANSPORT
JOB 040861__ OFF-SITE RESTRAINING CONDITIONS FOR INDIANA AND NORTHERN LONG-EARED BATS
JOB 040861__ PARTNERING REQUIREMENTS
JOB 040861__ PCC PAVEMENT SURFACE SMOOTHNESS (IRI)
JOB 040861__ PERCENT WITHIN LIMITS/PAVEMENT SMOOTHNESS (IRI)
JOB 040861__ PLASTIC PIPE
JOB 040861__ PRE-BID ON SITE INVESTIGATION OF SOIL CONDITIONS
JOB 040861__ PRICE ADJUSTMENT FOR ASPHALT BINDER
JOB 040861__ PRICE ADJUSTMENT FOR FUEL
JOB 040861__ PROHIBITION OF CERTAIN TELECOMMUNICATIONS AND VIDEO SURVEILLANCE SERVICES OR EQUIPMENT
JOB 040861__ PROSECUTION AND PROGRESS WITH BID SCHEDULE
JOB 040861__ REACTIVE AGGREGATE TESTING
JOB 040861__ RETROREFLECTIVE BACKPLATES
JOB 040861__ ROCK FILL
JOB 040861__ SECTION 404 LETTER OF PERMISSION REQUIREMENTS
JOB 040861__ SERVICE POINT ASSEMBLY (TRAFFIC CONTROL DEVICES)
JOB 040861__ SHORING FOR CULVERTS
JOB 040861__ SITE USE (A+C METHOD) – CALENDAR DAY CONTRACT
JOB 040861__ SOIL STABILIZATION
JOB 040861__ SPECIAL CLEARING REQUIREMENTS
JOB 040861__ STREET NAME SIGN (MAST ARM MOUNTED)
JOB 040861__ STORM WATER POLLUTION PREVENTION PLAN
JOB 040861__ SUBMISSION OF ASPHALT CONCRETE HOT MIX ACCEPTANCE TEST RESULTS
JOB 040861__ TEXTURED COATING FINISH
JOB 040861__ TEXTURED COATING FINISH (CAST-IN PLACE RETAINING WALLS)
JOB 040861__ TOTAL SOLAR ECLIPSE
JOB 040861__ UTILITY ADJUSTMENTS
JOB 040861__ VALUE ENGINEERING
JOB 040861__ WARM MIX ASPHALT
JOB 040861__ WATER POLLUTION CONTROL

GENERAL NOTES

1. GRADE LINE DENOTES FINISHED GRADE WHERE SHOWN ON PLANS.
2. ALL PIPE LINES, POWER, TELEPHONE, AND TELEGRAPH LINES TO BE MOVED OR LOWERED BY THE RESPECTIVE OWNERS AS PER AGREEMENT WITH SUCH OWNERS.
3. ANY EQUIPMENT OR APPURTENANCE THAT INTERFERES WITH THE PROPOSED CONSTRUCTION AND WHICH MAY BE THE PROPERTY OF UTILITY SERVICE ORGANIZATIONS SHALL BE MOVED BY THE OWNERS UNLESS OTHERWISE PROVIDED.
4. THE CONTRACTOR SHALL BE RESPONSIBLE FOR MAINTAINING U. S. MAILBOXES WITHIN THE PROJECT LIMITS IN SUCH A MANNER THAT THE PUBLIC MAY RECEIVE CONTINUED MAIL SERVICE. PAYMENT WILL BE CONSIDERED INCLUDED IN THE PRICE BID FOR THE VARIOUS BID ITEMS.
5. ALL LAND MONUMENTS LOCATED WITHIN THE CONSTRUCTION AREA SHALL BE PROTECTED IN ACCORDANCE WITH SECTION 107.12 OF THE STANDARD SPECIFICATIONS.
6. ALL TREES THAT DO NOT DIRECTLY INTERFERE WITH THE PROPOSED CONSTRUCTION SHALL BE SPARED AS DIRECTED BY THE ENGINEER. CARE AND DISCRETION SHALL BE USED TO ENSURE THAT ALL TREES NOT TO BE REMOVED SHALL BE HARMED AS LITTLE AS POSSIBLE DURING THE CONSTRUCTION OPERATIONS.
7. THE CONTRACTOR SHALL BE RESPONSIBLE FOR PROVIDING A FENCE TO CONTROL LIVESTOCK IN AREAS WHERE PASTURES ARE SEVERED. WIRE FENCE MAY BE CONSTRUCTED INITIALLY, OR IN LIEU THEREOF, THE CONTRACTOR AT HIS OWN EXPENSE, MAY ELECT TO PROVIDE TEMPORARY FENCING SUITABLE TO CONTAIN LIVESTOCK.
8. THE SEQUENCE AS SHOWN ON THE MAINTENANCE OF TRAFFIC PLANS IS A GENERAL OUTLINE FOR THE CONSTRUCTION OF THIS PROJECT, AND IN NO WAY IS IT INTENDED TO COVER EVERY ITEM IN THE PROJECT. ITEMS NOT CRITICAL TO THE CONSTRUCTION SEQUENCE MAY BE CONSTRUCTED IN ANY STAGE AS APPROVED BY THE RESIDENT ENGINEER.
9. ALL FLEXIBLE BASE AND ASPHALTIC PAVEMENTS REMOVED SHALL BE PAID FOR UNDER THE ITEM NO. 210 - UNCLASSIFIED EXCAVATION.
10. THE EXISTING ASPHALT PAVEMENT TO BE REMOVED FROM THE REMAINING PAVEMENT SHALL BE SEPARATED BY SAWING ALONG A NEAT LINE. AFTER SAWING, THE PAVEMENT TO BE REMOVED SHALL BE CAREFULLY REMOVED IN A MANNER THAT WILL NOT DAMAGE THE PAVEMENT THAT IS TO REMAIN. ANY DAMAGE OF THE ASPHALT PAVEMENT THAT IS TO REMAIN IN PLACE SHALL BE REPAIRED AT THE CONTRACTOR'S EXPENSE.

STATE OF ARKANSAS LICENSED PROFESSIONAL ENGINEER No. 11425 TRINITY D. SMITH

Trinity Smith

Digitally signed by Trinity Smith
Date: 2023.10.25 12:09:45-05'00'

GOVERNING SPECIFICATIONS AND GENERAL NOTES

DATE REVISED	DATE REVISED	FED.RD. DIST.NO.	STATE	JOB NO.	SHEET NO.	TOTAL SHEETS
10-24-2023		6	ARK.	040861	5	291
		TYPICAL SECTIONS OF IMPROVEMENT				

STATE OF ARKANSAS
LICENSED PROFESSIONAL ENGINEER
No. 11425
TRINITY D. SMITH

10-25-2023

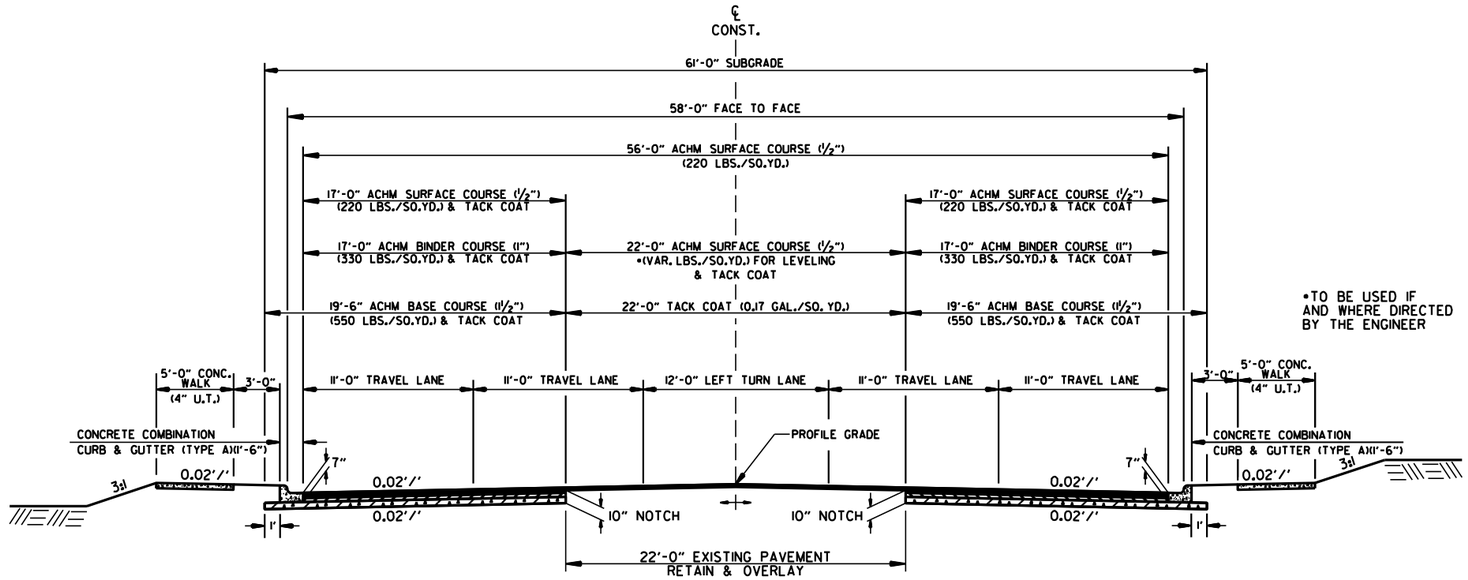

HWY. 10 - NOTCH, WIDEN, AND OVERLAY SECTION
STA. 186+00.00 - STA. 190+04.60
STA. 248+03.86 - STA. 249+00.00

NOTES:

REFER TO CROSS SECTIONS FOR DEVIATION FROM THE NORMAL SLOPES. NO CHANGES SHALL BE MADE FROM THE PLANNED SLOPES WITHOUT THE APPROVAL OF THE ENGINEER.

ASPHALT FOR LEVELING OF EXISTING PAVEMENT SHALL BE PLACED ONLY IF AND WHERE DIRECTED BY THE ENGINEER. CALCULATIONS FOR THE AMOUNT OF LEVELING AND LEVELING OPERATIONS SHALL BE PERFORMED BEFORE CONSTRUCTING NOTCH AND WIDENING. CALCULATIONS WILL NOT BE PAID FOR DIRECTLY BUT PAYMENT WILL BE CONSIDERED INCLUDED IN THE VARIOUS PAY ITEMS.

THE FINAL 2" OF SURFACE COURSE IS TO BE PLACED AFTER ALL OTHER COURSES HAVE BEEN LAID. LONGITUDINAL JOINTS SHALL BE AT LANE LINES.

PRIOR TO AND DURING PLACEMENT OF PAVEMENT IN FRONT OF THE CURB AND GUTTER, THE CONTRACTOR SHALL PROVIDE POSITIVE DRAINAGE AT ALL TIMES. THE METHOD(S) USED SHALL BE APPROVED BY THE ENGINEER. PAYMENT FOR THIS WORK SHALL BE CONSIDERED INCLUDED IN THE PRICE BID FOR THE VARIOUS CONTRACT ITEMS.

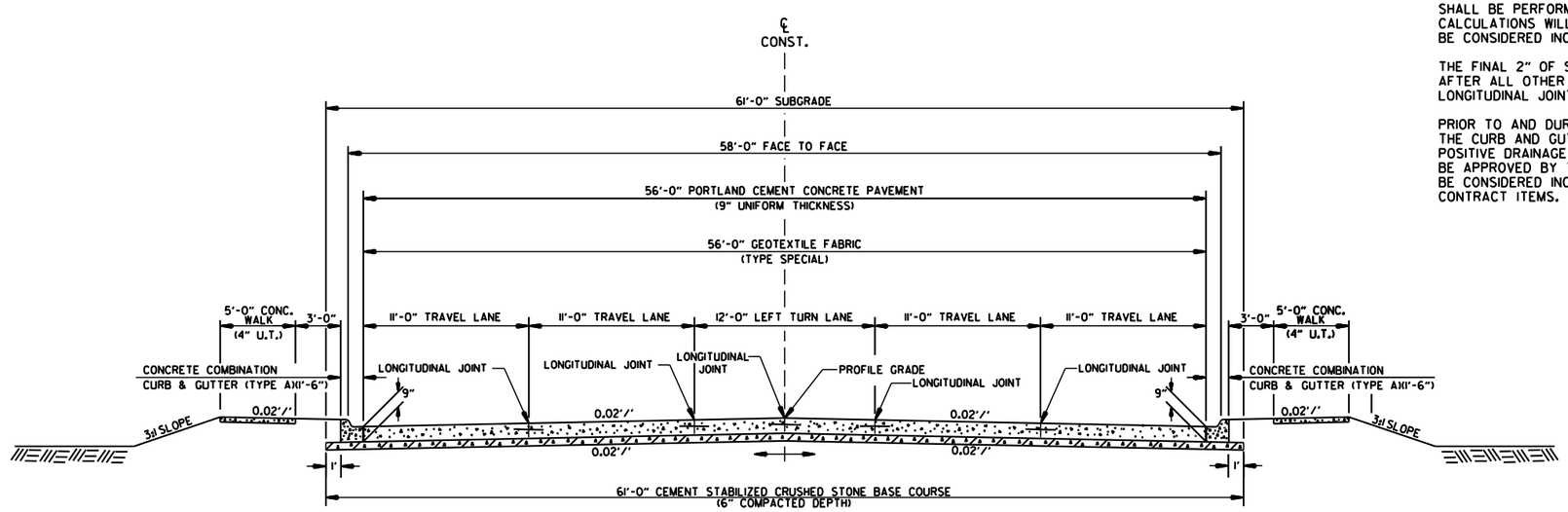

HWY. 10 - FULL DEPTH
STA. 206+57.74 - STA. 206+72.86
STA. 211+36.14 - STA. 211+95.00
STA. 231+26.89 - STA. 234+63.00

TYPICAL SECTIONS OF IMPROVEMENT

er42959 12/3/2021
R040861.DGN

DATE REVISED	DATE REVISED	FED.RD. DIST.NO.	STATE	JOB NO.	SHEET NO.	TOTAL SHEETS
10-24-2023		6	ARK.	040861	6	291
		TYPICAL SECTIONS OF IMPROVEMENT				

STATE OF ARKANSAS
LICENSED PROFESSIONAL ENGINEER
No. 11425
TRINITY D. SMITH

10-25-2023

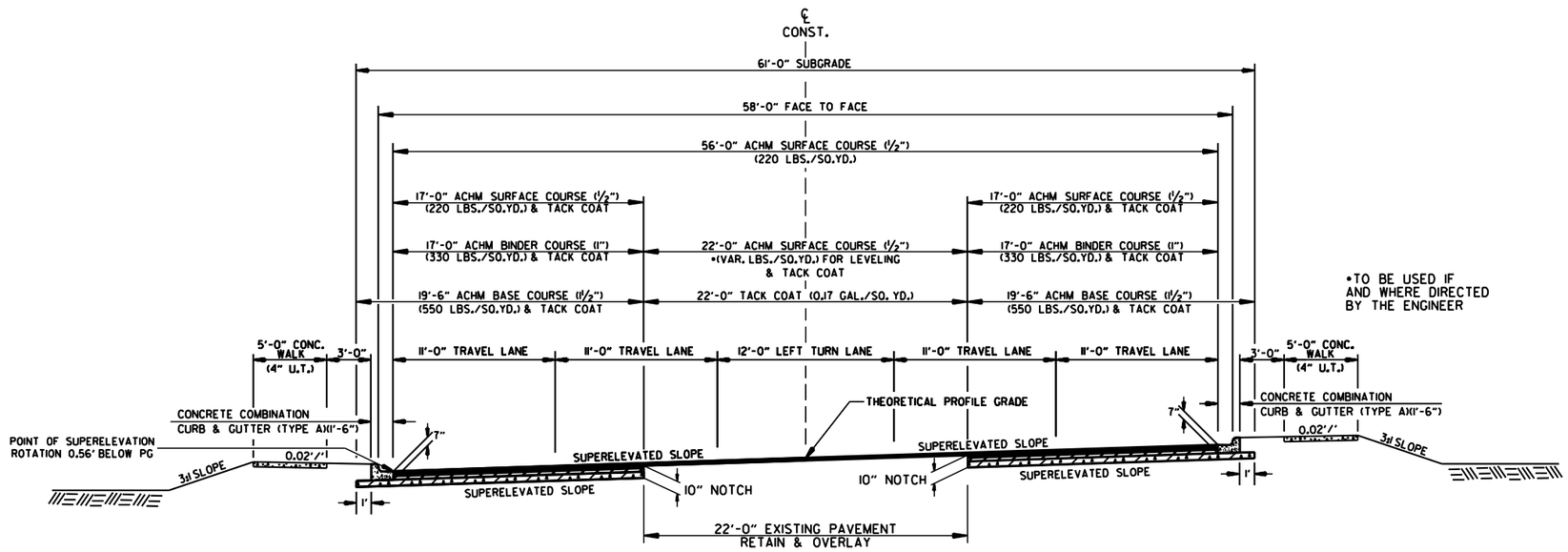

HWY. 10 - NOTCH AND WIDEN SUPERELEVATED
STA. 190+04.60 - STA. 193+70.00
STA. 244+70.00 - STA. 248+03.86

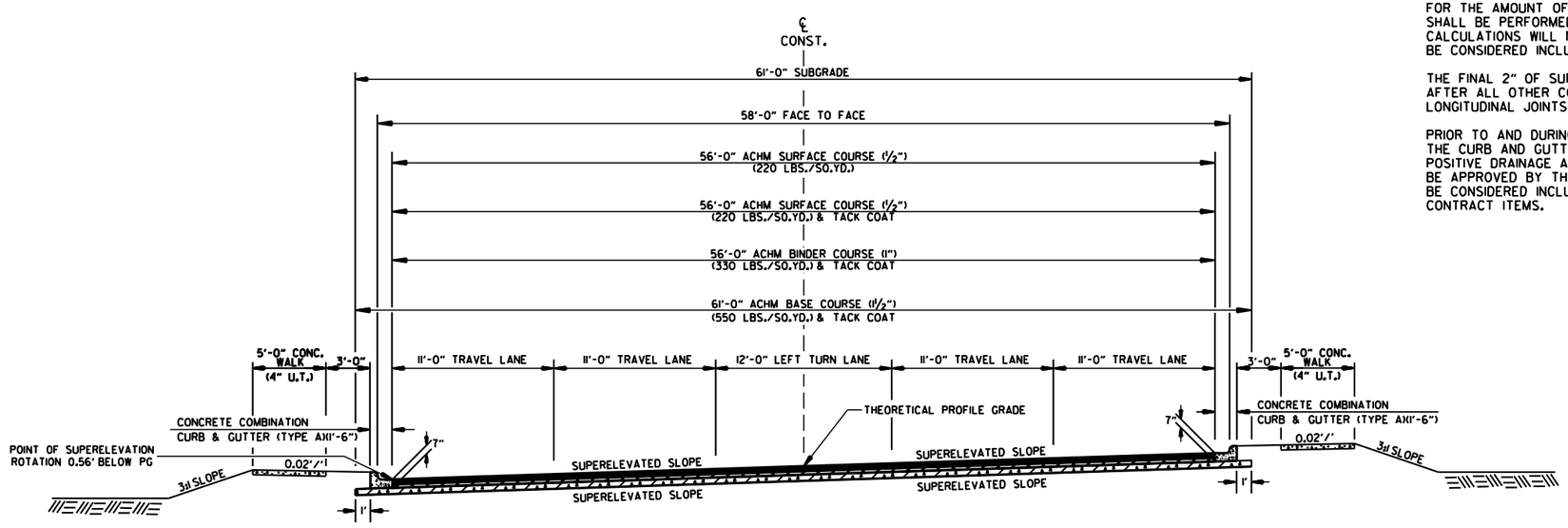

HWY. 10 - FULL DEPTH SUPERELEVATED
STA. 193+70.00 - STA. 197+33.56
STA. 240+60.00 - STA. 244+70.00

NOTES:

REFER TO CROSS SECTIONS FOR DEVIATION FROM THE NORMAL SLOPES. NO CHANGES SHALL BE MADE FROM THE PLANNED SLOPES WITHOUT THE APPROVAL OF THE ENGINEER.

ASPHALT FOR LEVELING OF EXISTING PAVEMENT SHALL BE PLACED ONLY IF AND WHERE DIRECTED BY THE ENGINEER. CALCULATIONS FOR THE AMOUNT OF LEVELING AND LEVELING OPERATIONS SHALL BE PERFORMED BEFORE CONSTRUCTING NOTCH AND WIDENING. CALCULATIONS WILL NOT BE PAID FOR DIRECTLY BUT PAYMENT WILL BE CONSIDERED INCLUDED IN THE VARIOUS PAY ITEMS.

THE FINAL 2" OF SURFACE COURSE IS TO BE PLACED AFTER ALL OTHER COURSES HAVE BEEN LAID. LONGITUDINAL JOINTS SHALL BE AT LANE LINES.

PRIOR TO AND DURING PLACEMENT OF PAVEMENT IN FRONT OF THE CURB AND GUTTER, THE CONTRACTOR SHALL PROVIDE POSITIVE DRAINAGE AT ALL TIMES. THE METHOD(S) USED SHALL BE APPROVED BY THE ENGINEER. PAYMENT FOR THIS WORK SHALL BE CONSIDERED INCLUDED IN THE PRICE BID FOR THE VARIOUS CONTRACT ITEMS.

er42959 12/3/2021
R040861.DGN

TYPICAL SECTIONS OF IMPROVEMENT

DATE REVISED	DATE REVISED	FED.RD. DIST.NO.	STATE	JOB NO.	SHEET NO.	TOTAL SHEETS
10-24-2023		6	ARK.	040861	7	291
		TYPICAL SECTIONS OF IMPROVEMENT				

STATE OF ARKANSAS
LICENSED PROFESSIONAL ENGINEER
No. 11425
TRINITY D. SMITH

10-25-2023

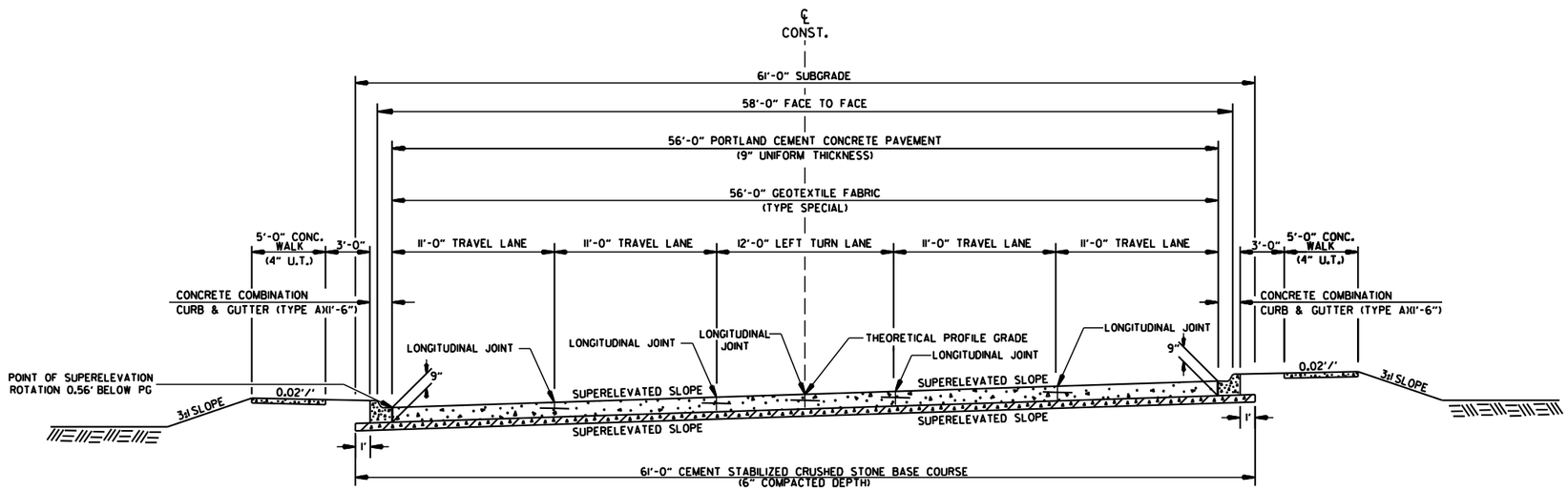

HWY. 10 - FULL DEPTH SUPERELEVATED
STA. 197+33.56 - STA. 206+57.74
STA. 211+95.00 - STA. 219+28.59
STA. 224+21.19 - STA. 231+26.89
STA. 234+63.00 - STA. 236+18.86
STA. 239+64.14 - STA. 240+60.00

NOTES:

REFER TO CROSS SECTIONS FOR DEVIATION FROM THE NORMAL SLOPES. NO CHANGES SHALL BE MADE FROM THE PLANNED SLOPES WITHOUT THE APPROVAL OF THE ENGINEER.

ASPHALT FOR LEVELING OF EXISTING PAVEMENT SHALL BE PLACED ONLY IF AND WHERE DIRECTED BY THE ENGINEER. CALCULATIONS FOR THE AMOUNT OF LEVELING AND LEVELING OPERATIONS SHALL BE PERFORMED BEFORE CONSTRUCTING NOTCH AND WIDENING. CALCULATIONS WILL NOT BE PAID FOR DIRECTLY BUT PAYMENT WILL BE CONSIDERED INCLUDED IN THE VARIOUS PAY ITEMS.

THE FINAL 2" OF SURFACE COURSE IS TO BE PLACED AFTER ALL OTHER COURSES HAVE BEEN LAID. LONGITUDINAL JOINTS SHALL BE AT LANE LINES.

PRIOR TO AND DURING PLACEMENT OF PAVEMENT IN FRONT OF THE CURB AND GUTTER, THE CONTRACTOR SHALL PROVIDE POSITIVE DRAINAGE AT ALL TIMES. THE METHOD(S) USED SHALL BE APPROVED BY THE ENGINEER. PAYMENT FOR THIS WORK SHALL BE CONSIDERED INCLUDED IN THE PRICE BID FOR THE VARIOUS CONTRACT ITEMS.

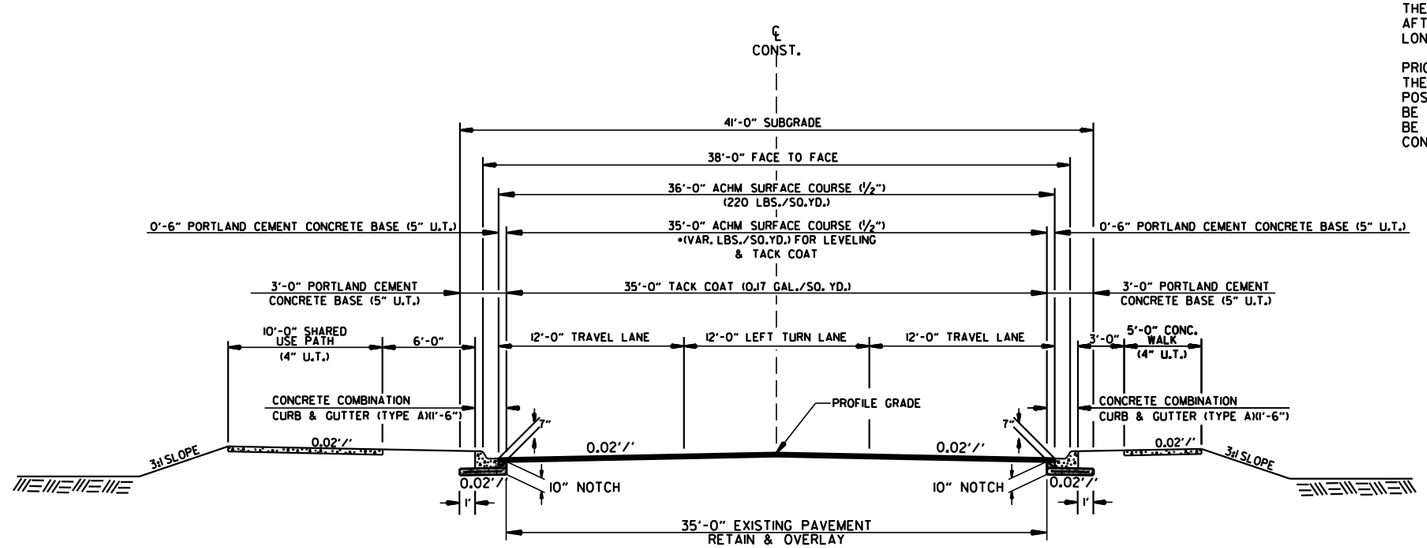

E. CENTER ST. - NOTCH AND WIDEN
STA. 500+25.00 - STA. 501+51.00

er42959 12/3/2021
RD40861.DGN

TYPICAL SECTIONS OF IMPROVEMENT

DATE REVISED	DATE REVISED	FED.RD. DIST.NO.	STATE	JOB NO.	SHEET NO.	TOTAL SHEETS
10-24-2023		6	ARK.	040861	8	291
10-30-2023		TYPICAL SECTIONS OF IMPROVEMENT				

STATE OF ARKANSAS
LICENSED PROFESSIONAL ENGINEER
No. 11425
TRINITY D. SMITH

Digitally signed by Trinity Smith
Date: 2023.10.30 12:35:37-05'00'

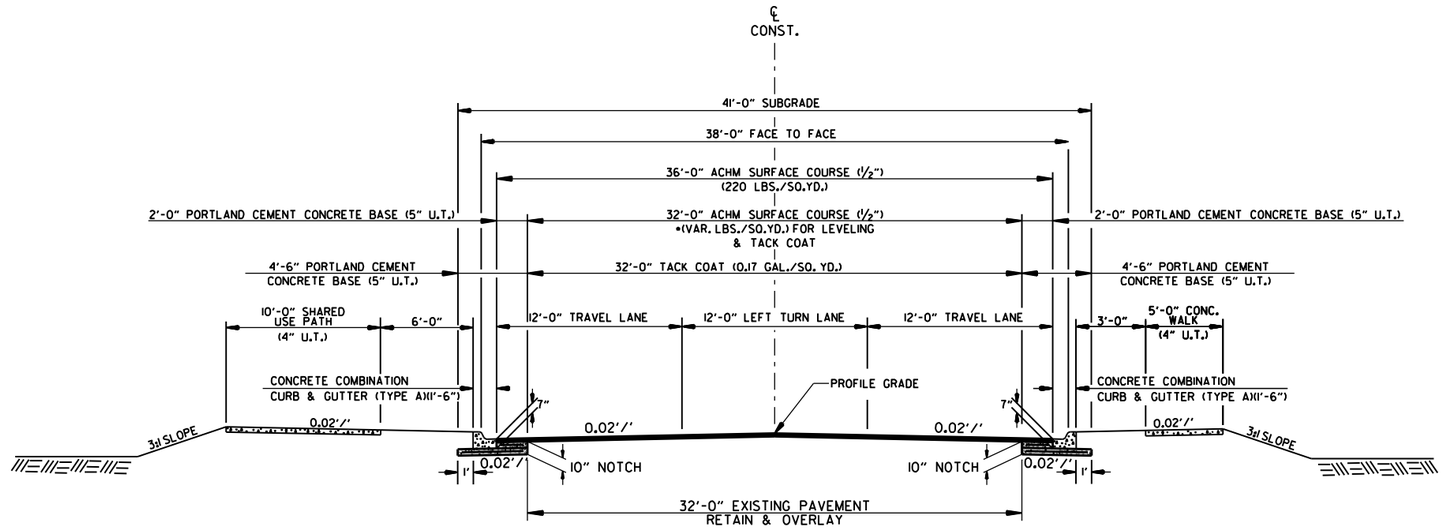

E. CENTER ST. - NOTCH AND WIDEN
STA. 501+51.00 - STA. 502+33.00
STA. 529+10.34 - STA. 530+55.00

NOTES:

REFER TO CROSS SECTIONS FOR DEVIATION FROM THE NORMAL SLOPES. NO CHANGES SHALL BE MADE FROM THE PLANNED SLOPES WITHOUT THE APPROVAL OF THE ENGINEER.

ASPHALT FOR LEVELING OF EXISTING PAVEMENT SHALL BE PLACED ONLY IF AND WHERE DIRECTED BY THE ENGINEER. CALCULATIONS FOR THE AMOUNT OF LEVELING AND LEVELING OPERATIONS SHALL BE PERFORMED BEFORE CONSTRUCTING NOTCH AND WIDENING. CALCULATIONS WILL NOT BE PAID FOR DIRECTLY BUT PAYMENT WILL BE CONSIDERED INCLUDED IN THE VARIOUS PAY ITEMS.

THE FINAL 2" OF SURFACE COURSE IS TO BE PLACED AFTER ALL OTHER COURSES HAVE BEEN LAID. LONGITUDINAL JOINTS SHALL BE AT LANE LINES.

PRIOR TO AND DURING PLACEMENT OF PAVEMENT IN FRONT OF THE CURB AND GUTTER, THE CONTRACTOR SHALL PROVIDE POSITIVE DRAINAGE AT ALL TIMES. THE METHOD(S) USED SHALL BE APPROVED BY THE ENGINEER. PAYMENT FOR THIS WORK SHALL BE CONSIDERED INCLUDED IN THE PRICE BID FOR THE VARIOUS CONTRACT ITEMS.

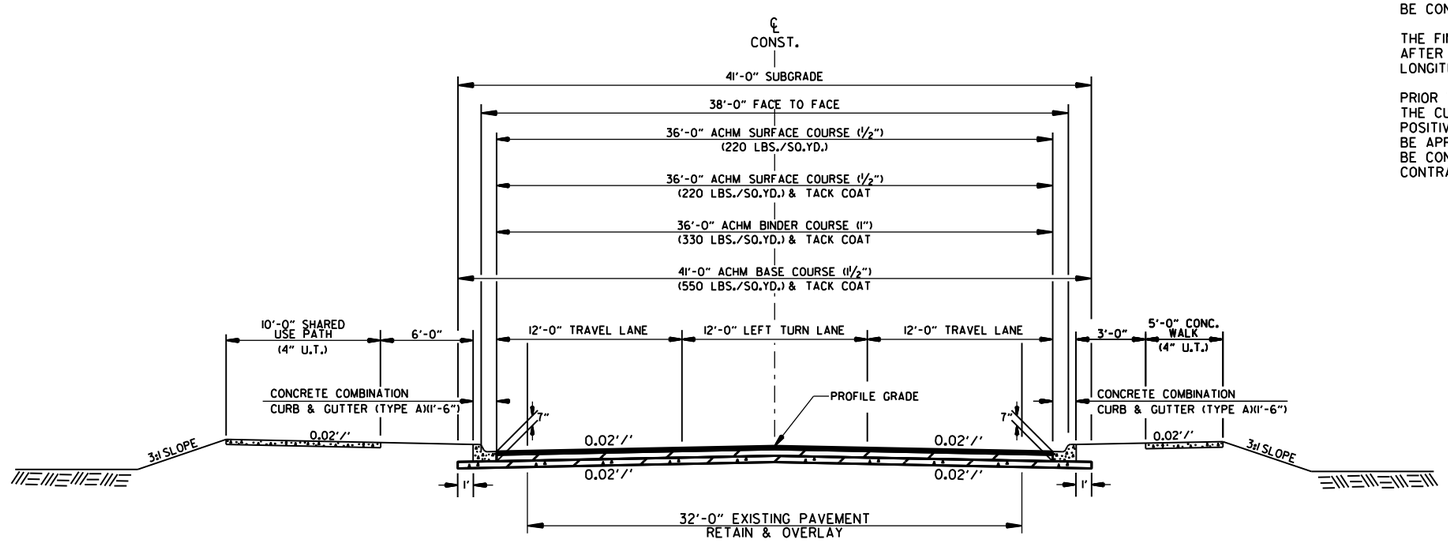

E. CENTER ST. - FULL DEPTH
STA. 502+33.00 - STA. 504+03.86
STA. 507+51.14 - STA. 508+09.03
STA. 517+25.49 - STA. 519+30.00
STA. 525+60.00 - STA. 526+35.25

TYPICAL SECTIONS OF IMPROVEMENT

er42959 12/3/2021
R040861.DGN

DATE REVISED	DATE REVISED	FED.RD. DIST.NO.	STATE	JOB NO.	SHEET NO.	TOTAL SHEETS
10-24-2023		6	ARK.	040861	9	291
10-30-2023		TYPICAL SECTIONS OF IMPROVEMENT				

STATE OF ARKANSAS
LICENSED PROFESSIONAL ENGINEER
No. 11425
TRINITY D. SMITH

10-30-2023

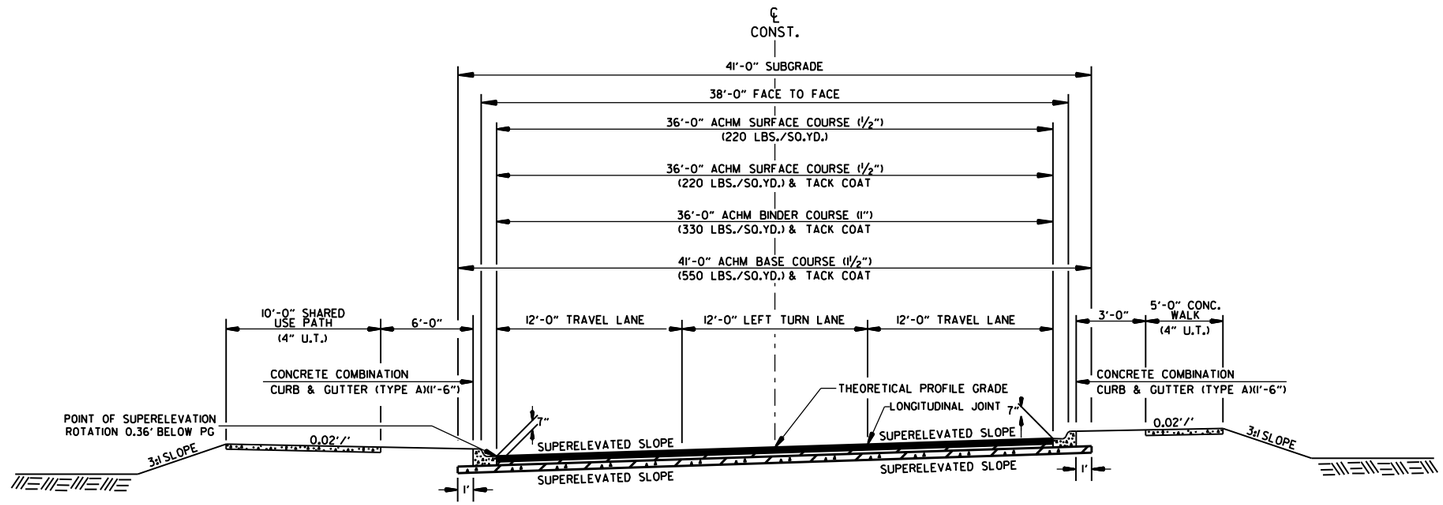

E. CENTER ST. - FULL DEPTH SUPERELEVATED
STA. 508+09.03 - STA. 517+25.49
STA. 519+30.00 - STA. 521+13.86
STA. 523+76.14 - STA. 525+60.00

NOTES:

REFER TO CROSS SECTIONS FOR DEVIATION FROM THE NORMAL SLOPES. NO CHANGES SHALL BE MADE FROM THE PLANNED SLOPES WITHOUT THE APPROVAL OF THE ENGINEER.

ASPHALT FOR LEVELING OF EXISTING PAVEMENT SHALL BE PLACED ONLY IF AND WHERE DIRECTED BY THE ENGINEER. CALCULATIONS FOR THE AMOUNT OF LEVELING AND LEVELING OPERATIONS SHALL BE PERFORMED BEFORE CONSTRUCTING NOTCH AND WIDENING. CALCULATIONS WILL NOT BE PAID FOR DIRECTLY BUT PAYMENT WILL BE CONSIDERED INCLUDED IN THE VARIOUS PAY ITEMS.

THE FINAL 2" OF SURFACE COURSE IS TO BE PLACED AFTER ALL OTHER COURSES HAVE BEEN LAID. LONGITUDINAL JOINTS SHALL BE AT LANE LINES.

PRIOR TO AND DURING PLACEMENT OF PAVEMENT IN FRONT OF THE CURB AND GUTTER, THE CONTRACTOR SHALL PROVIDE POSITIVE DRAINAGE AT ALL TIMES. THE METHOD(S) USED SHALL BE APPROVED BY THE ENGINEER. PAYMENT FOR THIS WORK SHALL BE CONSIDERED INCLUDED IN THE PRICE BID FOR THE VARIOUS CONTRACT ITEMS.

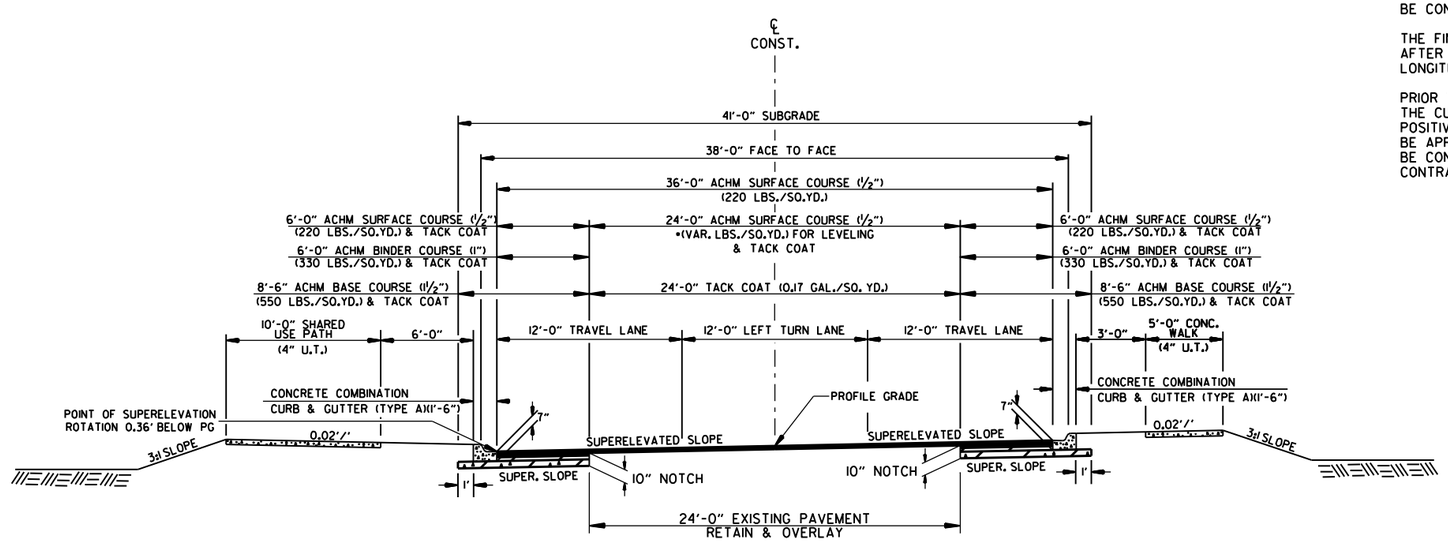

E. CENTER ST. - NOTCH AND WIDEN SUPERELEVATED
STA. 527+30.34 - STA. 529+10.34

er42959 12/3/2021
R040861.DGN

TYPICAL SECTIONS OF IMPROVEMENT

DATE REVISED	DATE REVISED	FED.RD. DIST.NO.	STATE	JOB NO.	SHEET NO.	TOTAL SHEETS
10-24-2023		6	ARK.	040861	10	291
10-30-2023		TYPICAL SECTIONS OF IMPROVEMENT				

STATE OF ARKANSAS LICENSED PROFESSIONAL ENGINEER No. 11425 TRINITY D. SMITH

Trinity D. Smith

10-30-2023

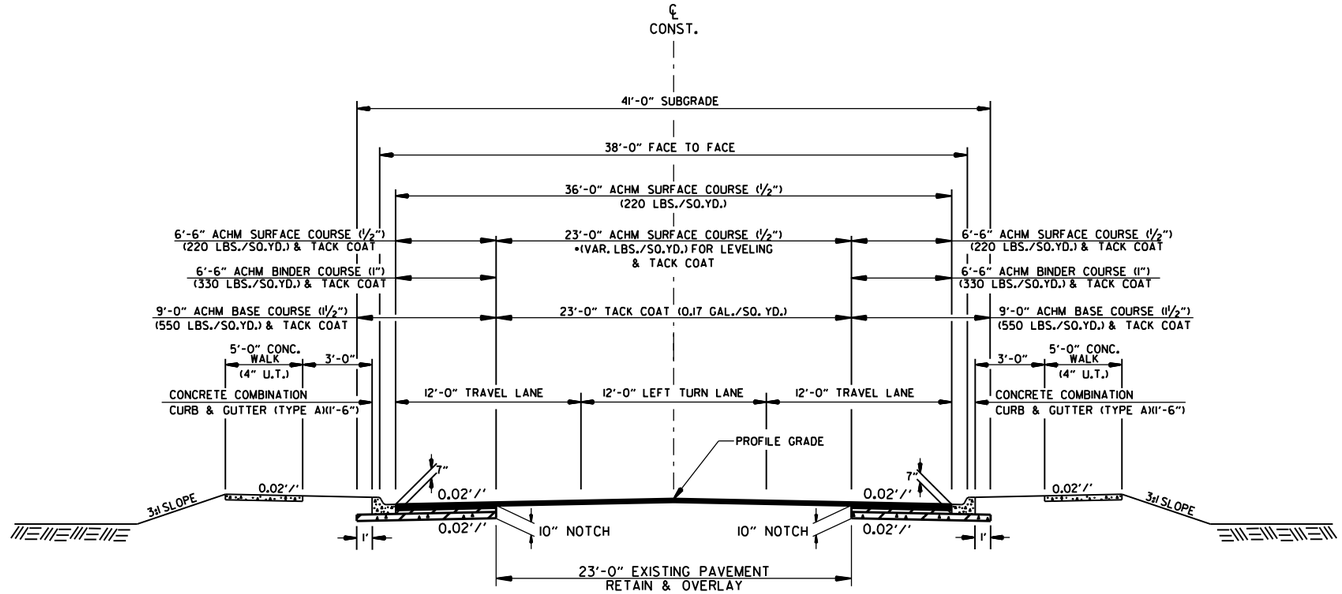

S. COKER ST. - NOTCH AND WIDEN
STA. 401+00.00 - STA. 404+70.99
STA. 405+29.05 - STA. 408+63.00

NOTES:

REFER TO CROSS SECTIONS FOR DEVIATION FROM THE NORMAL SLOPES. NO CHANGES SHALL BE MADE FROM THE PLANNED SLOPES WITHOUT THE APPROVAL OF THE ENGINEER.

ASPHALT FOR LEVELING OF EXISTING PAVEMENT SHALL BE PLACED ONLY IF AND WHERE DIRECTED BY THE ENGINEER. CALCULATIONS FOR THE AMOUNT OF LEVELING AND LEVELING OPERATIONS SHALL BE PERFORMED BEFORE CONSTRUCTING NOTCH AND WIDENING. CALCULATIONS WILL NOT BE PAID FOR DIRECTLY BUT PAYMENT WILL BE CONSIDERED INCLUDED IN THE VARIOUS PAY ITEMS.

THE FINAL 2" OF SURFACE COURSE IS TO BE PLACED AFTER ALL OTHER COURSES HAVE BEEN LAID. LONGITUDINAL JOINTS SHALL BE AT LANE LINES.

PRIOR TO AND DURING PLACEMENT OF PAVEMENT IN FRONT OF THE CURB AND GUTTER, THE CONTRACTOR SHALL PROVIDE POSITIVE DRAINAGE AT ALL TIMES. THE METHOD(S) USED SHALL BE APPROVED BY THE ENGINEER. PAYMENT FOR THIS WORK SHALL BE CONSIDERED INCLUDED IN THE PRICE BID FOR THE VARIOUS CONTRACT ITEMS.

TYPICAL SECTIONS OF IMPROVEMENT

DATE REVISED	DATE REVISED	FED.RD. DIST.NO.	STATE	JOB NO.	SHEET NO.	TOTAL SHEETS
10-24-2023		6	ARK.	040861	11	291
		TYPICAL SECTIONS OF IMPROVEMENT				

STATE OF ARKANSAS
LICENSED PROFESSIONAL ENGINEER
No. 11425
TRINITY D. SMITH

10-25-2023

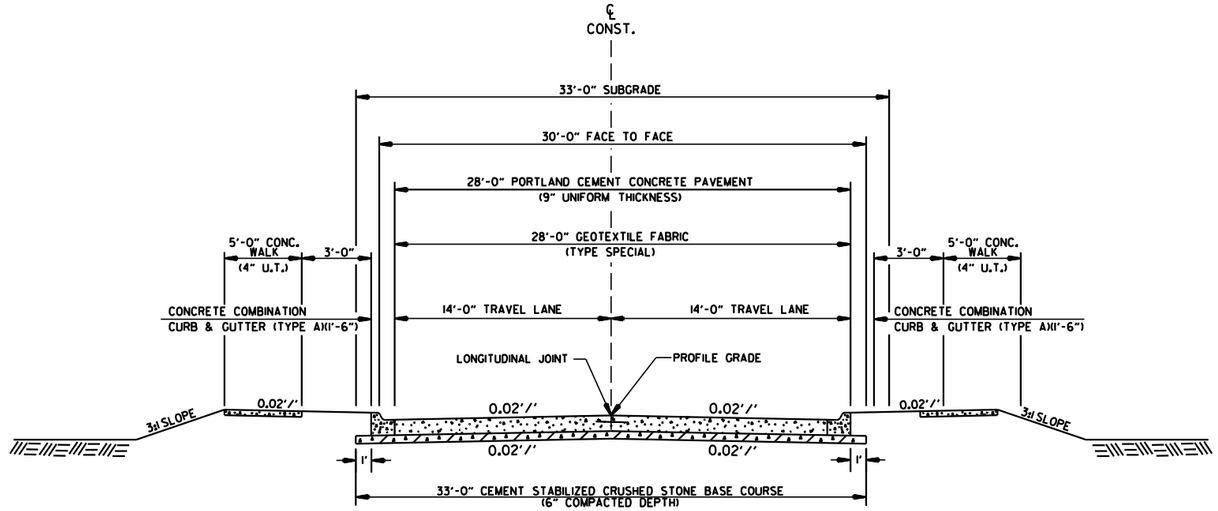

MAIN ST. - FULL DEPTH
STA. 600+28.00 - STA. 600+60.10
STA. 605+78.97 - STA. 606+52.59

NOTES:

REFER TO CROSS SECTIONS FOR DEVIATION FROM THE NORMAL SLOPES. NO CHANGES SHALL BE MADE FROM THE PLANNED SLOPES WITHOUT THE APPROVAL OF THE ENGINEER.

ASPHALT FOR LEVELING OF EXISTING PAVEMENT SHALL BE PLACED ONLY IF AND WHERE DIRECTED BY THE ENGINEER. CALCULATIONS FOR THE AMOUNT OF LEVELING AND LEVELING OPERATIONS SHALL BE PERFORMED BEFORE CONSTRUCTING NOTCH AND WIDENING. CALCULATIONS WILL NOT BE PAID FOR DIRECTLY BUT PAYMENT WILL BE CONSIDERED INCLUDED IN THE VARIOUS PAY ITEMS.

THE FINAL 2" OF SURFACE COURSE IS TO BE PLACED AFTER ALL OTHER COURSES HAVE BEEN LAID. LONGITUDINAL JOINTS SHALL BE AT LANE LINES.

PRIOR TO AND DURING PLACEMENT OF PAVEMENT IN FRONT OF THE CURB AND GUTTER, THE CONTRACTOR SHALL PROVIDE POSITIVE DRAINAGE AT ALL TIMES. THE METHOD(S) USED SHALL BE APPROVED BY THE ENGINEER. PAYMENT FOR THIS WORK SHALL BE CONSIDERED INCLUDED IN THE PRICE BID FOR THE VARIOUS CONTRACT ITEMS.

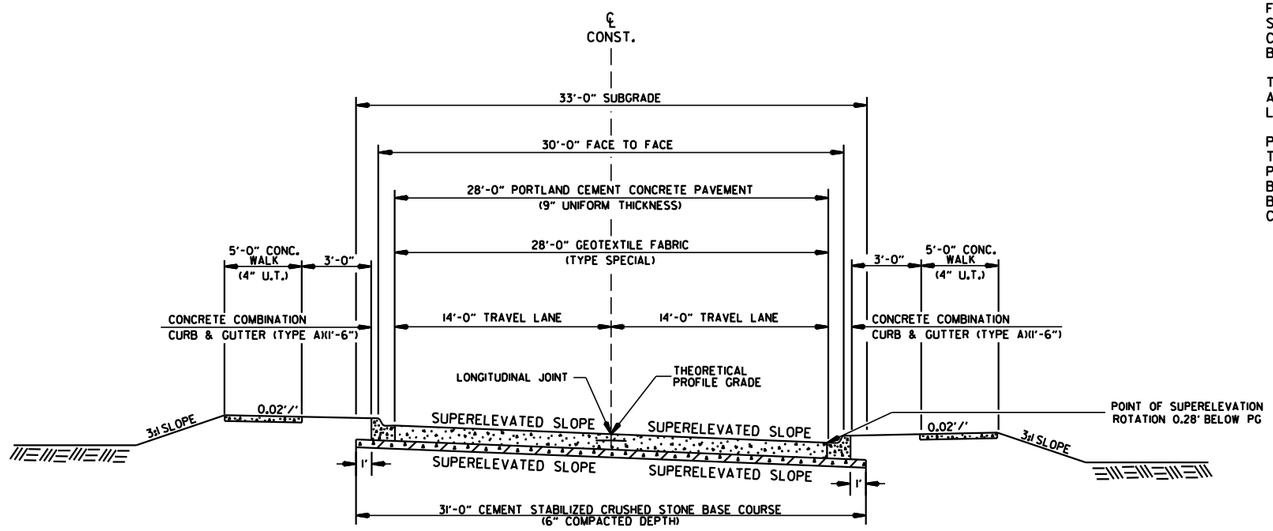

MAIN ST. - FULL DEPTH SUPERELEVATED
STA. 600+60.10 - STA. 605+78.97

er42959 12/3/2021
R040861.DGN

TYPICAL SECTIONS OF IMPROVEMENT

DATE REVISED	DATE REVISED	FED.RD. DIST.NO.	STATE	JOB NO.	SHEET NO.	TOTAL SHEETS
		6	ARK.	040861	12	291
		TYPICAL SECTIONS OF IMPROVEMENT				

STATE OF ARKANSAS
LICENSED PROFESSIONAL ENGINEER
No. 11425
TRINITY D. SMITH

09-27-2023

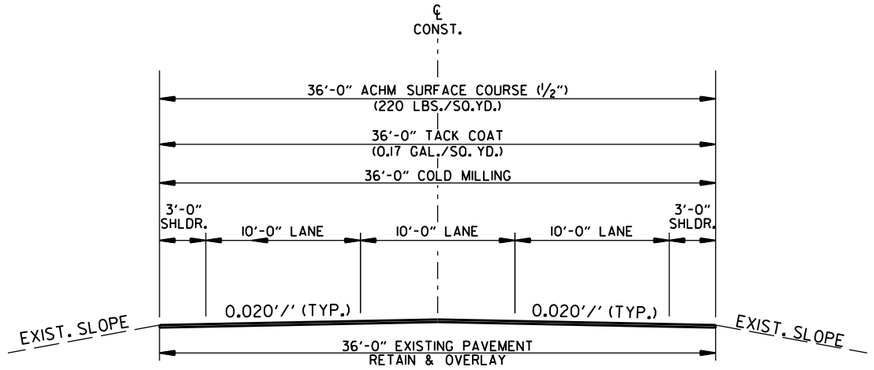

3 LANE OPEN SHOULDER INLAY

HWY. 10 SECTION 1
LOG MILE 0.000 TO LOG MILE 0.010
LOG MILE 0.043 TO LOG MILE 0.109
LOG MILE 0.305 TO LOG MILE 0.360

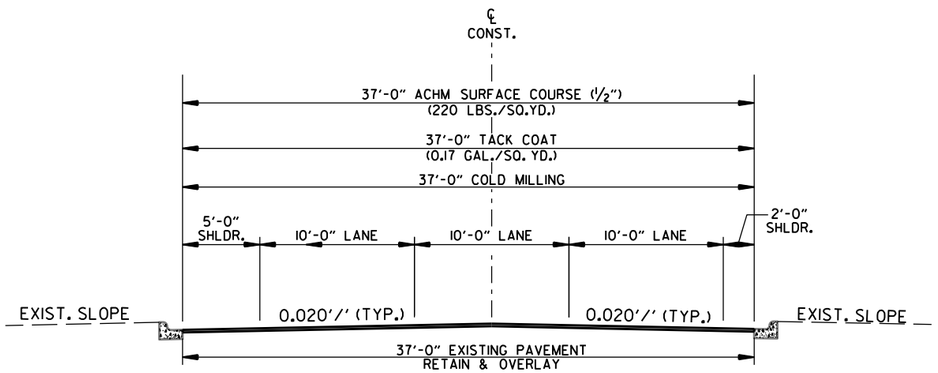

3 LANE CURB & GUTTER INLAY

HWY. 10 SECTION 1
LOG MILE 0.109 TO LOG MILE 0.180

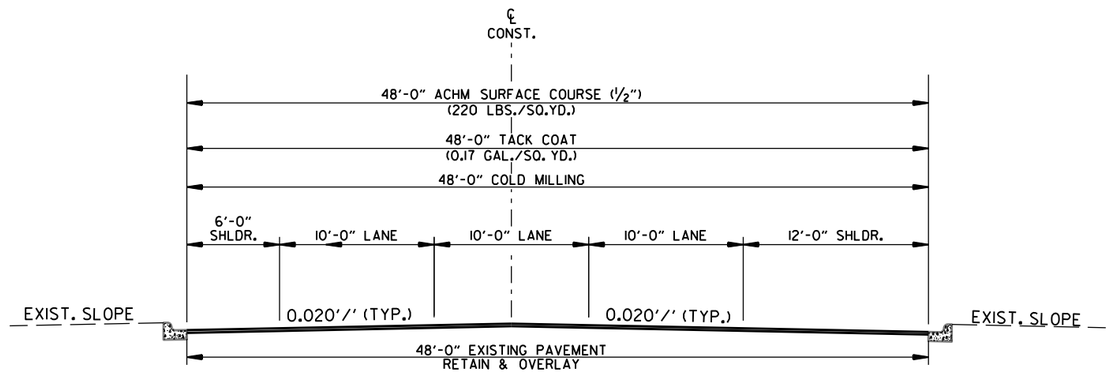

3 LANE CURB & GUTTER INLAY

HWY. 10 SECTION 1
LOG MILE 0.236 TO LOG MILE .305

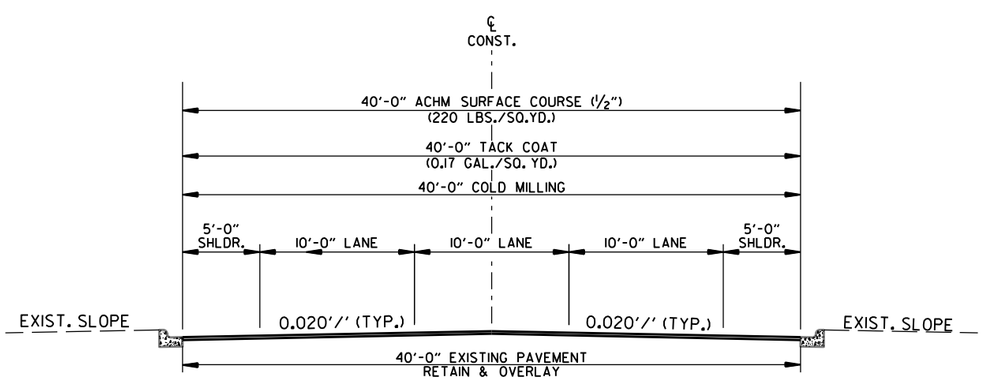

3 LANE CURB & GUTTER INLAY

HWY. 10 SECTION 1
LOG MILE 0.180 TO LOG MILE 0.236

NOTES:
1. LONGITUDINAL JOINTS ARE TO BE PLACED PER TYPICAL SECTION IN ACCORDANCE WITH DECTION 410.07 UNLESS OTHERWISE APPROVED BY THE ENGINEER.

2. ALL CROSS SLOPES ARE TO MATCH EXISTING CROSS SLOPES UNLESS OTHERWISE APPROVED BY THE ENGINEER.

TYPICAL SECTIONS OF IMPROVEMENT

er42959 12/3/2021
R040861.DGN

DATE REVISED	DATE REVISED	FED.RD. DIST.NO.	STATE	JOB NO.	SHEET NO.	TOTAL SHEETS
		6	ARK.	040861	13	291
		TYPICAL SECTIONS OF IMPROVEMENT				

STATE OF ARKANSAS
LICENSED PROFESSIONAL ENGINEER
No. 11425
TRINITY D. SMITH

09-27-2023

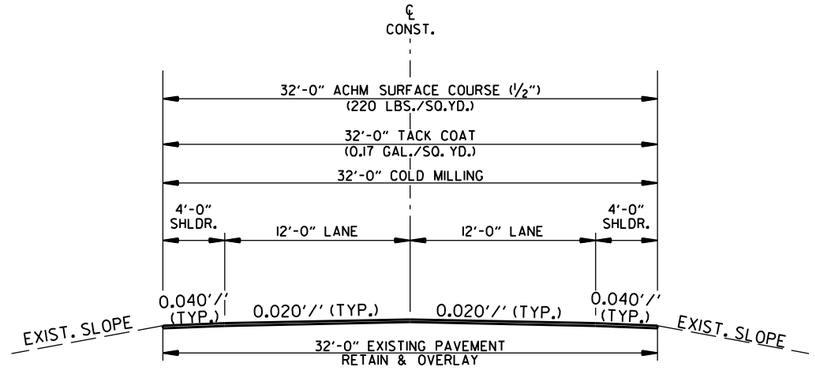

3 LANE OPEN SHOULDER INLAY

HWY. 10 SECTION 0
LOG MILE 10.80 TO LOG MILE 11.053

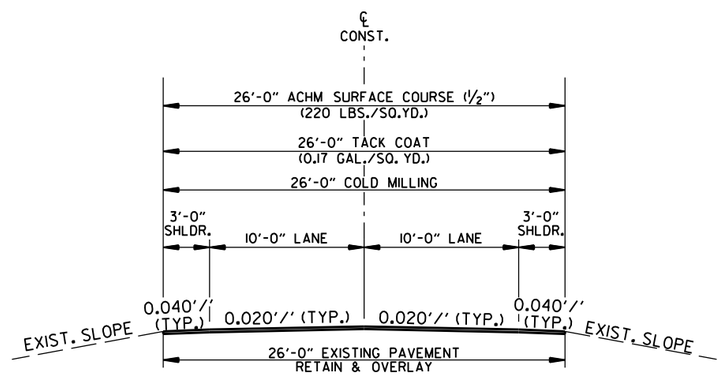

3 LANE OPEN SHOULDER INLAY

HWY. 10 SECTION 0
LOG MILE 11.069 TO LOG MILE 11.130

NOTES:

1. LONGITUDINAL JOINTS ARE TO BE PLACED PER TYPICAL SECTION IN ACCORDANCE WITH DECTION 410.07 UNLESS OTHERWISE APPROVED BY THE ENGINEER.

2. ALL CROSS SLOPES ARE TO MATCH EXISTING CROSS SLOPES UNLESS OTHERWISE APPROVED BY THE ENGINEER.

er42959 12/3/2021
R040861.DGN

TYPICAL SECTIONS OF IMPROVEMENT

DATE REVISED	DATE REVISED	FED.RD. DIST.NO.	STATE	JOB NO.	SHEET NO.	TOTAL SHEETS
		6	ARK.	040861	14	291
		SPECIAL DETAILS				

STATE OF ARKANSAS
LICENSED PROFESSIONAL ENGINEER
No. 11425
TRINITY D. SMITH
09-27-2023

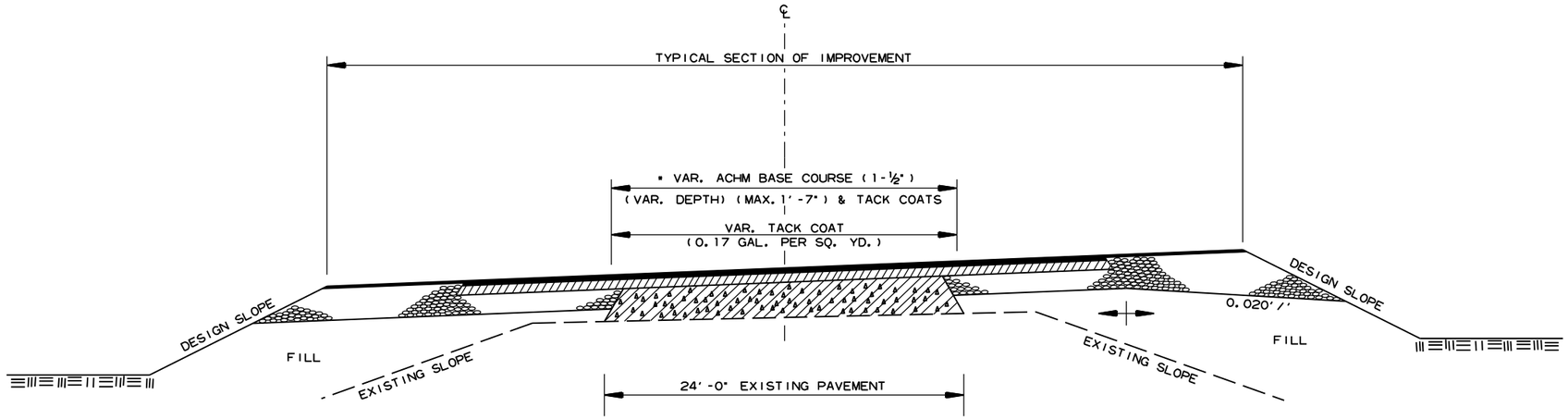

* 7" AGGREGATE BASE COURSE (CLASS 7)
TO BE REPLACED WITH ACHM BASE COURSE (1-½")

METHOD OF RAISING GRADE

NOTES:

(1) THIS DETAIL TO BE USED ONLY WHERE DIRECTED BY THE ENGINEER.

(2) QUANTITIES FOR METHOD OF GRADE RAISE USING ASPHALT WERE CALCULATED ON THIS PROJECT AT LOCATIONS WHERE THE DISTANCE BETWEEN THE EXISTING ASPHALT ROADWAY AND THE PROPOSED SUBGRADE WAS ONE FOOT OR LESS.

(3) IN LOCATIONS WHERE THE DISTANCE BETWEEN THE PROPOSED SUBGRADE AND THE EXISTING ASPHALT ROADWAY IS MORE THAN ONE FOOT, SCARIFICATION OF THE EXISTING ASPHALT ROADWAY WILL BE REQUIRED AS STATED IN SECTION 210, SUBSECTION 210.09, OF THE STANDARD SPECIFICATIONS.

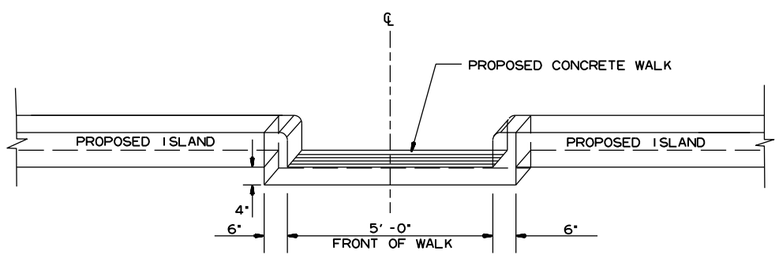

FACE SHALL MEET REQUIREMENTS
OF TYPE B CURB

NOTE: CONCRETE WALK-THROUGH ISLAND SHALL BE POURED MONOLITHICALLY. ALL MATERIALS REQUIRED TO CONSTRUCT CONCRETE WALK-THROUGH ISLAND SHALL BE INCLUDED IN THE PRICE BID FOR CONCRETE ISLAND.

CONCRETE WALK-THROUGH ISLAND

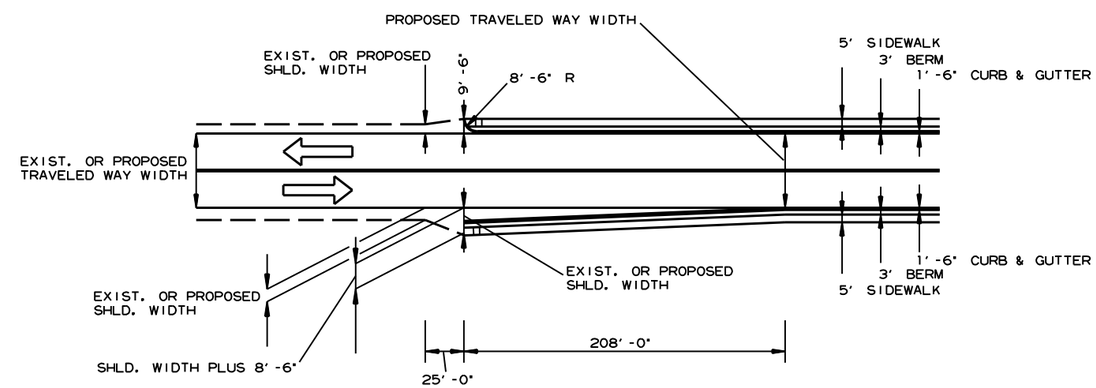

TRANSITION FROM OPEN SHOULDER TO CURB & GUTTER SECTION

rb43088 9/19/2023
R040861.DGN

DATE REVISED	DATE REVISED	FED.RD. DIST.NO.	STATE	JOB NO.	SHEET NO.	TOTAL SHEETS
10-24-2023		6	ARK.	040861	15	291
		SPECIAL DETAILS				

STATE OF ARKANSAS LICENSED PROFESSIONAL ENGINEER No. 11425 TRINITY D. SMITH

10-25-2023

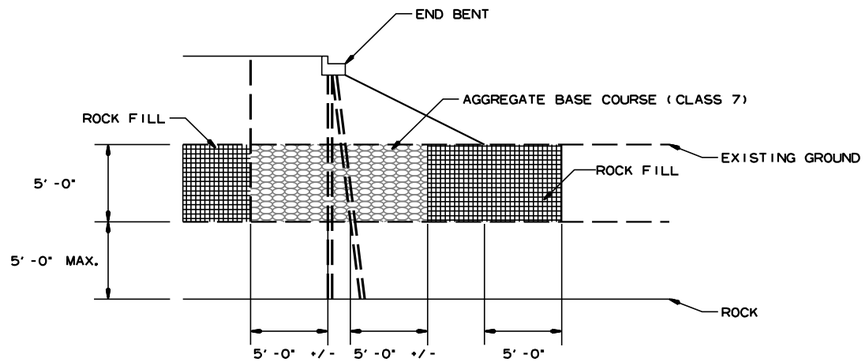

ROCK FILL DETAIL

NOTE: PREBORING OR OTHER METHODS AS APPROVED BY THE ENGINEER MAY BE USED TO FACILITATE PILE INSTALLATION THROUGH THE EXISTING AGGREGATE BASE COURSE (CLASS 7) MATERIAL AT THESE LOCATIONS. THE INSTALLATION OF PILES, WHERE ROCK FILL IS USED FOR EMBANKMENT CONSTRUCTION, WILL NOT BE PAID FOR SEPARATELY BUT SHALL BE INCLUDED IN ITEM "STEEL PILING".

ROCK FILL LOCATIONS:

STA.	STA.
204+95.00	212+11.50
218+50.78	224+96.19
235+42.50	240+40.56
502+93.49	508+61.50
520+03.52	524+86.51

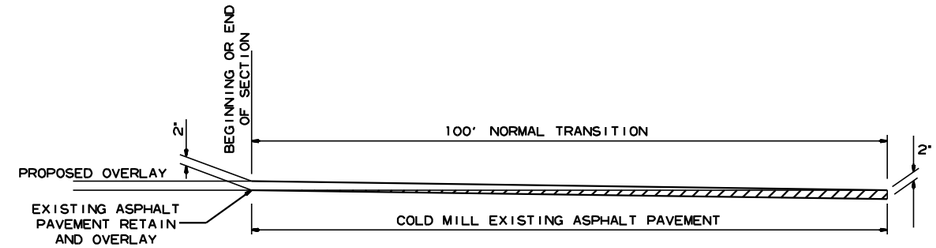

DETAIL FOR TRANSITIONS

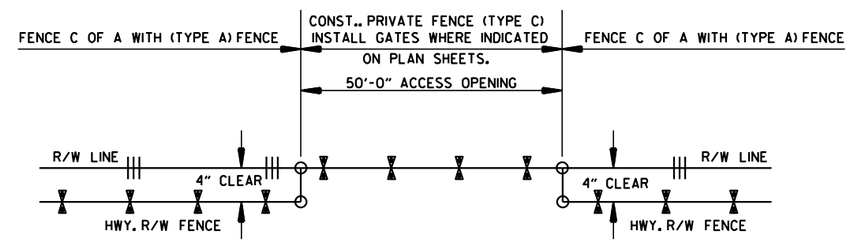

DETAIL OF ACCESS OPENINGS

(NO SCALE)

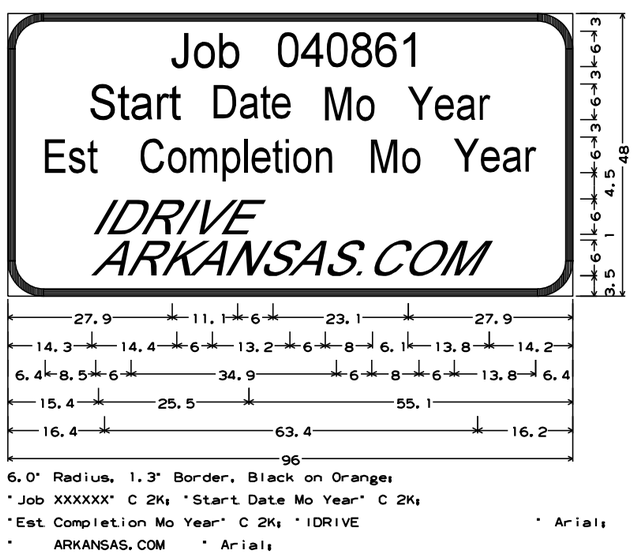

6.0" Radius, 1.3" Border, Black on Orange;
"Job XXXXXX" C 2K; "Start Date Mo Year" C 2K;
"Est Completion Mo Year" C 2K; "IDRIVE " Arial;
" ARKANSAS.COM " Arial;

CONSTRUCTION PROJECT INFORMATION SIGN

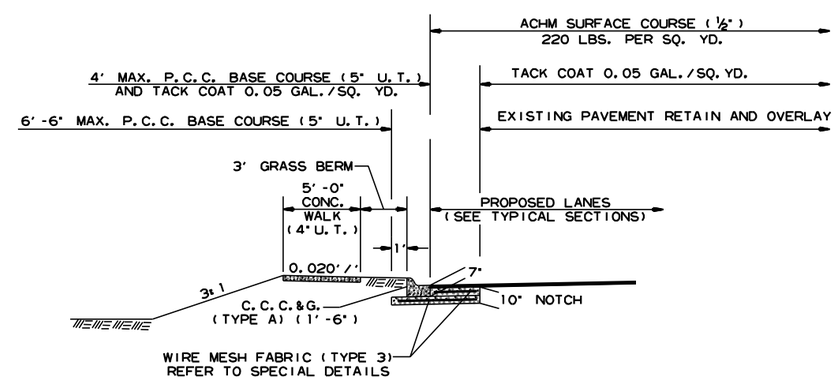

P.C.C. BASE WIDENING DETAIL

P.C.C. BASE WIDENING TO BE USED IF AND WHERE DIRECTED BY THE ENGINEER.

rb43088 10/24/2023
R040861.DGN

DATE REVISED	DATE REVISED	FED.RD. DIST.NO.	STATE	JOB NO.	SHEET NO.	TOTAL SHEETS
		6	ARK.	040861	16	291
		SPECIAL DETAILS				

STATE OF ARKANSAS
LICENSED PROFESSIONAL ENGINEER
No. 11425
TRINITY D. SMITH

09-27-2023

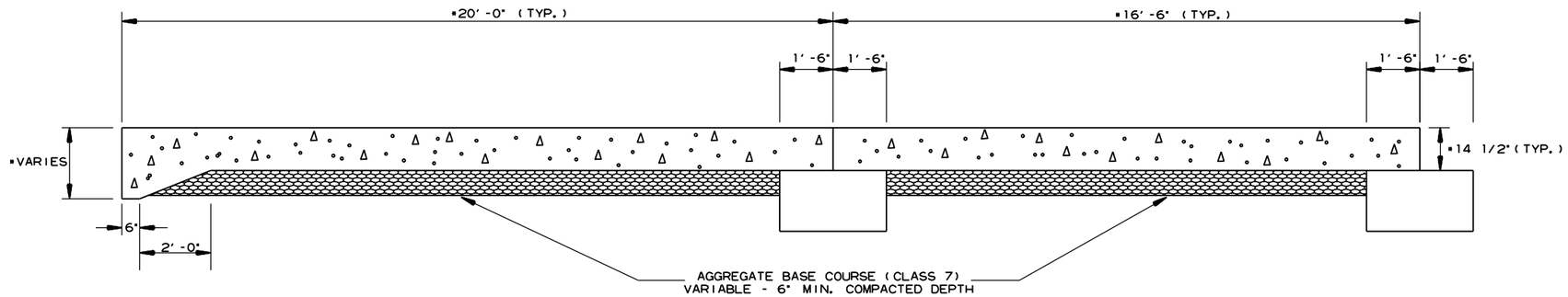

* SEE APPROACH SLAB DETAILS IN BRIDGE DRAWINGS

SECTION OF APPROACH SLAB
(FOR CONCRETE PAVEMENT)

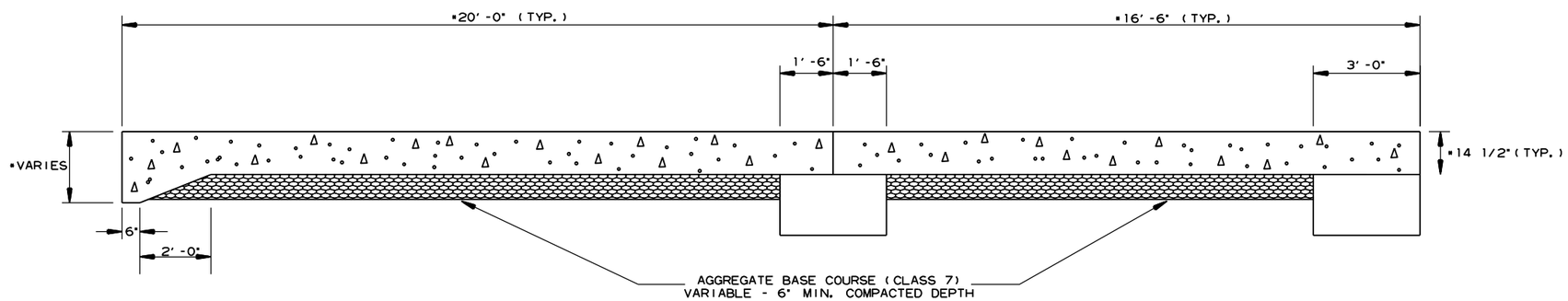

* SEE APPROACH SLAB DETAILS IN BRIDGE DRAWINGS

SECTION OF APPROACH SLAB
(FOR ASPHALT PAVEMENT)

rb43088 9/19/2023
R040861.DGN

DATE REVISED	DATE REVISED	FED.RD. DIST.NO.	STATE	JOB NO.	SHEET NO.	TOTAL SHEETS
		6	ARK.	040861	17	291
		SPECIAL DETAILS				

STATE OF ARKANSAS LICENSED PROFESSIONAL ENGINEER No. 11425 TRINITY D. SMITH

09-27-2023

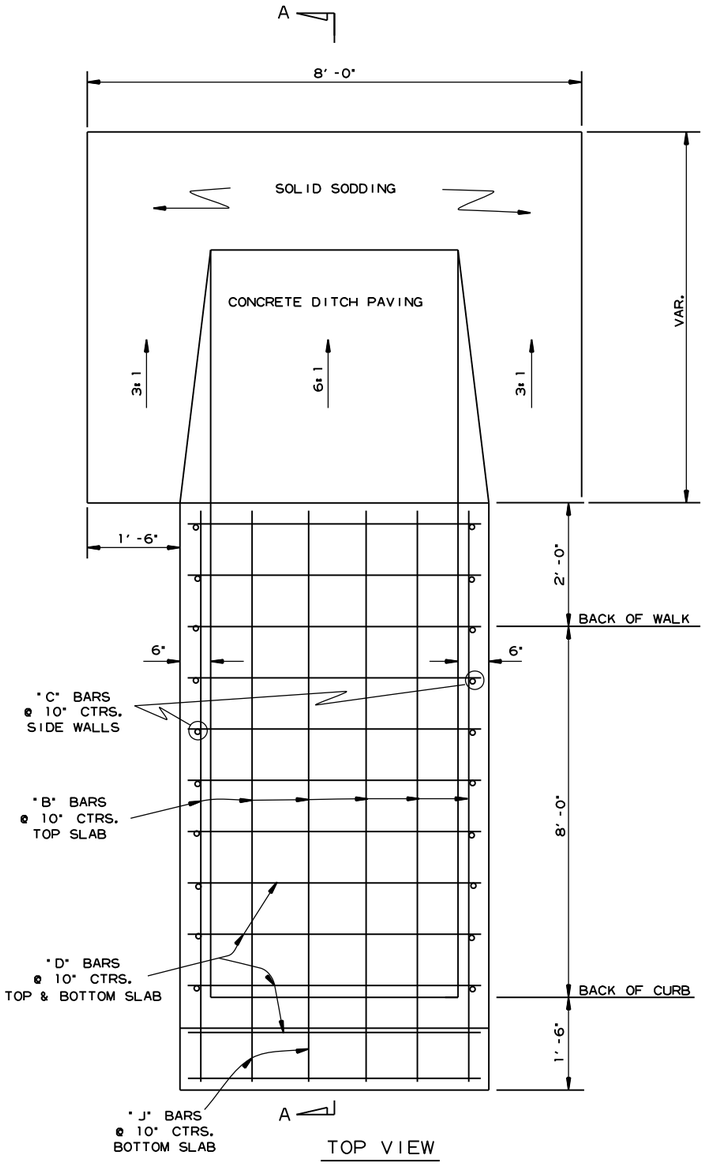

TOP VIEW

BAR DIAGRAM

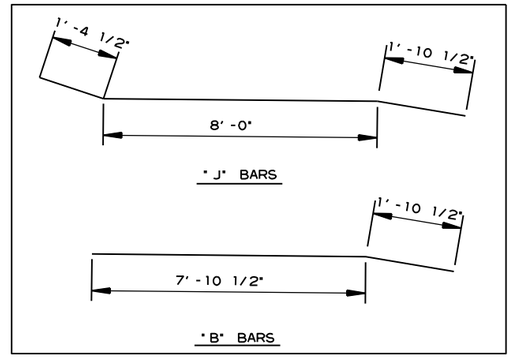

CLASS A CONC.	REINF. STEEL-RDWY. GRADE 60
CU. YDS.	POUND
2.53	207

QUANTITIES FOR INFORMATION ONLY
DROP INLET (TYPE SPECIAL)

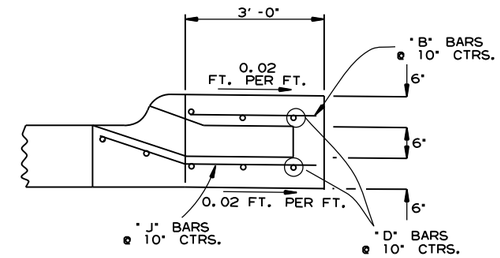

SECTION A-A - EXTENSION

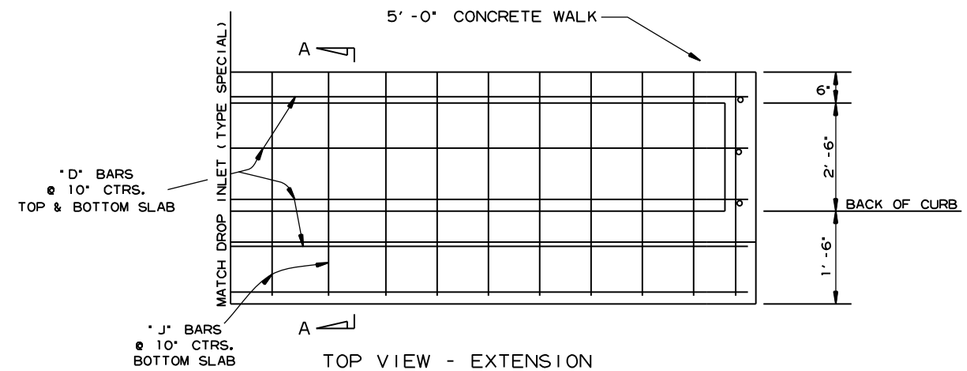

TOP VIEW - EXTENSION

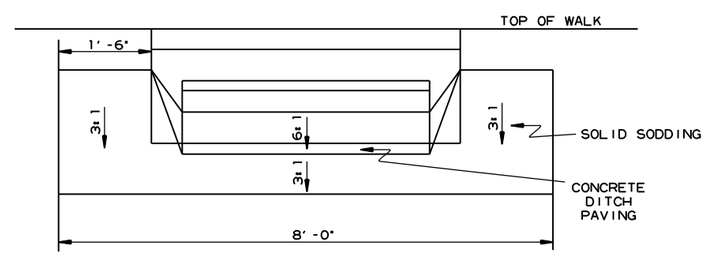

BACK VIEW

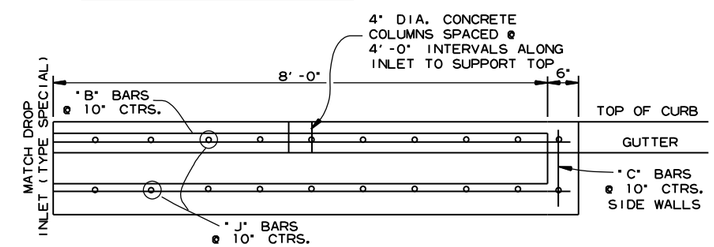

FRONT VIEW - EXTENSION

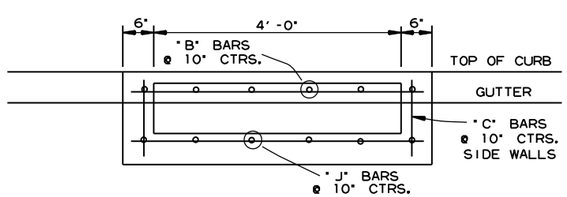

FRONT VIEW

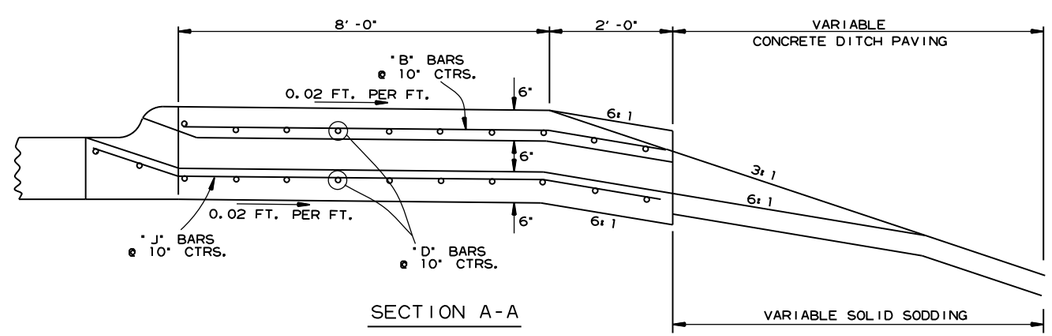

SECTION A-A

GENERAL NOTES:

1. ALL EXPOSED CORNERS TO HAVE 3/4" CHAMFER.
2. ALL REINF. BARS SHALL BE #4 AND HAVE 1-1/2" COVER.
3. DROP INLETS AND EXTENSIONS ON CURVED SECTIONS SHALL CONFORM TO THE CURVATURE OF THE CURB.
4. DURING CONSTRUCTION OF THE ROADWAY THE CONTRACTOR SHALL MAINTAIN DRAINAGE INTO OR AROUND THE DROP INLET AS APPROVED BY THE ENGINEER.
5. PAYMENT FOR CURB AND/OR CURB AND GUTTER WITHIN THE LIMITS OF DROP INLETS AND DROP INLET EXTENSIONS SHALL BE CONSIDERED INCLUDED IN PAYMENT MADE FOR DROP INLETS AND/OR DROP INLET EXTENSIONS.
6. CONCRETE DITCH PAVING & SOLID SODDING SHALL BE PAID FOR SEPARATELY.
7. CONSTRUCT EXTENSIONS UPSTREAM OF DROP INLET UNLESS OTHERWISE SPECIFIED.

DROP INLET (TYPE SPECIAL)

SPECIAL DETAILS

rb43088 9/19/2023
R040861.DGN

DATE REVISED	DATE REVISED	FED.RD. DIST.NO.	STATE	JOB NO.	SHEET NO.	TOTAL SHEETS
		6	ARK.	040861	18	291
		TEMPORARY EROSION CONTROL DETAILS				

STATE OF ARKANSAS
LICENSED PROFESSIONAL ENGINEER
No. 11425
TRINITY D. SMITH
09-27-2023

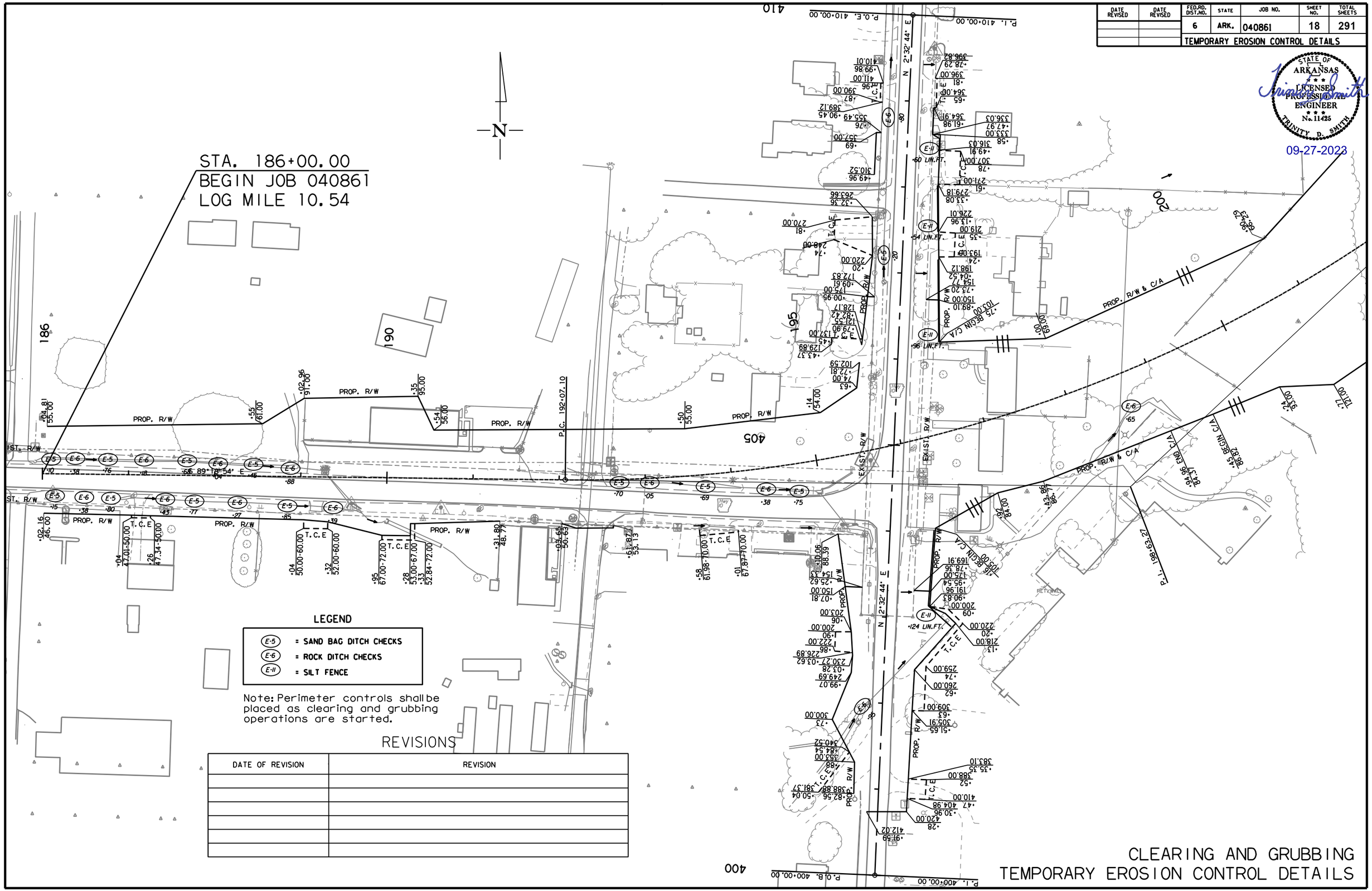

rb43088 9/15/2023
R040861.DGN

DATE REVISED	DATE REVISED	FED.RD. DIST.NO.	STATE	JOB NO.	SHEET NO.	TOTAL SHEETS
		6	ARK.	040861	19	291

TEMPORARY EROSION CONTROL DETAILS

STATE OF ARKANSAS LICENSED PROFESSIONAL ENGINEER No. 11425 TRINITY D. SMITH

09-27-2023

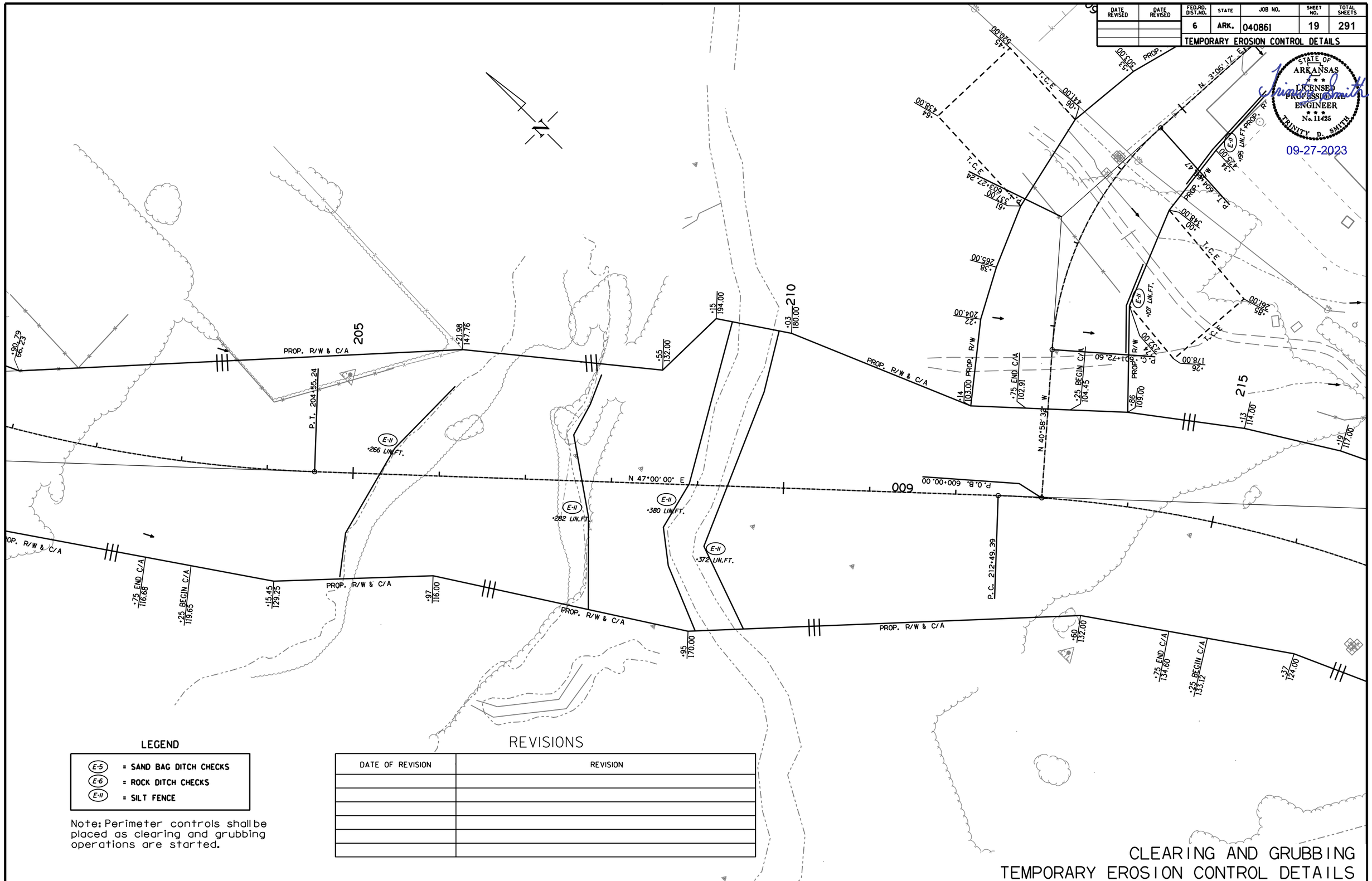

LEGEND

E-5	= SAND BAG DITCH CHECKS
E-6	= ROCK DITCH CHECKS
E-11	= SILT FENCE

Note: Perimeter controls shall be placed as clearing and grubbing operations are started.

REVISIONS

DATE OF REVISION	REVISION

CLEARING AND GRUBBING
TEMPORARY EROSION CONTROL DETAILS

rb43088 9/15/2023
R040861.DGN

DATE REVISED	DATE REVISED	FED.RD. DIST.NO.	STATE	JOB NO.	SHEET NO.	TOTAL SHEETS
		6	ARK.	040861	20	291
		TEMPORARY EROSION CONTROL DETAILS				

STATE OF ARKANSAS
LICENSED PROFESSIONAL ENGINEER
No. 11425
TRINITY D. SMITH
09-27-2023

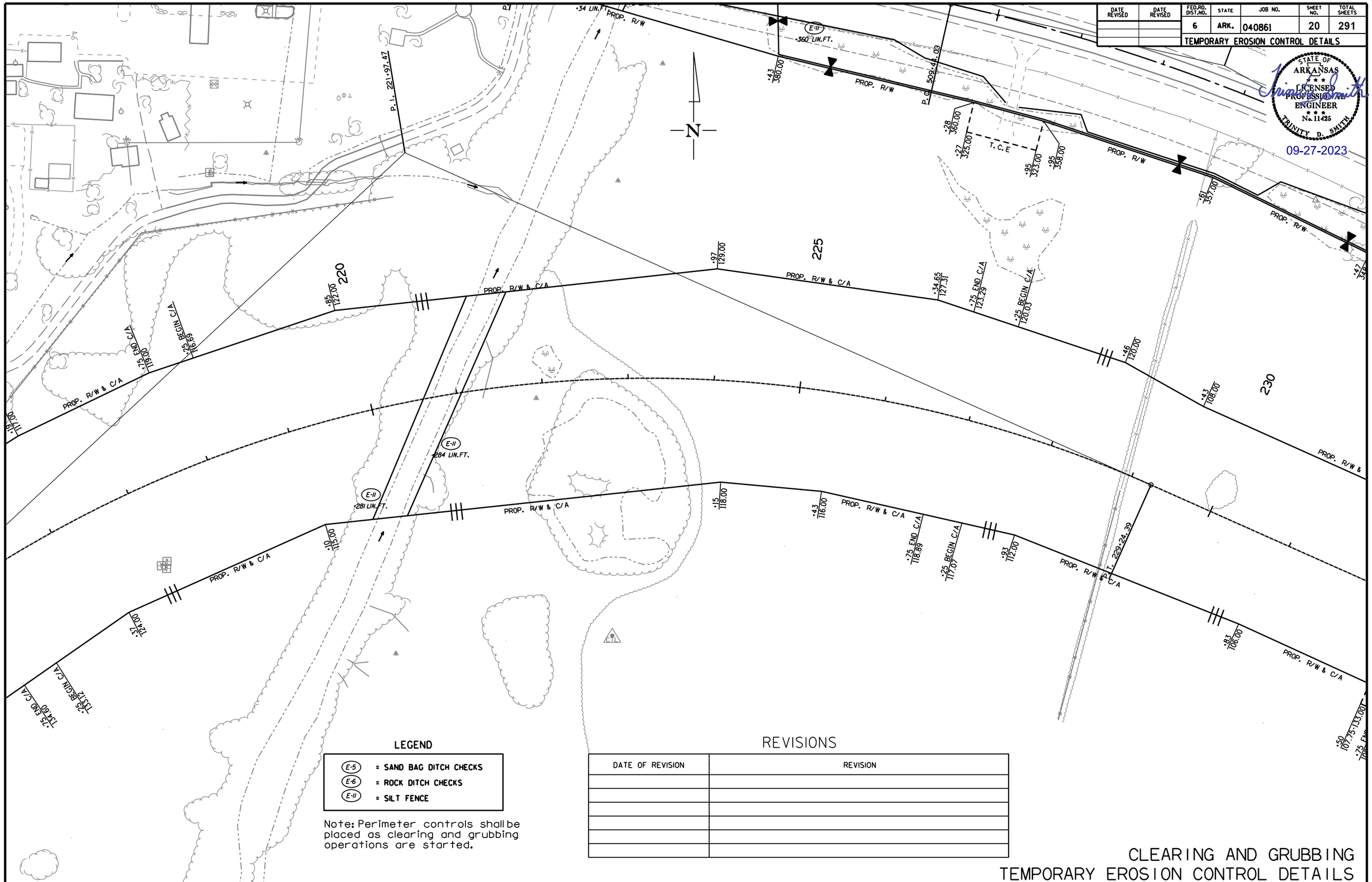

LEGEND

E-5	= SAND BAG DITCH CHECKS
E-6	= ROCK DITCH CHECKS
E-11	= SILT FENCE

Note: Perimeter controls shall be placed as clearing and grubbing operations are started.

REVISIONS

DATE OF REVISION	REVISION

CLEARING AND GRUBBING
TEMPORARY EROSION CONTROL DETAILS

rb43088 9/15/2023
R040861.DGN

DATE REVISED	DATE REVISED	FED.RD. DIST.NO.	STATE	JOB NO.	SHEET NO.	TOTAL SHEETS
		6	ARK.	040861	21	291
		TEMPORARY EROSION CONTROL DETAILS				

STATE OF ARKANSAS
LICENSED PROFESSIONAL ENGINEER
No. 11425
TRINITY D. SMITH

09-27-2023

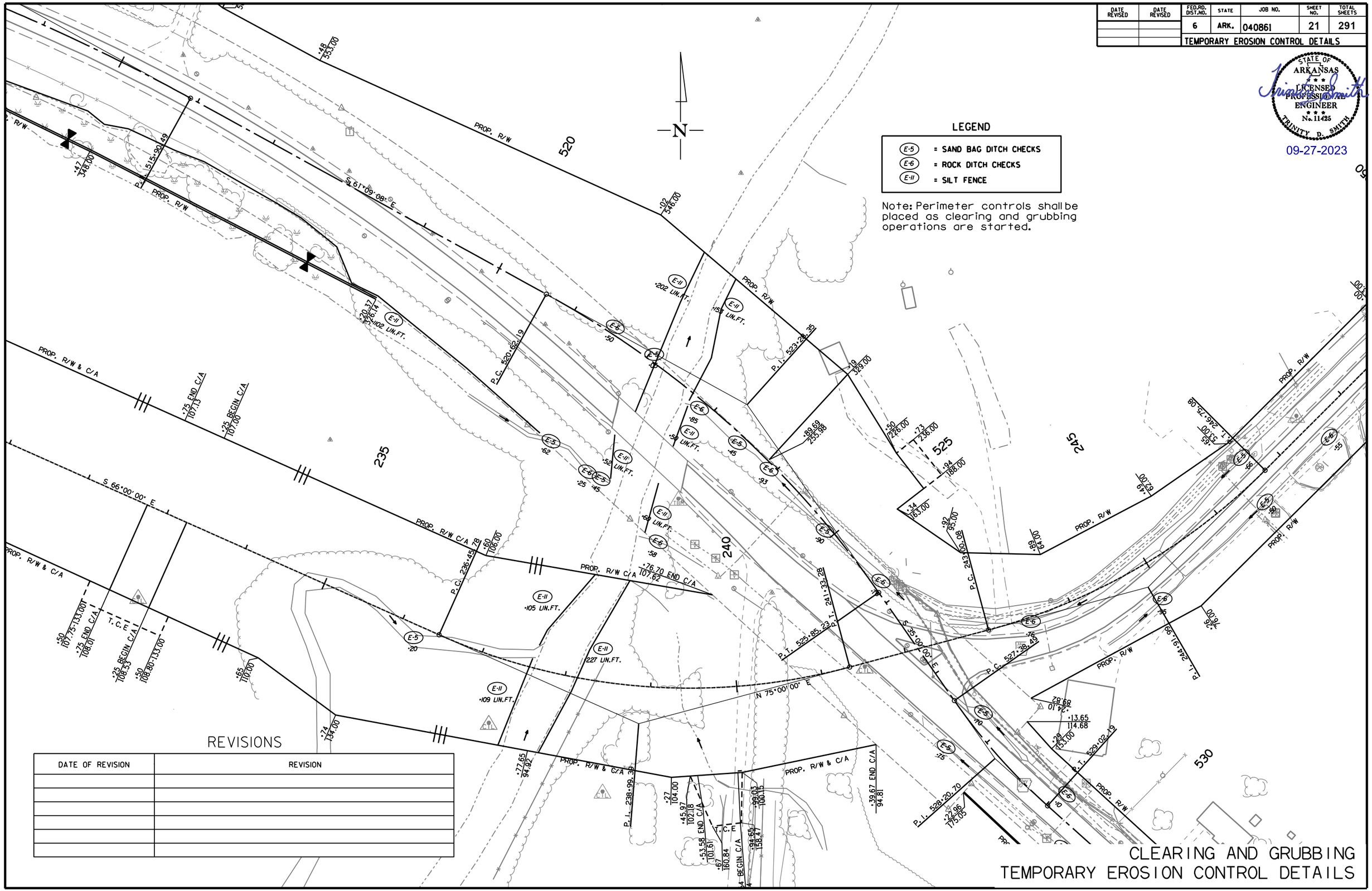

LEGEND

E-5	= SAND BAG DITCH CHECKS
E-6	= ROCK DITCH CHECKS
E-11	= SILT FENCE

Note: Perimeter controls shall be placed as clearing and grubbing operations are started.

REVISIONS

DATE OF REVISION	REVISION

CLEARING AND GRUBBING
TEMPORARY EROSION CONTROL DETAILS

rb43088 9/15/2023
R040861.DGN

DATE REVISED	DATE REVISED	FED.RD. DIST.NO.	STATE	JOB NO.	SHEET NO.	TOTAL SHEETS
		6	ARK.	040861	22	291
		TEMPORARY EROSION CONTROL DETAILS				

STATE OF ARKANSAS
LICENSED PROFESSIONAL ENGINEER
No. 11425
TRINITY D. SMITH

09-27-2023

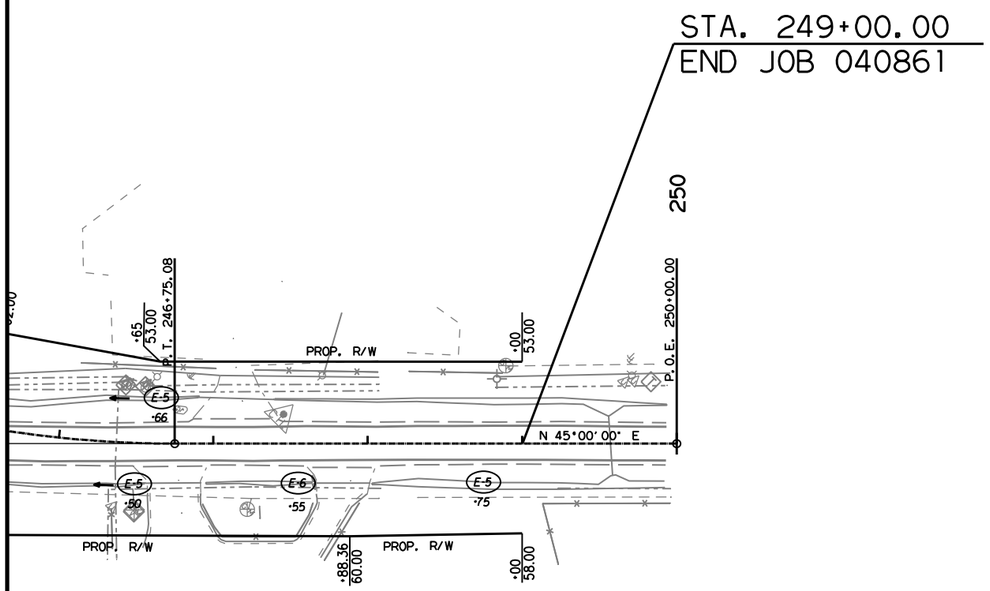

LEGEND

E-5	= SAND BAG DITCH CHECKS
E-6	= ROCK DITCH CHECKS
E-11	= SILT FENCE

Note: Perimeter controls shall be placed as clearing and grubbing operations are started.

REVISIONS

DATE OF REVISION	REVISION

CLEARING AND GRUBBING
TEMPORARY EROSION CONTROL DETAILS

rb43088 9/15/2023
R040861.DGN

DATE REVISED	DATE REVISED	FED.RD. DIST.NO.	STATE	JOB NO.	SHEET NO.	TOTAL SHEETS
		6	ARK.	040861	23	291
		TEMPORARY EROSION CONTROL DETAILS				

STATE OF ARKANSAS
LICENSED PROFESSIONAL ENGINEER
No. 11425
TRINITY D. SMITH
09-27-2023

LEGEND

E-5	= SAND BAG DITCH CHECKS
E-6	= ROCK DITCH CHECKS
E-11	= SILT FENCE

Note: Perimeter controls shall be placed as clearing and grubbing operations are started.

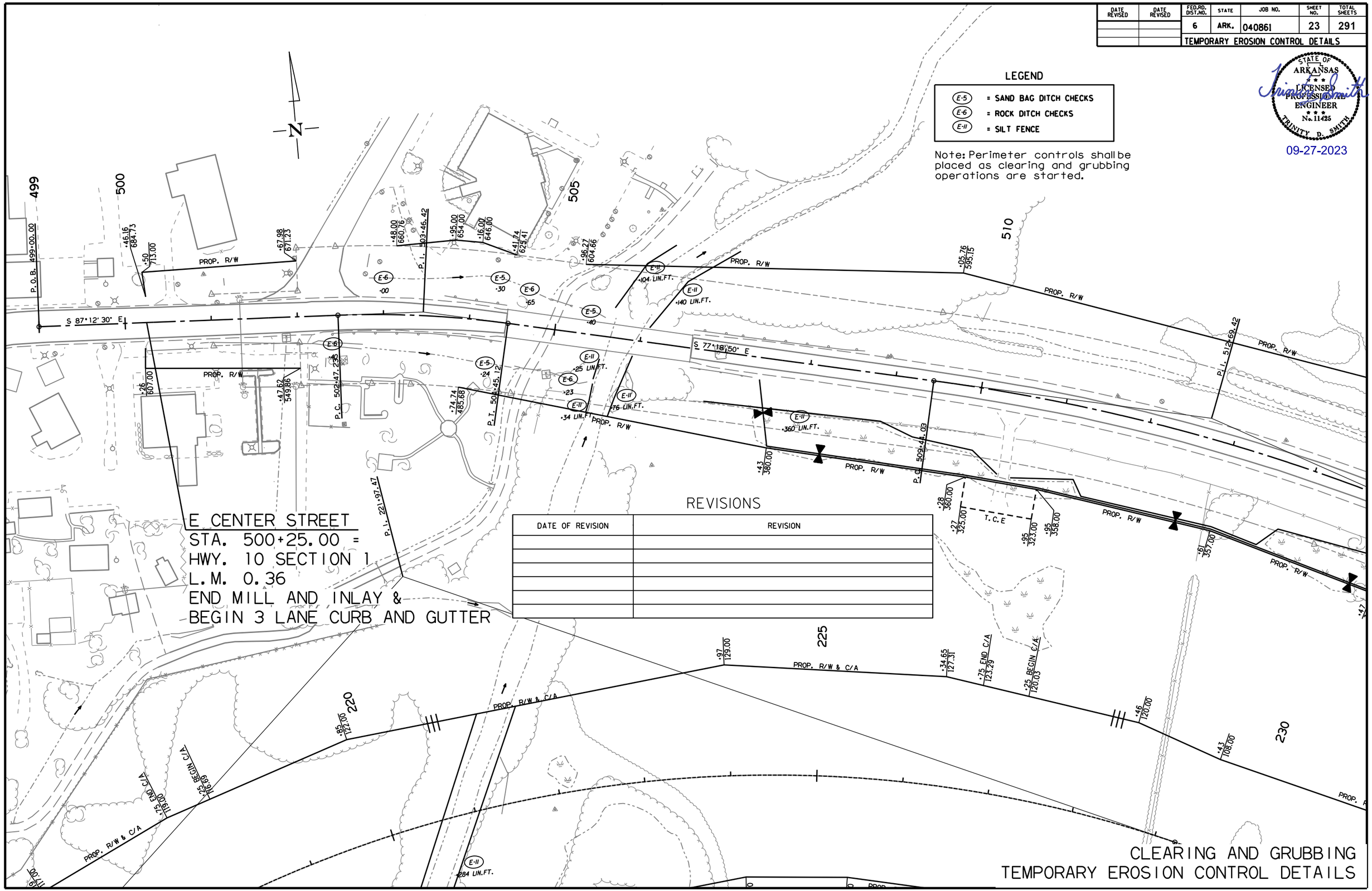

REVISIONS

DATE OF REVISION	REVISION

CLEARING AND GRUBBING
TEMPORARY EROSION CONTROL DETAILS

rb43088 9/15/2023
R040861.DGN

DATE REVISED	DATE REVISED	FED.RD. DIST.NO.	STATE	JOB NO.	SHEET NO.	TOTAL SHEETS
		6	ARK.	040861	24	291
		TEMPORARY EROSION CONTROL DETAILS				

STATE OF ARKANSAS
LICENSED PROFESSIONAL ENGINEER
No. 11425
TRINITY D. SMITH
09-27-2023

REVISIONS

DATE OF REVISION	REVISION

LEGEND

- E-5 = SAND BAG DITCH CHECKS
- E-6 = ROCK DITCH CHECKS
- E-11 = SILT FENCE

Note: Perimeter controls shall be placed as clearing and grubbing operations are started.

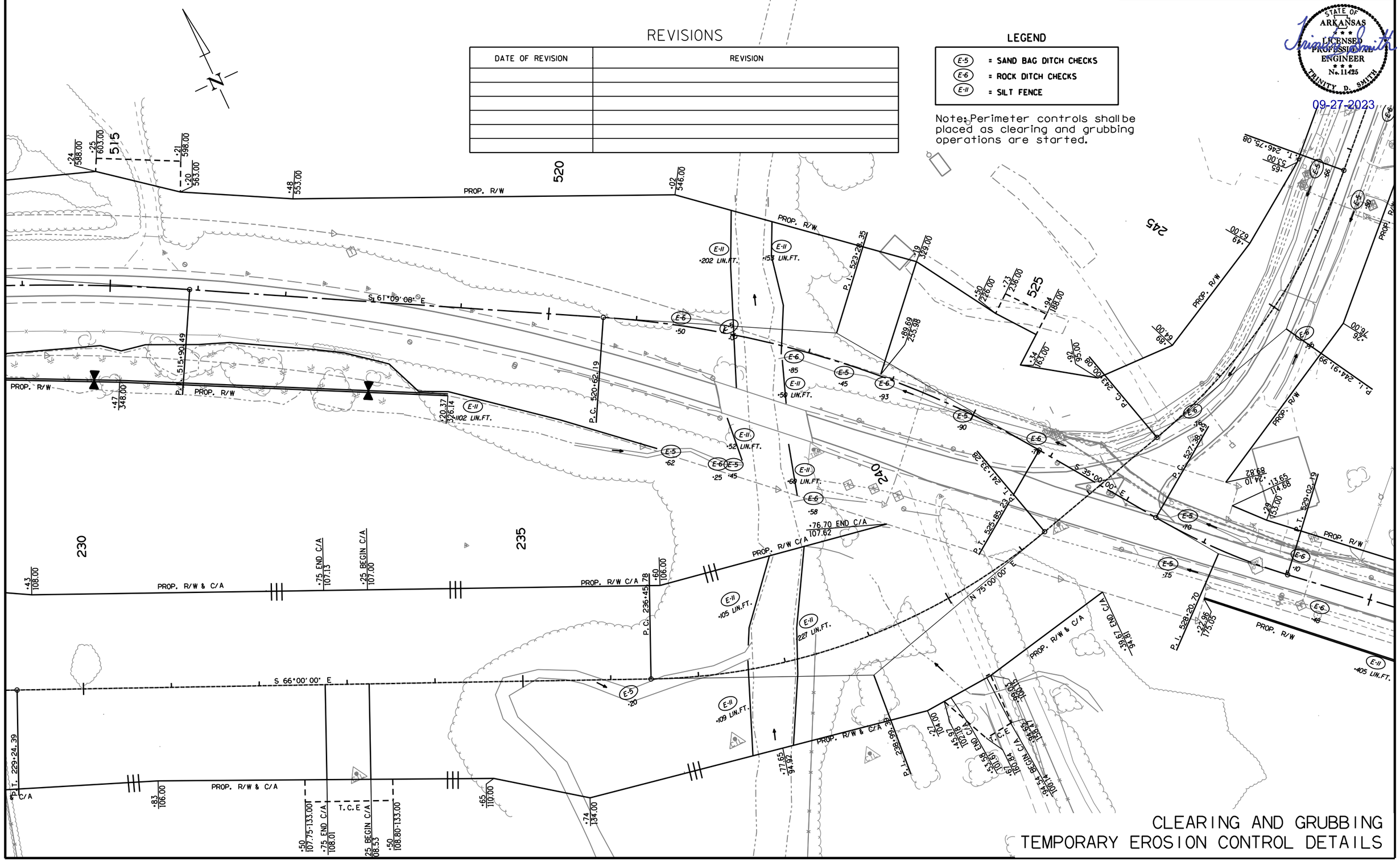

CLEARING AND GRUBBING
TEMPORARY EROSION CONTROL DETAILS

rb43088 9/15/2023
R040861.DGN

DATE REVISED	DATE REVISED	FED.RD. DIST.NO.	STATE	JOB NO.	SHEET NO.	TOTAL SHEETS
		6	ARK.	040861	25	291
		TEMPORARY EROSION CONTROL DETAILS				

STATE OF ARKANSAS
LICENSED PROFESSIONAL ENGINEER
No. 11425
TRINITY D. SMITH

09-27-2023

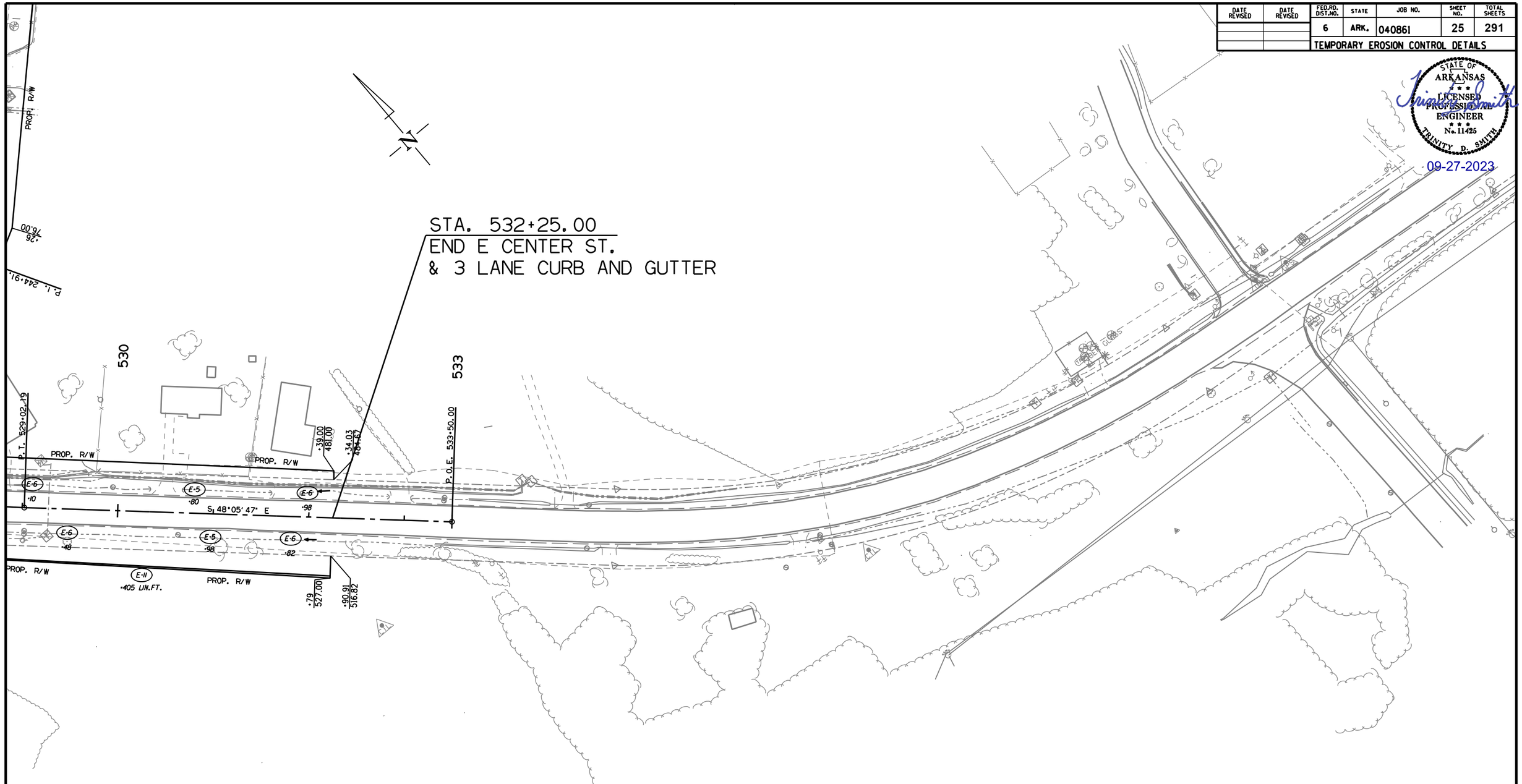

LEGEND

E-5	= SAND BAG DITCH CHECKS
E-6	= ROCK DITCH CHECKS
E-11	= SILT FENCE

Note: Perimeter controls shall be placed as clearing and grubbing operations are started.

REVISIONS

DATE OF REVISION	REVISION

CLEARING AND GRUBBING
TEMPORARY EROSION CONTROL DETAILS

rb43088 9/15/2023
R040861.DGN

DATE REVISED	DATE REVISED	FED.RD. DIST.NO.	STATE	JOB NO.	SHEET NO.	TOTAL SHEETS
		6	ARK.	040861	26	291
		TEMPORARY EROSION CONTROL DETAILS				

STATE OF ARKANSAS
LICENSED PROFESSIONAL ENGINEER
No. 11425
TRINITY D. SMITH

09-27-2023

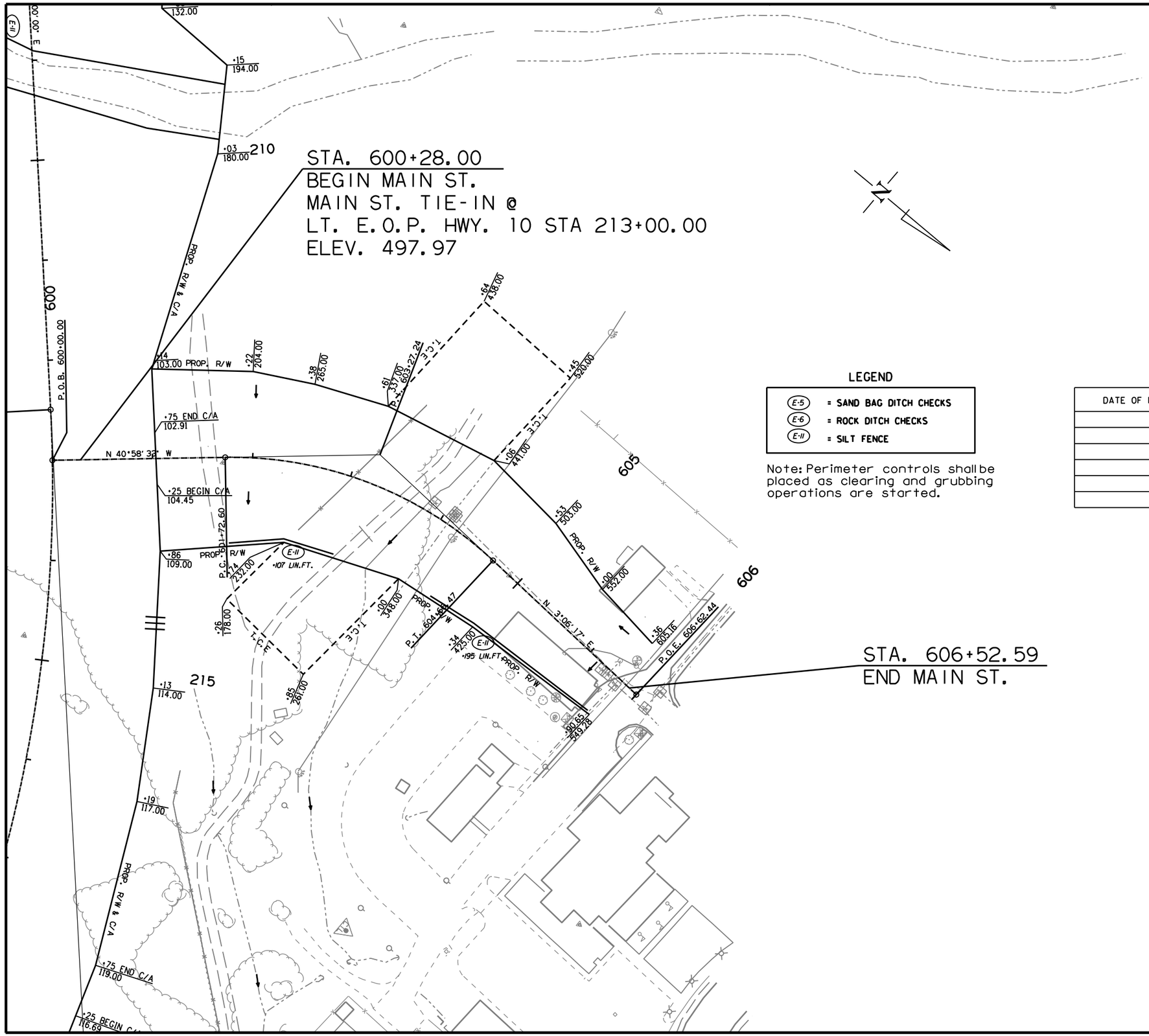

LEGEND

E-5	= SAND BAG DITCH CHECKS
E-6	= ROCK DITCH CHECKS
E-11	= SILT FENCE

Note: Perimeter controls shall be placed as clearing and grubbing operations are started.

REVISIONS

DATE OF REVISION	REVISION

CLEARING AND GRUBBING
TEMPORARY EROSION CONTROL DETAILS

rb43088 9/15/2023
R040861.DGN

DATE REVISED	DATE REVISED	FED.RD. DIST.NO.	STATE	JOB NO.	SHEET NO.	TOTAL SHEETS
		6	ARK.	040861	27	291
		TEMPORARY EROSION CONTROL DETAILS				

STATE OF ARKANSAS
LICENSED PROFESSIONAL ENGINEER
No. 11425
TRINITY D. SMITH
09-27-2023

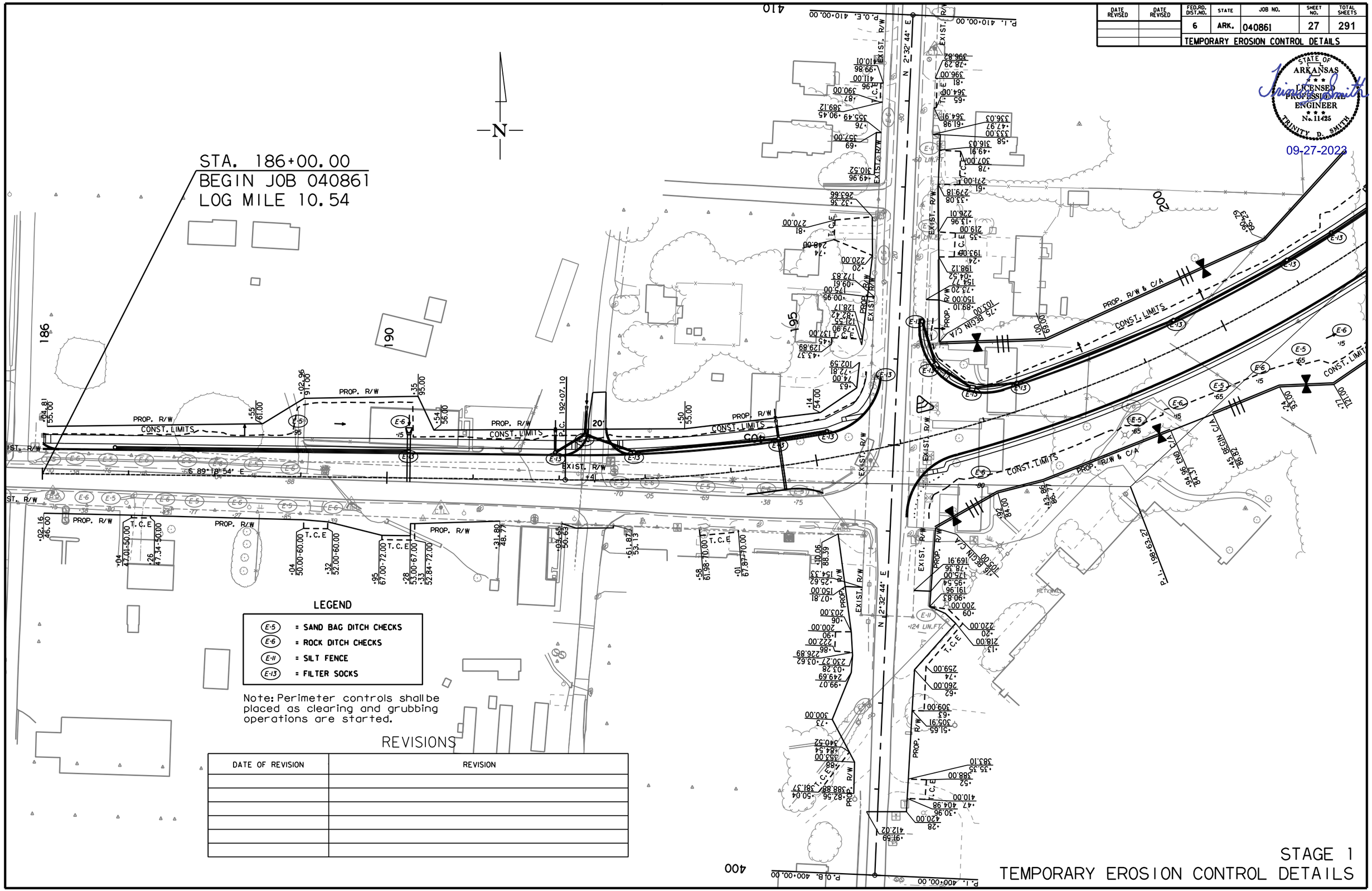

LEGEND

- E-5 = SAND BAG DITCH CHECKS
- E-6 = ROCK DITCH CHECKS
- E-11 = SILT FENCE
- E-13 = FILTER SOCKS

Note: Perimeter controls shall be placed as clearing and grubbing operations are started.

REVISIONS

DATE OF REVISION	REVISION

STAGE 1
TEMPORARY EROSION CONTROL DETAILS

rb43088 9/15/2023
R040861.DGN

DATE REVISED	DATE REVISED	FED.RD. DIST.NO.	STATE	JOB NO.	SHEET NO.	TOTAL SHEETS
		6	ARK.	040861	28	291

TEMPORARY EROSION CONTROL DETAILS

STATE OF ARKANSAS
LICENSED PROFESSIONAL ENGINEER
No. 11425
TRINITY D. SMITH

09-27-2023

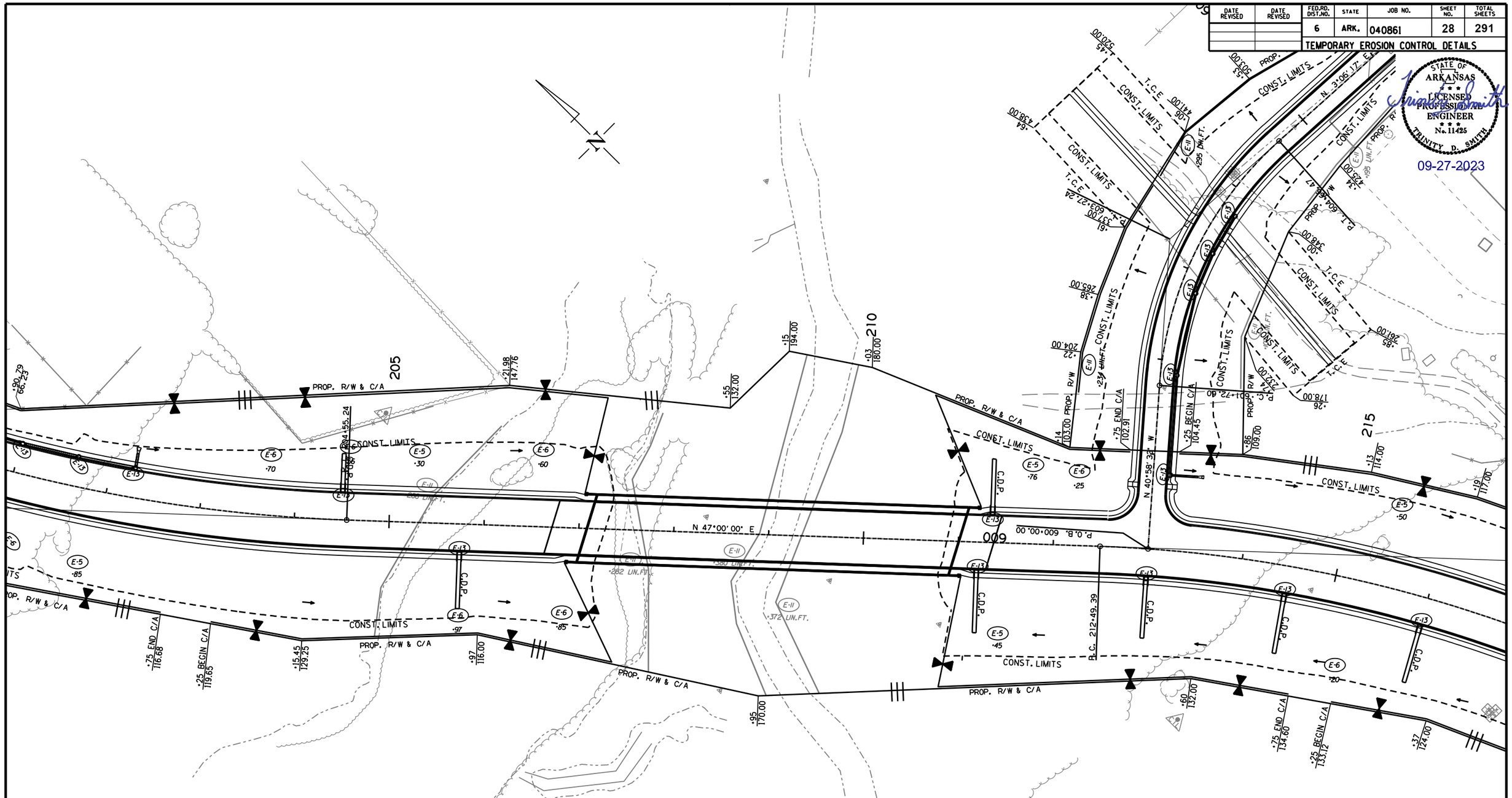

LEGEND

E-5	= SAND BAG DITCH CHECKS
E-6	= ROCK DITCH CHECKS
E-11	= SILT FENCE
E-13	= FILTER SOCKS

Note: Perimeter controls shall be placed as clearing and grubbing operations are started.

REVISIONS

DATE OF REVISION	REVISION

STAGE 1
TEMPORARY EROSION CONTROL DETAILS

rb43088 9/15/2023
R040861.DGN

DATE REVISED	DATE REVISED	FED.RD. DIST.NO.	STATE	JOB NO.	SHEET NO.	TOTAL SHEETS
		6	ARK.	040861	29	291
		TEMPORARY EROSION CONTROL DETAILS				

STATE OF ARKANSAS
LICENSED PROFESSIONAL ENGINEER
No. 11425
TRINITY D. SMITH
Trinity D. Smith
09-27-2023

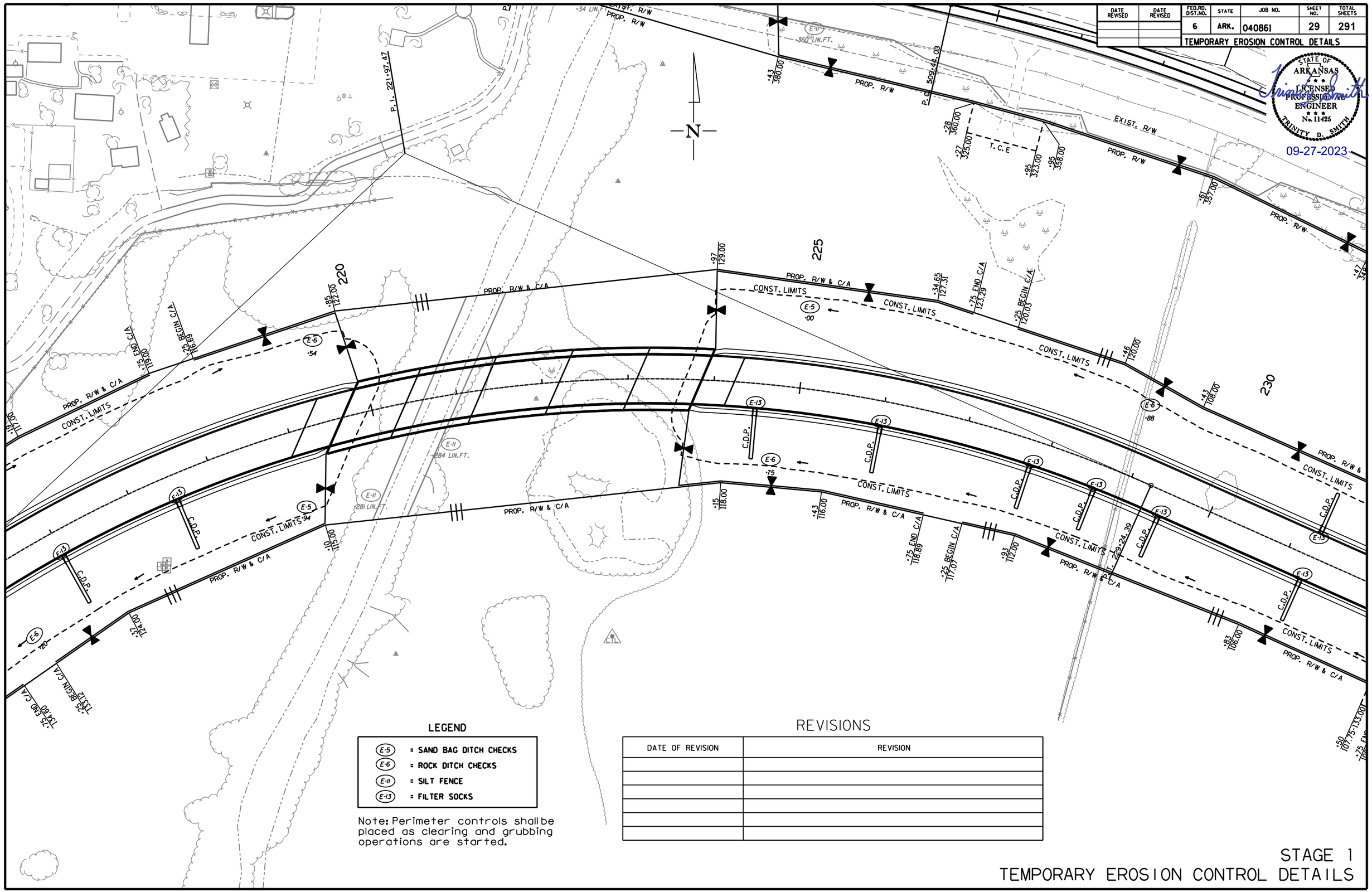

LEGEND

E-5	= SAND BAG DITCH CHECKS
E-6	= ROCK DITCH CHECKS
E-11	= SILT FENCE
E-13	= FILTER SOCKS

Note: Perimeter controls shall be placed as clearing and grubbing operations are started.

REVISIONS

DATE OF REVISION	REVISION

STAGE 1
TEMPORARY EROSION CONTROL DETAILS

rb43088 9/15/2023
R040861.DGN

DATE REVISED	DATE REVISED	FED.RD. DIST.NO.	STATE	JOB NO.	SHEET NO.	TOTAL SHEETS
		6	ARK.	040861	30	291
		TEMPORARY EROSION CONTROL DETAILS				

STATE OF ARKANSAS
LICENSED PROFESSIONAL ENGINEER
No. 11425
TRINITY D. SMITH

Trinity D. Smith

09-27-2023

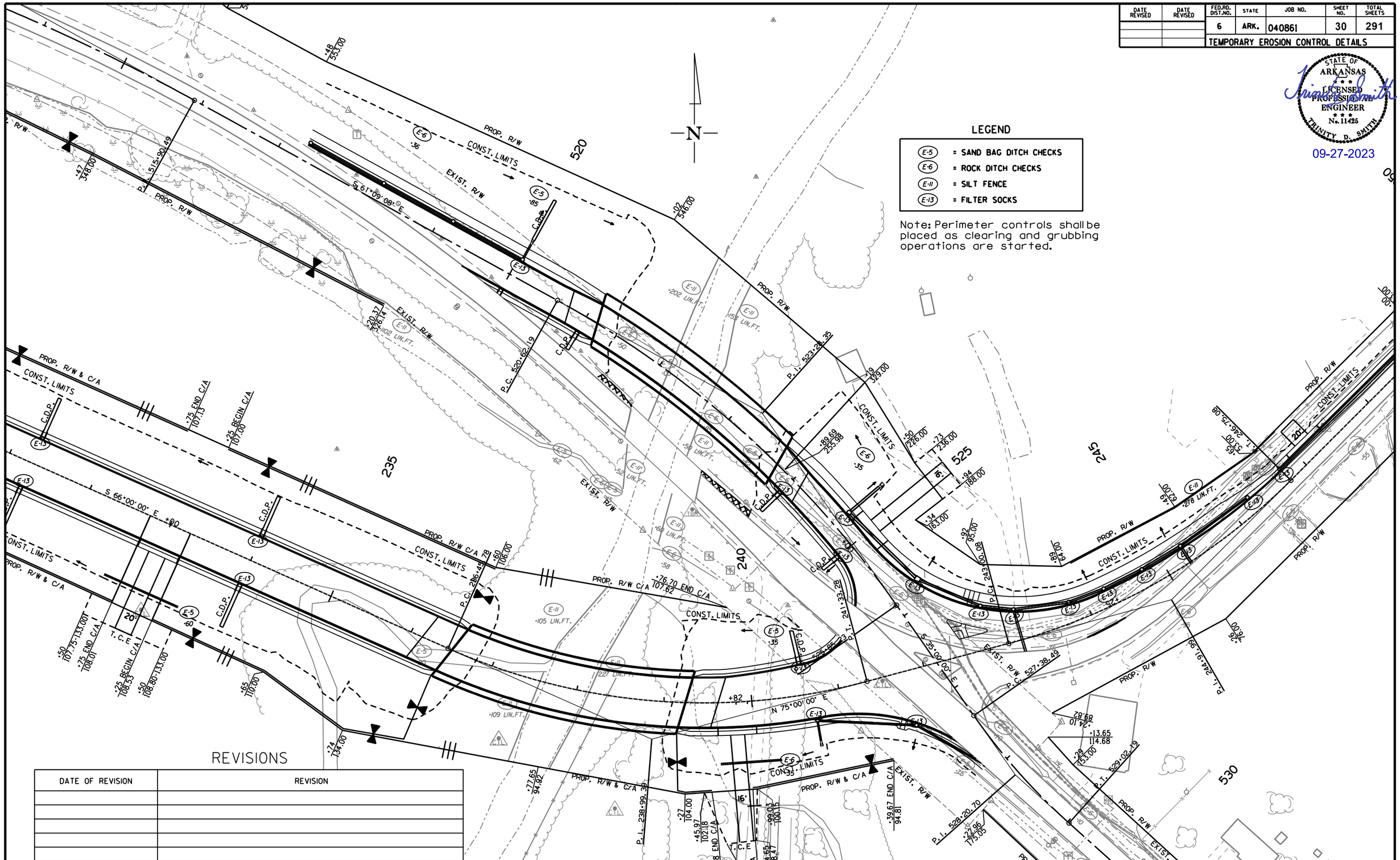

LEGEND

Note: Perimeter controls shall be placed as clearing and grubbing operations are started.

REVISIONS

DATE OF REVISION	REVISION

STAGE 1
TEMPORARY EROSION CONTROL DETAILS

rb43088 9/15/2023
R040861.DGN

DATE REVISED	DATE REVISED	FED.RD. DIST.NO.	STATE	JOB NO.	SHEET NO.	TOTAL SHEETS
		6	ARK.	040861	31	291
		TEMPORARY EROSION CONTROL DETAILS				

STATE OF ARKANSAS
LICENSED PROFESSIONAL ENGINEER
No. 11425
TRINITY D. SMITH

09-27-2023

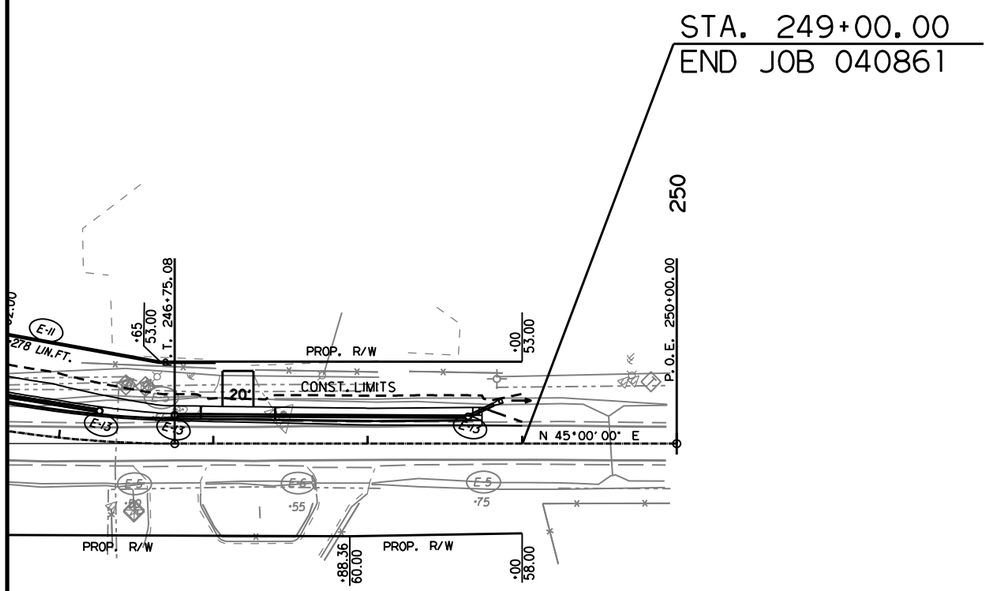

LEGEND

E-5	= SAND BAG DITCH CHECKS
E-6	= ROCK DITCH CHECKS
E-11	= SILT FENCE
E-13	= FILTER SOCKS

Note: Perimeter controls shall be placed as clearing and grubbing operations are started.

REVISIONS

DATE OF REVISION	REVISION

STAGE 1
TEMPORARY EROSION CONTROL DETAILS

rb43088 9/15/2023
R040861.DGN

DATE REVISED	DATE REVISED	FED.RD. DIST.NO.	STATE	JOB NO.	SHEET NO.	TOTAL SHEETS
		6	ARK.	040861	32	291
		TEMPORARY EROSION CONTROL DETAILS				

STATE OF ARKANSAS
LICENSED PROFESSIONAL ENGINEER
No. 11425
TRINITY D. SMITH

09-27-2023

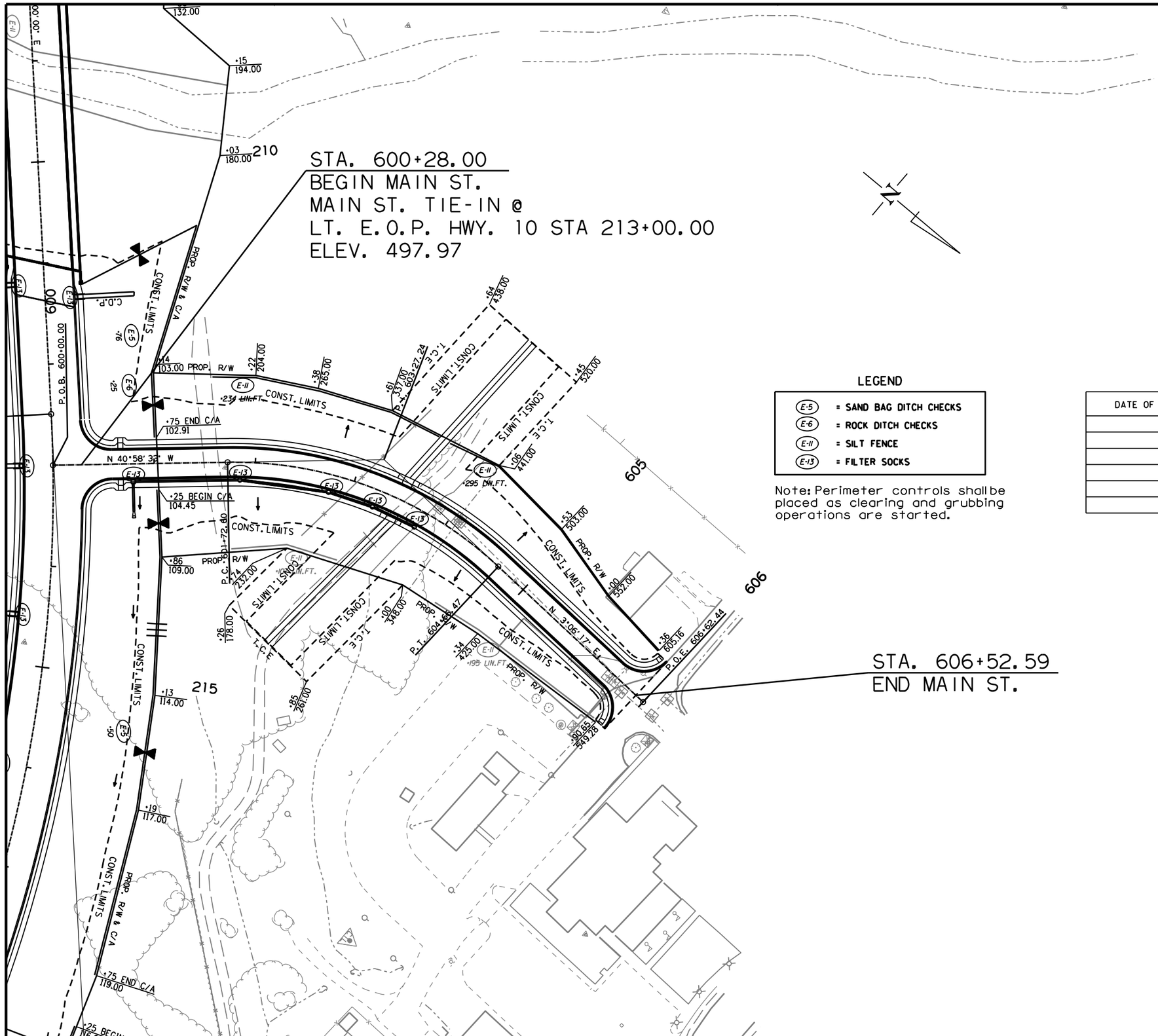

LEGEND

E-5	= SAND BAG DITCH CHECKS
E-6	= ROCK DITCH CHECKS
E-11	= SILT FENCE
E-13	= FILTER SOCKS

Note: Perimeter controls shall be placed as clearing and grubbing operations are started.

REVISIONS

DATE OF REVISION	REVISION

STAGE 1
TEMPORARY EROSION CONTROL DETAILS

rb43088 9/15/2023
R040861.DGN

DATE REVISED	DATE REVISED	FED.RD. DIST.NO.	STATE	JOB NO.	SHEET NO.	TOTAL SHEETS
		6	ARK.	040861	33	291
		TEMPORARY EROSION CONTROL DETAILS				

STATE OF ARKANSAS
LICENSED PROFESSIONAL ENGINEER
No. 11425
TRINITY D. SMITH
09-27-2023

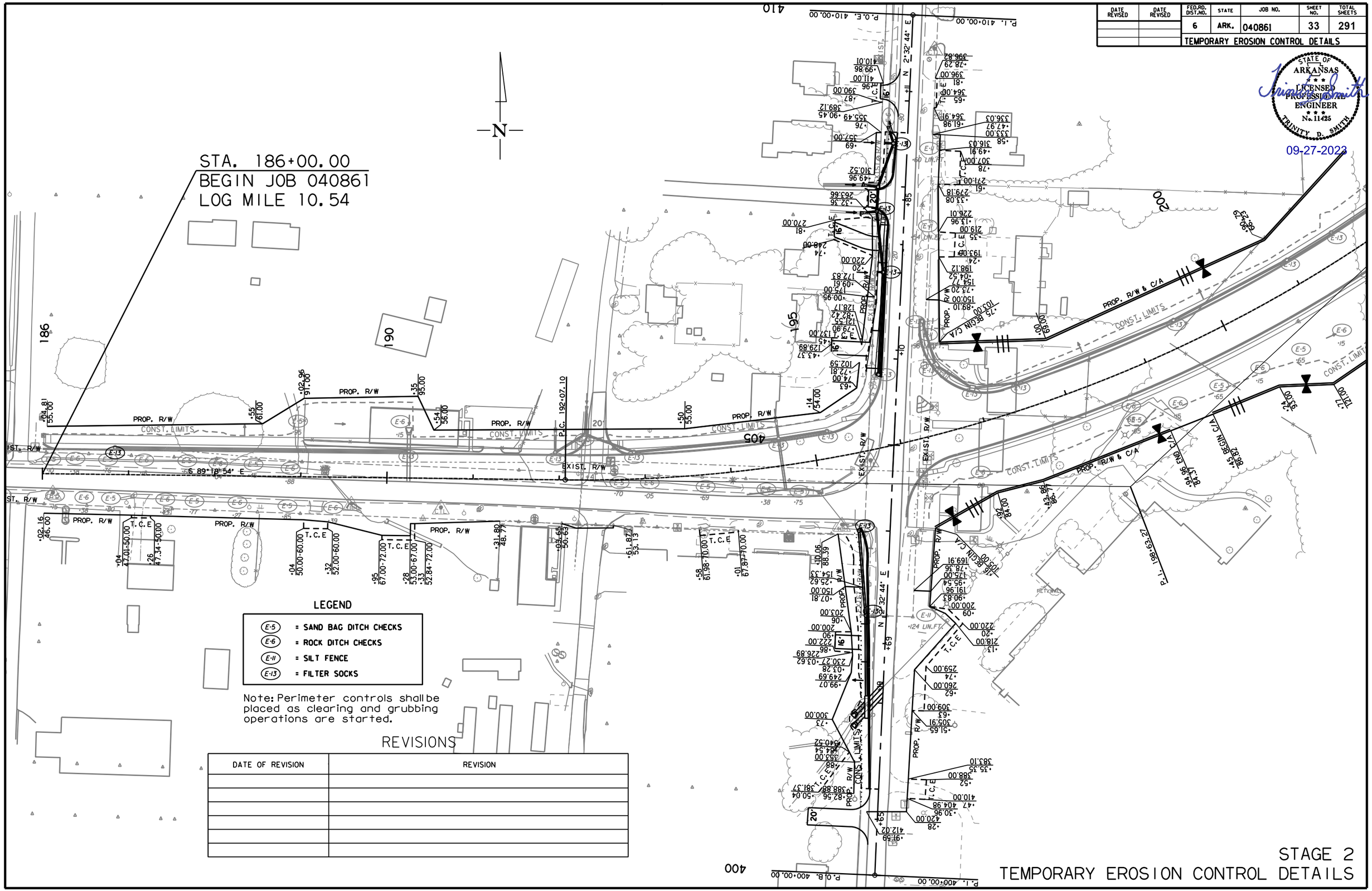

REVISIONS

DATE OF REVISION	REVISION

STAGE 2
TEMPORARY EROSION CONTROL DETAILS

rb43088 9/15/2023
R040861.DGN

DATE REVISED	DATE REVISED	FED.RD. DIST.NO.	STATE	JOB NO.	SHEET NO.	TOTAL SHEETS
		6	ARK.	040861	34	291
		TEMPORARY EROSION CONTROL DETAILS				

STATE OF ARKANSAS
LICENSED PROFESSIONAL ENGINEER
No. 11425
TRINITY D. SMITH

09-27-2023

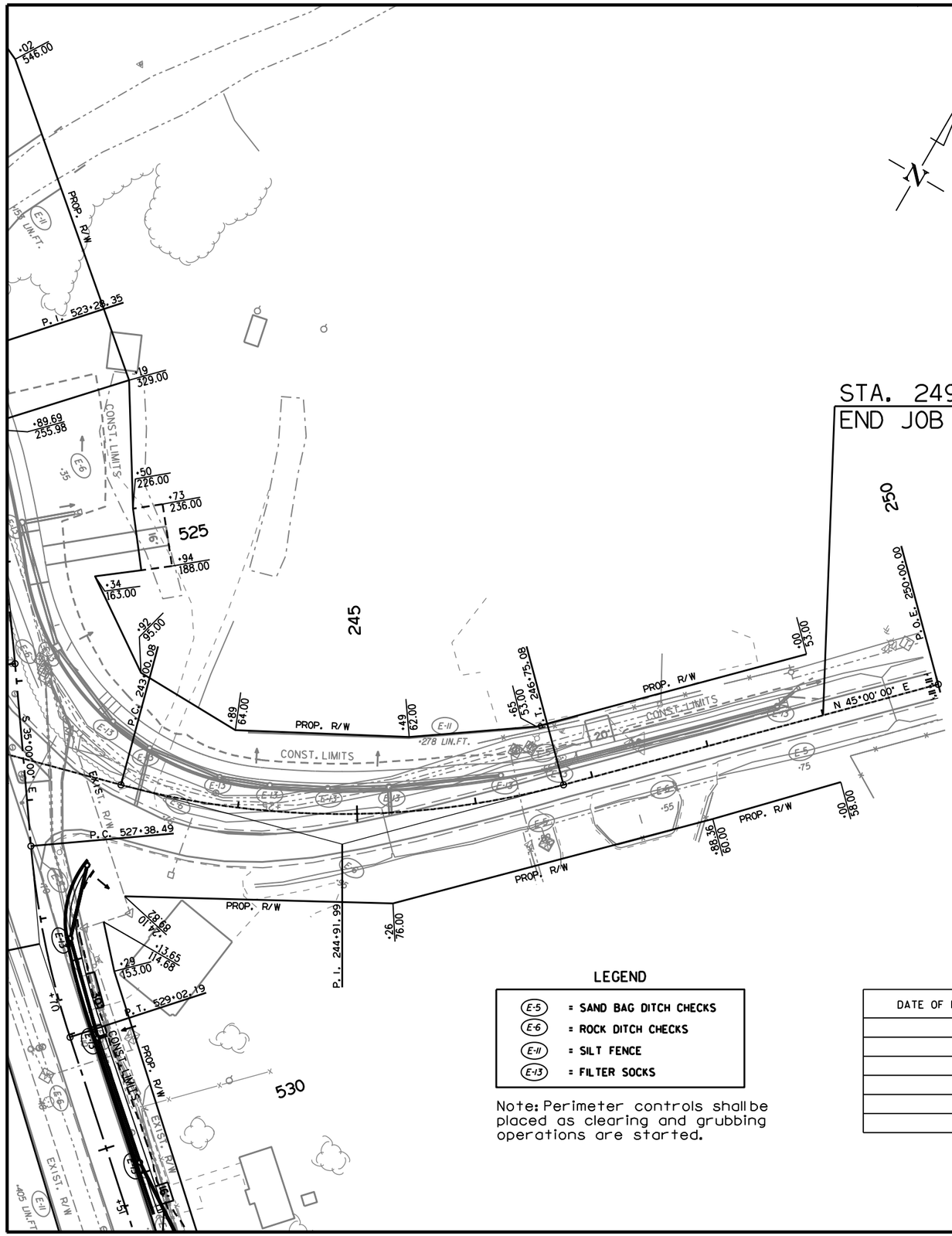

LEGEND

E-5	= SAND BAG DITCH CHECKS
E-6	= ROCK DITCH CHECKS
E-11	= SILT FENCE
E-13	= FILTER SOCKS

Note: Perimeter controls shall be placed as clearing and grubbing operations are started.

REVISIONS

DATE OF REVISION	REVISION

STAGE 2
TEMPORARY EROSION CONTROL DETAILS

rb43088 9/15/2023
R040861.DGN

DATE REVISED	DATE REVISED	FED.RD. DIST.NO.	STATE	JOB NO.	SHEET NO.	TOTAL SHEETS
		6	ARK.	040861	35	291
		TEMPORARY EROSION CONTROL DETAILS				

STATE OF ARKANSAS
LICENSED PROFESSIONAL ENGINEER
No. 11425
TRINITY D. SMITH

09-27-2023

LEGEND

- E-5 = SAND BAG DITCH CHECKS
- E-6 = ROCK DITCH CHECKS
- E-11 = SILT FENCE
- E-13 = FILTER SOCKS

Note: Perimeter controls shall be placed as clearing and grubbing operations are started.

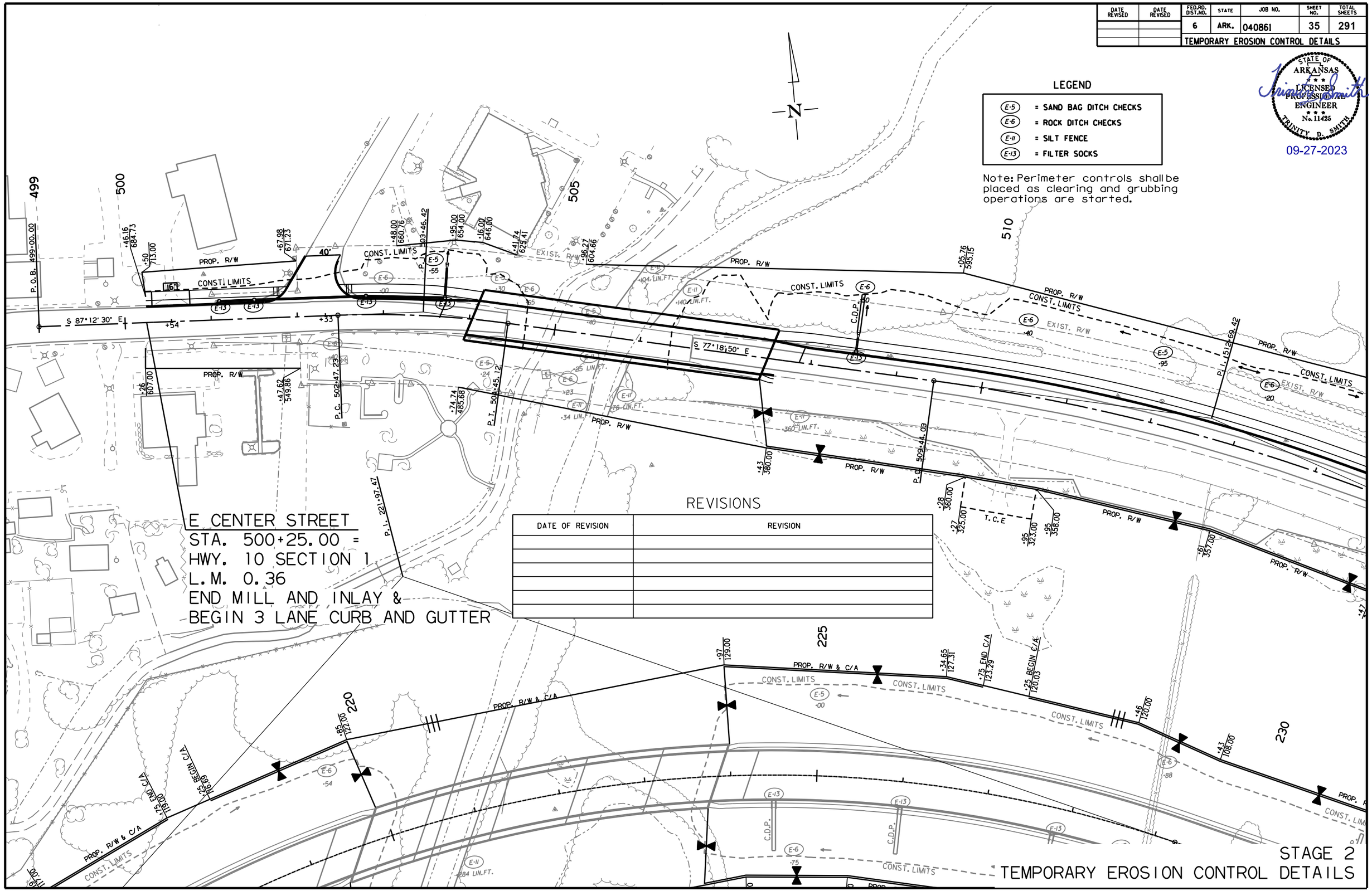

REVISIONS

DATE OF REVISION	REVISION

rb43088 9/15/2023
R040861.DGN

DATE REVISED	DATE REVISED	FED.RD. DIST.NO.	STATE	JOB NO.	SHEET NO.	TOTAL SHEETS
		6	ARK.	040861	36	291
		TEMPORARY EROSION CONTROL DETAILS				

STATE OF ARKANSAS
LICENSED PROFESSIONAL ENGINEER
No. 11425
TRINITY D. SMITH
09-27-2023

REVISIONS

DATE OF REVISION	REVISION

LEGEND

- E-5 = SAND BAG DITCH CHECKS
- E-6 = ROCK DITCH CHECKS
- E-11 = SILT FENCE
- E-13 = FILTER SOCKS

Note: Perimeter controls shall be placed as clearing and grubbing operations are started.

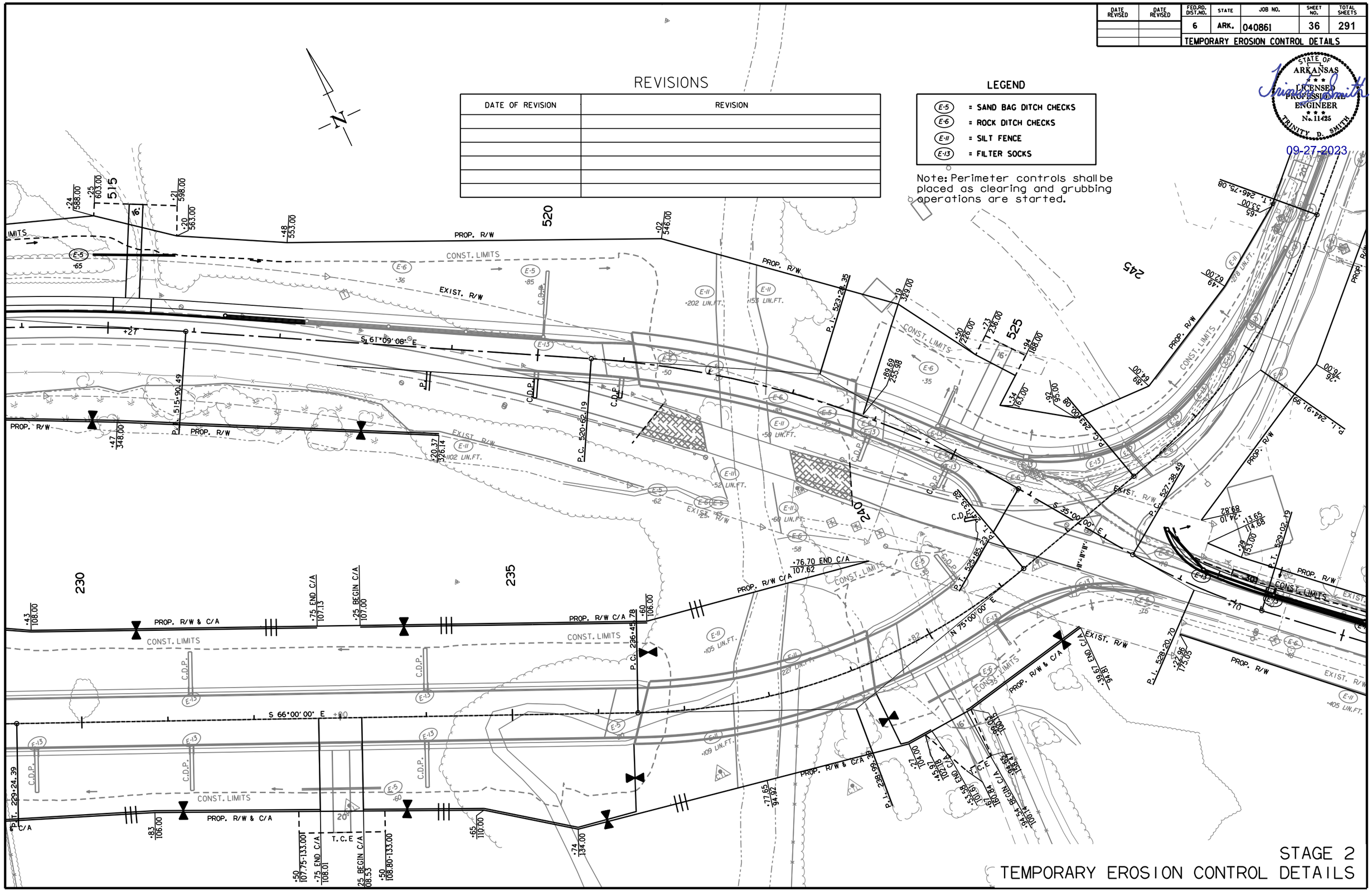

STAGE 2
TEMPORARY EROSION CONTROL DETAILS

rb43088 9/15/2023
R040861.DGN

DATE REVISED	DATE REVISED	FED.RD. DIST.NO.	STATE	JOB NO.	SHEET NO.	TOTAL SHEETS
		6	ARK.	040861	37	291

TEMPORARY EROSION CONTROL DETAILS

STATE OF ARKANSAS LICENSED PROFESSIONAL ENGINEER No. 11425 TRINITY D. SMITH

09-27-2023

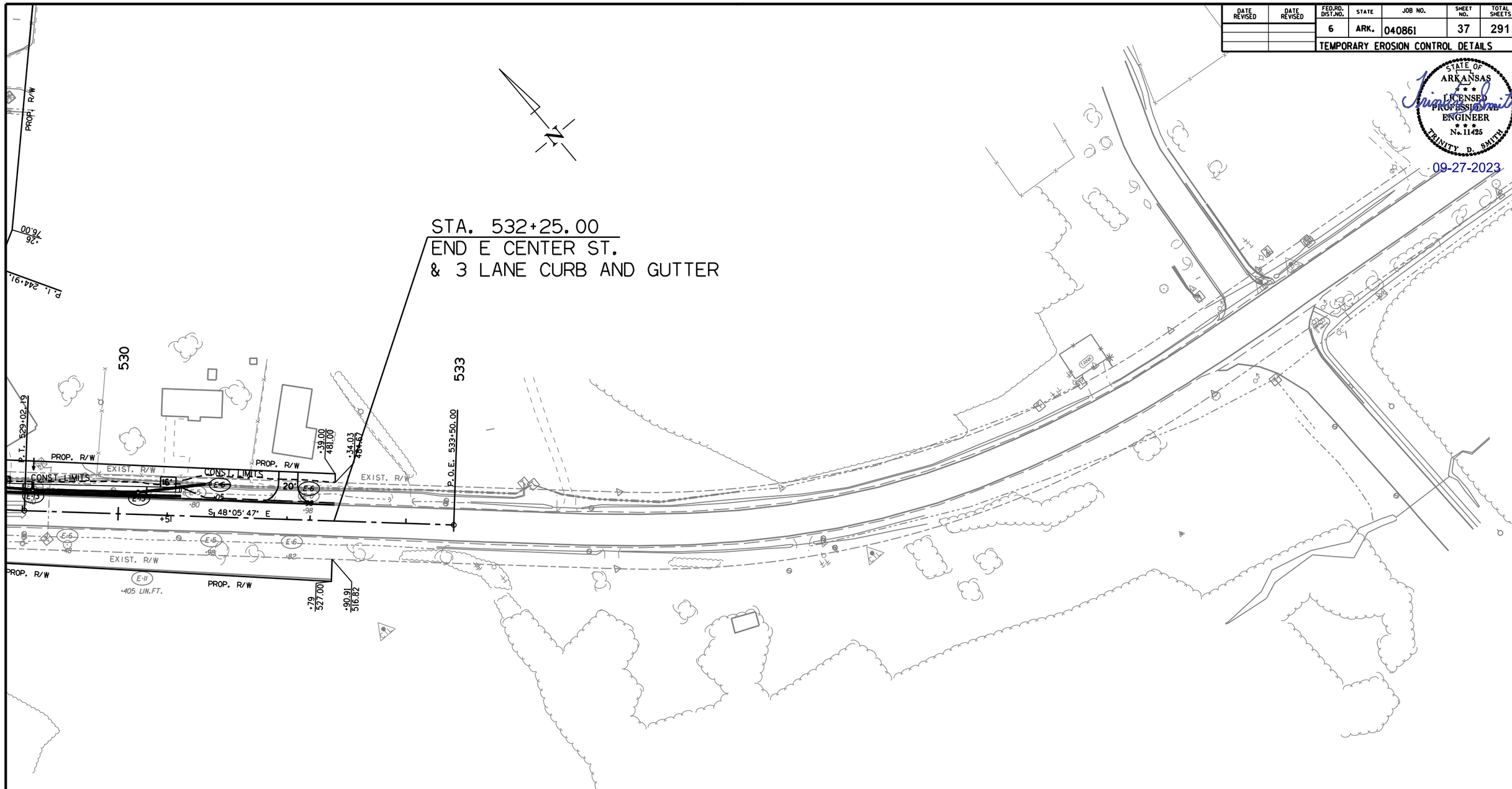

LEGEND

E-5	= SAND BAG DITCH CHECKS
E-6	= ROCK DITCH CHECKS
E-11	= SILT FENCE
E-13	= FILTER SOCKS

Note: Perimeter controls shall be placed as clearing and grubbing operations are started.

REVISIONS

DATE OF REVISION	REVISION

STAGE 2
TEMPORARY EROSION CONTROL DETAILS

rb43088 9/15/2023
R040861.DGN

DATE REVISED	DATE REVISED	FED.RD. DIST.NO.	STATE	JOB NO.	SHEET NO.	TOTAL SHEETS
		6	ARK.	040861	38	291
		TEMPORARY EROSION CONTROL DETAILS				

STATE OF ARKANSAS
LICENSED PROFESSIONAL ENGINEER
No. 11425
TRINITY D. SMITH
09-27-2023

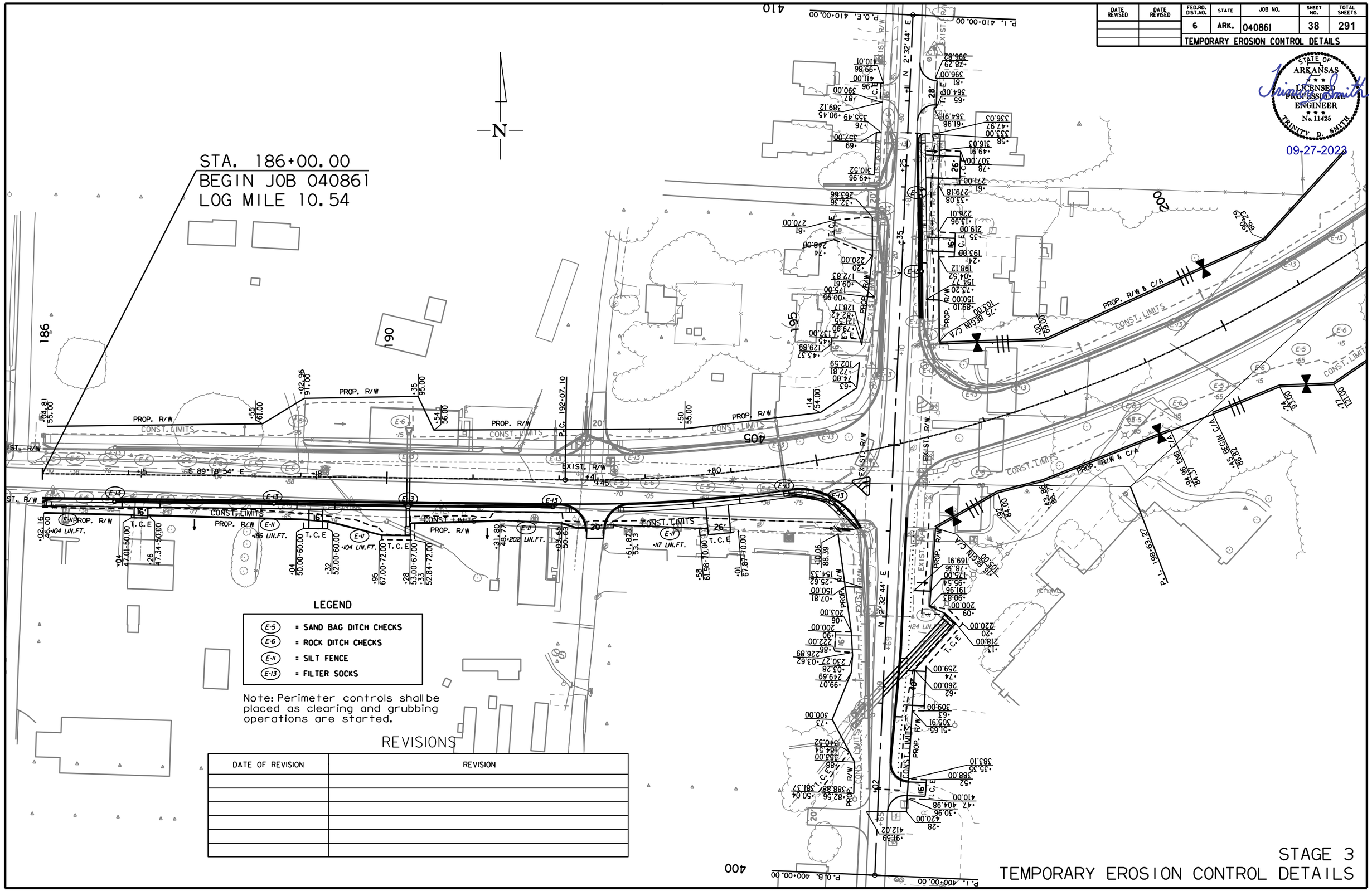

LEGEND

E-5	= SAND BAG DITCH CHECKS
E-6	= ROCK DITCH CHECKS
E-11	= SILT FENCE
E-13	= FILTER SOCKS

Note: Perimeter controls shall be placed as clearing and grubbing operations are started.

REVISIONS

DATE OF REVISION	REVISION

STAGE 3
TEMPORARY EROSION CONTROL DETAILS

rb43088 9/15/2023
R040861.DGN

DATE REVISED	DATE REVISED	FED.RD. DIST.NO.	STATE	JOB NO.	SHEET NO.	TOTAL SHEETS
		6	ARK.	040861	39	291
		TEMPORARY EROSION CONTROL DETAILS				

STATE OF ARKANSAS
LICENSED PROFESSIONAL ENGINEER
No. 11425
TRINITY D. SMITH

09-27-2023

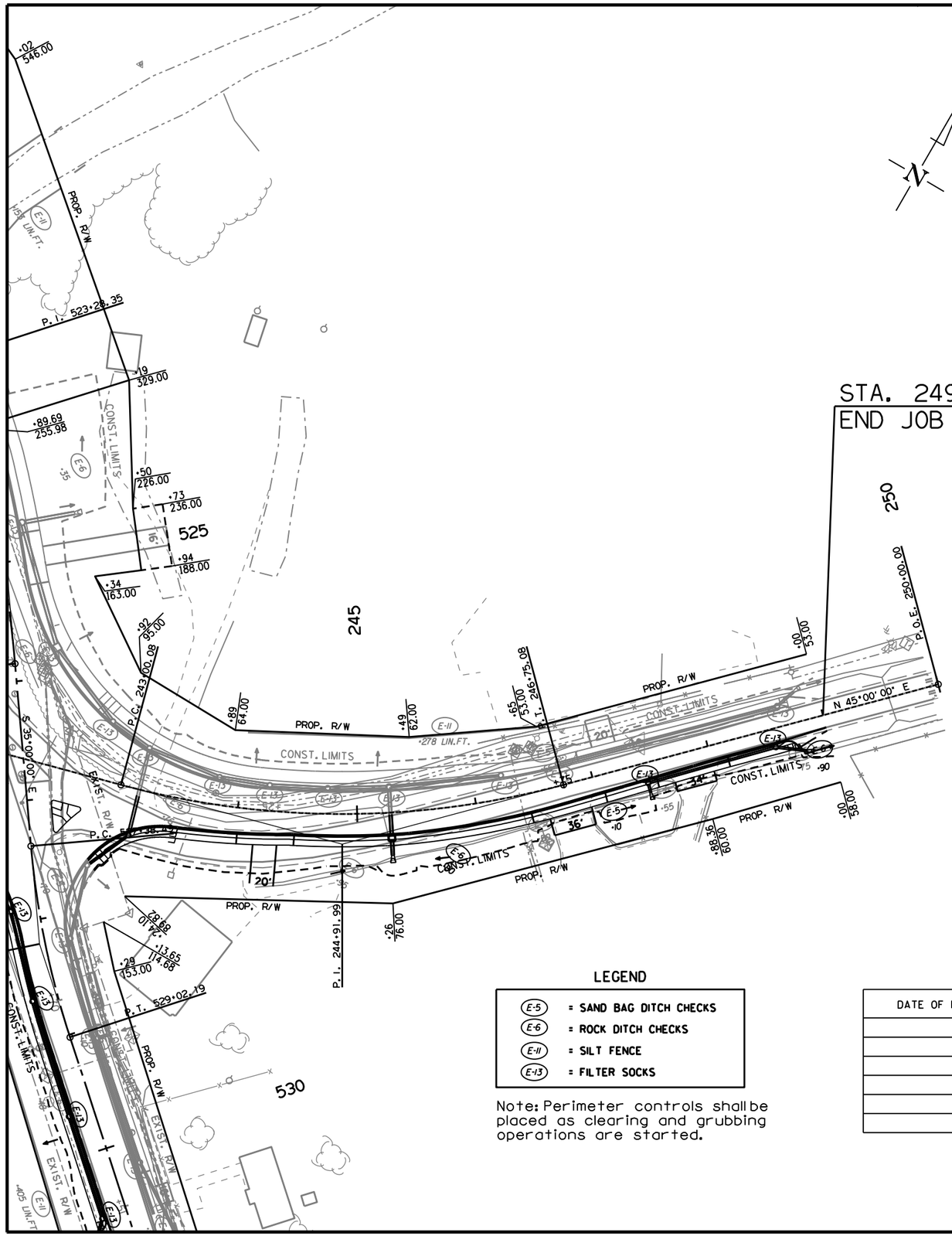

LEGEND

E-5	= SAND BAG DITCH CHECKS
E-6	= ROCK DITCH CHECKS
E-11	= SILT FENCE
E-13	= FILTER SOCKS

Note: Perimeter controls shall be placed as clearing and grubbing operations are started.

REVISIONS

DATE OF REVISION	REVISION

STAGE 3
TEMPORARY EROSION CONTROL DETAILS

rb43088 9/15/2023
R040861.DGN

DATE REVISED	DATE REVISED	FED.RD. DIST.NO.	STATE	JOB NO.	SHEET NO.	TOTAL SHEETS
		6	ARK.	040861	40	291
		TEMPORARY EROSION CONTROL DETAILS				

STATE OF ARKANSAS
LICENSED PROFESSIONAL ENGINEER
No. 11425
TRINITY D. SMITH

09-27-2023

LEGEND

- E-5 = SAND BAG DITCH CHECKS
- E-6 = ROCK DITCH CHECKS
- E-11 = SILT FENCE
- E-13 = FILTER SOCKS

Note: Perimeter controls shall be placed as clearing and grubbing operations are started.

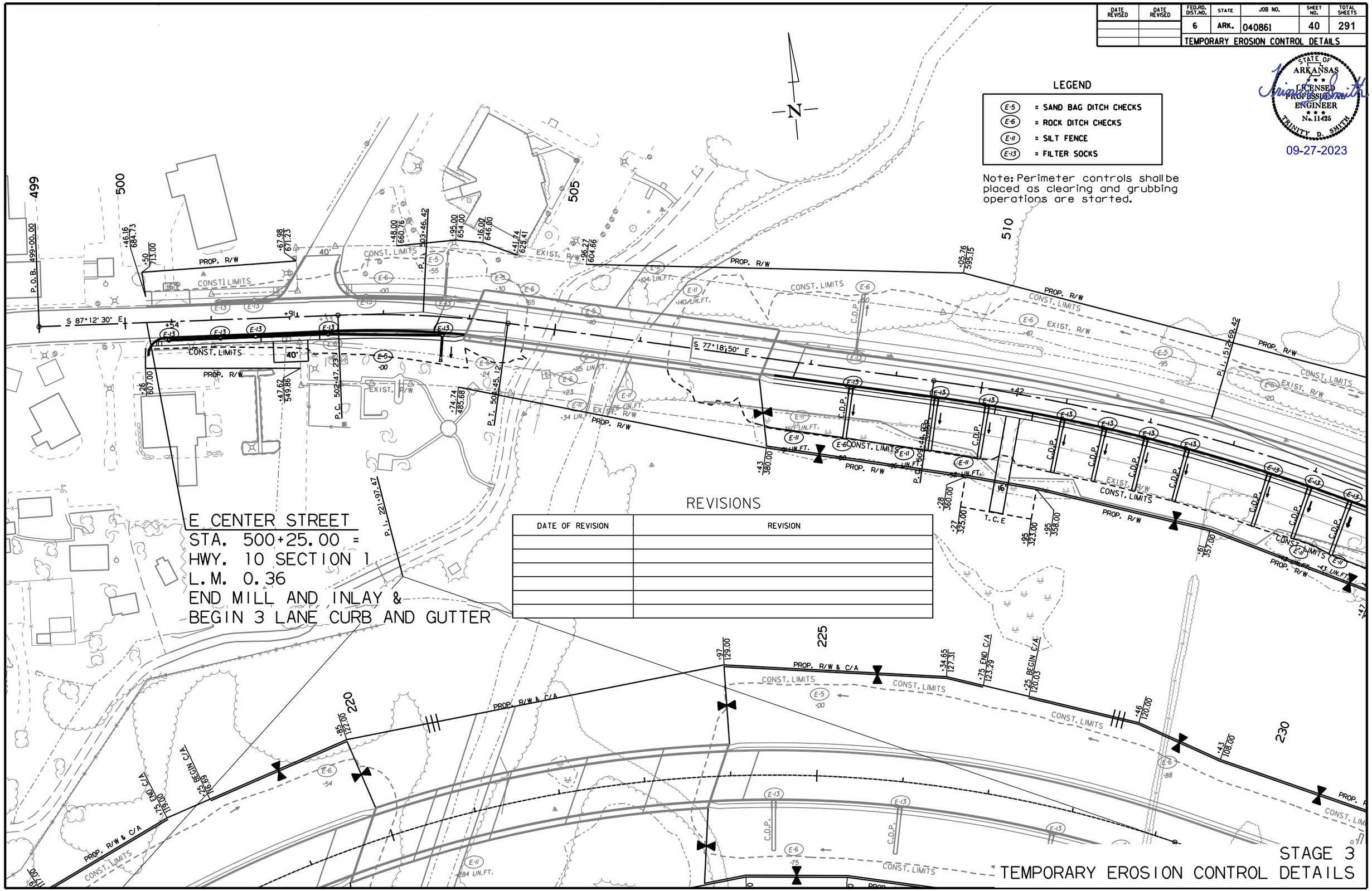

REVISIONS

DATE OF REVISION	REVISION

STAGE 3
TEMPORARY EROSION CONTROL DETAILS

rb43088 9/15/2023
R040861.DGN

DATE REVISED	DATE REVISED	FED.RD. DIST.NO.	STATE	JOB NO.	SHEET NO.	TOTAL SHEETS
		6	ARK.	040861	41	291
		TEMPORARY EROSION CONTROL DETAILS				

STATE OF ARKANSAS
LICENSED PROFESSIONAL ENGINEER
No. 11425
TRINITY D. SMITH
09-27-2023

REVISIONS

DATE OF REVISION	REVISION

LEGEND

- E-5 = SAND BAG DITCH CHECKS
- E-6 = ROCK DITCH CHECKS
- E-11 = SILT FENCE
- E-13 = FILTER SOCKS

Note: Perimeter controls shall be placed as clearing and grubbing operations are started.

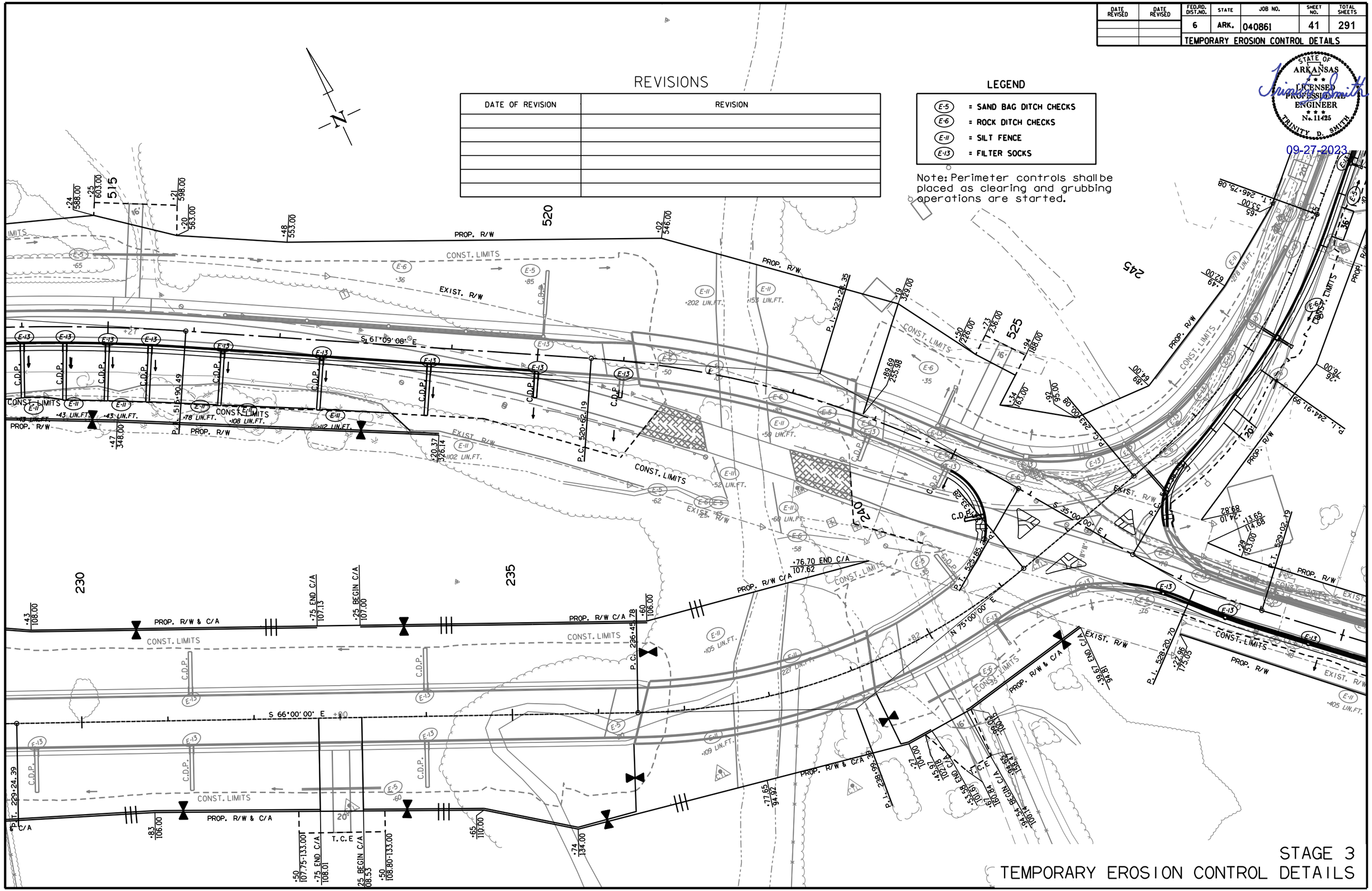

STAGE 3
TEMPORARY EROSION CONTROL DETAILS

rb43088 9/15/2023
RD4086I.DGN

DATE REVISED	DATE REVISED	FED.RD. DIST.NO.	STATE	JOB NO.	SHEET NO.	TOTAL SHEETS
		6	ARK.	040861	42	291
		TEMPORARY EROSION CONTROL DETAILS				

STATE OF ARKANSAS
LICENSED PROFESSIONAL ENGINEER
No. 11425
TRINITY D. SMITH

09-27-2023

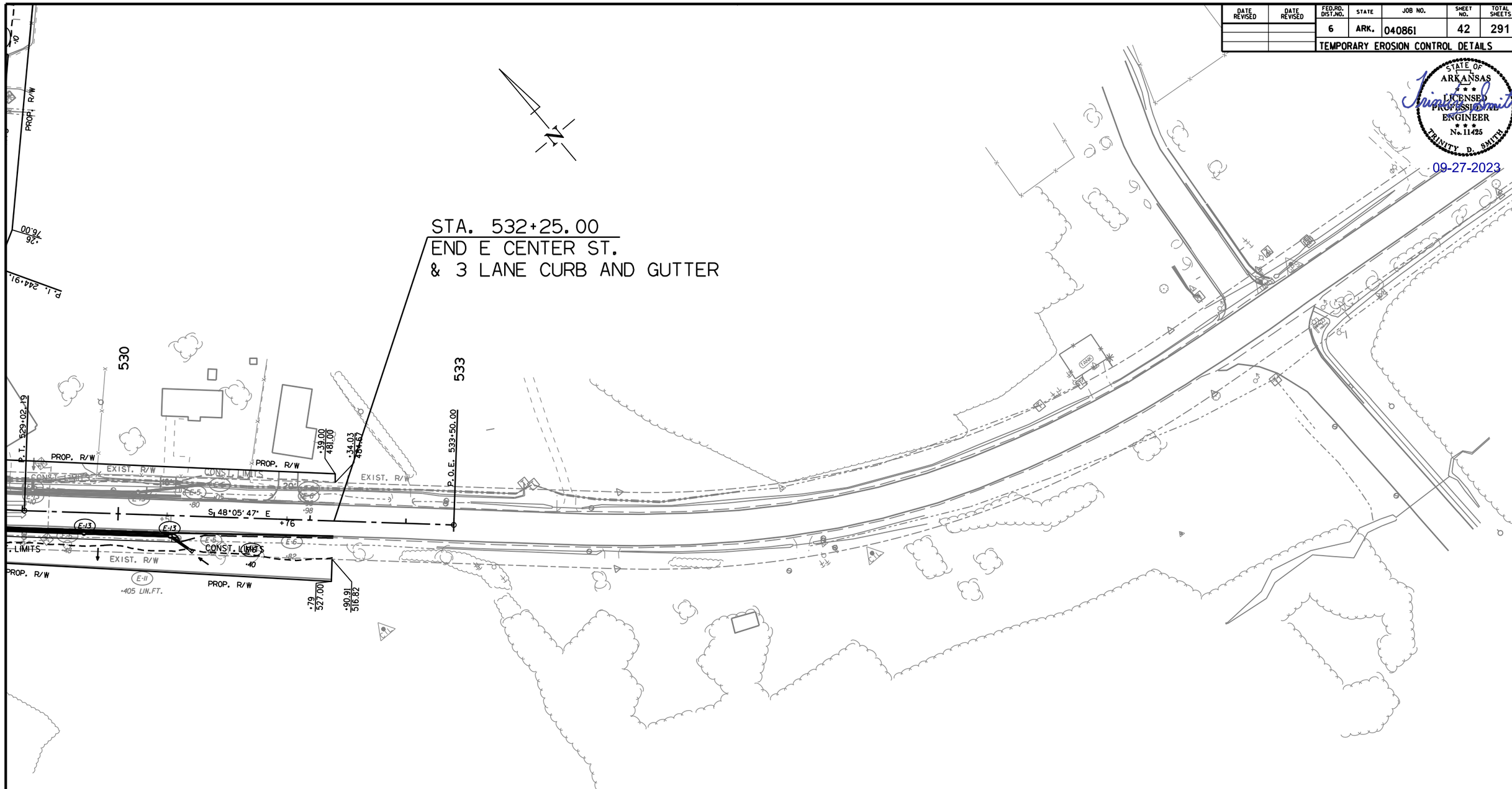

LEGEND

E-5	= SAND BAG DITCH CHECKS
E-6	= ROCK DITCH CHECKS
E-11	= SILT FENCE
E-13	= FILTER SOCKS

Note: Perimeter controls shall be placed as clearing and grubbing operations are started.

REVISIONS

DATE OF REVISION	REVISION

STAGE 3
TEMPORARY EROSION CONTROL DETAILS

rb43088 9/15/2023
R040861.DGN

DATE REVISED	DATE REVISED	FED.RD. DIST.NO.	STATE	JOB NO.	SHEET NO.	TOTAL SHEETS
		6	ARK.	040861	43	291
		MAINTENANCE OF TRAFFIC DETAILS				

STATE OF ARKANSAS
LICENSED PROFESSIONAL ENGINEER
No. 11425
TRINITY D. SMITH

09-27-2023

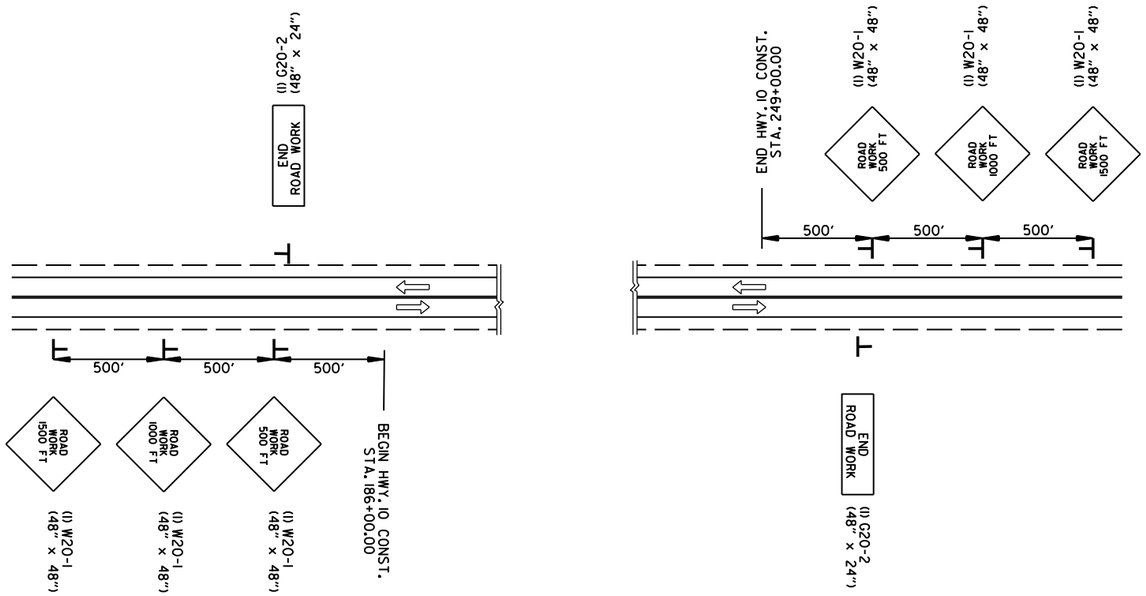

ADVANCE WARNING
(ALL STAGES)

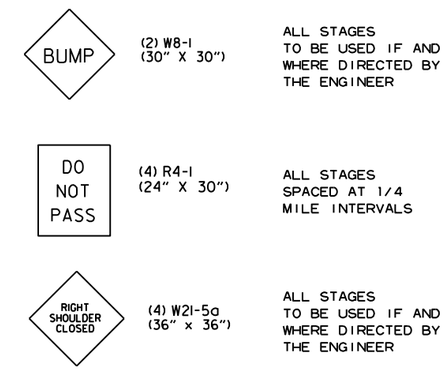

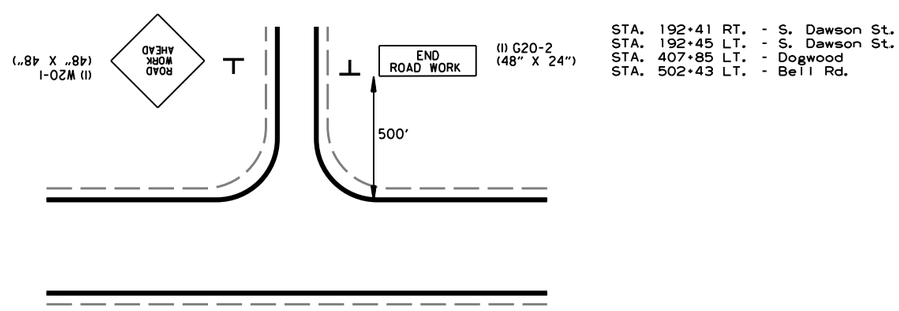

ADVANCE WARNING - SIDE ROADS
(ALL STAGES)

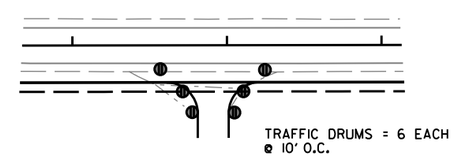

DRIVEWAY/TRAFFIC DRUM DETAIL

ADVANCE WARNING
MAINTENANCE OF TRAFFIC DETAILS

rb43088 9/21/2023
R040861.DGN

DATE REVISED	DATE REVISED	FED.RD. DIST.NO.	STATE	JOB NO.	SHEET NO.	TOTAL SHEETS
		6	ARK.	040861	44	291
		MAINTENANCE OF TRAFFIC DETAILS				

STATE OF ARKANSAS
LICENSED PROFESSIONAL ENGINEER
No. 11425
TRINITY D. SMITH

09-27-2023

STAGE 1 CONSTRUCTION SEQUENCE:

INSTALL ADVANCE WARNING SIGNS AND END ROAD WORK SIGNS AT THE BEGINNING AND END OF JOB AS SHOWN ON THE ADVANCE WARNING DETAILS. INSTALL ROAD WORK AHEAD (W20-1) SIGN ON SIDE ROADS AS SHOWN IN THE ADVANCE WARNING DETAILS.

MAINTAIN TRAFFIC IN EXISTING LANES USING TRAFFIC DRUMS SPACED 45' O.C.
USE TRAFFIC DRUMS TO DELINEATE DRIVEWAYS.

APPLY LEVELING COURSE IF AND WHERE DIRECTED BY THE ENGINEER.

INSTALL CONSTRUCTION PAVEMENT MARKINGS AND TRAFFIC DRUMS AS SHOWN IN THE STAGE 1 MAINTENANCE OF TRAFFIC DETAILS.

CONSTRUCT LT. AND RT. OF HWY. 10 FROM STA. 196+04 - STA. 241+51
AND NOTCH AND WIDEN LT. FROM STA. 242+09.27 TO STA. 249+00.
CONSTRUCT LT. AND RT. OF E. CENTER ST. FROM STA. 517+30 TO STA. 526+46.96
CONSTRUCT LT. AND RT. OF MAIN ST. FROM STA. 600+28 - STA. 606+52.59.

CONSTRUCT DRAINAGE STRUCTURES
FROM STA. 196+04 - STA. 241+51

CONSTUCT BRIDGE STRUCTURES FROM STA. 207+07.86 - STA. 211+12.53,
STA. 219+49.49 - STA. 223+86.19, STA. 236+53.86 - STA. 239+29.14,
AND STA. 521+13.86 - STA. 523+76.14
AS SHOWN ON THE BRIDGE STAGE CONSTRUCTION DETAILS.

MAINTENANCE OF TRAFFIC - STAGE 1 QUANTITIES

SIGNS = 646 SQ. FT.
TRAFFIC DRUMS = 91 EACH
CONSTRUCTION PAVEMENT MARKINGS = 2,879 LIN. FT.

STAGE 2 CONSTRUCTION SEQUENCE:

RETAIN ADVANCE WARNING SIGNS AND END ROAD WORK SIGNS AT THE BEGINNING AND END OF JOB AS SHOWN ON THE ADVANCE WARNING DETAILS.

APPLY CONSTRUCTION PAVEMENT MARKINGS AND TRAFFIC DRUMS AS SHOWN IN THE STAGE 2 MAINTENANCE OF TRAFFIC DETAILS.

SHIFT TRAFFIC TO STAGE 1 NEW LOCATION CONSTRUCTION.
USING TRAFFIC DRUMS SPACED 45' O.C.
USE TRAFFIC DRUMS TO DELINEATE DRIVEWAYS.

NOTCH AND WIDEN HWY. 10 ON LEFT FROM STA. 186+00.00 - STA. 196+04
AND FROM STA. 241+51 - STA. 249+00.
NOTCH AND WIDEN COKER ST. ON LEFT FROM STA. 401+00 - STA. 404+70.99
AND FROM STA. 405+29.05 - STA. 408+63.
NOTCH AND WIDEN E. CENTER ST. ON LEFT FROM STA. 500+25.00 - STA. 517+
AND FROM STA. 527+54.00 - STA. 532+25.00.

CONSTRUCT DRAINAGE STRUCTURES LEFT OF CENTERLINE
FROM STA. 186+00.00 - STA. 196+04
AND FROM STA. 241+51 - STA. 249+00.

CONSTRUCT BRIDGE STRUCTURE FROM STA. 504+03.56 - STA. 507+51.14.

MAINTENANCE OF TRAFFIC - STAGE 2 QUANTITIES

SIGNS = 796 SQ. FT.
TRAFFIC DRUMS = 122 EACH
CONSTRUCTION PAVEMENT MARKINGS = 40,105 LIN. FT.
CONSTRUCTION PAVEMENT MARKINGS (ARROWS) = 4 EACH

STAGE 3 CONSTRUCTION SEQUENCE:

RETAIN ADVANCE WARNING SIGNS AND END ROAD WORK SIGNS AT THE BEGINNING AND END OF JOB AS SHOWN ON THE ADVANCE WARNING DETAILS.

APPLY CONSTRUCTION PAVEMENT MARKINGS AND TRAFFIC DRUMS AS SHOWN IN THE STAGE 3 MAINTENANCE OF TRAFFIC DETAILS.

MAINTAIN TRAFFIC IN EXISTING LANES USING TRAFFIC DRUMS SPACED 45' O.C.
USE TRAFFIC DRUMS TO DELINEATE DRIVEWAYS.

NOTCH AND WIDEN HWY. 10 ON RIGHT FROM STA. 186+00.00 - STA. 196+04
AND FROM STA. 242+09.27 - STA. 249+00.
NOTCH AND WIDEN COKER ST. ON RIGHT FROM STA. 401+00 - STA. 404+70.99
AND FROM STA. 405+29.05 - STA. 408+63.

CONSTRUCT DRAINAGE STRUCTURES RIGHT OF CENTERLINE
FROM STA. 186+00.00 - STA. 196+04
AND FROM STA. 241+51 - STA. 249+00.

APPLY FINAL 2" LIFT OF ACHM AND PLACE PERMANENT PAVEMENT MARKINGS AS SHOWN IN THE PERMANENT PAVEMENT MARKING DETAILS

MAINTENANCE OF TRAFFIC - STAGE 3 QUANTITIES

SIGNS = 646 SQ. FT.
TRAFFIC DRUMS = 179 EACH
CONSTRUCTION PAVEMENT MARKINGS = 48,723 LIN. FT.
CONSTRUCTION PAVEMENT MARKINGS (ARROWS) = 2 EACH

MAINTENANCE OF TRAFFIC DETAILS

DATE REVISED	DATE REVISED	FED.RD. DIST.NO.	STATE	JOB NO.	SHEET NO.	TOTAL SHEETS
		6	ARK.	040861	45	291
		MAINTENANCE OF TRAFFIC DETAILS				

STATE OF ARKANSAS
LICENSED PROFESSIONAL ENGINEER
No. 11425
TRINITY D. SMITH

09-27-2023

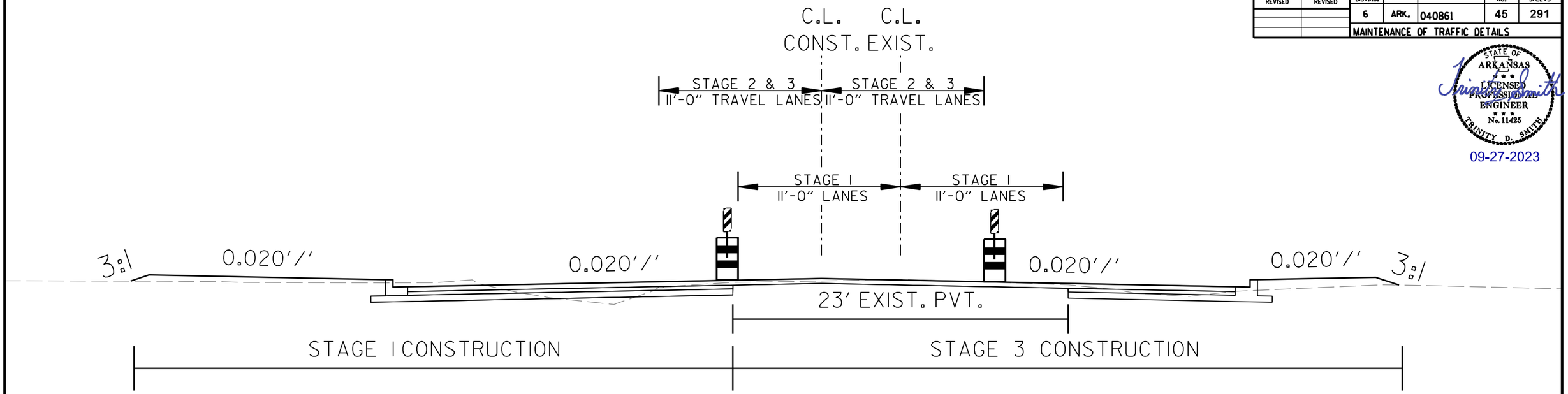

STAGE CONSTRUCTION
STA. 186+00.00 - STA. 249+00.00

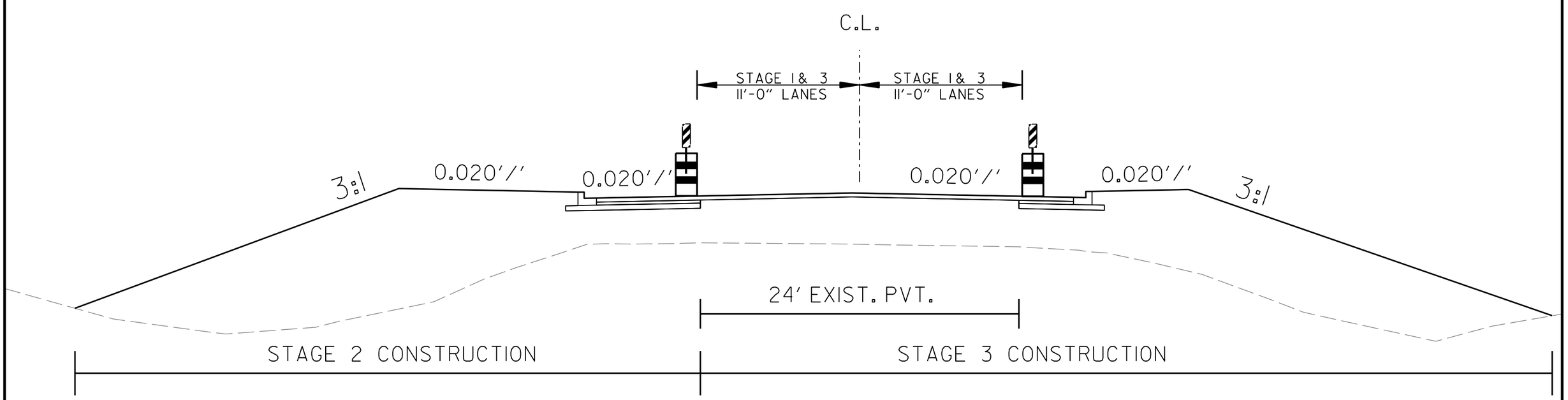

STAGE CONSTRUCTION
STA. 500+25.00 - STA. 517+30.00
STA. 527+54.00 - STA. 532+25.00

MAINTENANCE OF TRAFFIC DETAILS

rb43088 9/21/2023
R040861.DGN

DATE REVISED	DATE REVISED	FED.RD. DIST.NO.	STATE	JOB NO.	SHEET NO.	TOTAL SHEETS
		6	ARK.	040861	46	291
		MAINTENANCE OF TRAFFIC DETAILS				

STATE OF ARKANSAS
LICENSED PROFESSIONAL ENGINEER
No. 11425
TRINITY D. SMITH

09-27-2023

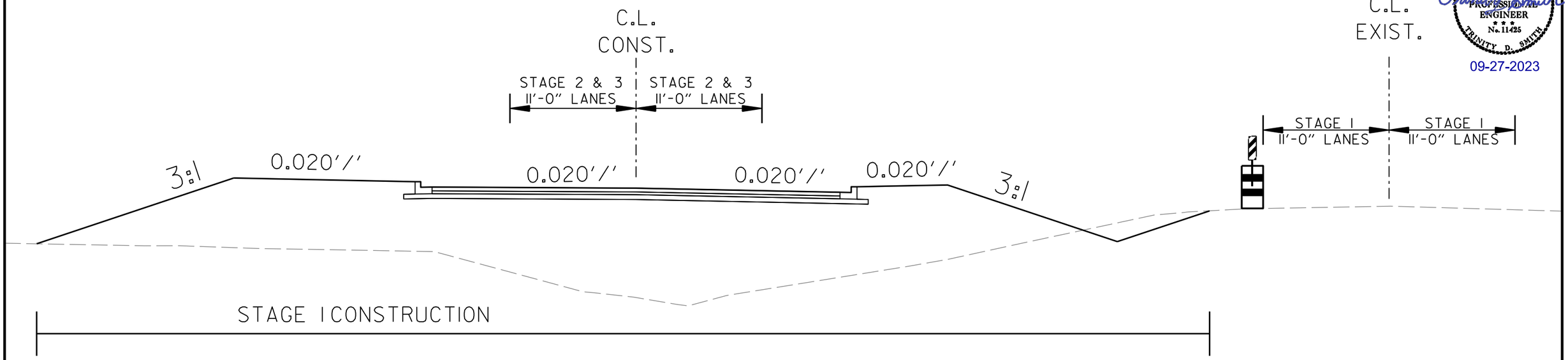

STAGE CONSTRUCTION
STA. 517+30.00 - STA. 526+46.96

24' EXIST. PVT.

rb43088 9/21/2023
R040861.DGN

MAINTENANCE OF TRAFFIC DETAILS

DATE REVISED	DATE REVISED	FED.RD. DIST.NO.	STATE	JOB NO.	SHEET NO.	TOTAL SHEETS
		6	ARK.	040861	47	291
		MAINTENANCE OF TRAFFIC DETAILS				

STATE OF ARKANSAS
LICENSED PROFESSIONAL ENGINEER
No. 11425
TRINITY D. SMITH
09-27-2023

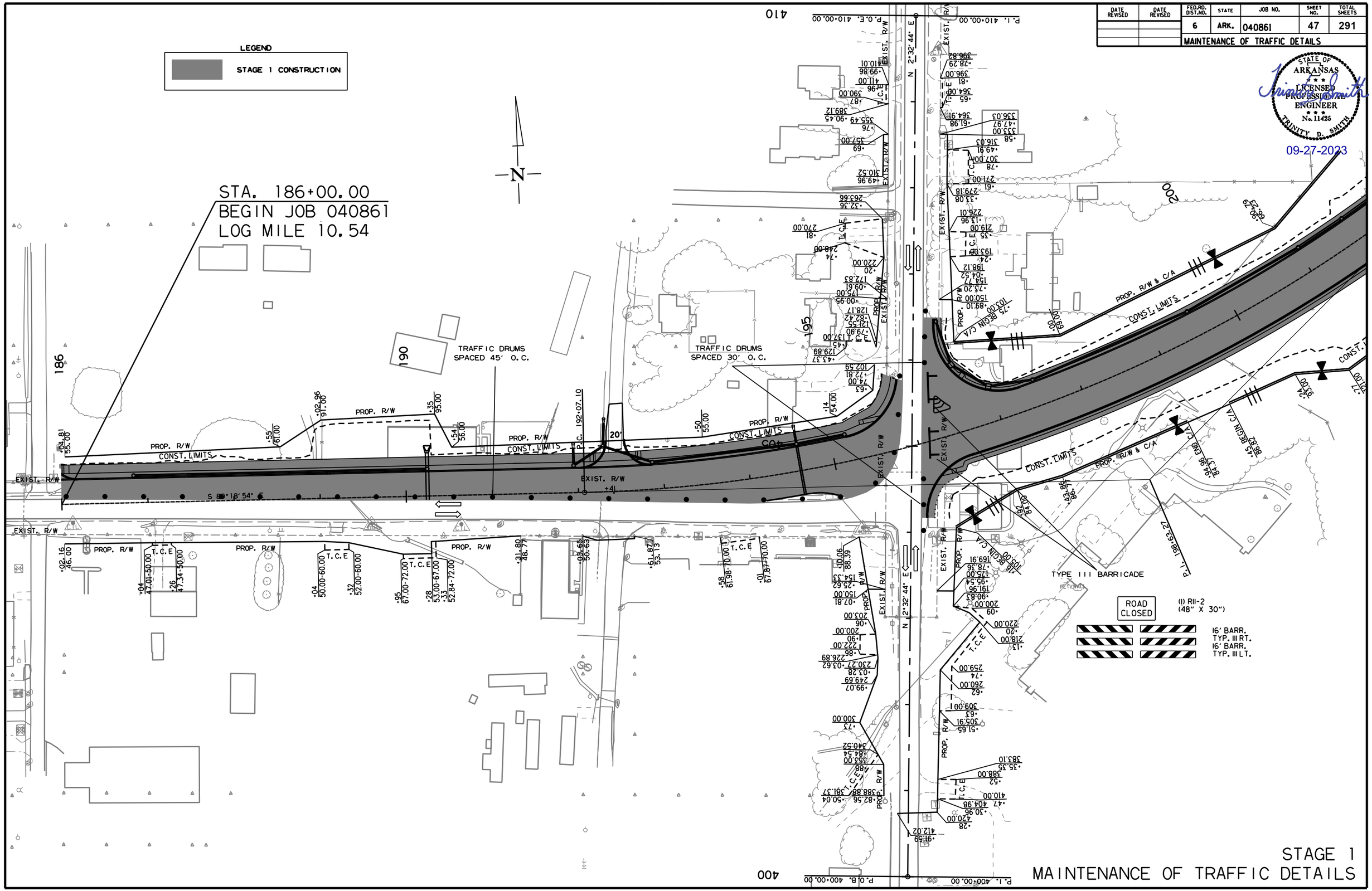

STAGE 1
MAINTENANCE OF TRAFFIC DETAILS

rb43088 9/21/2023
R040861.DGN

DATE REVISED	DATE REVISED	FED.RD. DIST.NO.	STATE	JOB NO.	SHEET NO.	TOTAL SHEETS
		6	ARK.	040861	48	291
		MAINTENANCE OF TRAFFIC DETAILS				

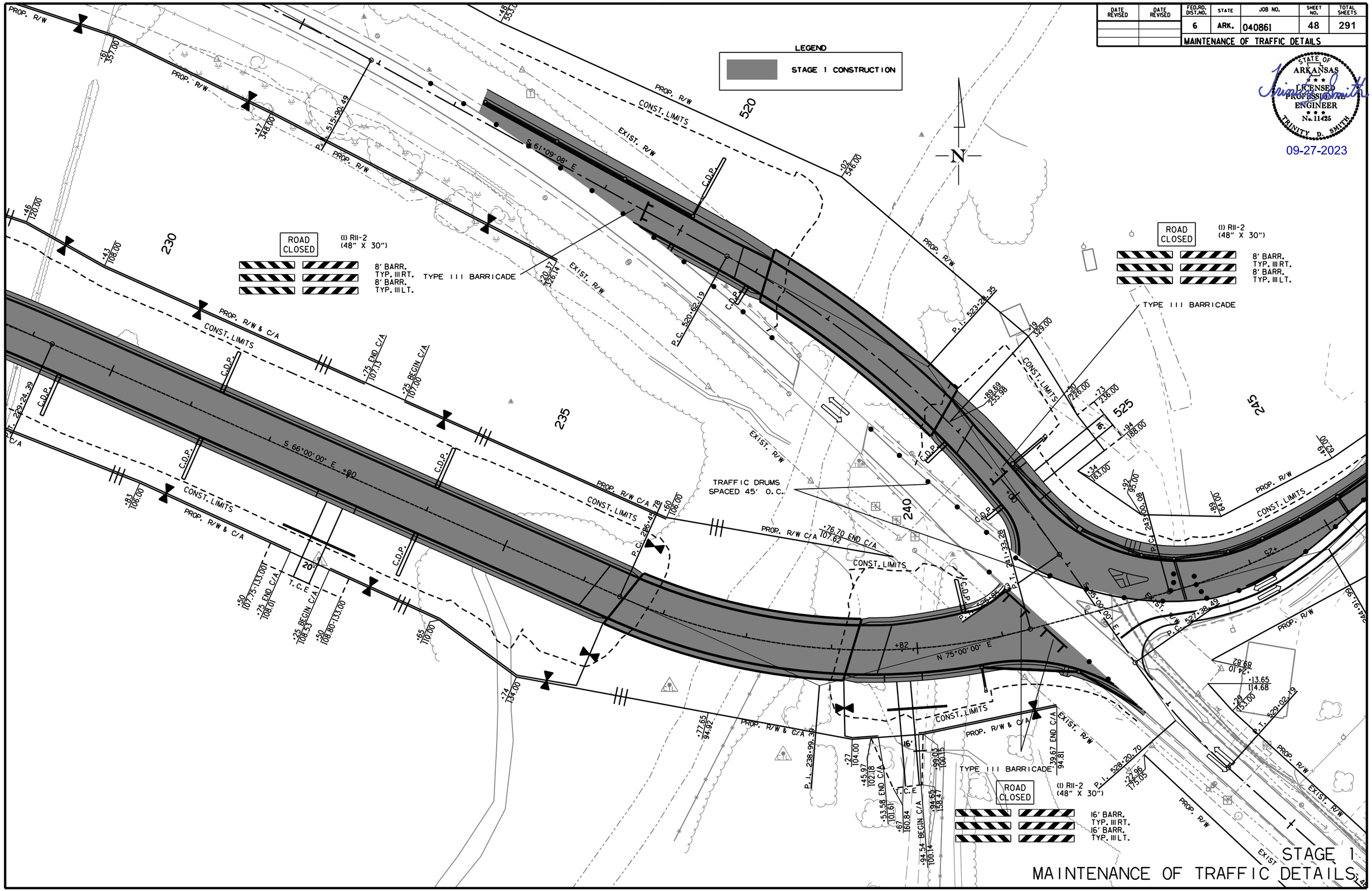

STATE OF ARKANSAS
LICENSED PROFESSIONAL ENGINEER
No. 11425
TRINITY D. SMITH
09-27-2023

STAGE 1
MAINTENANCE OF TRAFFIC DETAILS

rb43088 9/21/2023
R040861.DGN

DATE REVISED	DATE REVISED	FED.RD. DIST.NO.	STATE	JOB NO.	SHEET NO.	TOTAL SHEETS
		6	ARK.	040861	49	291
		MAINTENANCE OF TRAFFIC DETAILS				

STATE OF ARKANSAS
LICENSED PROFESSIONAL ENGINEER
No. 11425
TRINITY D. SMITH

09-27-2023

LEGEND

STAGE 1 CONSTRUCTION

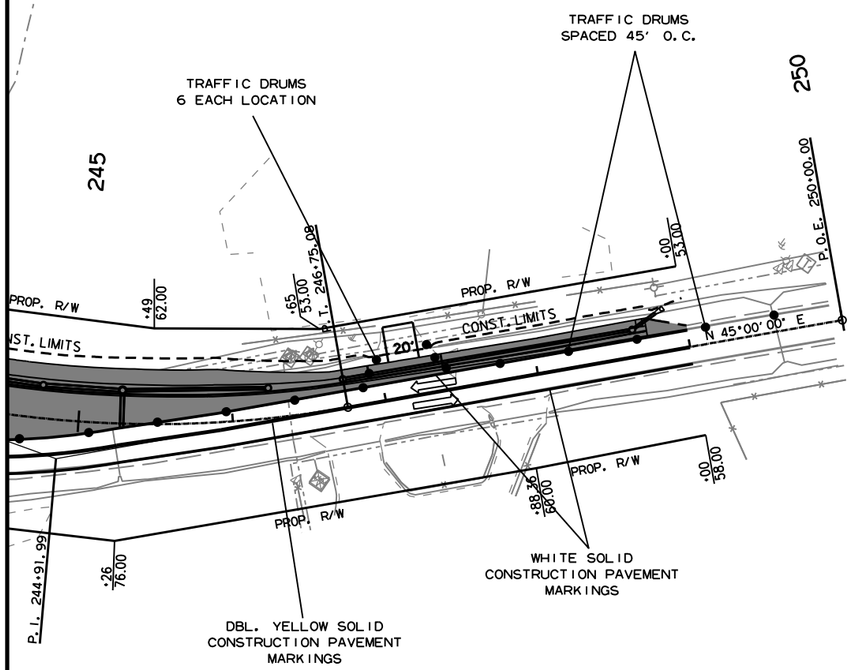

STAGE 1
MAINTENANCE OF TRAFFIC DETAILS

rb43088 9/21/2023
R040861.DGN

DATE REVISED	DATE REVISED	FED.RD. DIST.NO.	STATE	JOB NO.	SHEET NO.	TOTAL SHEETS
		6	ARK.	040861	50	291
		MAINTENANCE OF TRAFFIC DETAILS				

STATE OF ARKANSAS
LICENSED PROFESSIONAL ENGINEER
No. 11425
TRINITY D. SMITH

09-27-2023

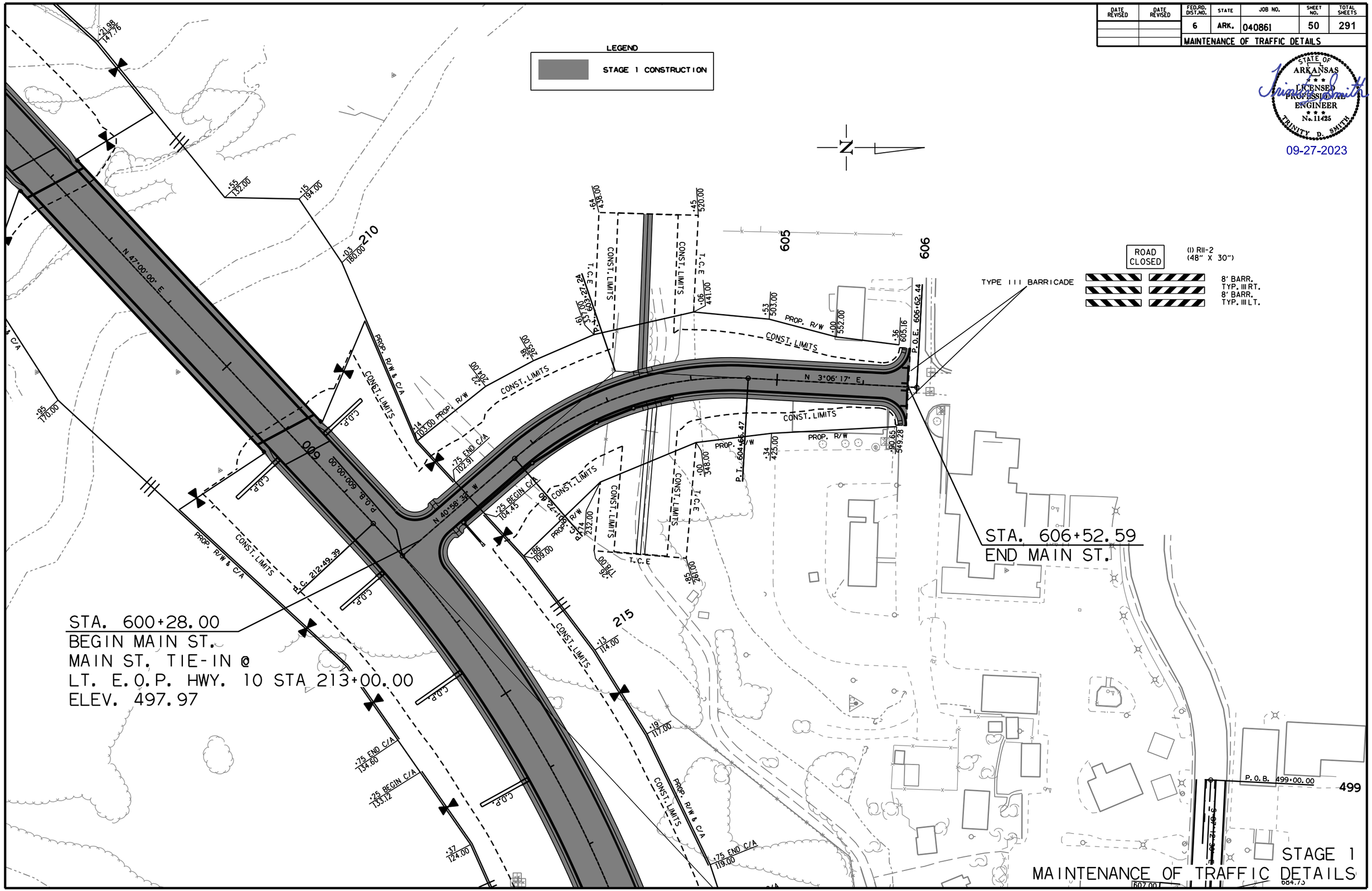

STAGE 1
MAINTENANCE OF TRAFFIC DETAILS

rb43088 9/21/2023
R040861.DGN

DATE REVISED	DATE REVISED	FED.RD. DIST.NO.	STATE	JOB NO.	SHEET NO.	TOTAL SHEETS
		6	ARK.	040861	51	291
		MAINTENANCE OF TRAFFIC DETAILS				

STATE OF ARKANSAS
LICENSED PROFESSIONAL ENGINEER
No. 11425
TRINITY D. SMITH

09-27-2023

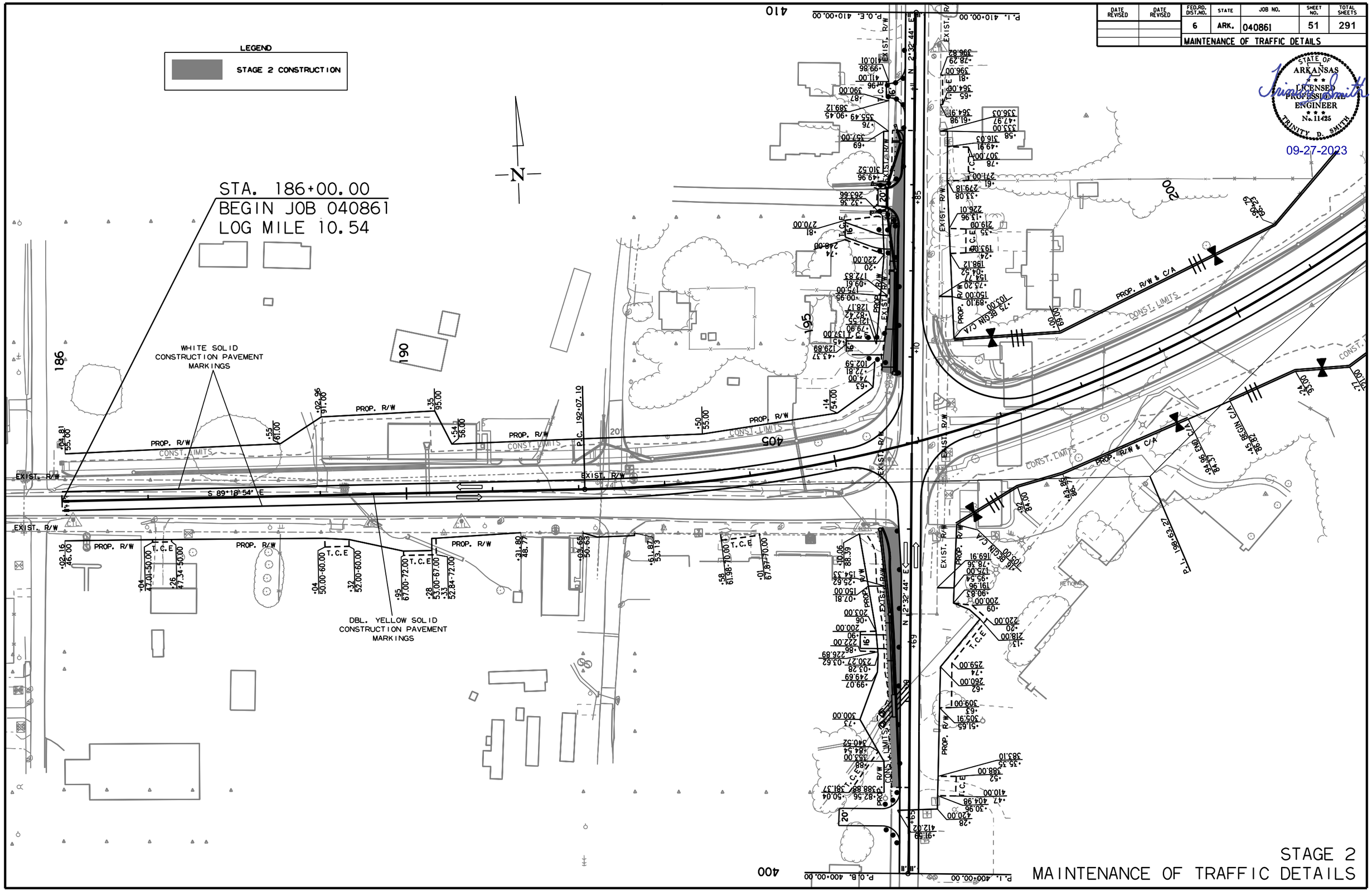

STAGE 2
MAINTENANCE OF TRAFFIC DETAILS

rb43088 9/21/2023
R040861.DGN

DATE REVISED	DATE REVISED	FED.RD. DIST.NO.	STATE	JOB NO.	SHEET NO.	TOTAL SHEETS
		6	ARK.	040861	52	291
		MAINTENANCE OF TRAFFIC DETAILS				

STATE OF ARKANSAS
LICENSED PROFESSIONAL ENGINEER
No. 11425
TRINITY D. SMITH

09-27-2023

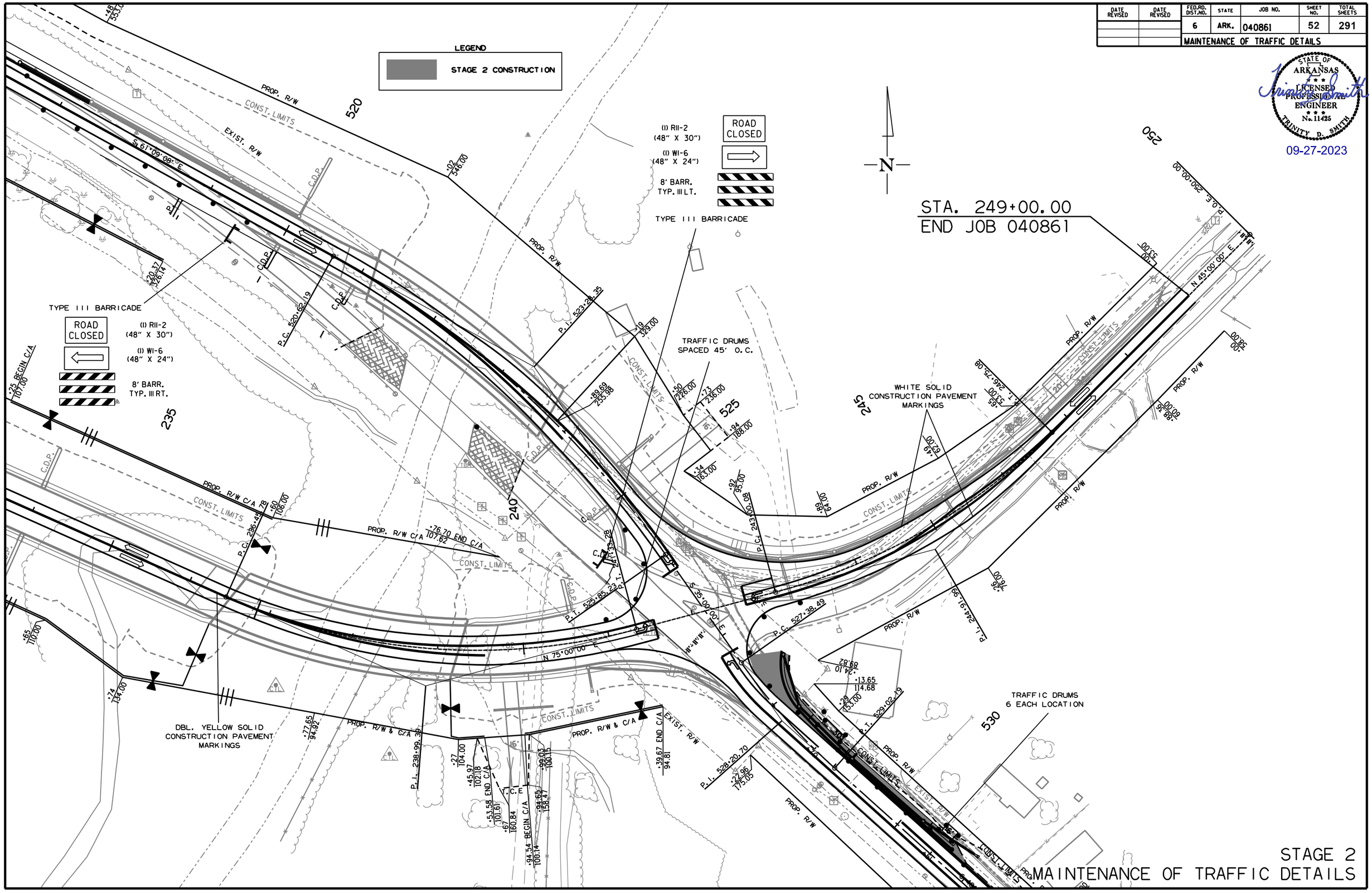

STAGE 2
MAINTENANCE OF TRAFFIC DETAILS

rb43088 9/21/2023
R040861.DGN

DATE REVISED	DATE REVISED	FED.RD. DIST.NO.	STATE	JOB NO.	SHEET NO.	TOTAL SHEETS
		6	ARK.	040861	53	291
		MAINTENANCE OF TRAFFIC DETAILS				

STATE OF ARKANSAS
LICENSED PROFESSIONAL ENGINEER
No. 11425
TRINITY D. SMITH

09-27-2023

LEGEND

STAGE 2 CONSTRUCTION

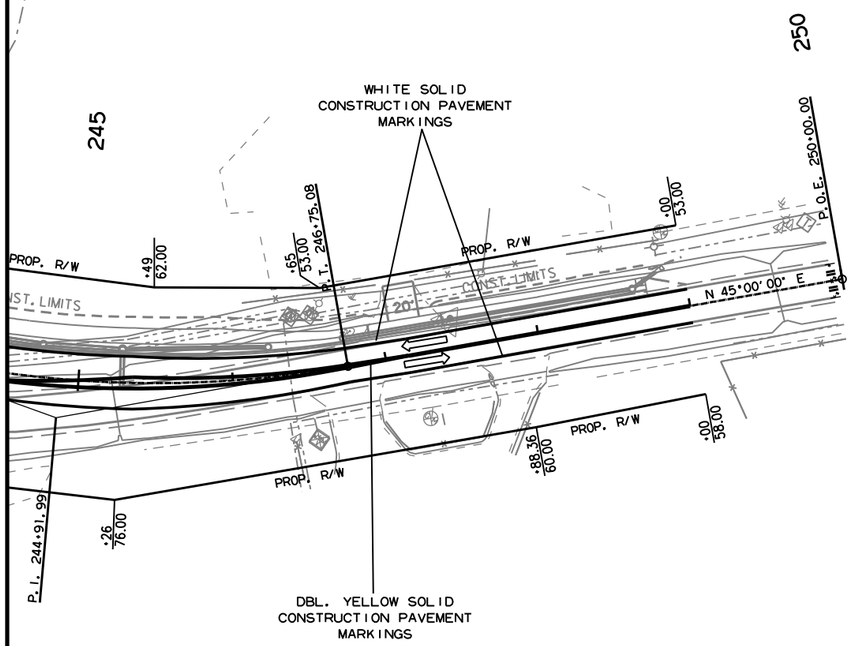

STAGE 2
MAINTENANCE OF TRAFFIC DETAILS

rb43088 9/21/2023
R040861.DGN

DATE REVISED	DATE REVISED	FED.RD. DIST.NO.	STATE	JOB NO.	SHEET NO.	TOTAL SHEETS
		6	ARK.	040861	54	291
		MAINTENANCE OF TRAFFIC DETAILS				

STATE OF ARKANSAS
LICENSED PROFESSIONAL ENGINEER
No. 11425
TRINITY D. SMITH

09-27-2023

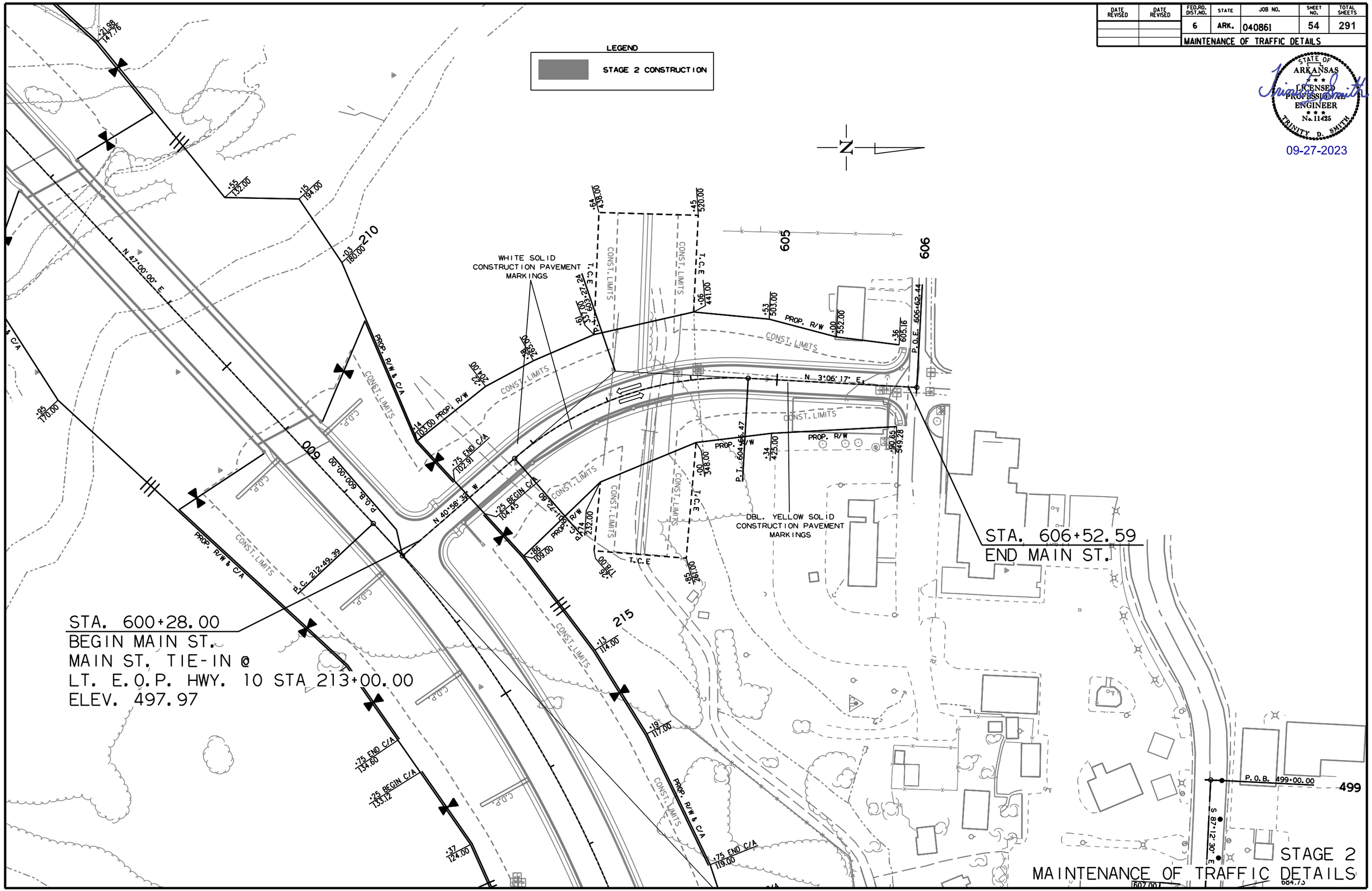

STAGE 2
MAINTENANCE OF TRAFFIC DETAILS

rb43088 9/21/2023
R040861.DGN

DATE REVISED	DATE REVISED	FED.RD. DIST.NO.	STATE	JOB NO.	SHEET NO.	TOTAL SHEETS
		6	ARK.	040861	55	291
		MAINTENANCE OF TRAFFIC DETAILS				

STATE OF ARKANSAS
LICENSED PROFESSIONAL ENGINEER
No. 11425
TRINITY D. SMITH

09-27-2023

1 — DETOUR 1500 FT — (1) W20-2 (48" X 48")

2 — DETOUR — (1) M4-8 (24" X 12") — (1) M5-1 (21" X 15")

3 — DETOUR — (1) M4-8 (24" X 12") — (1) M6-1 (21" X 15")

4 — ROAD CLOSED 0.30 MILES AHEAD LOCAL TRAFFIC ONLY — (1) R11-3a (60" X 30") — DETOUR — (1) M4-10 (48" X 18")

5 — ROAD CLOSED 1000 FT — (1) W20-3 (48" X 48")

6 — ROAD CLOSED 500 FT — (1) W20-3 (48" X 48")

7 — DETOUR — (1) M4-8 (24" X 12")

8 — ROAD CLOSED 0.30 MILES AHEAD LOCAL TRAFFIC ONLY — (1) R11-3a (60" X 30") — DETOUR — (1) M4-10 (48" X 18")

9 — DETOUR — (1) M4-8 (24" X 12") — (1) M6-1 (21" X 15")

10 — DETOUR — (1) M4-8 (24" X 12") — (1) M5-1 (21" X 15")

STAGE 2 DETOUR

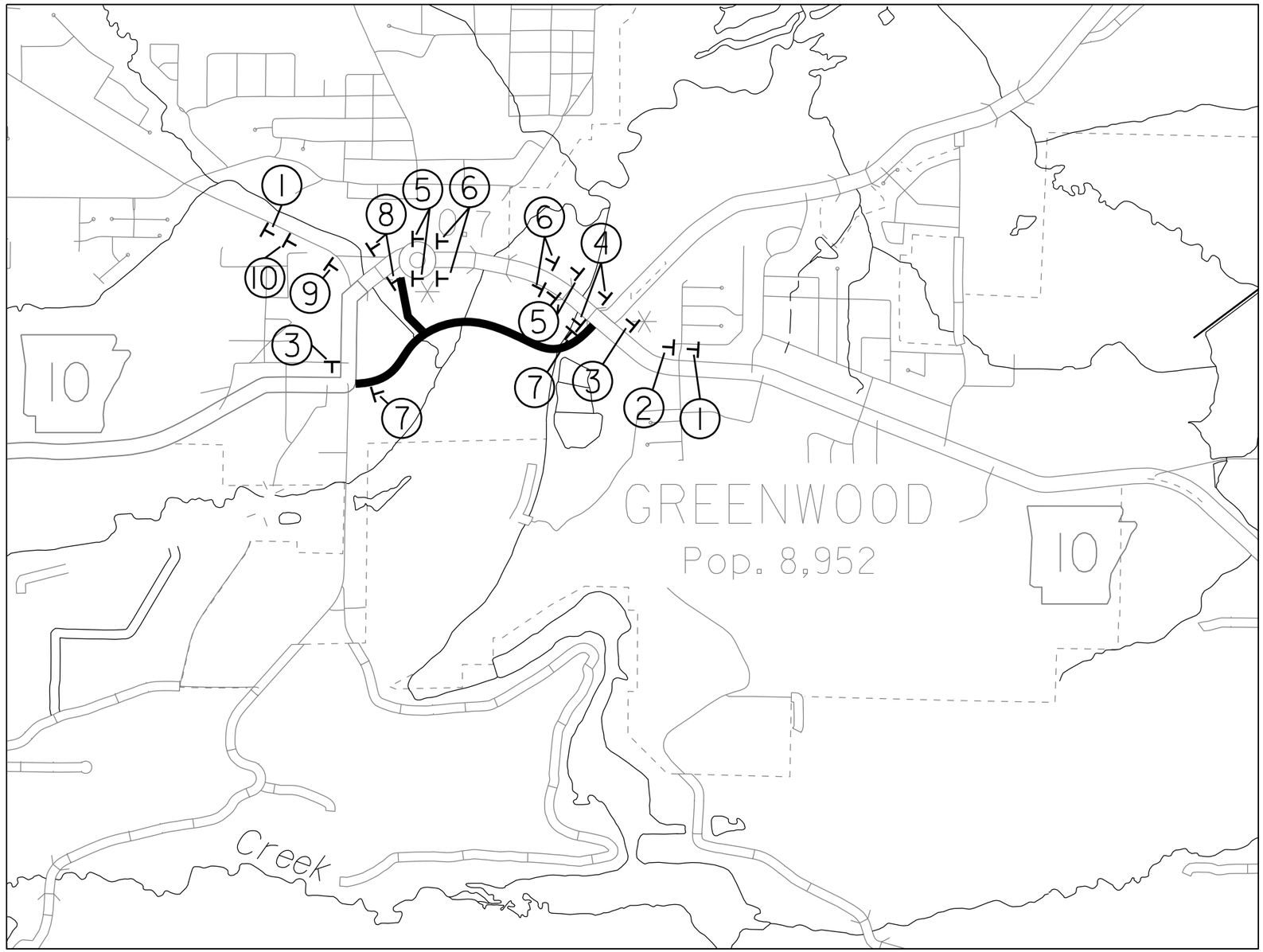

STAGE 2
MAINTENANCE OF TRAFFIC DETAILS

rb43088 9/21/2023
R040861.DGN

DATE REVISED	DATE REVISED	FED.RD. DIST.NO.	STATE	JOB NO.	SHEET NO.	TOTAL SHEETS
		6	ARK.	040861	56	291
		MAINTENANCE OF TRAFFIC DETAILS				

STATE OF ARKANSAS
LICENSED PROFESSIONAL ENGINEER
No. 11425
TRINITY D. SMITH

09-27-2023

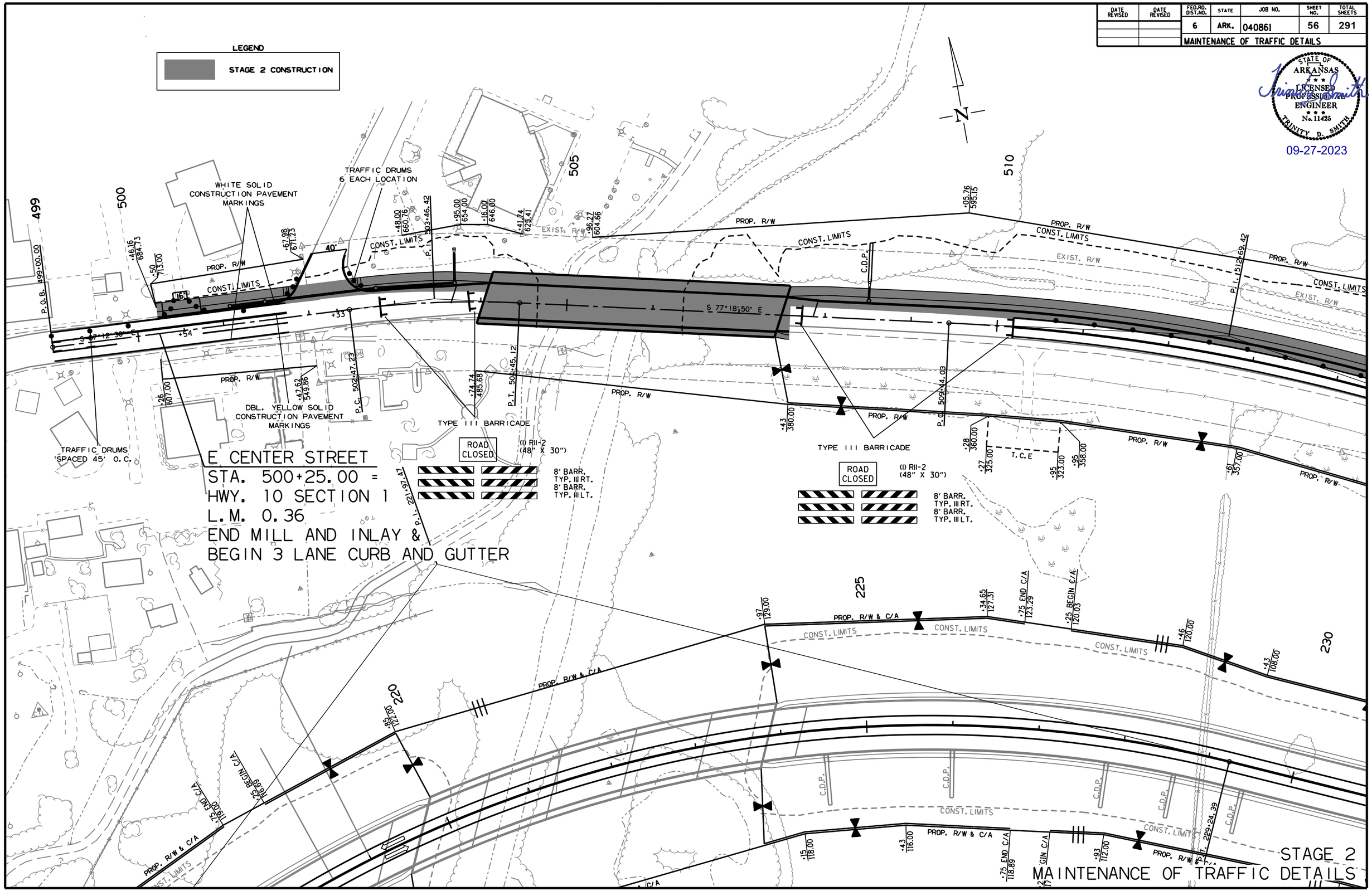

STAGE 2
MAINTENANCE OF TRAFFIC DETAILS

rb43088 9/21/2023
R040861.DGN

DATE REVISED	DATE REVISED	FED.RD. DIST.NO.	STATE	JOB NO.	SHEET NO.	TOTAL SHEETS
		6	ARK.	040861	57	291
		MAINTENANCE OF TRAFFIC DETAILS				

STATE OF ARKANSAS
LICENSED PROFESSIONAL ENGINEER
No. 11425
TRINITY D. SMITH
09-27-2023

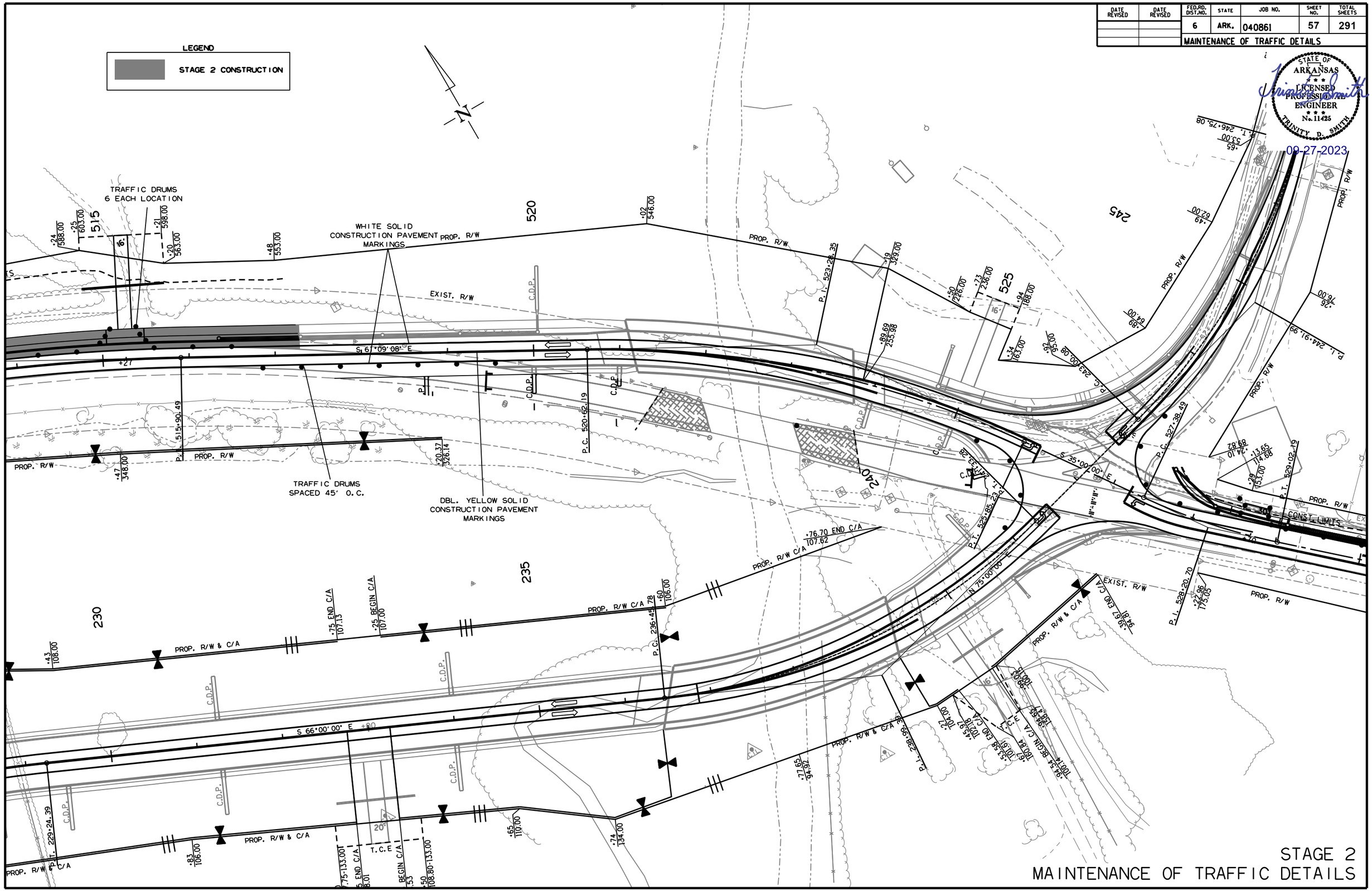

STAGE 2
MAINTENANCE OF TRAFFIC DETAILS

rb43088 9/21/2023
R040861.DGN

DATE REVISED	DATE REVISED	FED.RD. DIST.NO.	STATE	JOB NO.	SHEET NO.	TOTAL SHEETS
		6	ARK.	040861	58	291
		MAINTENANCE OF TRAFFIC DETAILS				

STATE OF ARKANSAS
LICENSED PROFESSIONAL ENGINEER
No. 11425
TRINITY D. SMITH

09-27-2023

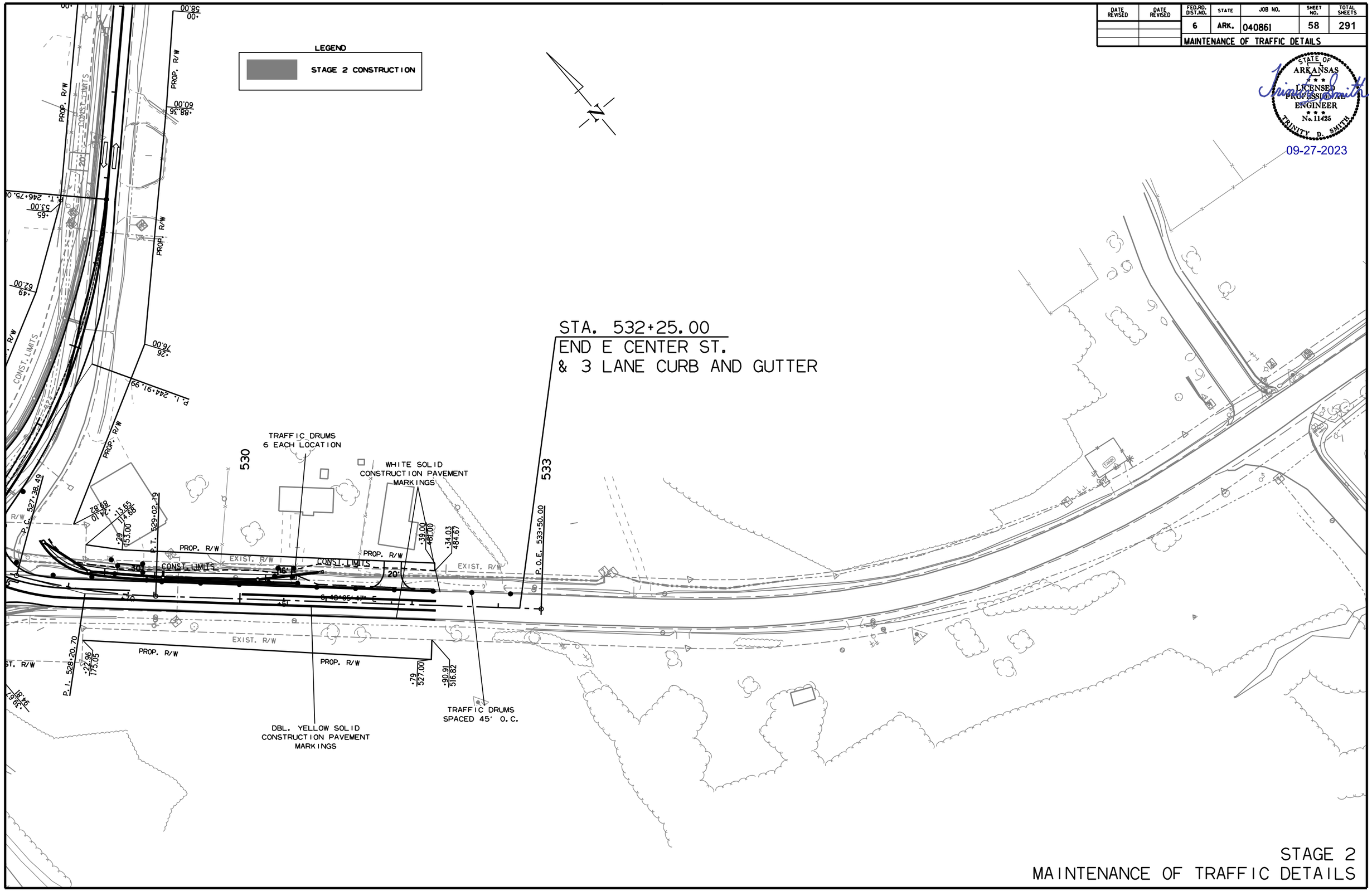

STAGE 2
MAINTENANCE OF TRAFFIC DETAILS

rb43088 9/21/2023
R040861.DGN

DATE REVISED	DATE REVISED	FED.RD. DIST.NO.	STATE	JOB NO.	SHEET NO.	TOTAL SHEETS
		6	ARK.	040861	59	291
		MAINTENANCE OF TRAFFIC DETAILS				

STATE OF ARKANSAS
LICENSED PROFESSIONAL ENGINEER
No. 11425
TRINITY D. SMITH

09-27-2023

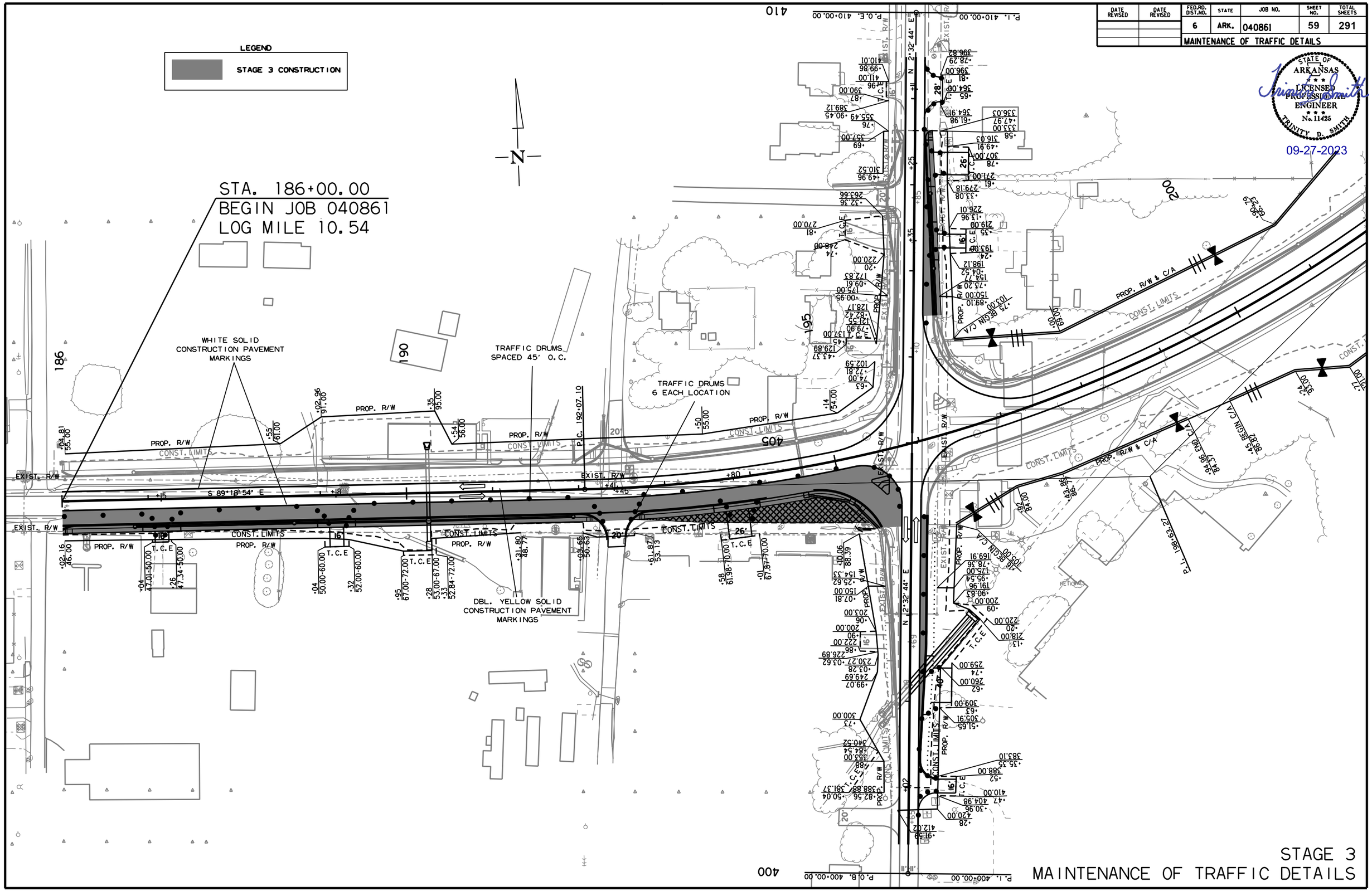

STAGE 3
MAINTENANCE OF TRAFFIC DETAILS

rb43088 9/21/2023
R040861.DGN

DATE REVISED	DATE REVISED	FED.RD. DIST.NO.	STATE	JOB NO.	SHEET NO.	TOTAL SHEETS
		6	ARK.	040861	60	291
		MAINTENANCE OF TRAFFIC DETAILS				

STATE OF ARKANSAS
LICENSED PROFESSIONAL ENGINEER
No. 11425
TRINITY D. SMITH

09-27-2023

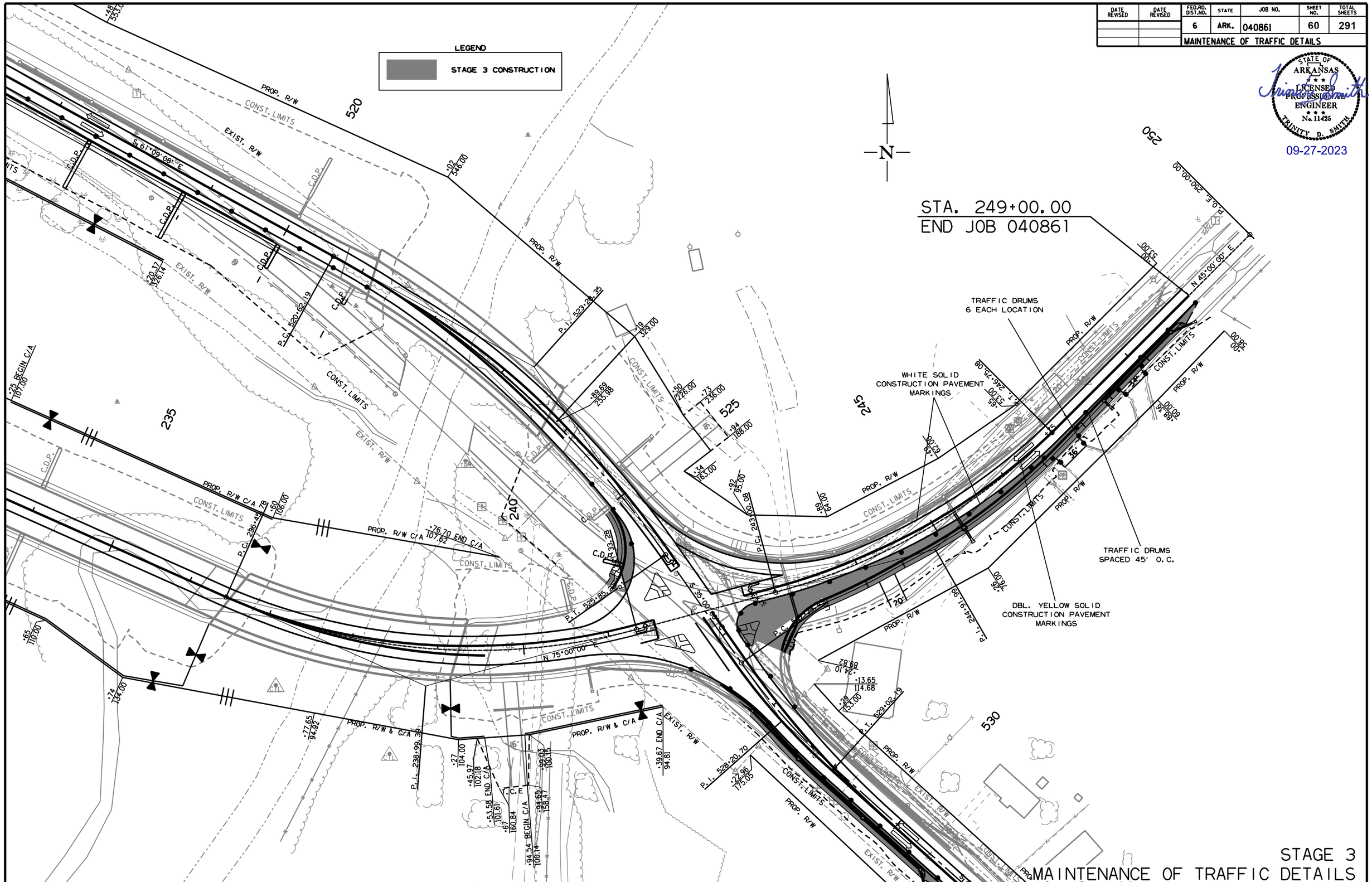

STAGE 3
MAINTENANCE OF TRAFFIC DETAILS

rb43088 9/21/2023
R040861.DGN

DATE REVISED	DATE REVISED	FED.RD. DIST.NO.	STATE	JOB NO.	SHEET NO.	TOTAL SHEETS
		6	ARK.	040861	61	291
		MAINTENANCE OF TRAFFIC DETAILS				

STATE OF ARKANSAS
LICENSED PROFESSIONAL ENGINEER
No. 11425
TRINITY D. SMITH

09-27-2023

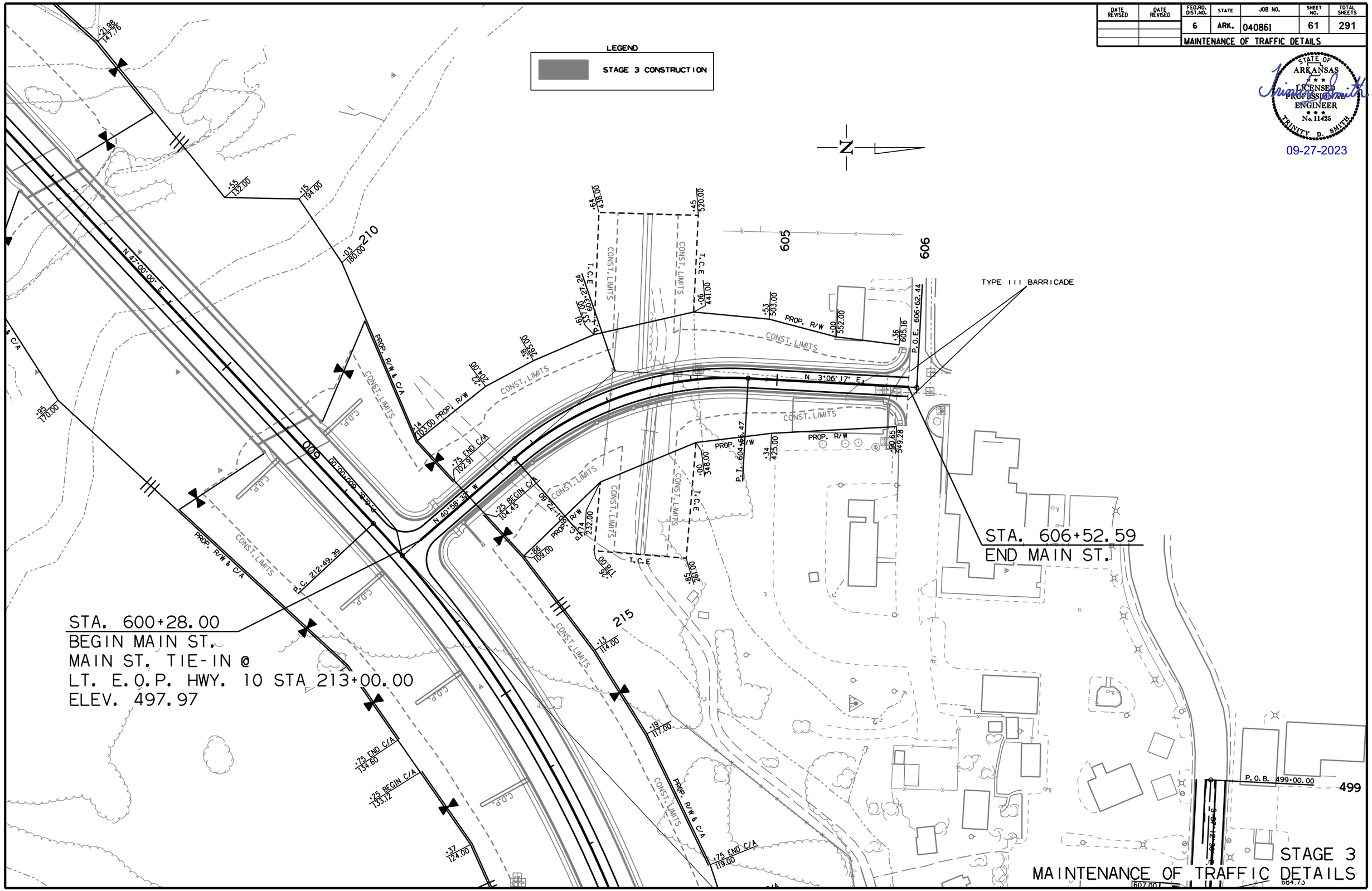

STAGE 3
MAINTENANCE OF TRAFFIC DETAILS

rb43088 9/21/2023
R040861.DGN

DATE REVISED	DATE REVISED	FED.RD. DIST.NO.	STATE	JOB NO.	SHEET NO.	TOTAL SHEETS
		6	ARK.	040861	62	291

MAINTENANCE OF TRAFFIC DETAILS

STATE OF ARKANSAS LICENSED PROFESSIONAL ENGINEER No. 11425 TRINITY D. SMITH

09-27-2023

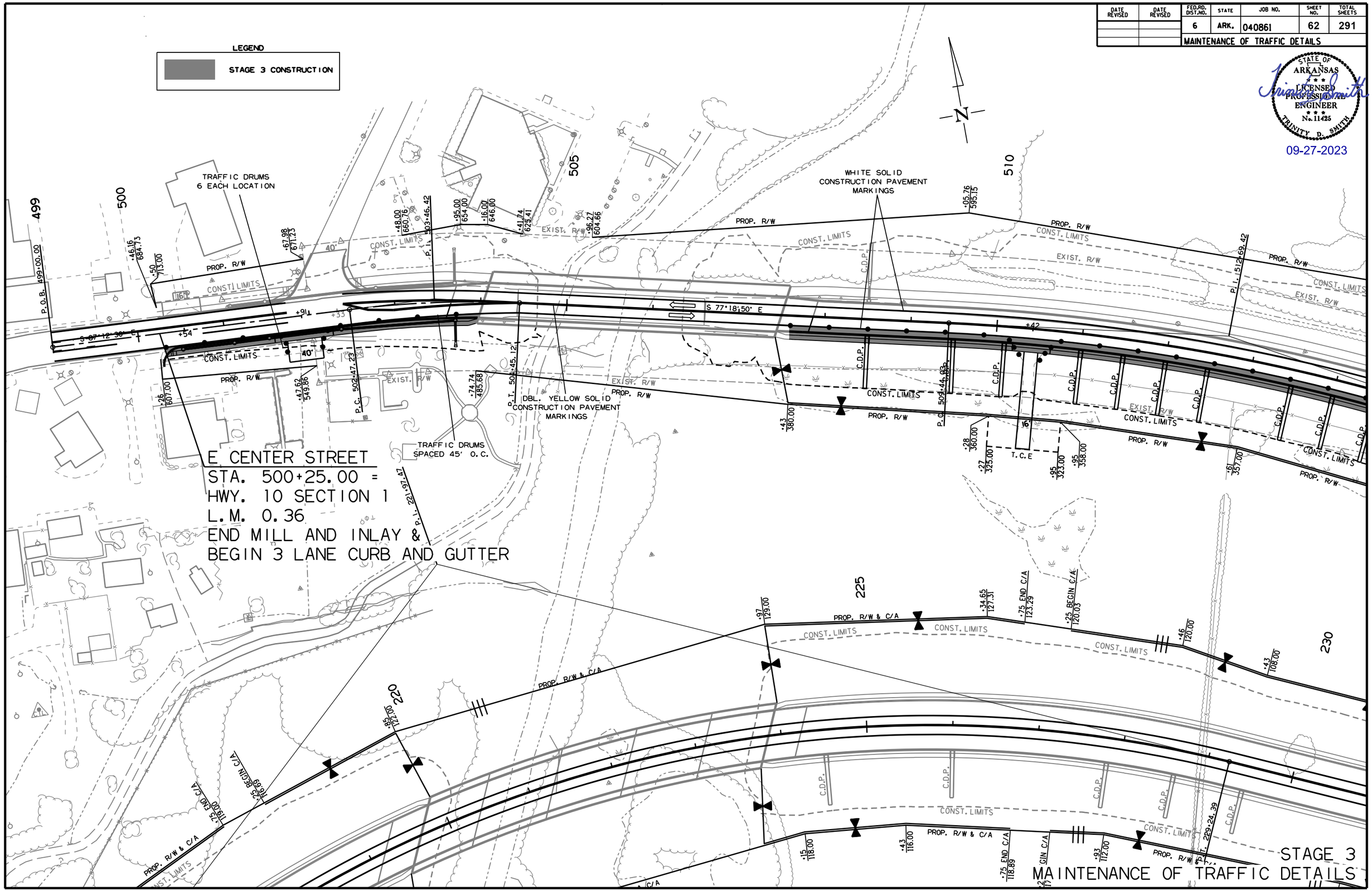

STAGE 3
MAINTENANCE OF TRAFFIC DETAILS

rb43088 9/21/2023
R040861.DGN

DATE REVISED	DATE REVISED	FED.RD. DIST.NO.	STATE	JOB NO.	SHEET NO.	TOTAL SHEETS
		6	ARK.	040861	63	291
		MAINTENANCE OF TRAFFIC DETAILS				

STATE OF ARKANSAS
LICENSED PROFESSIONAL ENGINEER
No. 11425
TRINITY D. SMITH
09-27-2023

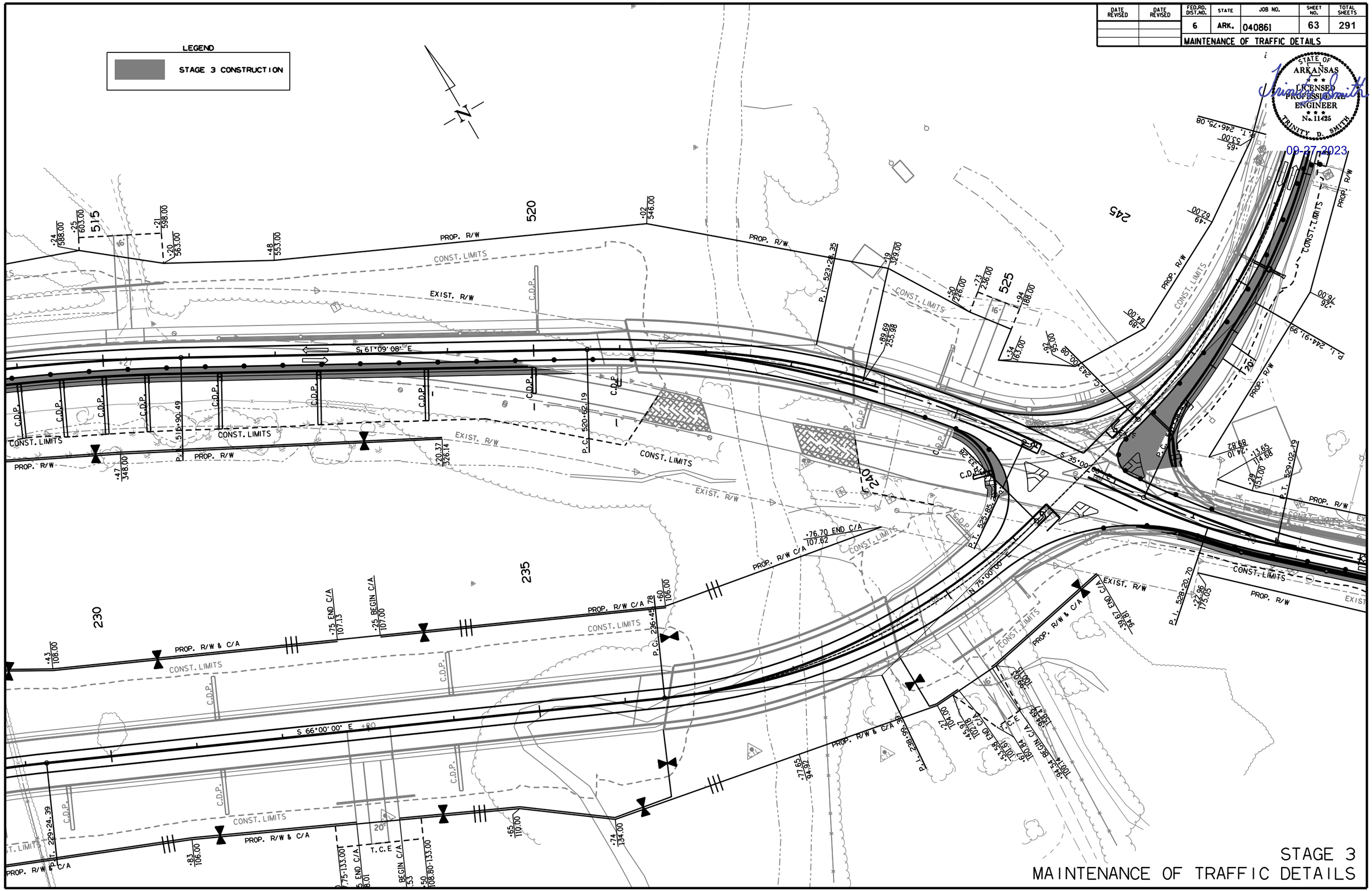

STAGE 3
MAINTENANCE OF TRAFFIC DETAILS

rb43088 9/21/2023
R040861.DGN

DATE REVISED	DATE REVISED	FED.RD. DIST.NO.	STATE	JOB NO.	SHEET NO.	TOTAL SHEETS
		6	ARK.	040861	64	291

MAINTENANCE OF TRAFFIC DETAILS

STATE OF ARKANSAS
LICENSED PROFESSIONAL ENGINEER
No. 11425
TRINITY D. SMITH

09-27-2023

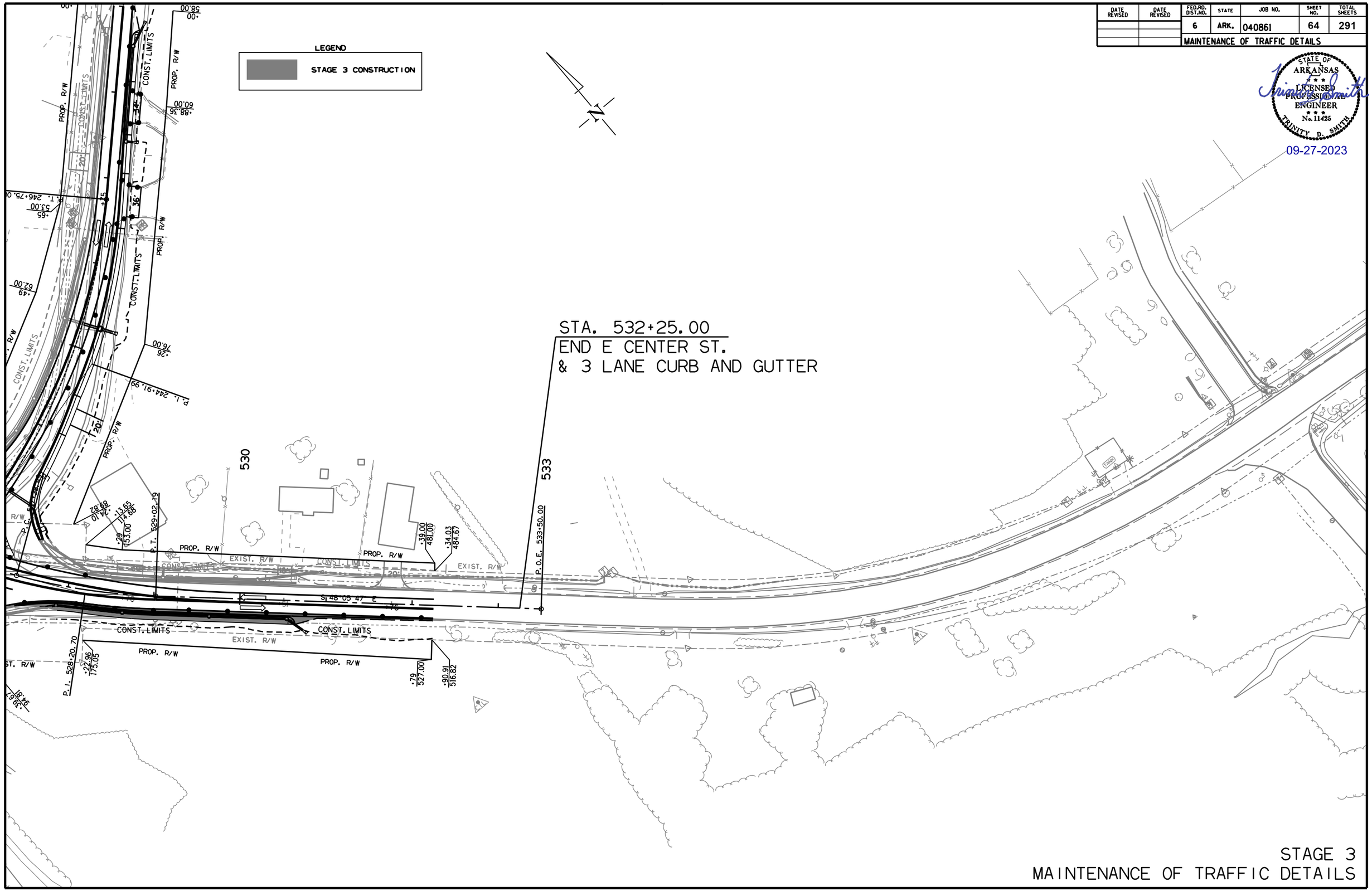

STAGE 3
MAINTENANCE OF TRAFFIC DETAILS

rb43088 9/21/2023
R040861.DGN

DATE REVISED	DATE REVISED	FED.RD. DIST.NO.	STATE	JOB NO.	SHEET NO.	TOTAL SHEETS
		6	ARK.	040861	65	291
		PERMANENT PAVEMENT MARKING DETAILS				

STATE OF ARKANSAS
LICENSED PROFESSIONAL ENGINEER
No. 11425
TRINITY D. SMITH

09-27-2023

PERMANENT PAVEMENT MARKINGS

THERMOPLASTIC PAVEMENT MARKING WHITE (6") = 2,447 LIN. FT.
- STA. 186+00.00 - STA. 249+00.00
- STA. 401+00.00 - STA. 408+63.00
- STA. 500+25.00 - STA. 532+25.00

THERMOPLASTIC PAVEMENT MARKING YELLOW (6") = 20,664 LIN. FT.
- STA. 186+00.00 - STA. 249+00.00
- STA. 401+00.00 - STA. 408+63.00
- STA. 500+25.00 - STA. 532+25.00
- STA. 600+28.00 - STA. 606+52.59

THERMOPLASTIC PAVEMENT MARKING WHITE (12") = 913 LIN. FT.
- STA. 186+00.00 - STA. 249+00.00
- STA. 401+00.00 - STA. 408+63.00
- STA. 600+28.00 - STA. 606+52.59

THERMOPLASTIC PAVEMENT MARKING WHITE (ARROWS) = 8 EACH
- STA. 186+00.00 - STA. 249+00.00

RAISED PAVEMENT MARKINGS TYPE II (WHITE/RED) = 274 EACH
- STA. 186+00.00 - STA. 249+00.00
- STA. 401+00.00 - STA. 408+63.00
- STA. 500+25.00 - STA. 532+25.00
- STA. 600+28.00 - STA. 606+52.59

RAISED PAVEMENT MARKINGS TYPE II (YELLOW/YELLOW) = 218 EACH
- STA. 186+00.00 - STA. 249+00.00
- STA. 401+00.00 - STA. 408+63.00
- STA. 500+25.00 - STA. 532+25.00
- STA. 600+28.00 - STA. 606+52.59

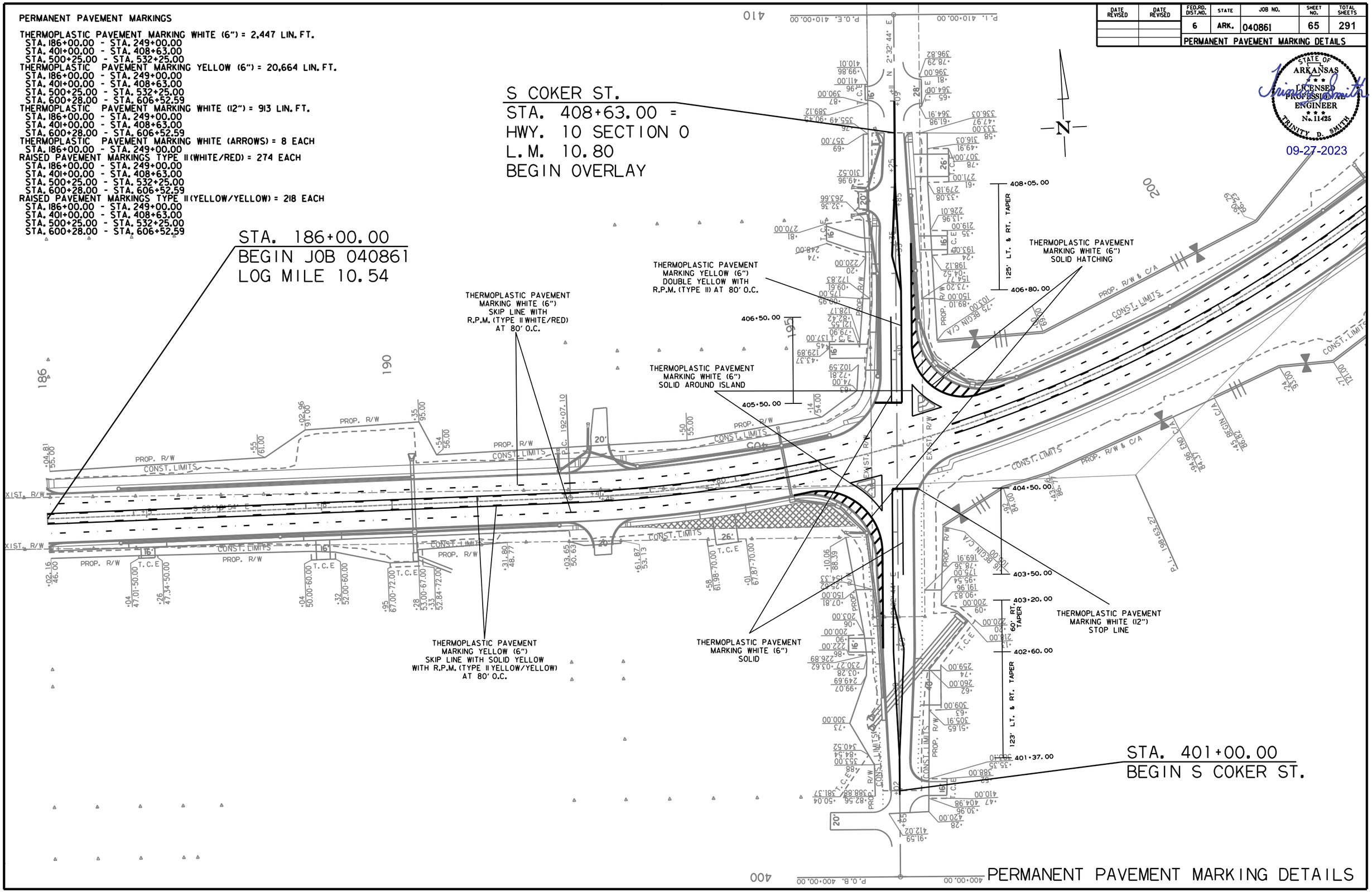

PERMANENT PAVEMENT MARKING DETAILS

rb43088 9/15/2023
R040861.DGN

DATE REVISED	DATE REVISED	FED.RD. DIST.NO.	STATE	JOB NO.	SHEET NO.	TOTAL SHEETS
		6	ARK.	040861	66	291

PERMANENT PAVEMENT MARKING DETAILS

STATE OF ARKANSAS
LICENSED PROFESSIONAL ENGINEER
No. 11425
TRINITY D. SMITH

09-27-2023

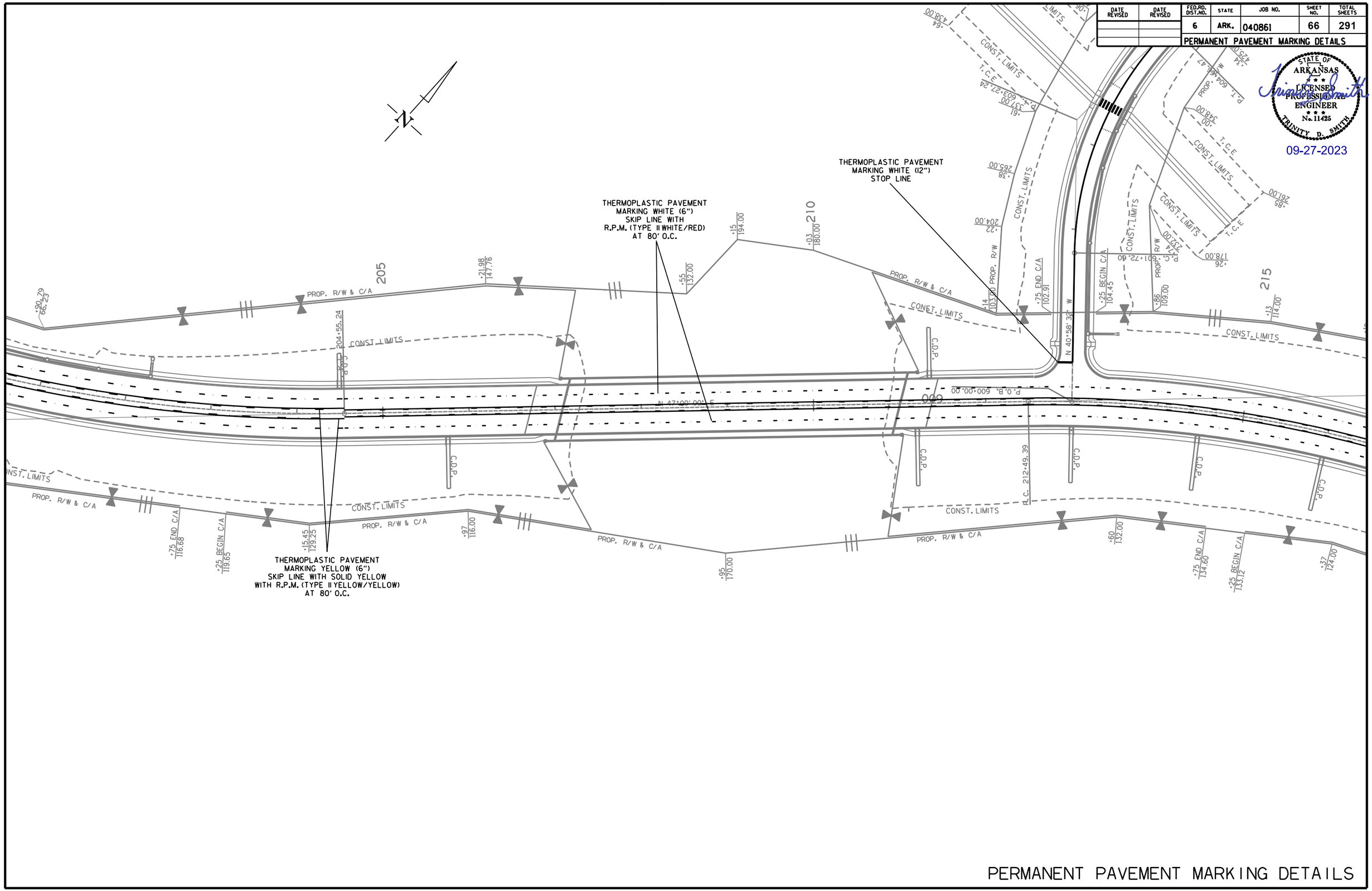

PERMANENT PAVEMENT MARKING DETAILS

rb43088 9/15/2023
R040861.DGN

DATE REVISED	DATE REVISED	FED.RD. DIST.NO.	STATE	JOB NO.	SHEET NO.	TOTAL SHEETS
		6	ARK.	040861	67	291

PERMANENT PAVEMENT MARKING DETAILS

STATE OF ARKANSAS
LICENSED PROFESSIONAL ENGINEER
No. 11425
TRINITY D. SMITH

09-27-2023

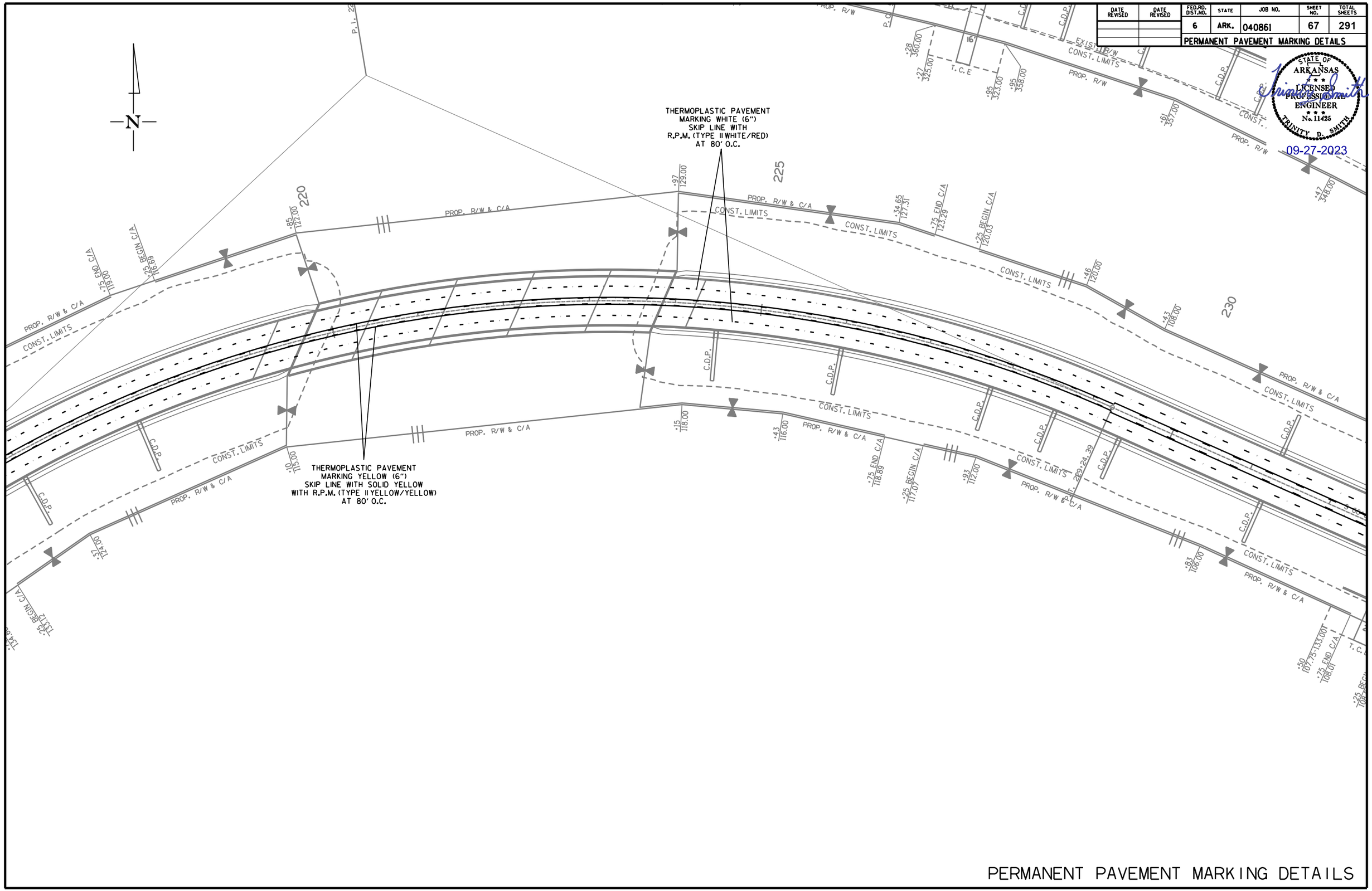

rb43088 9/15/2023
R040861.DGN

PERMANENT PAVEMENT MARKING DETAILS

DATE REVISED	DATE REVISED	FED.RD. DIST.NO.	STATE	JOB NO.	SHEET NO.	TOTAL SHEETS
		6	ARK.	040861	68	291

PERMANENT PAVEMENT MARKING DETAILS

STATE OF ARKANSAS LICENSED PROFESSIONAL ENGINEER No. 11425 TRINITY D. SMITH

09-27-2023

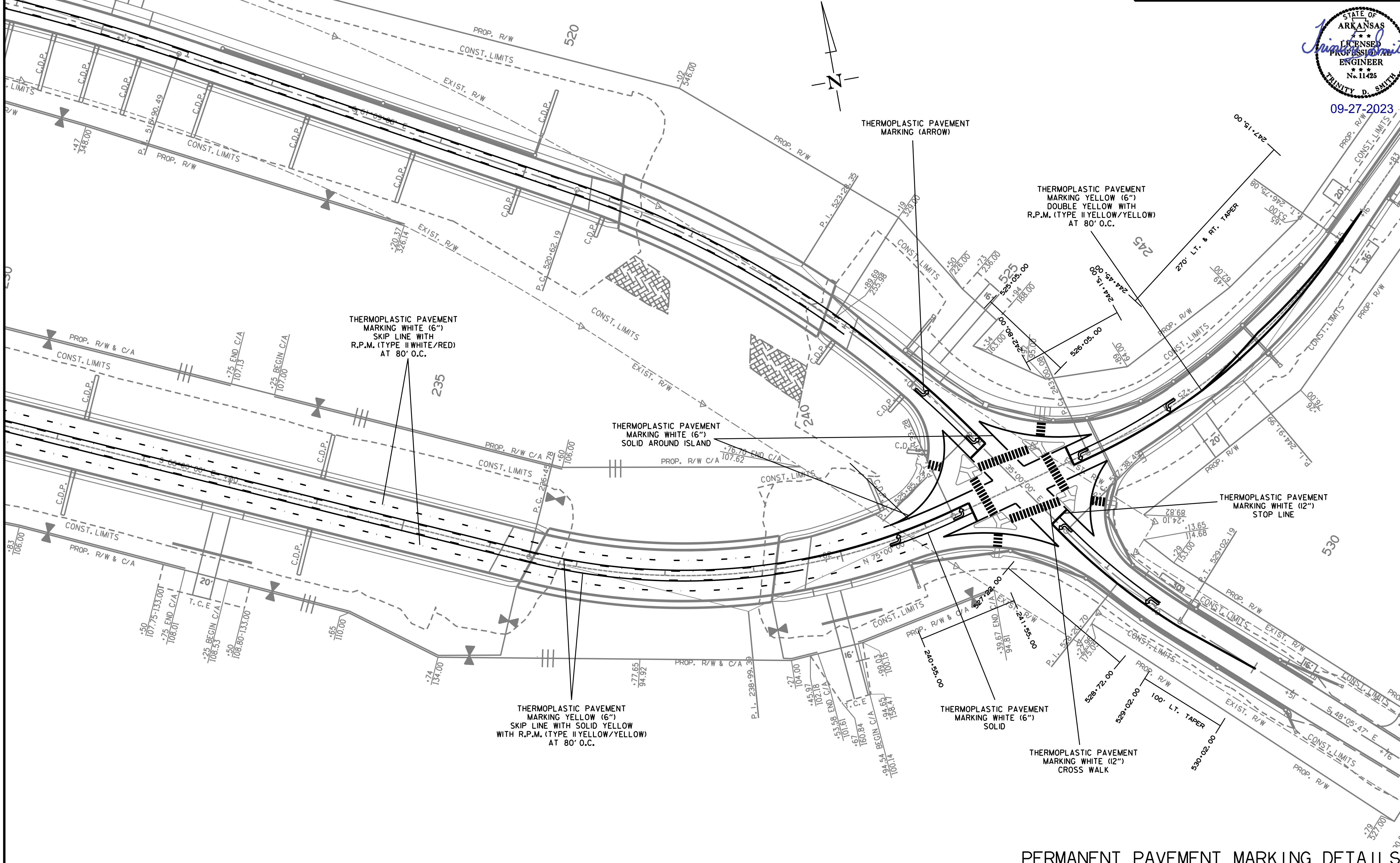

PERMANENT PAVEMENT MARKING DETAILS

9/15/2023
rb43088
R040861.DGN

DATE REVISED	DATE REVISED	FED.RD. DIST.NO.	STATE	JOB NO.	SHEET NO.	TOTAL SHEETS
		6	ARK.	040861	69	291
		PERMANENT PAVEMENT MARKING DETAILS				

STATE OF ARKANSAS
LICENSED PROFESSIONAL ENGINEER
No. 11425
TRINITY D. SMITH

09-27-2023

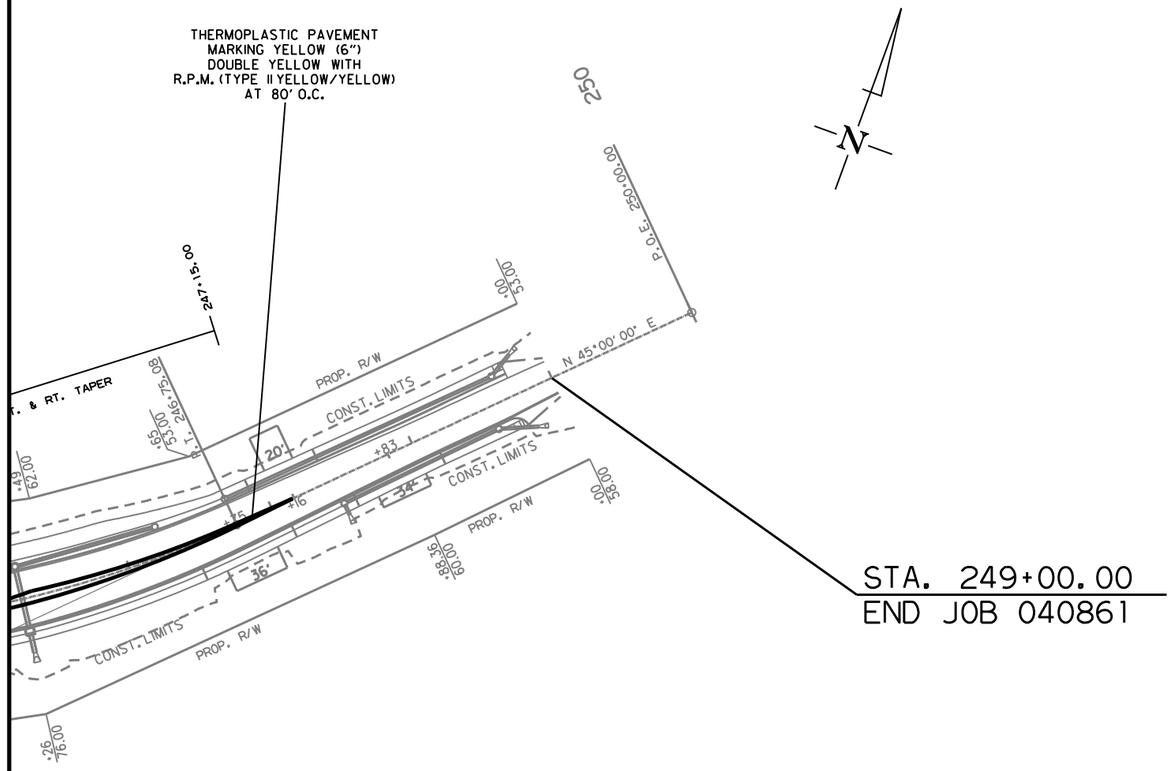

rb43088 9/15/2023
R040861.DGN

DATE REVISED	DATE REVISED	FED.RD. DIST.NO.	STATE	JOB NO.	SHEET NO.	TOTAL SHEETS
		6	ARK.	040861	70	291

PERMANENT PAVEMENT MARKING DETAILS

STATE OF ARKANSAS
LICENSED PROFESSIONAL ENGINEER
No. 11425
TRINITY D. SMITH

09-27-2023

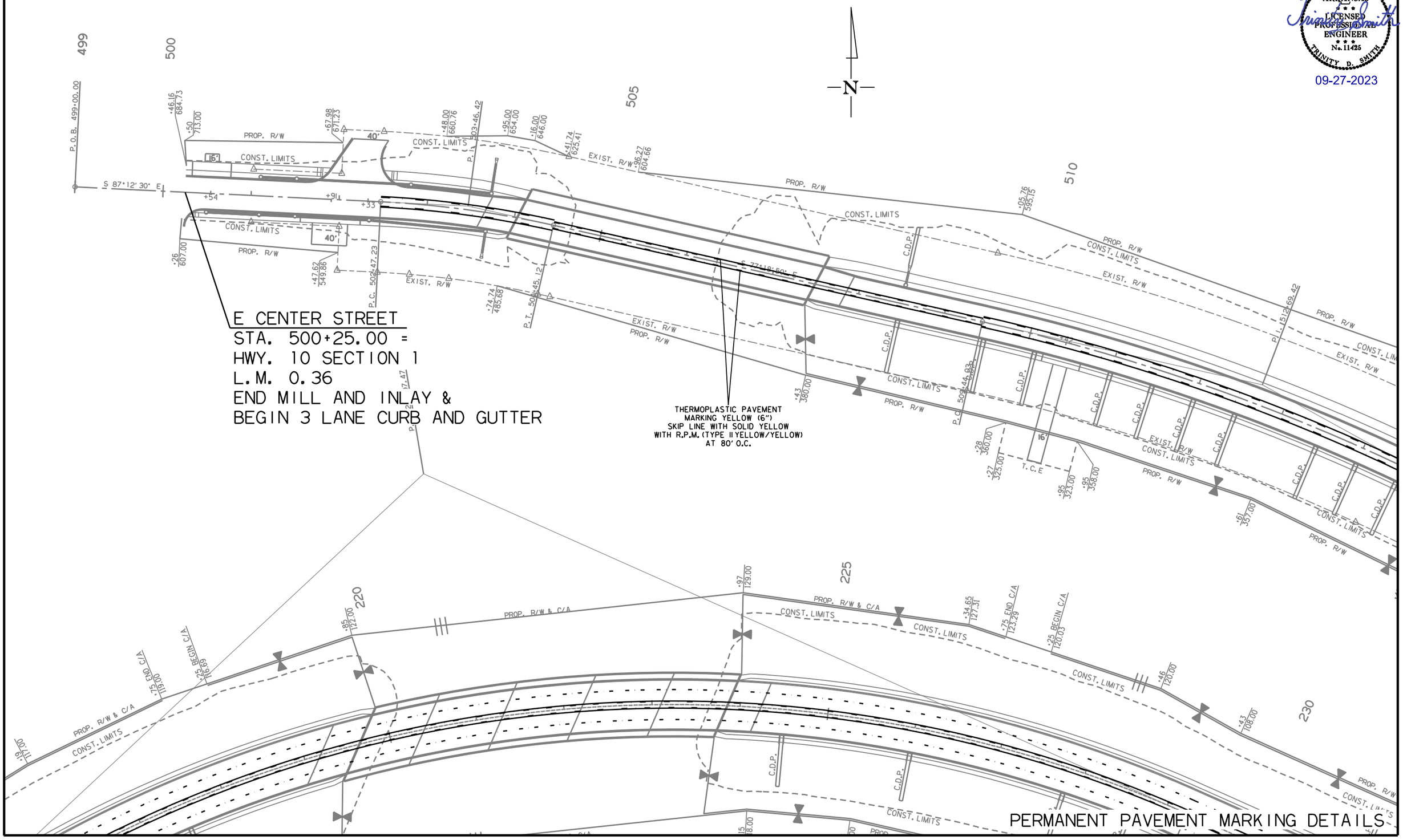

PERMANENT PAVEMENT MARKING DETAILS

rb43088 9/15/2023
R040861.DGN

DATE REVISED	DATE REVISED	FED.RD. DIST.NO.	STATE	JOB NO.	SHEET NO.	TOTAL SHEETS
		6	ARK.	040861	71	291
		PERMANENT PAVEMENT MARKING DETAILS				

STATE OF ARKANSAS
LICENSED PROFESSIONAL ENGINEER
No. 11425
TRINITY D. SMITH
09-27-2023

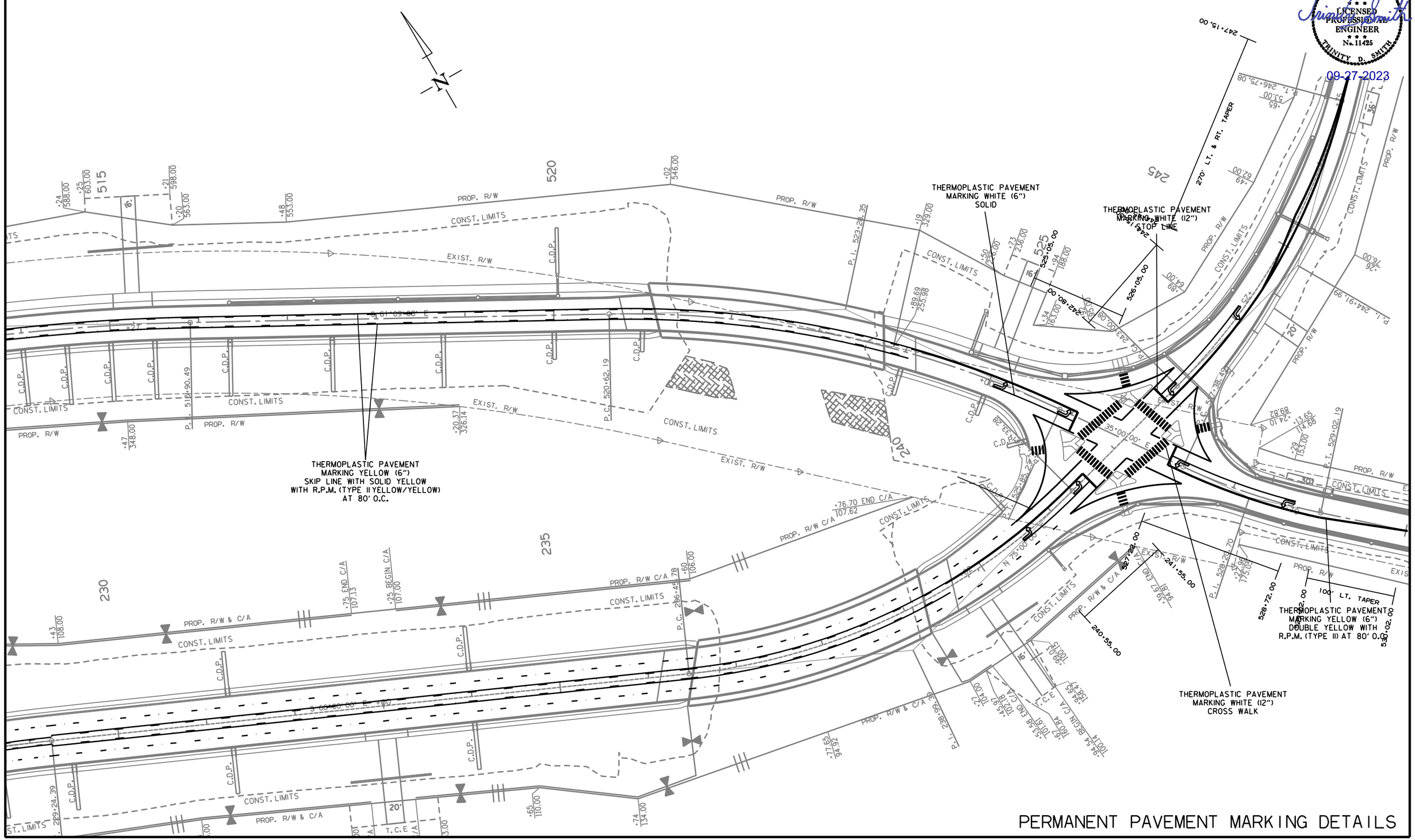

PERMANENT PAVEMENT MARKING DETAILS

rb43088 9/15/2023
R040861.DGN

DATE REVISED	DATE REVISED	FED.RD. DIST.NO.	STATE	JOB NO.	SHEET NO.	TOTAL SHEETS
		6	ARK.	040861	72	291

PERMANENT PAVEMENT MARKING DETAILS

STATE OF ARKANSAS
LICENSED PROFESSIONAL ENGINEER
No. 11425
TRINITY D. SMITH

09-27-2023

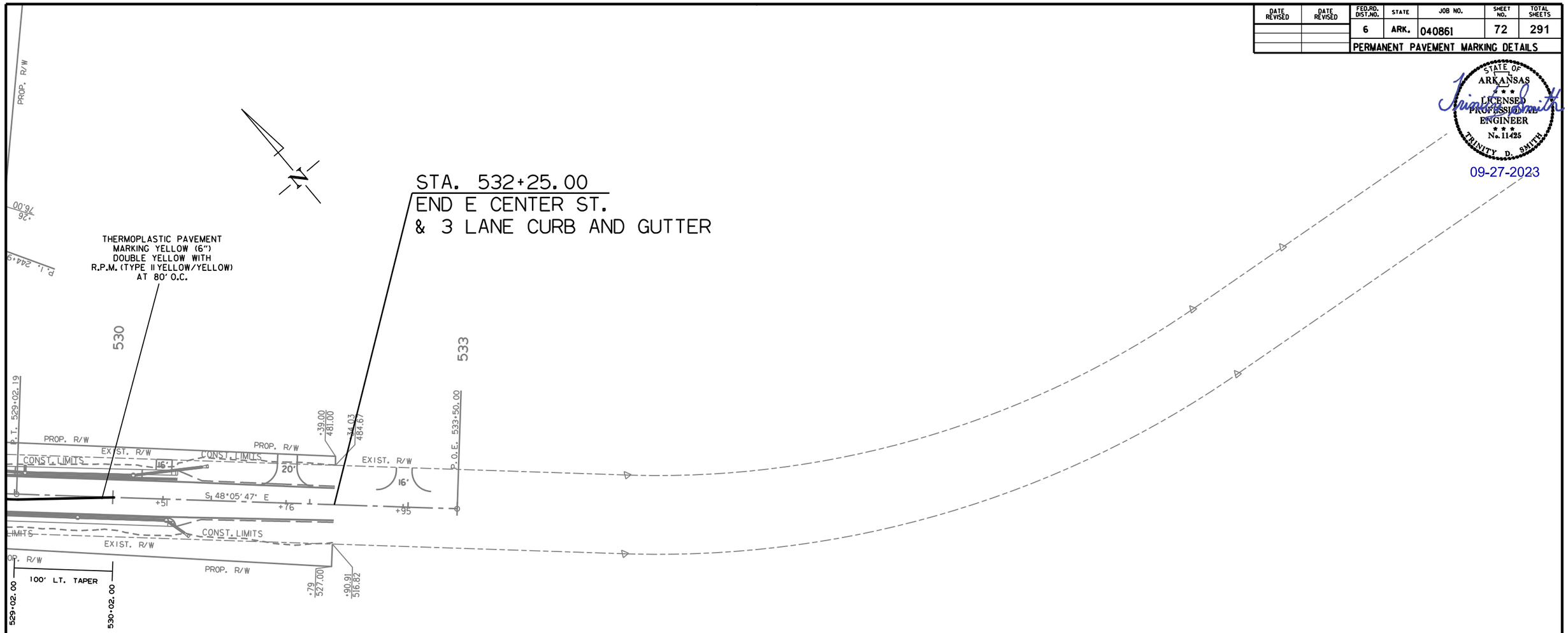

PERMANENT PAVEMENT MARKING DETAILS

rb43088 9/15/2023
R040861.DGN

DATE REVISED	DATE REVISED	FED.RD. DIST.NO.	STATE	JOB NO.	SHEET NO.	TOTAL SHEETS
		6	ARK.	040861	73	291
		PERMANENT PAVEMENT MARKING DETAILS				

STATE OF ARKANSAS
LICENSED PROFESSIONAL ENGINEER
No. 11425
TRINITY D. SMITH

09-27-2023

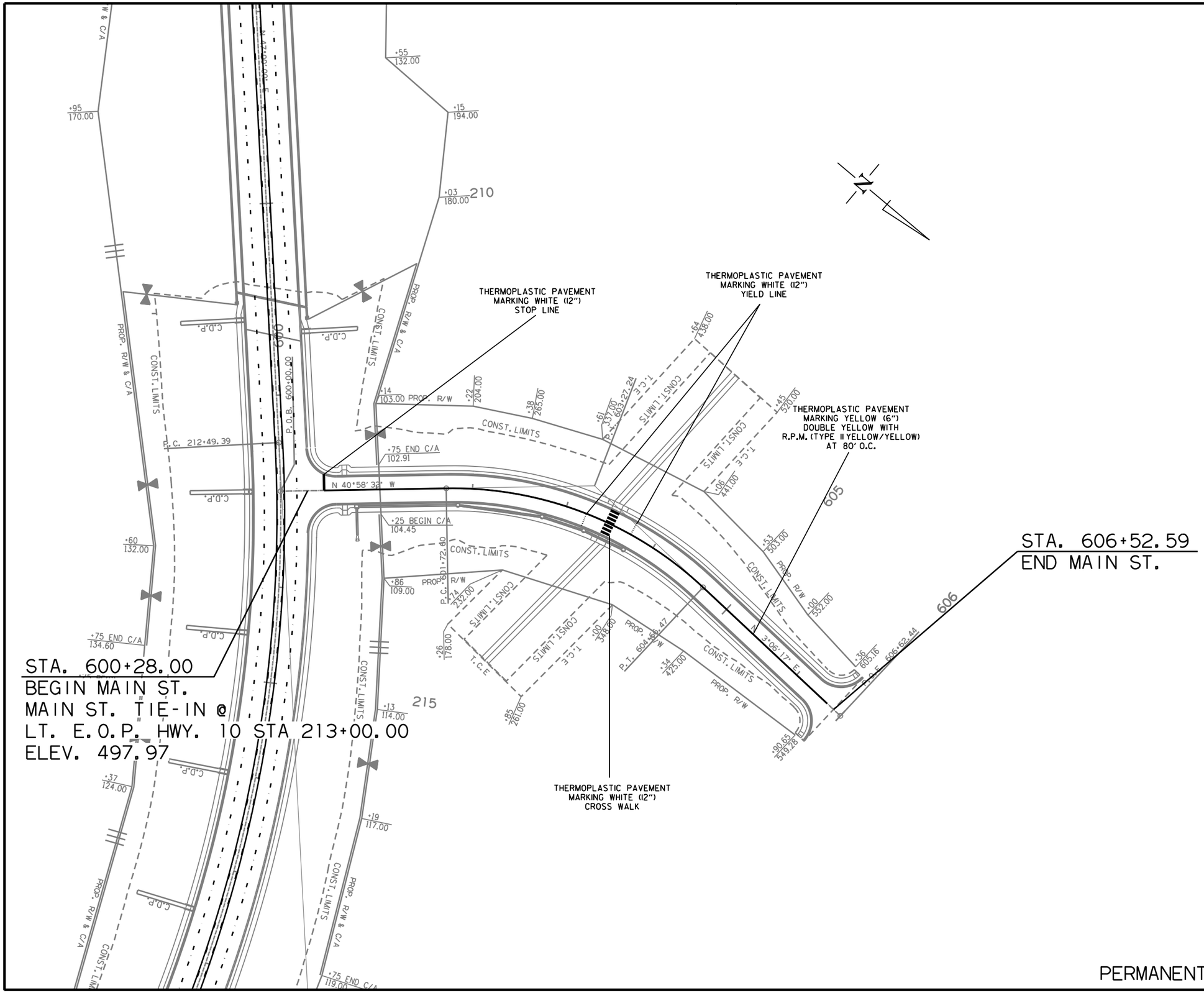

PERMANENT PAVEMENT MARKING DETAILS

rb43088 9/15/2023
R040861.DGN

STATE OF ARKANSAS LICENSED PROFESSIONAL ENGINEER No. 11425 TRINITY D. SMITH

Digitally signed by Trinity Smith
Date: 2023.09.27 16:50:32-05'00'

ADVANCE WARNING SIGNS AND DEVICES

SIGN NUMBER	DESCRIPTION	SIGN SIZE	STAGE 1	STAGE 2	STAGE 3	MAXIMUM NUMBER REQUIRED	TOTAL SIGNS REQUIRED		CONSTRUCTION PROJECT INFORMATION SIGN UPDATE	VERTICAL PANELS	TRAFFIC DRUMS	BARRICADES (TYPE III)	
												RIGHT	LEFT
			LIN. FT. - EACH				NO.	SQ. FT.	EACH	EACH		LIN. FT.	
W20-1	ROAD WORK 1500 FT.	48"x48"	6	6	6	6	6	96.0					
W20-1	ROAD WORK 1000 FT.	48"x48"	6	6	6	6	6	96.0					
W20-1	ROAD WORK 500 FT.	48"x48"	6	6	6	6	6	96.0					
W20-1	ROAD WORK AHEAD	48"x48"	4	4	4	4	4	64.0					
W20-2	DETOUR 1500 FT	48"x48"		2		2	2	32.0					
W20-3	ROAD CLOSED XX FT	48"x48"		4		4	4	64.0					
G20-2	END ROAD WORK	48"x24"	10	10	10	10	10	80.0					
R11-2	ROAD CLOSED	48"x30"	8	4	6	8	8	80.0					
R11-3a	ROAD CLOSED XX MILES AHEAD LOCAL TRAFFIC ONLY	60"x30"		2		2	2	25.0					
W1-6	LARGE ARROW	48"x24"		2		2	2	16.0					
M4-8	DETOUR	24"x12"		5		5	5	10.0					
M4-10	DETOUR	48"x18"		2		2	2	12.0					
M5-1	ADVANCE TURN ARROW	21"x15"		2		2	2	4.4					
M6-1	DIRECTIONAL ARROW	21"x15"		3		3	3	6.6					
R4-1	DO NOT PASS	24"x30"	5	5	5	5	5	25.0					
W21-5a	RIGHT SHOULDER CLOSED	36"x36"	5	5	5	5	5	45.0					
SPECIAL	CONSTRUCTION PROJECT INFORMATION SIGN	96"x48"	5	5	5	5	5	160.0					
	CONSTRUCTION PROJECT INFORMATION SIGN UPDATE								6.0				
	VERTICAL PANELS		91	122	179	179				179			
	TRAFFIC DRUMS		91	122	179	179					179		
	TYPE III BARRICADE-RT. (8')		4	4		4						32	
	TYPE III BARRICADE-LT. (8')		4	4		4							32
	TYPE III BARRICADE-RT. (16')		4			4						64	
	TYPE III BARRICADE-LT. (16')		4			4							64
TOTALS:								**912.0**	**6.0**	**179**	**179**	**96**	**96**

NOTE: THIS IS A HIGH TRAFFIC VOLUME ROAD AS DEFINED IN SECTION 604.03, STANDARD SPECIFICATIONS FOR HIGHWAY CONSTRUCTION.

CONSTRUCTION PAVEMENT MARKINGS AND PERMANENT PAVEMENT MARKINGS

DESCRIPTION	STAGE 1	STAGE 2	STAGE 3	END OF JOB	CONSTRUCTION PAVEMENT MARKINGS	CONSTRUCTION PAVEMENT MARKINGS	RAISED PAVEMENT MARKERS		THERMOPLASTIC PAVEMENT MARKING			
							TYPE II	TYPE II	6"		12"	ARROWS
						ARROWS	(WHITE/RED)	(YELLOW/YELLOW)	WHITE	YELLOW	WHITE	
		LIN. FT. - EACH			LIN. FT.	EACH	EACH		LIN. FT.			EACH
CONSTRUCTION PAVEMENT MARKINGS	2879	40105	48723		91707							
CONSTRUCTION PAVEMENT MARKINGS (ARROWS)		4	2			6						
RAISED PAVEMENT MARKERS TYPE II (WHITE/RED)				274			274					
RAISED PAVEMENT MARKERS TYPE II (YELLOW/YELLOW)				218				218				
THERMOPLASTIC PAVEMENT MARKING WHITE (6")				2447					2447			
THERMOPLASTIC PAVEMENT MARKING YELLOW (6")				20664						20664		
THERMOPLASTIC PAVEMENT MARKING WHITE (12")				913							913	
THERMOPLASTIC PAVEMENT MARKING (ARROWS)				8								8
TOTALS:					**91707**	**6**	**274**	**218**	**2447**	**20664**	**913**	**8**

NOTE: THIS IS A HIGH TRAFFIC VOLUME ROAD AS DEFINED IN SECTION 604.03, STANDARD SPECIFICATIONS FOR HIGHWAY CONSTRUCTION.

NOTE: THE 6" YELLOW STRIPING QUANTITY HAS BEEN ESTIMATED BASED ON A DOUBLE YELLOW CENTERLINE STRIPE FOR THE ENTIRE PROJECT.
THE PROJECT MUST BE MARKED FOR PASSING/NO PASSING ZONES PRIOR TO THE PLACEMENT OF ANY FINAL STRIPING.
CONTACT THE MAINTENANCE DIVISION AFTER THE FINAL LIFT OF SURFACE COURSE HAS BEEN PLACED TO SCHEDULE THE ZONING OF THE PROJECT.

STATE OF ARKANSAS LICENSED PROFESSIONAL ENGINEER No. 11425 TRINITY D. SMITH

09-27-2023

CLEARING AND GRUBBING

STATION	STATION	LOCATION	CLEARING	GRUBBING
			STATION	
186+00	249+00	HWY. 10	63	63
401+00	408+63	S. COKER ST.	8	8
500+25	532+25	E. CENTER ST.	32	32
600+28	606+53	MAIN ST.	7	7
TOTALS:			110	110

REMOVAL AND DISPOSAL OF CULVERTS AND DROP INLETS

STATION	DESCRIPTION	PIPE CULVERTS	BOX CULVERTS	JUNCTION BOXES
		EACH	EACH	EACH
189+28	HWY. 10 LT			1
189+45	HWY. 10 RT		1	
243+56	HWY. 10 RT	1		1
TOTALS:		1	1	2

NOTE: QUANTITIES SHOWN ABOVE SHALL INCLUDE REMOVAL & DISPOSAL OF ALL HEADWALLS AND FLARED END SECTIONS IF APPLICABLE.

REMOVAL AND DISPOSAL OF ITEMS

STATION	STATION	LOCATION	CURB	CONCRETE ISLANDS	CONCRETE DRIVEWAYS	WALKS	SIGN FOUNDATIONS	HEADWALLS	GUARDRAIL	BUILDINGS	SIGNS	PLANTERS
			LIN. FT.	SQ. YD.	SQ. YD.	SQ. YD.	EACH	EACH	LIN. FT.	EACH	EACH	EACH
186+25	186+31	HWY. 10 RT					1				1	1
189+80	190+83	HWY. 10 LT	194			12				1		
189+53	189+71	HWY. 10 RT						1				
191+31	191+56	HWY. 10 LT	31									
191+73	191+73	HWY. 10 RT					1				1	
192+65	192+65	HWY. 10 LT									1	
194+29	194+68	HWY. 10 LT								1		
194+95	195+00	HWY. 10 RT						1				
195+16	195+24	HWY. 10 RT						1				
195+27	195+34	HWY. 10 RT						1				
195+86	196+88	HWY. 10 RT			220	8				1		
196+40	196+97	HWY. 10 LT			55							
196+55	196+28	HWY. 10 LT			117	11						
196+78	197+23	HWY. 10 RT								1		
197+06	197+64	HWY. 10 LT								1		
198+52	198+88	HWY. 10 RT	42									
241+94	242+41	HWY. 10 RT		75								
243+80	243+80	HWY. 96 LT										
402+83	402+84	S. COKER ST. RT										
408+65	408+66	S. COKER ST. RT									1	
500+63	500+63	E. CENTER ST. LT									1	
501+17	501+17	E. CENTER ST. LT									1	
502+30	502+32	E. CENTER ST. RT									1	
502+39	504+39	E. CENTER ST. RT							199			
502+79	502+79	E. CENTER ST. LT									1	
502+81	502+84	E. CENTER ST. LT									1	
503+69	504+41	E. CENTER ST. LT							74			
506+61	507+35	E. CENTER ST. RT							74			
506+61	508+24	E. CENTER ST. LT							200			
509+82	509+95	E. CENTER ST. LT					1				1	
520+10	522+13	E. CENTER ST. RT							265			
523+19	525+20	E. CENTER ST. RT							261			
527+75	527+82	E. CENTER ST. RT									1	
605+20	606+32	MAIN ST. RT								1		
605+64	605+97	MAIN ST. LT								1		
TOTALS:			267	75	392	31	3	4	1073	7	11	1

NOTE: THE QUANTITY SHOWN ABOVE FOR THE REMOVAL AND DISPOSAL OF GUARDRAIL SHALL INCLUDE

DATE REVISED	DATE REVISED	FED.RD. DIST.NO.	STATE	JOB NO.	SHEET NO.	TOTAL SHEETS
		6	ARK.	040861	76	291
		QUANTITIES				

STATE OF ARKANSAS LICENSED PROFESSIONAL ENGINEER No. 11425 TRINITY D. SMITH

09-28-2023

REMOVAL AND DISPOSAL OF FENCE

STATION	STATION	LOCATION	FENCE	GATES
			LIN. FT.	EACH
188+52	188+53	HWY. 10 RT	6	
189+03	189+79	HWY. 10 LT	122	
190+82	191+79	HWY. 10 LT	122	2
197+07	197+26	HWY. 10 LT	20	
197+26	198+27	HWY. 10 RT	36	
197+73	198+42	HWY. 10 LT	92	
199+35	199+84	HWY. 10 RT	98	
199+43	200+90	HWY. 10 LT	152	
228+77	228+92	HWY. 10 LT	116	
228+92	229+07	HWY. 10 RT	114	
238+08	238+35	HWY. 10 RT	96	
238+35	238+42	HWY. 10 LT	22	
246+10	247+02	HWY. 96 LT	87	
246+36	246+38	HWY. 96 RT	17	
247+27	248+07	HWY. 96 LT	79	
247+53	247+65	HWY. 96 RT	25	
247+81	247+95	HWY. 96 RT	25	
248+27	248+87	HWY. 96 LT	60	
403+95	404+04	S. COKER ST. RT	25	
406+21	408+05	S. COKER ST. RT	232	
406+87	407+38	S. COKER ST. LT	60	
502+11	502+12	E. CENTER ST. RT	16	
504+98	505+46	E. CENTER ST. RT	49	
506+70	510+32	E. CENTER ST. RT	361	
510+50	518+26	E. CENTER ST. RT	818	
529+76	530+45	E. CENTER ST. LT	83	
530+59	531+38	E. CENTER ST. LT	101	
602+60	603+03	MAIN ST. RT	76	
603+03	603+40	MAIN ST. LT	103	
TOTALS:			3213	2

CONCRETE DITCH PAVING

STATION	STATION	LOCATION	LENGTH	"W"	CONC. DITCH PAVING (TYPE B)	SOLID SODDING	WATER
			LIN. FT.	FEET	SQ. YD.	SQ. YD.	M. GAL.
204+50.00	204+50.00	HWY. 10 LT - TYPE SPECIAL DROP INLET	30.60	4.00	13.60	13.60	0.17
205+75.00	205+75.00	HWY. 10 RT - TYPE SPECIAL DROP INLET	49.70	4.00	22.09	22.09	0.28
211+20.00	211+20.00	HWY. 10 RT - TYPE SPECIAL DROP INLET	56.10	4.00	24.93	24.93	0.31
211+35.00	211+35.00	HWY. 10 LT - TYPE SPECIAL DROP INLET	48.75	4.00	21.67	21.67	0.27
213+00.00	213+00.00	HWY. 10 RT - TYPE SPECIAL DROP INLET	54.70	4.00	24.31	24.31	0.31
214+50.00	214+50.00	HWY. 10 RT - TYPE SPECIAL DROP INLET	53.55	4.00	23.80	23.80	0.30
216+00.00	216+00.00	HWY. 10 RT - TYPE SPECIAL DROP INLET	52.40	4.00	23.29	23.29	0.29
217+50.00	217+50.00	HWY. 10 RT - TYPE SPECIAL DROP INLET	51.20	4.00	22.76	22.76	0.29
224+50.00	224+50.00	HWY. 10 RT - TYPE SPECIAL DROP INLET	48.25	4.00	21.44	21.44	0.27
226+00.00	226+00.00	HWY. 10 RT - TYPE SPECIAL DROP INLET	44.70	4.00	19.87	19.87	0.25
227+84.00	227+84.00	HWY. 10 RT - TYPE SPECIAL DROP INLET	42.10	4.00	18.71	18.71	0.24
228+64.00	228+64.00	HWY. 10 RT - TYPE SPECIAL DROP INLET	40.75	4.00	18.11	18.11	0.23
229+47.00	229+47.00	HWY. 10 RT - TYPE SPECIAL DROP INLET	40.85	4.00	18.16	18.16	0.23
231+27.00	231+27.00	HWY. 10 LT - TYPE SPECIAL DROP INLET	40.30	4.00	17.91	17.91	0.23
231+27.00	231+27.00	HWY. 10 RT - TYPE SPECIAL DROP INLET	41.75	4.00	18.56	18.56	0.23
234+00.00	234+00.00	HWY. 10 LT - TYPE SPECIAL DROP INLET	39.65	4.00	17.62	17.62	0.22
234+00.00	234+00.00	HWY. 10 RT - TYPE SPECIAL DROP INLET	42.85	4.00	19.04	19.04	0.24
240+60.00	240+60.00	HWY. 10 LT - TYPE SPECIAL DROP INLET	29.40	4.00	13.07	13.07	0.16
508+50.00	508+50.00	E. CENTER ST. LT	48.20	3.50	18.74	21.42	0.27
508+50.00	508+50.00	E. CENTER ST. RT - TYPE SPECIAL DROP INLET	51.00	4.00	22.67	22.67	0.29
509+50.00	509+50.00	E. CENTER ST. RT - TYPE SPECIAL DROP INLET	51.95	4.00	23.09	23.09	0.29
510+10.00	510+10.00	E. CENTER ST. RT - TYPE SPECIAL DROP INLET	52.35	4.00	23.27	23.27	0.29
511+00.00	511+00.00	E. CENTER ST. RT - TYPE SPECIAL DROP INLET	52.45	4.00	23.31	23.31	0.29
511+50.00	511+50.00	E. CENTER ST. RT - TYPE SPECIAL DROP INLET	52.60	4.00	23.38	23.38	0.29
512+00.00	512+00.00	E. CENTER ST. RT - TYPE SPECIAL DROP INLET	52.55	4.00	23.36	23.36	0.29
512+50.00	512+50.00	E. CENTER ST. RT - TYPE SPECIAL DROP INLET	52.30	4.00	23.24	23.24	0.29
513+50.00	513+50.00	E. CENTER ST. RT - TYPE SPECIAL DROP INLET	53.90	4.00	23.96	23.96	0.30
514+00.00	514+00.00	E. CENTER ST. RT - TYPE SPECIAL DROP INLET	52.75	4.00	23.44	23.44	0.30
514+50.00	514+50.00	E. CENTER ST. RT - TYPE SPECIAL DROP INLET	55.80	4.00	24.80	24.80	0.31
515+00.00	515+00.00	E. CENTER ST. RT - TYPE SPECIAL DROP INLET	55.80	4.00	24.80	24.80	0.31
515+50.00	515+50.00	E. CENTER ST. RT - TYPE SPECIAL DROP INLET	55.50	4.00	24.67	24.67	0.31
516+35.00	516+35.00	E. CENTER ST. RT - TYPE SPECIAL DROP INLET	54.20	4.00	24.09	24.09	0.30
517+50.00	517+50.00	E. CENTER ST. RT - TYPE SPECIAL DROP INLET	51.60	4.00	22.93	22.93	0.29
518+75.00	518+75.00	E. CENTER ST. RT - TYPE SPECIAL DROP INLET	49.45	4.00	21.98	21.98	0.28
520+00.00	520+00.00	E. CENTER ST. RT - TYPE SPECIAL DROP INLET	20.35	4.00	9.04	9.04	0.11
520+05.00	520+05.00	E. CENTER ST. LT	51.40	3.50	19.99	22.84	0.29
521+00.00	521+00.00	E. CENTER ST. RT - TYPE SPECIAL DROP INLET	13.21	4.00	5.87	5.87	0.07
524+00.00	524+00.00	E. CENTER ST. RT - TYPE SPECIAL DROP INLET	20.90	4.00	9.29	9.29	0.12
525+00.00	525+00.00	E. CENTER ST. RT - TYPE SPECIAL DROP INLET	13.00	4.00	5.78	5.78	0.07
TOTALS:					780.64	786.17	9.88

BASIS OF ESTIMATE:
WATER.....12.6 GAL. / SQ. YD. OF SOLID SODDING.

EARTHWORK

STATION	STATION	LOCATION / DESCRIPTION	UNCLASSIFIED EXCAVATION	COMPACTED EMBANKMENT	GEOTEXTILE FABRIC (TYPE 9)	ROCK FILL
			CU. YD.		SQ. YD.	TON
ENTIRE	PROJECT	STAGE 1-MAIN LANES	11038	190810		
ENTIRE	PROJECT	STAGE 2-MAIN LANES	1833	28056		
ENTIRE	PROJECT	STAGE 3-MAIN LANES	1486	28420		
ENTIRE	PROJECT	APPROACHES	70	4445		
ENTIRE	PROJECT	TEMPORARY APPROACHES		320		
236+54	239+29	BRIDGE FILL		200		
504+04	507+51	BRIDGE CHANNEL EXCAVATION	3885			
521+14	523+76	BRIDGE CHANNEL EXCAVATION	2935			
209+10	209+50	TEMPORARY FILL SITE 1		65		
220+90	221+40	TEMPORARY FILL SITE 2		95		
237+60	238+50	TEMPORARY FILL SITE 3		165		
505+90	506+45	TEMPORARY FILL SITE 4		60		
522+30	522+80	TEMPORARY FILL SITE 5		95		
ENTIRE	PROJECT	UNDERCUT AND BACKFILL	48546	48546		
ENTIRE	PROJECT	UNDERCUT AND ROCK FILL AT BRIDGE ABUTMENTS	40270		24160	64410
TOTALS:			110063	301277	24160	64410

SOIL STABILIZATION

STATION	STATION	LOCATION / DESCRIPTION	SOIL STABILIZATION
			TON
ENTIRE	PROJECT	TO BE USED IF AND WHERE	500
		DIRECTED BY THE ENGINEER	
TOTAL:			500

QUANTITY ESTIMATED.
SEE SECTION 104.03 OF THE STD. SPECS.

QUANTITIES

rb43088 9/28/2023
R040861.DGN

STATE OF ARKANSAS LICENSED PROFESSIONAL ENGINEER No. 11425 TRINITY D. SMITH

10-25-2023

CONCRETE WALKS

STATION	STATION	LOCATION	LENGTH	CONCRETE WALKS
			LIN. FT.	SQ.YD.
186+16	186+93	HWY. 10 RT	77	43
186+19	192+14	HWY. 10 LT	595	661
187+37	188+96	HWY. 10 RT	159	88
189+40	192+08	HWY. 10 RT	268	149
192+74	193+54	HWY. 10 RT	80	44
192+75	195+98	HWY. 10 LT	323	359
194+06	195+39	HWY. 10 RT	133	74
195+89	239+74	HWY. 10 RT	4385	2436
196+52	212+87	HWY. 10 LT	1635	908
213+13	241+48	HWY. 10 LT	2835	1575
240+16	242+52	HWY. 10 RT	236	131
241+83	246+92	HWY. 10 LT	509	566
242+81	246+44	HWY. 10 RT	363	202
247+07	247+52	HWY. 10 RT	45	25
247+40	248+74	HWY. 10 LT	134	74
248+14	248+74	HWY. 10 RT	60	33
406+32	407+11	S. COKER ST. LT	79	44
406+41	407+13	S. COKER ST. RT	72	40
407+57	407+98	S. COKER ST. RT	41	23
408+52	408+55	S. COKER ST. RT	3	2
500+25	500+32	E. CENTER ST. LT	7	8
500+42	501+57	E. CENTER ST. RT	115	64
500+76	501+74	E. CENTER ST. LT	98	109
502+25	510+20	E. CENTER ST. RT	795	442
502+64	510+05	E. CENTER ST. LT	741	823
510+64	525+04	E. CENTER ST. RT	1440	800
515+49	524+79	E. CENTER ST. LT	930	1033
528+10	530+57	E. CENTER ST. RT	247	137
528+19	528+40	E. CENTER ST. LT	21	12
529+00	530+29	E. CENTER ST. LT	129	72
600+39	603+38	MAIN ST. LT	299	166
600+69	603+37	MAIN ST. RT	268	149
603+59	606+43	MAIN ST. LT	284	158
603+60	606+47	MAIN ST. RT	287	159
TOTALS:				11609

CONCRETE COMBINATION CURB AND GUTTER

STATION	STATION	LOCATION	TYPE A (1' 6")
			LIN. FT.
186+16	192+32	HWY. 10 RT	616
186+19	192+34	HWY. 10 LT	615
192+51	195+39	HWY. 10 RT	288
192+55	195+96	HWY. 10 LT	341
195+89	207+00	HWY. 10 RT	1111
196+52	207+15	HWY. 10 LT	1063
210+94	219+41	HWY. 10 RT	847
211+09	212+87	HWY. 10 LT	178
213+13	219+85	HWY. 10 LT	672
223+75	236+43	HWY. 10 RT	1268
223+97	236+58	HWY. 10 LT	1261
239+18	242+52	HWY. 10 RT	334
239+33	241+48	HWY. 10 LT	215
241+75	248+74	HWY. 10 LT	699
242+81	248+74	HWY. 10 RT	593
401+00	403+67	S. COKER ST. LT	267
401+10	404+23	S. COKER ST. RT	313
405+80	407+75	S. COKER ST. LT	195
406+41	408+64	S. COKER ST. RT	223
407+95	408+63	S. COKER ST. LT	68
500+25	501+89	E. CENTER ST. LT	164
500+25	503+97	E. CENTER ST. RT	372
502+45	504+09	E. CENTER ST. LT	164
507+45	521+19	E. CENTER ST. RT	1374
507+59	521+08	E. CENTER ST. LT	1349
523+70	525+06	E. CENTER ST. LT	136
523+80	525+04	E. CENTER ST. RT	124
528+10	530+63	E. CENTER ST. LT	253
528+19	530+65	E. CENTER ST. RT	246
600+58	606+53	MAIN ST. LT	595
600+58	606+53	MAIN ST. RT	595
TOTAL:			16539

FENCING

STATION	STATION	LOCATION	WIRE FENCE (TYPE A)	WIRE FENCE (TYPEC)	* 16'-0" GATES
			LIN. FT.		EACH
196+16	207+21	HWY. 10 LT	1098		
196+75	198+65	HWY. 10 RT	297		
199+45	202+75	HWY. 10 RT	358		
203+25	207+39	HWY. 10 RT	543		
207+05	207+05	HWY. 10 LT			1
210+71	212+76	HWY. 10 LT	343		
210+84	214+75	HWY. 10 RT	489		
211+01	211+04	HWY. 10 RT			1
213+24	217+75	HWY. 10 LT	486		
218+25	219+90	HWY. 10 LT	256		
219+90	219+91	HWY. 10 LT			1
223+70	223+71	HWY. 10 RT			1
223+62	226+75	HWY. 10 RT	375		
223+97	226+75	HWY. 10 LT	393		
227+25	232+75	HWY. 10 LT	567		
227+25	232+75	HWY. 10 RT	535		
232+92	233+08	HWY. 10 RT			1
233+25	236+61	HWY. 10 LT	401		
236+60	236+60	HWY. 10 LT			1
233+25	236+42	HWY. 10 RT	400		
239+16	239+17	HWY. 10 RT			1
239+16	239+53	HWY. 10 RT	104		
239+74	239+90	HWY. 10 RT			1
239+95	241+40	HWY. 10 RT	159		
507+43	507+47	E. CENTER ST. RT			1
507+43	518+92	E. CENTER ST. RT		99	
510+34	510+50	E. CENTER ST. RT			1
TOTALS:			6804	99	10

* DENOTES ALTERNATE BID ITEM.

4" PIPE UNDERDRAIN

STATION	STATION	LOCATIONS	4" PIPE UNDERDRAINS	UNDERDRAIN OUTLET PROTECTORS
			LIN. FT.	EACH
* ENTIRE PROJECT TO BE USED IF AND			2500	10
WHERE DIRECTED BY THE ENGINEER				
TOTALS:			2500	10

* NOTE: QUANTITY ESTIMATED.
SEE SECTION 104.03 OF THE STD. SPECS.

UNDERDRAINS SHALL BE STUBBED INTO THE PROPOSED DROP INLET IF AND WHERE DIRECTED BY THE ENGINEER. PAYMENT FOR THIS TO BE INCLUDED IN THE UNIT PRICE BID FOR 4" PIPE UNDERDRAIN.

SELECTED PIPE BEDDING

LOCATION	SELECTED PIPE BEDDING
	CU.YD.
ENTIRE PROJECT TO BE USED IF	
AND WHERE DIRECTED BY THE	470
ENGINEER	
TOTAL:	470

NOTE: QUANTITY ESTIMATED.
SEE SECTION 104.03 OF THE STD. SPECS.

EROSION CONTROL MATTING

STATION	STATION	LOCATION	LENGTH	CLASS 3
			LIN. FT.	SQ. YD.
196+60.00	201+64.00	HWY. 10 RT	504.00	448.00
201+64.00	207+16.00	HWY. 10 LT	552.00	490.67
211+10.00	212+40.00	HWY. 10 LT	130.00	115.56
239+38.00	241+15.00	HWY. 10 LT	177.00	157.33
245+17.00	246+45.00	HWY. 10 RT	128.00	113.78
247+00.00	247+45.00	HWY. 10 RT	45.00	40.00
247+45.00	248+80.00	HWY. 10 LT	135.00	120.00
248+00.00	248+80.00	HWY. 10 RT	80.00	71.11
401+45.00	402+05.00	S. COKER ST. LT	60.00	53.33
402+50.00	404+00.00	S. COKER ST. LT	150.00	133.33
408+00.00	408+63.00	S. COKER ST. LT	63.00	56.00
500+25.00	501+80.00	E. CENTER ST. LT	155.00	137.78
500+25.00	501+45.00	E. CENTER ST. RT	120.00	106.67
502+15.00	504+03.86	E. CENTER ST. RT	188.86	167.88
510+15.00	521+07.00	E. CENTER ST. LT	1092.00	970.67
523+76.14	524+70.00	E. CENTER ST. LT	93.86	83.43
523+76.14	524+00.00	E. CENTER ST. RT	23.86	21.21
527+90.00	528+40.00	E. CENTER ST. RT	50.00	44.44
528+00.00	530+00.00	E. CENTER ST. LT	200.00	177.78
TOTAL:				3508.97

NOTE: AVERAGE WIDTH = 8'-0"

CONCRETE WALKS (TYPE SPECIAL)

STATION	STATION	LOCATION	CONCRETE WALKS (TYPE SPECIAL)	HAND RAILING	ARCHITECTURAL FINISH	TEXTURED COATING FINISH
			SQ. YD.	LIN. FT.	SQ. FT.	SQ. YD.
191+25	192+05	HWY. 10 RT	44	80	219	18
TOTALS:			44	80	219	18

QUANTITIES

DATE REVISED	DATE REVISED	FED.RD. DIST.NO.	STATE	JOB NO.	SHEET NO.	TOTAL SHEETS
10-26-2023		6	ARK.	040861	78	291
		QUANTITIES				

STATE OF ARKANSAS
TRINITY D. SMITH
PROFESSIONAL ENGINEER
No. 11425

Digitally signed by Trinity Smith
Date: 2023.10.26 16:09:03-05'00'

WHEELCHAIR RAMPS

STATION	LOCATION	TYPE 3
		SQ.YD.
186+03	HWY. 10 LT	12.1
186+08	HWY. 10 RT	5.4
192+12	HWY. 10 RT	5.4
192+17	HWY. 10 LT	12.1
192+71	HWY. 10 RT	5.4
192+72	HWY. 10 LT	12.1
195+15	HWY. 10 RT	6.1
195+40	HWY. 10 LT	12.5
196+31	HWY. 10 RT	8.1
196+76	HWY. 10 LT	6.1
241+24	HWY. 10 LT	6.1
241+60	HWY. 10 RT	6.1
242+72	HWY. 10 LT	9.1
243+00	HWY. 10 RT	6.1
407+61	S. COKER ST. LT	5.4
408+58	S. COKER ST. RT	4.3
500+39	E. CENTER ST. RT	5.4
501+77	E. CENTER ST. LT	13.6
502+61	E. CENTER ST. LT	12.8
600+67	MAIN ST. LT	6.1
600+67	MAIN ST. RT	6.1
606+45	MAIN ST. LT	3.1
606+45	MAIN ST. RT	3.1
TOTALS:		172.6

CONCRETE ISLAND

STATION	LOCATION	CURB FACE TYPE	CONCRETE ISLAND
			SQ.YD.
195+47	HWY. 10 RT	A	28
196+35	HWY. 10 LT	A	25
241+70	HWY. 10 LT	A	55
241+75	HWY. 10 RT	A	55
242+55	HWY. 10 LT	A	55
242+59	HWY. 10 RT	A	42
TOTAL:			260

MAILBOXES

LOCATION	MAILBOXES	MAILBOX SUPPORTS (SINGLE)	MAILBOX SUPPORTS (DOUBLE)
	EACH		
ENTIRE PROJECT	16	10	2
TOTALS:	16	10	2

APPROACH GUTTERS AND SLABS

STATION	STATION	LOCATION	APPROACH GUTTER	APPROACH SLABS	REINFORCING STEEL-RDWY. (GR. 60)	AGGREGATE BASE CRS. (CLASS 7)
			CU.YD.	CU.YD.	POUND	TON
206+72.86	207+07.86	HWY. 10 SITE 1 - BRIDGE NO. 07641		111.70	13590	50.81
211+01.14	211+36.14	HWY. 10 SITE 1 - BRIDGE NO. 07641		111.70	13590	50.81
219+28.59	219+63.59	HWY. 10 SITE 2 - BRIDGE NO. 07642		117.80	14590	50.81
223+86.19	224+21.19	HWY. 10 SITE 2 - BRIDGE NO. 07642		112.80	13750	50.81
236+18.86	236+53.86	HWY. 10 SITE 3 - BRIDGE NO. 07643		111.70	13590	50.81
239+29.14	239+64.14	HWY. 10 SITE 3 - BRIDGE NO. 07643		111.70	13590	50.81
503+68.86	504+03.86	HWY. 10 SITE 4 - BRIDGE NO. 07644	9.90	71.90	8770	32.67
507+51.14	507+86.14	HWY. 10 SITE 4 - BRIDGE NO. 07644	9.50	71.90	8770	32.67
520+78.86	521+13.86	HWY. 10 SITE 5 - BRIDGE NO. 07645	9.80	71.90	8770	32.67
523+76.14	524+11.14	HWY. 10 SITE 5 - BRIDGE NO. 07645	10.00	71.90	8770	32.67
TOTALS:			39.20	965.00	117780	435.54

DUMPED RIPRAP AND FILTER BLANKET

STATION	LOCATION	DUMPED RIPRAP	FILTER BLANKET
		CU. YD.	SQ. YD.
204+50	HWY. 10 LT, BOTTOM OF DITCH PAVING	3	6
204+51	HWY. 10 RT, BOTTOM OF DITCH PAVING	3	6
211+20	HWY. 10 RT, BOTTOM OF DITCH PAVING	3	6
211+35	HWY. 10 LT, BOTTOM OF DITCH PAVING	3	6
213+00	HWY. 10 RT, BOTTOM OF DITCH PAVING	3	6
214+50	HWY. 10 RT, BOTTOM OF DITCH PAVING	3	6
216+00	HWY. 10 RT, BOTTOM OF DITCH PAVING	3	6
217+50	HWY. 10 RT, BOTTOM OF DITCH PAVING	3	6
224+50	HWY. 10 RT, BOTTOM OF DITCH PAVING	3	6
226+00	HWY. 10 RT, BOTTOM OF DITCH PAVING	3	6
227+83	HWY. 10 RT, BOTTOM OF DITCH PAVING	3	6
228+65	HWY. 10 RT, BOTTOM OF DITCH PAVING	3	6
229+47	HWY. 10 RT, BOTTOM OF DITCH PAVING	3	6
231+27	HWY. 10 LT, BOTTOM OF DITCH PAVING	3	6
231+27	HWY. 10 RT, BOTTOM OF DITCH PAVING	3	6
234+00	HWY. 10 LT, BOTTOM OF DITCH PAVING	3	6
234+00	HWY. 10 RT, BOTTOM OF DITCH PAVING	3	6
240+57	HWY. 10 LT, BOTTOM OF DITCH PAVING	3	6
508+50	E. CENTER ST. LT, BOTTOM OF DITCH PAVING	3	6
508+50	E. CENTER ST. RT, BOTTOM OF DITCH PAVING	3	6
509+50	E. CENTER ST. RT, BOTTOM OF DITCH PAVING	3	6
510+10	E. CENTER ST. RT, BOTTOM OF DITCH PAVING	3	6
511+00	E. CENTER ST. RT, BOTTOM OF DITCH PAVING	3	6
511+50	E. CENTER ST. RT, BOTTOM OF DITCH PAVING	3	6
512+00	E. CENTER ST. RT, BOTTOM OF DITCH PAVING	3	6
512+50	E. CENTER ST. RT, BOTTOM OF DITCH PAVING	3	6
513+50	E. CENTER ST. RT, BOTTOM OF DITCH PAVING	3	6
514+00	E. CENTER ST. RT, BOTTOM OF DITCH PAVING	3	6
515+50	E. CENTER ST. RT, BOTTOM OF DITCH PAVING	3	6
516+35	E. CENTER ST. RT, BOTTOM OF DITCH PAVING	3	6
517+50	E. CENTER ST. RT, BOTTOM OF DITCH PAVING	3	6
518+75	E. CENTER ST. RT, BOTTOM OF DITCH PAVING	3	6
520+00	E. CENTER ST. RT, BOTTOM OF DITCH PAVING	3	6
520+05	E. CENTER ST. LT, BOTTOM OF DITCH PAVING	3	6
521+00	E. CENTER ST. RT, BOTTOM OF DITCH PAVING	3	6
521+85	E. CENTER ST. LT	440	880
522+45	E. CENTER ST. LT	342	684
525+46	E. CENTER ST. RT, BOTTOM OF DITCH PAVING	3	6
TOTALS:		890	1780

*NOTE: QUANTITY ESTIMATED.
SEE SECTION 104.03 OF THE STANDARD SPECIFICATIONS

STATE OF ARKANSAS LICENSED PROFESSIONAL ENGINEER No. 11425 TRINITY D. SMITH

09-27-2023

SOIL LOG

STATION	LATITUDE			LONGITUDE			LOCATION	DEPTH	LIQUID LIMIT	PLASTICITY INDEX	AASHTO CLASSIFICATION	COLOR
	DEG	MIN	SEC	DEG	MIN	SEC		FEET				
191+00	35	12	24.80	94	15	40.70	05 RT	0 - 5	20	6	A - 4 (1)	BROWN
191+00	35	12	24.70	94	15	40.70	24 RT	0 - 5	18	3	A - 4 (0)	GRAY
199+00	35	12	26.50	94	15	31.20	CL	0 - 5	24	10	A - 4 (6)	BROWN
206+00	35	12	30.60	94	15	24.50	CL	0 - 5	25	8	A - 4 (2)	GRAY
207+00	35	12	31.30	94	15	25.50	100 LT	0 - 5	25	8	A - 4 (1)	GRAY
207+00	35	12	35.80	94	14	42.40	100 LT	0 - 5	24	7	A - 4 (1)	GRAY
214+00	35	12	36.10	94	15	17.50	CL	0 - 5	22	3	A - 4 (1)	BROWN
222+00	35	12	39.00	94	15	8.70	CL	0 - 5	24	17	A - 6 (12)	BROWN
230+00	35	12	37.70	94	14	59.30	CL	0 - 5	26	7	A - 4 (6)	BROWN
237+00	35	12	35.10	94	14	51.60	CL	0 - 5	24	6	A - 4 (4)	BROWN
245+00	35	12	35.90	94	14	42.50	06 RT	0 - 5	22	8	A - 4 (3)	BROWN
245+00	35	12	35.80	94	14	42.40	16 RT	0 - 5	22	7	A - 4 (2)	BROWN
245+00	35	12	35.80	94	14	42.40	25 RT	0 - 5	20	6	A - 4 (1)	BROWN
402+00	35	12	22.20	94	15	35.10	21 LT	0 - 5	18	3	A - 4 (1)	BROWN
408+00	35	12	28.50	94	15	34.60	05 RT	0 - 5	24	10	A - 4 (3)	BR/GR
408+00	35	12	28.50	94	15	34.50	15 RT	0 - 5	ND	NP	A - 4 (1)	BR/GR
503+00	35	12	44.50	94	15	11.70	06 RT	0 - 5	32	12	A - 6 (7)	BR/GR
511+00	35	12	43.60	94	15	3.10	05 LT	0 - 5	21	5	A - 4 (1)	GRAY
511+00	35	12	43.70	94	15	3.10	18 LT	0 - 5	22	6	A - 4 (3)	GRAY
511+00	35	12	43.80	94	15	3.10	30 LT	0 - 5	28	11	A - 6 (4)	GRAY
519+00	35	12	40.40	94	14	54.10	06 RT	0 - 5	22	5	A - 4 (2)	GRAY
519+00	35	12	40.40	94	14	54.10	16 RT	0 - 5	23	5	A - 4 (2)	BR/GR
519+00	35	12	40.40	94	14	54.20	25 RT	0 - 5	30	8	A - 4 (4)	BR/GR

SOIL CHARACTERISTICS TABULATED ABOVE ARE REPRESENTATIVE AT THE LOCATION OF THE SAMPLE, AND FROM SURFACE INDICATIONS ARE TYPICAL FOR THE LIMITS SHOWN. THESE DATA ARE SHOWN FOR INFORMATION ONLY. THE STATE WILL NOT BE RESPONSIBLE FOR VARIATIONS IN THE SOIL CHARACTERISTICS AND/OR EXTENT OF SAME DIFFERING FROM THE ABOVE TABULATIONS.
Z- AUGER REFUSAL
NP - NON-PLASTIC
ND - NOT DETERMINABLE

ACHM PATCHING OF EXISTING ROADWAY

DESCRIPTION	TON
ENTIRE PROJECT - TO BE USED IF AND WHERE	50
DIRECTED BY THE ENGINEER	
TOTAL:	**50**

NOTE: QUANTITY ESTIMATED.
SEE SECTION 104.03 OF THE STD. SPECS.

ASPHALT CONCRETE PATCHING FOR MAINTENANCE OF TRAFFIC

LOCATION	TON	TACK COAT GALLON
ENTIRE PROJECT - TO BE USED IF AND WHERE	30	60
DIRECTED BY THE ENGINEER		
TOTALS:	**30**	**60**

BASIS OF ESTIMATE:
ASPHALT CONCRETE PATCHING FOR MAINTENANCE OF TRAFFIC...25 TON/MILE
TACK COAT FOR MAINTENANCE OF TRAFFIC.....50 GAL./MILE

PAVEMENT REPAIR OVER CULVERTS (CONCRETE)

STATION	LOCATION	WIDTH	LENGTH	CU.YD.
		FEET		
190+25	HWY. 10	10.83	23	6.9
243+16	HWY. 10	8.50	22	5.2
245+28	HWY. 10	8.50	16	3.8
401+95	S. COKER ST.	18.50	35	18.0
TOTAL:				**33.9**

AVG. DEPTH = 9"

EROSION CONTROL

STATION	STATION	LOCATION	PERMANENT EROSION CONTROL					TEMPORARY EROSION CONTROL											
			SEEDING	LIME	MULCH COVER	WATER	SECOND SEEDING APPLICATION	TEMPORARY SEEDING	MULCH COVER	WATER	SAND BAG DITCH CHECKS (E-5)	ROCK DITCH CHECKS (E-6)	SILT FENCE (E-11)	DIVERSION DITCH (E-8)	PIPE FOR SLOPE DRAINS SLOPE DRAIN (E-12)	DROP INLET FILTER SOCK (12") (E-13)	SEDIMENT BASIN (E-14)	OBLITERATION OF SEDIMENT BASIN	*SEDIMENT REMOVAL & DISPOSAL
			ACRE	TON	ACRE	M.GAL.	ACRE	ACRE	ACRE	M.GAL.	BAG	CU.YD.	LIN. FT.	LIN. FT.	LIN. FT.	LIN. FT.	CU.YD.	CU.YD.	CU. YD.
ENTIRE	PROJECT	CLEARING AND GRUBBING						42.73	42.73	871.7	638	90	5705						270
ENTIRE	PROJECT	STAGE 1	9.91	19.82	9.91	1010.3	9.91	20.56	20.56	419.4	308	48	807			934			60
ENTIRE	PROJECT	STAGE 2	1.79	3.58	1.79	182.6	1.79	3.64	3.64	74.3	88	12				655			8
ENTIRE	PROJECT	STAGE 3	3.00	6.00	3.00	306.0	3.00	5.48	5.48	111.8	44	12	1378			849			57
*ENTIRE PROJECT TO BE USED IF AND WHERE DIRECTED BY THE ENGINEER.											264	42	546	550	22	610	2960	2960	3006
TOTALS:			**14.70**	**29.40**	**14.70**	**1499.4**	**14.70**	**72.41**	**72.41**	**1477.2**	**1342**	**204**	**8436**	**550**	**22**	**3048**	**2960**	**2960**	**3401**

BASIS OF ESTIMATE:
LIME .....2 TONS / ACRE OF SEEDING
WATER.....102.0 M.G. / ACRE OF SEEDING
WATER.....20.4 M.G. / ACRE OF TEMPORARY SEEDING
SAND BAG DITCH CHECKS.....22 BAGS / LOCATION
ROCK DITCH CHECKS.....3 CU.YD./LOCATION
FILTER SOCKS.....23 LIN. FT./ 4' DIA. INLET
27 LIN. FT. / 5' DIA. INLET
30 LIN. FT. / 6' DIA. INLET

NOTE: THE TEMPORARY EROSION CONTROL DEVICES SHOWN ABOVE AND ON THE PLANS SHALL BE INSTALLED IN SUCH A SEQUENCE AS TO DETER EROSION AND SEDIMENTATION ON U.S. WATERWAYS AS EXPLAINED BY THE NATIONAL POLLUTANT DISCHARGE ELIMINATION SYSTEM PERMIT.

*QUANTITIES ESTIMATED.
SEE SECTION 104.03 OF THE STD. SPECS.

DATE REVISED	DATE REVISED	FED.RD. DIST.NO.	STATE	JOB NO.	SHEET NO.	TOTAL SHEETS
10-24-2023		6	ARK.	040861	80	291
		QUANTITIES				

STATE OF ARKANSAS LICENSED PROFESSIONAL ENGINEER No. 11425 TRINITY D. SMITH

10-25-2023

DRIVEWAYS & TURNOUTS

STATION	SIDE	LOCATION	WIDTH	**MODIFIED CURB		PORTLAND CEMENT CONCRETE DRIVEWAY	ACHM SURFACE COURSE (1/2") 220 LBS. PER SQ. YD. (PG 64-22)		AGGREGATE BASE COURSE (CLASS 7)	SIDE DRAINS 18"	STANDARD DRAWINGS
			FEET	STATION	STATION	SQ. YD.	SQ. YD.	TON	TON	LIN. FT.	
187+15	RT	HWY. 10	16	186+93	187+37		61.33	6.75	25.04		
189+18	RT	HWY. 10	16	188+96	189+40		79.11	8.70	32.30		
192+41	RT	HWY. 10	20	192+17	192+65		60.83	6.69	24.84		
192+45	LT	HWY. 10	20	192+21	192+69		134.80	14.83	55.04		
193+80	RT	HWY. 10	26	193+53	194+07		141.89	15.61	57.94		
233+00	RT	HWY. 10	20	232+76	233+24		254.89	28.04	104.08	92	PCC-1, PCM-1, PCP-1, PCP-2, PCP-3
239+82	RT	HWY. 10	16	239+60	240+04		184.00	20.24	75.13	70	PCC-1, PCM-1, PCP-1, PCP-2, PCP-3
244+25	RT	HWY. 10	20	244+01	244+49		145.56	16.01	59.44		
246+75	RT	HWY. 10	36	246+43	247+07		115.33	12.69	47.09		
247+16	LT	HWY. 10	20	246+92	247+40		93.89	10.33	38.34		
247+83	RT	HWY. 10	34	247+52	248+14		85.37	9.39	34.86		
400+65	LT	S. COKER ST.	20				177.50	19.53	72.48		
401+02	RT	S. COKER ST.	16	400+80	401+24		77.42	8.52	31.61		
402+19	RT	S. COKER ST.	40	401+85	402+53	163.46					
402+69	LT	S. COKER ST.	16	402+47	402+91		92.92	10.22	37.94		
406+10	LT	S. COKER ST.	16	405+88	406+32	117.12					
407+33	LT	S. COKER ST.	16	407+11	407+55	75.47					
407+35	RT	S. COKER ST.	16	407+13	407+57		97.39	10.71	39.77		
407+85	LT	S. COKER ST.	20	407+61	408+09		54.80	6.03	22.38		
408+25	RT	S. COKER ST.	26	407+98	408+52	163.32					
409+09	LT	S. COKER ST.	16	408+87	409+31	42.19					
409+11	RT	S. COKER ST.	28	408+83	409+39	52.89					
500+54	LT	E. CENTER ST.	16	500+32	500+76		55.80	6.14	22.79		
501+91	RT	E. CENTER ST.	40	501+57	502+25		169.33	18.63	69.14		
502+33	LT	E. CENTER ST.	40	501+99	502+67		174.93	19.24	71.43		
510+42	RT	E. CENTER ST.	16	510+20	510+64		239.09	26.30	97.63		
515+27	LT	E. CENTER ST.	16	515+05	515+49		232.57	25.58	94.97	80	PCC-1, PCM-1, PCP-1, PCP-2, PCP-3
525+00	LT	E. CENTER ST.	16	524+78	525+22		225.15	24.77	91.94		
528+70	LT	E. CENTER ST.	30	528+41	528+99		76.03	8.36	31.05		
530+51	LT	E. CENTER ST.	16	530+29	530+73		58.15	6.40	23.74		
532+14	LT	E. CENTER ST.	20				80.13	8.81	32.72		
532+95	LT	E. CENTER ST.	16				50.67	5.57	20.69		
* ENTIRE PROJECT TEMPORARY DRIVES									320.00		
TOTALS:						**614.45**	**3218.88**	**354.09**	**1634.38**	**242**	

BASIS OF ESTIMATE:
ACHM SURFACE COURSE (1/2").....94.2% MIN. AGGR.....5.8% ASPHALT BINDER
MAXIMUM NUMBER OF GYRATIONS = 115 FOR PG 64-22

THE CONTRACTOR, WITH THE APPROVAL OF THE ENGINEER, WILL BE ALLOWED TO SUBSTITUTE A HIGHER PERFORMANCE GRADE ASPHALT SURFACE COURSE FOR DRIVEWAYS AND MINOR SIDE STREET CONSTRUCTION AT NO ADDITIONAL COST TO THE DEPARTMENT.

* QUANTITY ESTIMATED
SEE SECTION 104.03 OF THE STD. SPECS.
TO BE USED IF AND WHERE DIRECTED BY THE ENGINEER.

** FOR INFORMATION ONLY

NOTE: FOR R.C. PIPE CULVERT INSTALLATIONS USE TYPE 3 BEDDING UNLESS OTHERWISE SPECIFIED.

rb43088 10/24/2023
R040861.DGN

STATE OF ARKANSAS LICENSED PROFESSIONAL ENGINEER No. 11425 TRINITY D. SMITH

09-27-2023

STRUCTURES (BOX 1 OF 2)

STATION	DESCRIPTION	PIPE CULVERT STORM DRAIN ALTERNATES 1, 2, 3, 4, & 5					FLARED END SECTIONS FOR R.C. PIPE CULVERTS					DROP INLETS					JUNCT. BOXES	STD. DWG. NOS.
												TYPE			EXT.			
		18"	24"	30"	48"	44"X27"	18"	24"	30"	48"	44"X27"	C	MO	SPECIAL	4'	8'	(TYPE E)	
		LIN. FT.					EACH					EACH						
186+84	CONSTRUCT DROP INLET ON LT W/ PIPE OUTLET	341											1		1			FPC-9E, FPC-9M, PCC-1, PCM-1, PCP-1, PCP-2, PCP-3
186+84	CONSTRUCT DROP INLET ON RT W/ PIPE OUTLET	185											1		1			FPC-9E, FPC-9M, PCC-1, PCM-1, PCP-1, PCP-2, PCP-3
188+69	CONSTRUCT DROP INLET ON RT W/ PIPE OUTLET	156											1					FPC-9E, FPC-9M, PCC-1, PCM-1, PCP-1, PCP-2, PCP-4
190+25	CONSTRUCT DROP INLET ON LT W/ PIPE INLET W/ F.E.S. AND W/ PIPE OUTLET				83					1			1					FPC-9E, FPC-9M, PCC-1, PCM-1, PCP-1, PCP-2, PCP-5
190+25	CONSTRUCT DROP INLET ON RT W/ PIPE OUTLET AND JUNCTION BOX 31.38' FROM C.L.				29								1				1	FPC-9, FPC-9M, PCC-1, PCM-1, PCP-1, PCP-2, PCP-3
191+93	CONSTRUCT DROP INLET ON RT W/ PIPE OUTLET	168											1					FPC-9E, FPC-9M, PCC-1, PCM-1, PCP-1, PCP-2, PCP-3
191+95	CONSTRUCT DROP INLET ON LT W/ PIPE INLET W/ F.E.S. AND W/ PIPE OUTLET	61					1						1		1			FPC-9E, FPC-9M, PCC-1, PCM-1, PCP-1, PCP-2, PCP-3
192+32	CONSTRUCT DROP INLET ON LT W/ PIPE INLET W/ F.E.S. AND W/ PIPE OUTLET	88					1						1					FPC-9E, FPC-9M, PCC-1, PCM-1, PCP-1, PCP-2, PCP-3
192+88	CONSTRUCT DROP INLET ON LT W/ PIPE OUTLET	169											1					FPC-9E, FPC-9M, PCC-1, PCM-1, PCP-1, PCP-2, PCP-3
194+60	CONSTRUCT DROP INLET ON LT W/ PIPE INLET AND W/ PIPE OUTLET	16	41										1			1		FPC-9E, FPC-9M, PCC-1, PCM-1, PCP-1, PCP-2, PCP-3
194+60	CONSTRUCT JUNCTION BOX ON RT W/ PIPE OUTLET		54														1	FPC-9, FPC-9M, PCC-1, PCM-1, PCP-1, PCP-2, PCP-3
195+18	CONSTRUCT DROP INLET ON LT W/ PIPE OUTLET	57											1					FPC-9E, FPC-9M, PCC-1, PCM-1, PCP-1, PCP-2, PCP-3
196+99	CONSTRUCT JUNCTION BOX ON LT W/ PIPE OUTLET	52															1	FPC-9, FPC-9M, PCC-1, PCM-1, PCP-1, PCP-2, PCP-3
197+50	CONSTRUCT DROP INLET ON LT W/ PIPE OUTLET	196											1					FPC-9E, FPC-9M, PCC-1, PCM-1, PCP-1, PCP-2, PCP-3
199+50	CONSTRUCT DROP INLET ON LT W/ PIPE OUTLET	149											1					FPC-9E, FPC-9M, PCC-1, PCM-1, PCP-1, PCP-2, PCP-3
201+02	CONSTRUCT DROP INLET ON LT W/ PIPE OUTLET	61											1		1			FPC-9E, FPC-9M, PCC-1, PCM-1, PCP-1, PCP-2, PCP-3
201+64	CONSTRUCT DROP INLET ON LT W/ PIPE OUTLET	61											1					FPC-9E, FPC-9M, PCC-1, PCM-1, PCP-1, PCP-2, PCP-3
202+26	CONSTRUCT DROP INLET ON LT W/ PIPE OUTLET W/ F.E.S.		16					1					1		1			FPC-9E, FPC-9M, PCC-1, PCM-1, PCP-1, PCP-2, PCP-3
204+50	CONSTRUCT DROP INLET ON LT													1	1			SPECIAL DETAILS
205+75	CONSTRUCT DROP INLET ON RT													1				SPECIAL DETAILS
211+20	CONSTRUCT DROP INLET ON RT													1				SPECIAL DETAILS
211+35	CONSTRUCT DROP INLET ON LT													1				SPECIAL DETAILS
213+00	CONSTRUCT DROP INLET ON RT													1				SPECIAL DETAILS
214+50	CONSTRUCT DROP INLET ON RT													1				SPECIAL DETAILS
216+00	CONSTRUCT DROP INLET ON RT													1				SPECIAL DETAILS
217+50	CONSTRUCT DROP INLET ON RT													1				SPECIAL DETAILS
224+50	CONSTRUCT DROP INLET ON RT													1				SPECIAL DETAILS
226+00	CONSTRUCT DROP INLET ON RT													1				SPECIAL DETAILS
227+83	CONSTRUCT DROP INLET ON RT													1				SPECIAL DETAILS
228+64	CONSTRUCT DROP INLET ON RT													1				SPECIAL DETAILS
229+47	CONSTRUCT DROP INLET ON RT													1				SPECIAL DETAILS
231+27	CONSTRUCT DROP INLET ON LT													1	1			SPECIAL DETAILS
231+27	CONSTRUCT DROP INLET ON RT													1	1			SPECIAL DETAILS
234+00	CONSTRUCT DROP INLET ON LT													1	1			SPECIAL DETAILS
234+00	CONSTRUCT DROP INLET ON RT													1				SPECIAL DETAILS
240+60	CONSTRUCT DROP INLET ON LT													1				SPECIAL DETAILS
240+70	CONSTRUCT DROP INLET ON RT W/ PIPE OUTLET W/ F.E.S.	23					1						1		1			FPC-9E, FPC-9M, PCC-1, PCM-1, PCP-1, PCP-2, PCP-3
243+16	CONSTRUCT DROP INLET ON LT W/ PIPE OUTLET		38										1					FPC-9E, FPC-9M, PCC-1, PCM-1, PCP-1, PCP-2, PCP-3
243+16	CONSTRUCT DROP INLET ON RT W/ PIPE OUTLET		75										1					FPC-9E, FPC-9M, PCC-1, PCM-1, PCP-1, PCP-2, PCP-3
243+81	CONSTRUCT DROP INLET ON LT W/ PIPE OUTLET		64										1					FPC-9E, FPC-9M, PCC-1, PCM-1, PCP-1, PCP-2, PCP-3
244+25	CONSTRUCT DROP INLET ON LT W/ PIPE OUTLET		43										1					FPC-9E, FPC-9M, PCC-1, PCM-1, PCP-1, PCP-2, PCP-3
244+75	CONSTRUCT DROP INLET ON LT W/ PIPE OUTLET		49										1					FPC-9E, FPC-9M, PCC-1, PCM-1, PCP-1, PCP-2, PCP-3
245+28	CONSTRUCT DROP INLET ON LT W/ PIPE OUTLET		47					1					1					FPC-9E, FPC-9M, PCC-1, PCM-1, PCP-1, PCP-2, PCP-3
245+28	CONSTRUCT JUNCTION BOX ON RT W/ PIPE INLET W/ F.E.S. AND W/ PIPE OUTLET		51														1	FPC-9E, FPC-9M, PCC-1, PCM-1, PCP-1, PCP-2, PCP-3
246+25	CONSTRUCT DROP INLET ON LT W/ PIPE OUTLET	94											1		1			FPC-9E, FPC-9M, PCC-1, PCM-1, PCP-1, PCP-2, PCP-3
246+75	CONSTRUCT DROP INLET ON LT W/ PIPE OUTLET	190											1		1			FPC-9E, FPC-9M, PCC-1, PCM-1, PCP-1, PCP-2, PCP-3
247+44	CONSTRUCT DROP INLET ON RT W/ PIPE INLET W/ F.E.S. AND W/ PIPE OUTLET	119					1						1					FPC-9E, FPC-9M, PCC-1, PCM-1, PCP-1, PCP-2, PCP-3
248+55	CONSTRUCT DROP INLET ON RT W/ PIPE OUTLET W/ F.E.S.	26					1						1					FPC-9E, FPC-9M, PCC-1, PCM-1, PCP-1, PCP-2, PCP-3
248+65	CONSTRUCT DROP INLET ON LT W/ PIPE OUTLET W/ F.E.S.	19					1						1			1		FPC-9E, FPC-9M, PCC-1, PCM-1, PCP-1, PCP-2, PCP-3
401+95	CONSTRUCT DROP INLET ON LT W/ DBL. PIPE INLET W/ F.E.S. AND W/ DBL. PIPE OUTLET					298					2	1						FPC-9E, PCC-1, PCM-1, PCP-1, PCP-2, PCP-3
403+00	CONSTRUCT JUNCTION BOX ON RT																1	FPC-9, FPC-9M, PCC-1, PCM-1, PCP-1, PCP-2, PCP-3
403+01	CONSTRUCT DROP INLET ON LT W/ PIPE OUTLET		107										1			1		FPC-9E, FPC-9M, PCC-1, PCM-1, PCP-1, PCP-2, PCP-3
404+00	CONSTRUCT DROP INLET ON LT W/ PIPE INLET W/ F.E.S. AND W/ PIPE OUTLET	20	99				1						1		1			FPC-9E, FPC-9M, PCC-1, PCM-1, PCP-1, PCP-2, PCP-3
404+34	CONSTRUCT JUNCTION BOX ON LT W/ PIPE OUTLET	46															1	FPC-9, FPC-9M, PCC-1, PCM-1, PCP-1, PCP-2, PCP-3
405+81	CONSTRUCT DROP INLET ON LT W/ PIPE OUTLET	119											1		1			FPC-9E, FPC-9M, PCC-1, PCM-1, PCP-1, PCP-2, PCP-3
405+95	CONSTRUCT JUNCTION BOX ON RT W/ PIPE OUTLET	50															1	FPC-9, FPC-9M, PCC-1, PCM-1, PCP-1, PCP-2, PCP-3
406+45	CONSTRUCT DROP INLET ON RT W/ PIPE OUTLET	53											1		1			FPC-9E, FPC-9M, PCC-1, PCM-1, PCP-1, PCP-2, PCP-3
407+00	CONSTRUCT DROP INLET ON LT W/ PIPE INLET AND W/ PIPE OUTLET	71											1			1		FPC-9E, FPC-9M, PCC-1, PCM-1, PCP-1, PCP-2, PCP-3
407+70	CONSTRUCT DROP INLET ON LT W/ PIPE INLET W/ F.E.S. AND W/ PIPE OUTLET	41											1					FPC-9E, FPC-9M, PCC-1, PCM-1, PCP-1, PCP-2, PCP-3
407+70	CONSTRUCT DROP INLET ON RT W/ PIPE OUTLET	58											1			1		FPC-9E, FPC-9M, PCC-1, PCM-1, PCP-1, PCP-2, PCP-3
407+90	CONSTRUCT DROP INLET ON RT W/ PIPE OUTLET	87											1					FPC-9E, FPC-9M, PCC-1, PCM-1, PCP-1, PCP-2, PCP-3
407+97	CONSTRUCT DROP INLET ON LT W/ PIPE INLET W/ F.E.S. AND W/ PIPE OUTLET	66					1						1					FPC-9E, FPC-9M, PCC-1, PCM-1, PCP-1, PCP-2, PCP-3
408+50	CONSTRUCT DROP INLET ON LT W/ PIPE INLET AND W/ PIPE OUTLET W/ F.E.S.	41					1						1					FPC-9E, FPC-9M, PCC-1, PCM-1, PCP-1, PCP-2, PCP-3
500+50	CONSTRUCT DROP INLET ON RT W/ PIPE OUTLET	60											1		1			FPC-9E, FPC-9M, PCC-1, PCM-1, PCP-1, PCP-2, PCP-3
501+10	CONSTRUCT DROP INLET ON LT W/ PIPE OUTLET	41											1					FPC-9E, FPC-9M, PCC-1, PCM-1, PCP-1, PCP-2, PCP-3
501+10	CONSTRUCT DROP INLET ON RT W/ PIPE OUTLET	41											1					FPC-9E, FPC-9M, PCC-1, PCM-1, PCP-1, PCP-2, PCP-3
501+51	CONSTRUCT DROP INLET ON LT W/ PIPE OUTLET	130											1					FPC-9E, FPC-9M, PCC-1, PCM-1, PCP-1, PCP-2, PCP-3
501+51	CONSTRUCT DROP INLET ON RT W/ PIPE OUTLET	85											1					FPC-9E, FPC-9M, PCC-1, PCM-1, PCP-1, PCP-2, PCP-3
502+35	CONSTRUCT DROP INLET ON RT W/ PIPE OUTLET	133											1					FPC-9E, FPC-9M, PCC-1, PCM-1, PCP-1, PCP-2, PCP-3
502+80	CONSTRUCT DROP INLET ON LT W/ PIPE OUTLET	92											1					FPC-9E, FPC-9M, PCC-1, PCM-1, PCP-1, PCP-2, PCP-3
503+70	CONSTRUCT DROP INLET ON LT W/ PIPE OUTLET W/ F.E.S.	35					1						1		1			FPC-9E, FPC-9M, PCC-1, PCM-1, PCP-1, PCP-2, PCP-3
503+70	CONSTRUCT DROP INLET ON RT W/ PIPE OUTLET W/ F.E.S.	25					1						1					FPC-9E, FPC-9M, PCC-1, PCM-1, PCP-1, PCP-2, PCP-3
508+50	CONSTRUCT DROP INLET ON LT W/ PIPE OUTLET W/ F.E.S.	16					1											FPC-9E, FPC-9M, PCC-1, PCM-1, PCP-1, PCP-2, PCP-3
508+50	CONSTRUCT DROP INLET ON RT													1				SPECIAL DETAILS
509+50	CONSTRUCT DROP INLET ON RT													1				SPECIAL DETAILS
510+10	CONSTRUCT DROP INLET ON RT													1				SPECIAL DETAILS
SUBTOTALS (BOX 1 OF 2):		**3541**	**684**		**112**	**298**	**12**	**2**		**1**	**2**	**1**	**47**	**21**	**17**	**5**	**7**	

BASIS OF ESTIMATE:
WATER.....12.6 GAL. / SQ. YD. OF SOLID SODDING

NOTE: FOR R.C. PIPE CULVERT INSTALLATIONS USE TYPE 3 BEDDING UNLESS OTHERWISE SPECIFIED.

NOTE: FOR C.M. PIPE CULVERT INSTALLATIONS USE TYPE 2 BEDDING UNLESS OTHERWISE SPECIFIED.

STATE OF ARKANSAS LICENSED PROFESSIONAL ENGINEER No. 11425 TRINITY D. SMITH

09-27-2023

STRUCTURES (BOX 2 OF 2)

STATION	DESCRIPTION	PIPE CULVERT STORM DRAIN ALTERNATES 1, 2, 3, 4, & 5					FLARED END SECTIONS FOR STORM DRAIN ALTERNATES					DROP INLETS					JUNCT. BOXES	STD. DWG. NOS.
												TYPE			EXT.			
		18"	24"	30"	48"	44"X27"	18"	24"	30"	48"	44"X27"	C	MO	SPECIAL	4'	8'	(TYPE E)	
		LIN. FT.					EACH					EACH						
511+00	CONSTRUCT DROP INLET ON RT													1				SPECIAL DETAILS
511+50	CONSTRUCT DROP INLET ON RT													1				SPECIAL DETAILS
512+00	CONSTRUCT DROP INLET ON RT													1				SPECIAL DETAILS
512+50	CONSTRUCT DROP INLET ON RT													1				SPECIAL DETAILS
513+50	CONSTRUCT DROP INLET ON RT													1				SPECIAL DETAILS
514+00	CONSTRUCT DROP INLET ON RT													1				SPECIAL DETAILS
514+50	CONSTRUCT DROP INLET ON RT													1				SPECIAL DETAILS
515+00	CONSTRUCT DROP INLET ON RT													1				SPECIAL DETAILS
515+50	CONSTRUCT DROP INLET ON RT													1				SPECIAL DETAILS
516+35	CONSTRUCT DROP INLET ON LT W/ PIPE OUTLET	95											1					FPC-9E, FPC-9M, PCC-1, PCM-1, PCP-1, PCP-2, PCP-3
516+35	CONSTRUCT DROP INLET ON RT													1				SPECIAL DETAILS
517+30	CONSTRUCT DROP INLET ON LT W/ PIPE OUTLET	95											1					FPC-9E, FPC-9M, PCC-1, PCM-1, PCP-1, PCP-2, PCP-3
517+50	CONSTRUCT DROP INLET ON RT													1				SPECIAL DETAILS
518+25	CONSTRUCT DROP INLET ON LT W/ PIPE OUTLET	90											1					FPC-9E, FPC-9M, PCC-1, PCM-1, PCP-1, PCP-2, PCP-3
518+75	CONSTRUCT DROP INLET ON RT													1				SPECIAL DETAILS
519+15	CONSTRUCT DROP INLET ON LT W/ PIPE OUTLET	90											1					FPC-9E, FPC-9M, PCC-1, PCM-1, PCP-1, PCP-2, PCP-3
520+00	CONSTRUCT DROP INLET ON RT													1				SPECIAL DETAILS
520+05	CONSTRUCT DROP INLET ON LT W/ PIPE OUTLET W/ F.E.S.	20					1						1					FPC-9E, FPC-9M, PCC-1, PCM-1, PCP-1, PCP-2, PCP-3
521+00	CONSTRUCT DROP INLET ON RT													1				SPECIAL DETAILS
524+00	CONSTRUCT DROP INLET ON RT													1				SPECIAL DETAILS
524+70	CONSTRUCT DROP INLET ON LT W/ PIPE OUTLET W/ F.E.S.			45					1				1					FPC-9E, FPC-9M, PCC-1, PCM-1, PCP-1, PCP-2, PCP-3
525+00	CONSTRUCT DROP INLET ON RT													1	1			SPECIAL DETAILS
525+66	CONSTRUCT DROP INLET ON RT													1	1			SPECIAL DETAILS
525+75	CONSTRUCT JUNCTION BOX ON LT W/ PIPE OUTLET			109													1	FPC-9, FPC-9M, PCC-1, PCM-1, PCP-1, PCP-2, PCP-3
527+10	CONSTRUCT DROP INLET ON RT W/ PIPE OUTLET	113											1		1			FPC-9E, FPC-9M, PCC-1, PCM-1, PCP-1, PCP-2, PCP-3
527+60	CONSTRUCT DROP INLET ON LT W/ PIPE OUTLET	43											1					FPC-9E, FPC-9M, PCC-1, PCM-1, PCP-1, PCP-2, PCP-3
527+90	CONSTRUCT DROP INLET ON RT W/ PIPE OUTLET	90											1					FPC-9E, FPC-9M, PCC-1, PCM-1, PCP-1, PCP-2, PCP-3
528+21	CONSTRUCT DROP INLET ON LT W/ PIPE OUTLET	63											1					FPC-9E, FPC-9M, PCC-1, PCM-1, PCP-1, PCP-2, PCP-3
528+65	CONSTRUCT DROP INLET ON RT W/ PIPE OUTLET	78											1					FPC-9E, FPC-9M, PCC-1, PCM-1, PCP-1, PCP-2, PCP-3
529+10	CONSTRUCT DROP INLET ON LT W/ PIPE INLET AND W/ PIPE OUTLET	87											1					FPC-9E, FPC-9M, PCC-1, PCM-1, PCP-1, PCP-2, PCP-3
529+65	CONSTRUCT DROP INLET ON RT W/ PIPE OUTLET	101											1					FPC-9E, FPC-9M, PCC-1, PCM-1, PCP-1, PCP-2, PCP-3
530+20	CONSTRUCT DROP INLET ON LT W/ PIPE INTLET W/ F.E.S. AND W/ PIPE OUTLET	181					1						1					FPC-9E, FPC-9M, PCC-1, PCM-1, PCP-1, PCP-2, PCP-3
530+55	CONSTRUCT DROP INLET ON RT W/ PIPE INTLET W/ F.E.S. AND W/ PIPE OUTLET	113					1											
600+79	CONSTRUCT JUNCTION BOX ON RT W/ PIPE OUTLET W/ F.E.S.	30					1										1	FPC-9, FPC-9M, PCC-1, PCM-1, PCP-1, PCP-2, PCP-3
602+78	CONSTRUCT DROP INLET ON RT W/ PIPE OUTLET	88											1			1		FPC-9E, FPC-9M, PCC-1, PCM-1, PCP-1, PCP-2, PCP-3
603+26	CONSTRUCT DROP INLET ON RT W/ PIPE OUTLET	46											1		1			FPC-9E, FPC-9M, PCC-1, PCM-1, PCP-1, PCP-2, PCP-3
603+74	CONSTRUCT DROP INLET ON RT W/ PIPE OUTLET	46											1			1		FPC-9E, FPC-9M, PCC-1, PCM-1, PCP-1, PCP-2, PCP-3
SUBTOTALS (BOX 1 OF 2):		**3541**	**684**		**112**	**298**	**12**	**2**		**1**	**2**	**1**	**47**	**21**	**17**	**5**	**7**	
SUBTOTALS (BOX 2 OF 2):		**1469**		**154**			**4**		**1**				**17**	**17**	**4**	**2**	**2**	
TOTALS:		**5010**	**684**	**154**	**112**	**298**	**16**	**2**	**1**	**1**	**2**	**1**	**64**	**38**	**21**	**7**	**9**	

STATE OF ARKANSAS LICENSED PROFESSIONAL ENGINEER No. 11425 TRINITY D. SMITH

Trinity Smith

10-30-2023

JOINT SUPPORTS

STATION	LOCATION	AVD. WIDTH	CLASS S CONCRETE - ROADWAY
		FEET	CU.YD.
206+42.86	HWY. 10 SITE 1 - BRIDGE NO. 07641	56.00	6.22
206+57.86	HWY. 10 SITE 1 - BRIDGE NO. 07641	56.00	6.22
211+51.14	HWY. 10 SITE 1 - BRIDGE NO. 07641	56.00	6.22
211+66.14	HWY. 10 SITE 1 - BRIDGE NO. 07641	56.00	6.22
218+98.59	HWY. 10 SITE 1 - BRIDGE NO. 07642	56.00	6.22
219+13.59	HWY. 10 SITE 1 - BRIDGE NO. 07642	56.00	6.22
224+36.19	HWY. 10 SITE 1 - BRIDGE NO. 07642	56.00	6.22
224+51.19	HWY. 10 SITE 2 - BRIDGE NO. 07642	56.00	6.22
235+88.86	HWY. 10 SITE 3 - BRIDGE NO. 07643	56.00	6.22
236+03.86	HWY. 10 SITE 3 - BRIDGE NO. 07643	56.00	6.22
239+79.14	HWY. 10 SITE 3 - BRIDGE NO. 07643	56.00	6.22
239+94.14	HWY. 10 SITE 3 - BRIDGE NO. 07643	56.00	6.22
503+38.86	HWY. 10 SITE 4 - BRIDGE NO. 07644	36.00	4.00
503+53.86	HWY. 10 SITE 4 - BRIDGE NO. 07644	36.00	4.00
508+01.14	HWY. 10 SITE 4 - BRIDGE NO. 07644	36.00	4.00
508+16.14	HWY. 10 SITE 4 - BRIDGE NO. 07644	36.00	4.00
520+48.86	HWY. 10 SITE 5 - BRIDGE NO. 07645	36.00	4.00
520+63.86	HWY. 10 SITE 5 - BRIDGE NO. 07645	36.00	4.00
524+26.14	HWY. 10 SITE 5 - BRIDGE NO. 07645	36.00	4.00
524+41.14	HWY. 10 SITE 5 - BRIDGE NO. 07645	36.00	4.00
TOTALS:			106.64

COLD MILLING ASPHALT PAVEMENT

STATION	STATION	LOCATION	AVG. WIDTH	COLD MILLING ASPHALT PAVEMENT
			FEET	SQ. YD.
0.000*	0.010*	HWY. 10 SECTION 1 - MAIN LANES	36.00	211.20
0.043*	0.109*	HWY. 10 SECTION 1 - MAIN LANES	36.00	1393.92
0.109*	0.180*	HWY. 10 SECTION 1 - MAIN LANES	37.00	1541.17
0.180*	0.236*	HWY. 10 SECTION 1 - MAIN LANES	40.00	1314.13
0.236*	0.305*	HWY. 10 SECTION 1 - MAIN LANES	48.00	1943.04
0.305*	0.360*	HWY. 10 SECTION 1 - MAIN LANES	36.00	1161.60
10.800*	11.053*	HWY. 10 SECTION 0 - MAIN LANES	32.00	4749.65
11.053*	11.069*	HWY. 10 SECTION 0 - MAIN LANES	26.00	244.05
11.08[illegible]*	11.130*	HWY. 10 SECTION 0 - MAIN LANES	26.00	747.41
185+00.00	186+00.00	MAIN LANES	23.00	255.56
249+00.00	250+00.00	MAIN LANES	22.00	244.44
499+25.00	500+25.00	MAIN LANES	36.00	400.00
532+25.00	533+25.00	MAIN LANES	32.65	362.78
400+00.00	401+00.00	MAIN LANES	22.00	244.44
408+63.00	409+63.00	MAIN LANES	22.75	252.78
TOTAL:				15066.17

NOTE: COORDINATE COLD MILLING STOCKPILE LOCATIONS WITH DISTRICT ENGINEER.
STOCKPILE LOCATIONS SHALL BE NO FURTHER THAN FIVE MILES FROM EACH SITE.

* DENOTES LOG MILE

PORTLAND CEMENT CONCRETE BASE AND SURFACING

STATION	STATION	LOCATION	LENGTH	CEMENT STABILIZED CRUSHED STONE BASE COURSE (6" COMP'D. DEPTH)				GEOTEXTILE FABRIC (TYPE SPECIAL)		PORTLAND CEMENT CONCRETE PAVEMENT		PORTLAND CEMENT CONCRETE BASE	
				AVG. WID.	PROCESSING	CEMENT	AGGREGATE	AVG. WID.	SQ. YD.	AVG. WID.	9" U.T.	AVG. WID.	5" U.T.
			FEET	FEET	SQ. YD.	TON	TON	FEET		FEET	SQ. YD.	FEET	SQ. YD.
197+33.56	206+72.86	HWY. 10 FULL DEPTH	939.30	61.00	6366.37	133.69	2094.54	56.00	5844.53	56.00	5844.53		
211+36.14	219+28.59	HWY. 10 FULL DEPTH	792.45	61.00	5371.05	112.79	1767.03	56.00	4930.80	56.00	4930.80		
224+21.19	236+18.86	HWY. 10 FULL DEPTH	1197.67	61.00	8117.54	170.47	2670.67	56.00	7452.17	56.00	7452.17		
239+64.14	240+60.00	HWY. 10 FULL DEPTH	95.86	61.00	649.72	13.64	213.76	56.00	596.46	56.00	596.46		
500+25.00	501+51.00	E. CENTER ST. NOTCH AND WIDEN	126.00									7.00	98.00
501+51.00	502+33.00	E. CENTER ST. NOTCH AND WIDEN	82.00									13.00	118.44
529+10.34	530+55.00	E. CENTER ST. NOTCH AND WIDEN	144.66									13.00	208.95
600+28.00	606+52.59	MAIN ST. FULL DEPTH	624.59	31.00	2151.37	45.18	707.80	28.00	1943.17	28.00	1943.17		
TOTALS:					22656.05	475.77	7453.85		20767.13		20767.13		425.39

BASIS OF ESTIMATE:
ACHM SURFACE COURSE (1/2").....94.2% MIN. AGGR.....5.8% ASPHALT BINDER
MAXIMUM NUMBER OF GYRATIONS = 115 FOR PG 64-22
CEMENT STABILIZED CRUSHED STONE BASE COURSE = 94.0% AGGR. 6.0% CEMENT
TACK COAT QUANTITIES WERE CALCULATED USING THE EMULISIFED ASPHALT RATES. REFER TO SS-400-1 FOR THE RESIDUAL ASPHALT APPLICATION RATES.

DATE REVISED	DATE REVISED	FED.RD. DIST.NO.	STATE	JOB NO.	SHEET NO.	TOTAL SHEETS
10-24-2023		6	ARK.	040861	84	291
10-30-2023		QUANTITIES				

STATE OF ARKANSAS LICENSED PROFESSIONAL ENGINEER No. 11425 TRINITY D. SMITH

Trinity D. Smith

10-30-2023

ACHM BASE AND SURFACING

STATION	STATION	LOCATION	LENGTH	CEMENT TREATED BASE COURSE				TACK COAT							ACHM BASE COURSE (1 1/2")				ACHM BINDER COURSE (1")				ACHM SURFACE COURSE (1/2")								
				TOTAL WIDTH	PROCESS (8" U.T.)	CEMENT	SOIL AGGR. (8" COMP. DEPTH)	(0.05 GAL. PER SQ. YD.)			(0.17 GAL. PER SQ. YD.)			TOTAL GALLONS	AVG. WID.	SQ.YD.	POUND / SQ.YD.	PG 64-22	AVG. WID.	SQ.YD.	POUND / SQ.YD.	PG 64-22	AVG. WID.	SQ.YD.	POUND / SQ.YD.	FG 64-22	AVG. WID.	SQ.YD.	POUND / SQ.YD.	PG 64-22	TOTAL PG 64-22
			FEET	FEET	SQ. YD.	TON	SQ. YD.	TOTAL WID. FEET	SQ.YD.	GALLON	TOTAL WID. FEET	SQ.YD.	GALLON		FEET			TON	FEET			TON	FEET			TON	FEET			TON	TON
MAIN LANES																															
0.000*	0.010*	HWY. 10 SECTION 1 - MAIN LANES	32.80					36.00	211.20	10.56	36.00	211.20	35.90	46.46									36.00	211.20	220.00	23.23					23.23
0.043*	0.109*	HWY. 10 SECTION 1 - MAIN LANES	348.48					36.00	1393.92	69.70	36.00	1393.92	236.97	306.67									36.00	1393.92	220.00	153.33					153.33
0.109*	0.180*	HWY. 10 SECTION 1 - MAIN LANES	374.88					37.00	1541.17	77.06	37.00	1541.17	262.00	339.06									37.00	1541.17	220.00	169.53					169.53
0.180*	0.236*	HWY. 10 SECTION 1 - MAIN LANES	295.68					40.00	1314.13	65.71	40.00	1314.13	223.40	289.11									40.00	1314.13	220.00	144.55					144.55
0.236*	0.305*	HWY. 10 SECTION 1 - MAIN LANES	364.32					48.00	1943.04	97.15	48.00	1943.04	330.32	427.47									48.00	1943.04	220.00	213.73					213.73
0.305*	0.360*	HWY. 10 SECTION 1 - MAIN LANES	290.40					36.00	1161.60	58.08	36.00	1161.60	197.47	255.55									36.00	1161.60	220.00	127.78					127.78
10.800*	11.053*	HWY. 10 SECTION 0 - MAIN LANES	1335.84					32.00	4749.65	237.48	32.00	4749.65	807.44	1044.92									32.00	4749.65	220.00	522.46					522.46
11.053*	11.069*	HWY. 10 SECTION 0 - MAIN LANES	34.48					26.00	244.05	12.20	26.00	244.05	41.49	53.69									26.00	244.05	220.00	26.85					26.85
11.081*	11.130*	HWY. 10 SECTION 0 - MAIN LANES	258.72					26.00	747.41	37.37	26.00	747.41	127.06	164.43									26.00	747.41	220.00	82.22					82.22
185+00.00	186+00.00	HWY. 10 TRANSITION	100.00								23.00	255.56	43.45	43.45									23.00	255.56	220.00	28.11					28.11
186+00.00	193+70.00	HWY. 10 NOTCH AND WIDEN	770.00					163.00	13945.56	697.28	22.00	1882.22	319.98	1017.26	39.00	3336.67	550.00	917.58	39.00	3336.67	330.00	550.55	56.00	4791.11	220.00	527.02	56.00	4791.11	220.00	527.02	1054.04
193+70.00	197+33.56	HWY. 10 FULL DEPTH	363.56					168.00	6786.45	339.32				339.32	61.00	2464.13	550.00	677.64	56.00	2262.15	330.00	373.25	56.00	2262.15	220.00	248.84	56.00	2262.15	220.00	248.84	497.68
240+60.00	244+70.00	HWY. 10 FULL DEPTH	410.00					168.00	7653.33	382.67				382.67	61.00	2778.89	550.00	764.19	56.00	2551.11	330.00	420.93	56.00	2551.11	220.00	280.62	56.00	2551.11	220.00	280.62	561.24
244+70.00	249+00.00	HWY. 10 NOTCH AND WIDEN	430.00					163.00	7787.78	389.39	22.00	1051.11	178.69	568.08	39.00	1863.33	550.00	512.42	39.00	1863.33	330.00	307.45	56.00	2675.56	220.00	294.31	56.00	2675.56	220.00	294.31	588.62
249+00.00	250+00.00	HWY. 10 TRANSITION	100.00								23.00	255.56	43.45	43.45									24.00	266.67	220.00	29.33					29.33
400+00.00	401+00.00	S. COKER ST. TRANSITION	100.00					22.75	252.78	12.64				12.64									22.75	252.78	220.00	27.81					27.81
401+00.00	404+70.99	S. COKER ST. NOTCH AND WIDEN	370.99					80.00	3297.69	164.88	23.00	948.09	161.18	326.06	18.00	741.98	550.00	204.04	13.00	535.87	330.00	88.42	13.00	535.87	220.00	58.95	36.00	1483.96	220.00	163.24	222.19
405+29.05	408+63.00	S. COKER ST. NOTCH AND WIDEN	333.95					80.00	2968.44	148.42	23.00	853.43	145.08	293.50	18.00	667.90	550.00	183.67	13.00	482.37	330.00	79.59	13.00	482.37	220.00	53.06	36.00	1335.80	220.00	146.94	200.00
408+63.00	409+63.00	S. COKER ST. TRANSITION	100.00					22.75	252.78	12.64				12.64									22.75	252.78	220.00	27.81					27.81
499+25.00	500+25.00	E. CENTER ST. TRANSITION	100.00					86.50	961.11	48.06	30.00	333.33	56.67	104.73									36.00	400.00	220.00	44.00					44.00
500+25.00	501+51.00	E. CENTER ST. NOTCH AND WIDEN	126.00								35.00	490.00	83.30	83.30													36.00	504.00	220.00	55.44	55.44
501+51.00	502+33.00	E. CENTER ST. NOTCH AND WIDEN	32.00								32.00	291.56	49.57	49.57													36.00	328.00	220.00	36.08	36.08
502+33.00	504+03.86	E. CENTER ST. FULL DEPTH	170.86					113.00	2145.24	107.26				107.26	41.00	778.36	550.00	214.05	36.00	683.44	330.00	112.77	36.00	683.44	220.00	75.18	36.00	683.44	220.00	75.18	150.36
507+51.14	508+09.03	E. CENTER ST. FULL DEPTH	37.89					113.00	726.84	36.34				36.34	41.00	263.72	550.00	72.52	36.00	231.56	330.00	38.21	36.00	231.56	220.00	25.47	36.00	231.56	220.00	25.47	50.94
508+09.03	517+25.49	E. CENTER ST. FULL DEPTH	816.46					113.00	11506.66	575.33				575.33	41.00	4174.98	550.00	1148.12	36.00	3665.84	330.00	604.86	36.00	3665.84	220.00	403.24	36.00	3665.84	220.00	403.24	806.48
517+25.49	519+30.00	E. CENTER ST. FULL DEPTH	204.51					113.00	2567.74	128.39				128.39	41.00	931.66	550.00	256.21	36.00	818.04	330.00	134.98	36.00	818.04	220.00	89.98	36.00	818.04	220.00	89.98	179.96
519+30.00	521+13.86	E. CENTER ST. FULL DEPTH	183.86					113.00	2308.46	115.42				115.42	41.00	837.58	550.00	230.33	36.00	735.44	330.00	121.35	36.00	735.44	220.00	80.90	36.00	735.44	220.00	80.90	161.80
523+76.14	525+60.00	E. CENTER ST. FULL DEPTH	183.86	41.00	837.58	28.34	837.58	113.00	2308.46	115.42				115.42	41.00	837.58	550.00	230.33	36.00	735.44	330.00	121.35	36.00	735.44	220.00	80.90	36.00	735.44	220.00	80.90	161.80
525+60.00	526+35.25	E. CENTER ST. FULL DEPTH	75.25	17.00	142.14	4.81	142.14	113.00	944.81	47.24				47.24	41.00	342.81	550.00	94.27	36.00	301.00	330.00	49.67	36.00	301.00	220.00	33.11	36.00	301.00	220.00	33.11	66.22
527+30.34	529+10.34	E. CENTER ST. NOTCH AND WIDEN	180.00					41.00	820.00	41.00	24.00	480.00	81.60	122.60	17.00	340.00	550.00	93.50	12.00	240.00	330.00	39.60	12.00	240.00	220.00	26.40	36.00	720.00	220.00	79.20	105.60
529+10.34	530+55.00	E. CENTER ST. NOTCH AND WIDEN	144.66								32.00	514.35	87.44	87.44													36.00	578.64	220.00	63.65	63.65
530+55.00	532+25.00	E. CENTER ST. NOTCH AND WIDEN	170.00					113.00	2134.44	106.72				106.72	41.00	774.44	550.00	212.97	36.00	680.00	330.00	112.20	36.00	680.00	220.00	74.80	36.00	680.00	220.00	74.80	149.60
532+25.00	533+25.00	E. CENTER ST. TRANSITION	100.00					32.60	362.22	18.11				18.11									32.60	362.22	220.00	39.84					39.84
601+00.00	606+00.00	MAIN ST. FULL DEPTH	500.00	31.00	1722.22	58.28	1722.22																								
ADDITIONAL FOR LEVELING																															
187+15.00	192+00.00	HWY. 10	485.00					46.00	2478.89	123.94	23.00	1239.44	210.70	334.64									23.00	1239.44	VAR.	392.04					392.04
244+70.00	248+87.00	HWY. 10	417.00					22.00	1019.33	50.97	22.00	1019.33	173.29	224.26									22.00	1019.33	VAR.	229.68					229.68
500+60.00	501+80.00	E. CENTER ST.	120.00								33.00	440.00	74.80	74.80									33.00	440.00	VAR.	97.02					97.02
528+21.00	532+25.00	E. CENTER ST.	404.00								30.25	1357.89	230.84	230.84									30.25	1357.89	VAR.	75.24					75.24
401+88.00	402+40.00	S. COKER ST.	52.00					23.00	132.89	6.64	23.00	132.89	22.59	29.23									23.00	132.89	VAR.	7.92					7.92
405+29.05	407+40.00	S. COKER ST.	210.95					69.75	1634.86	81.74	23.25	544.95	92.64	174.38									23.25	544.95	VAR.	172.26					172.26
ADDITIONAL FOR METHOD OF RAISING GRADE																															
192+00.00	193+70.00	HWY. 10	170.00					23.00	434.44	21.72	23.00	434.44	73.85	95.57	23.00	434.44	VAR.	180.18													
501+80.00	502+00.00	E. CENTER ST.	20.00					66.00	146.67	7.33	33.00	73.33	12.47	19.80	33.00	73.33	VAR.	221.76													
402+40.00	404+70.99	S. COKER ST.	230.99					48.00	1231.95	61.60	24.00	615.97	104.71	166.31	24.00	615.97	VAR.	1217.70													
TOTALS:					**2701.94**	**91.43**	**2701.94**		**90115.99**	**4505.78**		**26519.62**	**4508.35**	**9014.13**		**22257.77**		**7437.48**		**19122.26**		**3155.18**		**41219.61**		**4987.52**		**25081.09**		**2758.92**	**7746.44**

BASIS OF ESTIMATE:
ACHM SURFACE COURSE (1/2").....94.2% MIN. AGGR.....5.8% ASPHALT BINDER
ACHM BINDER COURSE (1").....95.4% MIN. AGGR.....4.6% ASPHALT BINDER
ACHM BASE COURSE (1 1/2").....95.7% MIN. AGGR.....4.3% ASPHALT BINDER
MAXIMUM NUMBER OF GYRATIONS = 115 FOR PG 64-22
TACK COAT QUANTITIES WERE CALCULATED USING THE EMULSIFIED ASPHALT RATES. REFER TO SS-400-1 FOR THE RESIDUAL ASPHALT APPLICATION RATES.

* DENOTES LOG MILE

rb43088 10/30/2023
RQ40861.DGN

DATE REVISED	DATE REVISED	FED. RD. DIST. NO.	STATE	JOB NO.	SHEET NO.	TOTAL SHEETS
		6	ARK.	040861	85	291
		SEE TABLE - QUANTITIES - 66871				

SCHEDULE OF BRIDGE QUANTITIES - JOB 040861

BRIDGE NO.	NAME PLATE TITLE	UNIT OF STRUCTURE	ITEM NO.	205	801	SP, SS, & 802	SP, SS, & 802	SP & 803	SS & 804	SS & 804	SP, SS, & 805	SP, SS, & 805	SP, SS, & 805	SS & 805	SS & 805
			ITEM	REMOVAL OF EXISTING BRIDGE STRUCTURE (SITE NO. _)	UNCLASSIFIED EXCAVATION FOR STRUCTURES - BRIDGE	CLASS S CONCRETE - BRIDGE	CLASS S(AE) CONCRETE - BRIDGE	CLASS 2 PROTECTIVE SURFACE TREATMENT	REINFORCING STEEL - BRIDGE (GRADE 60)	EPOXY COATED REINFORCING STEEL (GRADE 60)	① STEEL PILING (HP 14X73)	① STEEL PILING (HP 16X121)	① STEEL PILING (HP 18X135)	PILE ENCASEMENT	② PREBORING
			UNIT	LUMP SUM	CU. YD.	CU. YD.	CU. YD.	SQ. YD.	LB.	LB.	LIN. FT.	LIN. FT.	LIN. FT.	LIN. FT.	LIN. FT.
07641	HIGHWAY 10 OVER HEARTSILL CREEK	BENT 1				71.30		20.0	8,610	500	292				189
		BENT 2				27.50			4,880			252		45	225
		BENT 3				27.50			4,880			261		90	189
		BENT 4				27.50			4,880			234		72	171
		BENT 5				27.50			4,880	500		225		54	180
		BENT 6				71.20		20.0	8,610		259				171
		391'-0" CONT. W-BEAM UNIT					931.70	3,458.0		240,550					
TOTALS FOR BRIDGE NO. 07641					-	252.50	931.70	3,498.0	36,740	241,550	551	972	-	261	1,125
07642	HIGHWAY 10 OVER HEARTSILL CREEK	BENT 1				86.10		24.8	10,460	650	426				261
		BENT 2				29.50			5,550				306	99	216
		BENT 3				28.40			5,435				306	108	198
		BENT 4				27.50			5,350				333	108	225
		BENT 5				26.70			5,275				333	108	225
		BENT 6				72.10		19.8	8,740	500	413				252
		420'-0" CONT. PLATE GIRDER UNIT					1,007.00	3,718.4		258,790					
TOTALS FOR BRIDGE NO. 07642					-	270.30	1,007.00	3,763.0	40,810	259,940	839	-	1,278	423	1,377
07643	HIGHWAY 10 OVER VACHE GRASSE CREEK	BENT 1				77.70		24.0	8,510	500	314				153
		BENT 2				26.20			4,885				306	99	207
		BENT 3				26.20			4,885				216	72	153
		BENT 4				76.80		24.0	8,490	500	261				144
		273'-0" CONT. PLATE GIRDER UNIT					651.20	2,416.0		172,270					
TOTALS FOR BRIDGE NO. 07643					-	206.90	651.20	2,464.0	26,770	173,270	575	-	522	171	657
07644	HIGHWAY 10 OVER HEARTSILL CREEK	BENT 1			190	62.30		13.1	7,730	360	294				256
		BENT 2				23.30			4,280			232		72	176
		BENT 3				23.30			4,280			280		104	192
		BENT 4				23.30			4,280			280		128	160
		BENT 5				23.30			4,280			280		88	200
		BENT 6			130	62.80		13.1	7,730	360	354				272
		345'-0" CONT. W-BEAM UNIT					687.60	2,649.8		147,470					
		SITE NO. 4 (BR. NO. A0424)		1											
TOTALS FOR BRIDGE NO. 07644					320	218.30	687.60	2,676.0	32,580	148,190	648	1,072	-	392	1,256
07645	HIGHWAY 10 OVER VACHE GRASSE CREEK	BENT 1				64.90		13.1	7,750	360	324				200
		BENT 2				23.50			4,480				264	88	184
		BENT 3				23.50			4,480				208	64	144
		BENT 4				60.40		13.1	7,750	360	216				136
		260'-0" CONT. PLATE GIRDER UNIT					519.00	2,000.8		114,950					
		SITE NO. 5 (BR. NO. A0425)		1											
TOTALS FOR BRIDGE NO. 07645					-	172.30	519.00	2,027.0	24,460	115,670	540	-	472	152	664
TOTALS FOR JOB NO. 040861					320	1,120.30	3,796.50	14,428.0	161,360	938,620	3,153	2,044	2,272	1,399	5,079

① All steel piling shall be Grade 50 and are required to have QPL-approved driving points, which will not be paid for directly but will be considered subsidiary to the item "STEEL PILING (HP_x_)". All piles shall conform to Dwg. No. 66944.

② Quantity for preboring shown is for estimating and bidding purposes only. Actual quantity will be determined in the field.

TABLE OF APPROACH SLAB QUANTITIES

(FOR INFORMATION ONLY)

BRIDGE NO.	ITEM	REINFORCING STEEL	CONCRETE
	UNIT	LB.	CU. YDS.
07641	Begin Bridge	13,590	111.70
	End Bridge	13,590	111.70
07642	Begin Bridge	14,590	117.80
	End Bridge	13,750	112.80
07643	Begin Bridge	13,590	111.70
	End Bridge	13,590	111.70
07644	Begin Bridge	8,770	71.90
	End Bridge	8,770	71.90
07645	Begin Bridge	8,770	71.90
	End Bridge	8,770	71.90

BRIDGE NUMBERS

07641
07642
07643
07644
07645

JIM POOL
DESIGN SECTION SUPERVISOR

STATE OF ARKANSAS
LICENSED PROFESSIONAL ENGINEER
No. 9235
9/22/23
CHARLES R. ELLIS

BRIDGE ENGINEER

SHEET 1 OF 2
SCHEDULE OF BRIDGE QUANTITIES
HWY. 10 - HWY. 96 (GREENWOOD BYPASS) (S)

ROUTE 10 SEC. 0 & 1

ARKANSAS STATE HIGHWAY COMMISSION

LITTLE ROCK, ARK.

DRAWN BY: JYP DATE: 8/31/2023 FILENAME: b040861_q1.dgn
CHECKED BY: CTM DATE: 9/7/2023 SCALE: No Scale
DESIGNED BY: - DATE: -

BRIDGE NO. SEE TABLE DRAWING NO. 66871

PRINT DATE: 9/22/2023

DATE REVISED	DATE REVISED	FED. RD. DIST. NO.	STATE	JOB NO.	SHEET NO.	TOTAL SHEETS
		6	ARK.	040861	86	291
		SEE TABLE - QUANTITIES - 66872				

SCHEDULE OF BRIDGE QUANTITIES - JOB 040861

BRIDGE NO.	NAME PLATE TITLE	UNIT OF STRUCTURE	ITEM NO.	SS & 806	SS & 806	SS & 806	SS & 806	SP, SS, & 807	SP, SS, & 807	SS & 807	SS & 808	SS & 809	812	SS & 816	SS & 816	SS & 816	SP JOB 040861	SP JOB 040861
			ITEM	METAL BRIDGE RAILING (TYPE H2)	METAL BRIDGE RAILING (TYPE H3)	METAL BRIDGE RAILING (TYPE H4)	TRANSITIONAL APPROACH RAILING	STRUCTURAL STEEL IN BEAM SPANS (A709, GR. 50W)	STRUCTURAL STEEL IN PLATE GIRDER SPANS (A709, GR. 50W)	PAINTING STRUCTURAL STEEL	ELASTOMERIC BEARINGS	SILICONE JOINT SEALANT	BRIDGE NAME PLATE (TYPE D)	FILTER BLANKET	DUMPED RIPRAP	FOUNDATION PROTECTION RIPRAP	ARCHITECTURAL FINISH	TEXTURED COATING FINISH
			UNIT	LIN. FT.	LIN. FT.	LIN. FT.	EACH	LB.	LB.	TON	CU. IN.	LIN. FT.	EACH	SQ. YD.	CU. YD.	TON	SQ. FT.	SQ. YD.
07641	HIGHWAY 10 OVER HEARTSILL CREEK	BENT 1					2	1,660			6,064.0		1	367		263	52	19
		BENT 2									4,563.0							
		BENT 3									3,654.0							
		BENT 4									3,654.0							
		BENT 5									4,563.0							
		BENT 6					2	1,660			6,064.0			231		192	52	19
		391'-0" CONT. W-BEAM UNIT		770				887,310		61.0		155					1,563	582
TOTALS FOR BRIDGE NO. 07641				770	-	-	4	890,630	-	61.0	28,562.0	155	1	598	-	455	1,667	620
07642	HIGHWAY 10 OVER HEARTSILL CREEK	BENT 1					2		1,890		5,049.0		1	536	292		102	20
		BENT 2									6,048.0							
		BENT 3									5,616.0							
		BENT 4									5,616.0							
		BENT 5									6,048.0							
		BENT 6					2		1,593		5,049.0			429	236		78	19
		420'-0" CONT. PLATE GIRDER UNIT		829					822,817	48.0		175					1,628	619
TOTALS FOR BRIDGE NO. 07642				829	-	-	4	-	826,300	48.0	33,426.0	175	1	965	528	-	1,808	658
07643	HIGHWAY 10 OVER VACHE GRASSE CREEK	BENT 1					2		1,535		3,915.0		1	447	248		52	20
		BENT 2									5,408.0							
		BENT 3									5,408.0							
		BENT 4					2		1,535		3,915.0			432	238		52	18
		273'-0" CONT. PLATE GIRDER UNIT		534					554,770	43.0		155					1,092	403
TOTALS FOR BRIDGE NO. 07643				534	-	-	4	-	557,840	43.0	18,646.0	155	1	879	486	-	1,196	441
07644	HIGHWAY 10 OVER HEARTSILL CREEK	BENT 1				11	2	1,275			4,284.0		1	166	96		26	19
		BENT 2									3,510.0							
		BENT 3									3,510.0							
		BENT 4									3,510.0							
		BENT 5									3,510.0							
		BENT 6				11	2	1,275			4,284.0			516	288		26	18
		345'-0" CONT. W-BEAM UNIT		338	336	349		568,970		43.0		132					1,593	587
		SITE NO. 4 (BR. NO. A0424)																
TOTALS FOR BRIDGE NO. 07644				338	336	371	4	571,520	-	43.0	22,608.0	132	1	682	384	-	1,645	624
07645	HIGHWAY 10 OVER VACHE GRASSE CREEK	BENT 1				11.0	2		1,313		4,640.0		1	228	127		26	18
		BENT 2									5,616.0							
		BENT 3									5,616.0							
		BENT 4				11.0			1,313		4,640.0			93	56		26	18
		260'-0" CONT. PLATE GIRDER UNIT		246	253	269	2		482,204	39.0		132					1,199	445
		SITE NO. 5 (BR. NO. A0425)																
TOTALS FOR BRIDGE NO. 07645				246	253	291	4	-	484,830	39.0	20,512.0	132	1	321	183	-	1,251	481
TOTALS FOR JOB NO. 040861				2,717	589	662	20	1,462,150	1,868,970	234.0	123,754.0	749	5	3,445	1,581	455	7,567	2,824

BRIDGE NUMBERS

07641
07642
07643
07644
07645

JIM POOL
DESIGN SECTION SUPERVISOR

STATE OF ARKANSAS
LICENSED PROFESSIONAL ENGINEER
No. 9235
9/22/23
CHARLES R. ELLIS

BRIDGE ENGINEER

SHEET 2 OF 2
SCHEDULE OF BRIDGE QUANTITIES
HWY. 10 - HWY. 96 (GREENWOOD BYPASS) (S)

ROUTE 10 SEC. 0 & 1
ARKANSAS STATE HIGHWAY COMMISSION
LITTLE ROCK, ARK.

DRAWN BY: JYP DATE: 8/31/2023 FILENAME: b040861_q1.dgn
CHECKED BY: CTM DATE: 9/7/2023 SCALE: No Scale
DESIGNED BY: - DATE: -
BRIDGE NO. SEE TABLE DRAWING NO. 66872

PRINT DATE: 9/22/2023

DATE REVISED	DATE REVISED	FED.RD. DIST.NO.	STATE	JOB NO.	SHEET NO.	TOTAL SHEETS
10-24-2023		6	ARK.	040861	87	291
10-26-2023						
10-30-2023		SUMMARY OF QUANTITIES				

STATE OF ARKANSAS
LICENSED
PROFESSIONAL ENGINEER
No. 11425
TRINITY D. SMITH

Trinity D. Smith
10-30-2023

SUMMARY OF QUANTITIES (BOX 1 OF 2)

	ITEM NUMBER	ITEM		QUANTITY	UNIT
	201	CLEARING		110	STATION
	201	GRUBBING		110	STATION
	202	REMOVAL AND DISPOSAL OF CURB		267	LIN. FT.
	202	REMOVAL AND DISPOSAL OF FENCE		3213	LIN. FT.
	202	REMOVAL AND DISPOSAL OF GATES		2	EACH
	202	REMOVAL AND DISPOSAL OF CONCRETE ISLANDS		75	SQ. YD.
	202	REMOVAL AND DISPOSAL OF CONCRETE DRIVEWAYS		392	SQ. YD.
	202	REMOVAL AND DISPOSAL OF WALKS		31	SQ. YD.
	202	REMOVAL AND DISPOSAL OF SIGN FOUNDATIONS		3	EACH
	202	REMOVAL AND DISPOSAL OF JUNCTION BOXES		2	EACH
	202	REMOVAL AND DISPOSAL OF PIPE CULVERTS		1	EACH
	202	REMOVAL AND DISPOSAL OF BOX CULVERTS		1	EACH
	202	REMOVAL AND DISPOSAL OF HEADWALLS		4	EACH
	202	REMOVAL AND DISPOSAL OF GUARDRAIL		1073	LIN. FT.
	202	REMOVAL AND DISPOSAL OF BUILDINGS		7	EACH
	202	REMOVAL AND DISPOSAL OF SIGNS		11	EACH
	202	REMOVAL AND DISPOSAL OF PLANTERS		1	EACH
	SP, SS, & 210	UNCLASSIFIED EXCAVATION		110063	CU. YD.
	SP & 210	COMPACTED EMBANKMENT		301277	CU. YD.
	SP & 210	ROCK FILL		64410	TON
	SP & 210	SOIL STABILIZATION		500	TON
	SP, SS, & 303	AGGREGATE BASE COURSE (CLASS 7)		2070	TON
	SS & 307	PROCESSING CEMENT TREATED BASE COURSE (8" UNIFORM THICKNESS)		2702	SQ. YD.
	SS & 307	CEMENT IN TREATED BASE COURSE		91	TON
	SS & 307	SOIL AGGREGATE IN CEMENT TREATED BASE COURSE (8" COMPACTED DEPTH)		2702	SQ. YD.
	SP, SS, & 308	AGGREGATE IN CEMENT STABILIZED CRUSHED STONE BASE COURSE		7454	TON
	SS & 308	CEMENT IN CEMENT STABILIZED CRUSHED STONE BASE COURSE		476	TON
	SS & 308	PROCESSING CEMENT STABLIZED CRUSHED STONE BASE COURSE		22656	SQ. YD.
	SP, SS, & 309	PORTLAND CEMENT CONCRETE BASE (5" UNIFORM THICKNESS)		425	SQ. YD.
	SS & 401	TACK COAT		9074	GAL.
	SP, SS, & 405	MINERAL AGGREGATE IN ACHM BASE COURSE (1 1/2")		7112	TON
	SP, SS, & 405	ASPHALT BINDER (PG 64-22) N ACHM BASE COURSE (1 1/2")		320	TON
	SP, SS, & 406	MINERAL AGGREGATE IN ACHM BINDER COURSE (1")		3010	TON
	SP, SS, & 406	ASPHALT BINDER (PG 64-22) N ACHM BINDER COURSE (1")		145	TON
	SP, SS, & 407	MINERAL AGGREGATE IN ACHM SURFACE COURSE (1/2")		7631	TON
	SP, SS, & 407	ASPHALT BINDER (PG 64-22) N ACHM SURFACE COURSE (1/2")		470	TON
	SP & 412	COLD MILLING ASPHALT PAVEMENT		15066	SQ. YD.
	SP, SS, & 414	ASPHALT CONCRETE PATCHING FOR MAINTENANCE OF TRAFFIC		30	TON
	SP, SS, & 415	ACHM PATCHING OF EXISTING ROADWAY		50	TON
	SP, SS, & 501	PORTLAND CEMENT CONCRETE PAVEMENT (9" UNIFORM THICKNESS)		20767.13	SQ. YD.
	SP, SS, & 504	APPROACH SLABS		965.00	CU. YD.
	SP, SS, & 504	APPROACH GUTTERS		39.20	CU. YD.
	SP, SS, & 505	PORTLAND CEMENT CONCRETE DRIVEWAY		614.45	SQ. YD.
	601	MOBILIZATION		1.00	LUMP SUM
	SP & 602	FURNISHING FIELD OFFICE		1	EACH
	SP, SS, & 603	MAINTENANCE OF TRAFFIC		1.00	LUMP SUM
	SS & 604	SIGNS		912	SQ. FT.
	SP, SS, & 604	CONSTRUCTION PROJECT INFORMATION SIGN UPDATE		6	EACH
	SS & 604	BARRICADES		192	LIN. FT.
	SS & 604	TRAFFIC DRUMS		179	EACH
	604	CONSTRUCTION PAVEMENT MARKINGS		91707	LIN. FT.
	604	CONSTRUCTION PAVEMENT MARKINGS (ARROWS)		6	EACH
	SS & 604	VERTICAL PANELS		179	EACH
	SP, SS, & 605	CONCRETE DITCH PAVING (TYPE B)		781	SQ. YD.
*	SS & 606	18" REINFORCED CONCRETE PIPE CULVERTS (CLASS III)	(ALTERNATE NO. 1)	5010	LIN. FT.
*	SS & 606	18" SMOOTH LINED POLYMER PRECOATED METALLIC COATED CORRUGATED STEEL PIPE	(ALTERNATE NO. 2)	5010	LIN. FT.
*	SS & 606	24" REINFORCED CONCRETE PIPE CULVERTS (CLASS III)	(ALTERNATE NO. 1)	684	LIN. FT.
*	SS & 606	24" SMOOTH LINED POLYMER PRECOATED METALLIC COATED CORRUGATED STEEL PIPE	(ALTERNATE NO. 2)	684	LIN. FT.
*	SS & 606	30" REINFORCED CONCRETE PIPE CULVERTS (CLASS III)	(ALTERNATE NO. 1)	154	LIN. FT.
*	SS & 606	30" SMOOTH LINED POLYMER PRECOATED METALLIC COATED CORRUGATED STEEL PIPE	(ALTERNATE NO. 2)	154	LIN. FT.
*	SS & 606	48" REINFORCED CONCRETE PIPE CULVERTS (CLASS III)	(ALTERNATE NO. 1)	112	LIN. FT.
*	SS & 606	48" SMOOTH LINED POLYMER PRECOATED METALLIC COATED CORRUGATED STEEL PIPE	(ALTERNATE NO. 2)	112	LIN. FT.
*	SS & 606	44" X 27" REINFORCED CONCRETE ARCH PIPE CULVERTS (CLASS III)	(ALTERNATE NO. 1)	298	LIN. FT.
*	SS & 606	42" X 29" SMOOTH LINED POLYMER PRECOATED METALLIC COATED CORRUGATED STEEL ARCH PIPE	(ALTERNATE NO. 2)	298	LIN. FT.
	SP, SS, & 606	18" SIDE DRAIN		242	LIN. FT.
	SS & 606	18" FLARED END SECTIONS FOR REINFORCED CONCRETE PIPE CULVERTS		16	EACH
	SS & 606	24" FLARED END SECTIONS FOR REINFORCED CONCRETE PIPE CULVERTS		2	EACH
	SS & 606	30" FLARED END SECTIONS FOR REINFORCED CONCRETE PIPE CULVERTS		1	EACH
	SS & 606	48" FLARED END SECTIONS FOR REINFORCED CONCRETE PIPE CULVERTS		1	EACH
	SS & 606	44" X 27" FLARED END SECTIONS FOR REINFORCED CONCRETE ARCH PIPE CULVERTS		2	EACH
	SS & 606	SELECTED PIPE BEDDING		470	CU. YD.
	SS & 609	DROP INLETS (TYPE C)		1	EACH
	SS & 609	DROP INLETS (TYPE MO)		64	EACH
	SS & 609	DROP INLETS (TYPE SPECIAL)		38	EACH
	SS & 609	JUNCTION BOXES (TYPE E)		9	EACH
	SS & 609	DROP INLET EXTENSIONS (4')		21	EACH
	SS & 609	DROP INLET EXTENSIONS (8')		7	EACH
	SS & 611	4" PIPE UNDERDRAINS		2500	LIN. FT.
	SS & 611	UNDERDRAIN OUTLET PROTECTORS		10	EACH
	SS & 615	PAVEMENT REPAIR OVER CULVERTS (CONCRETE)		33.9	CU. YD.
	SS & 619	WIRE FENCE (TYPE A)		6804	LIN. FT.
	SS & 619	WIRE FENCE (TYPE C)		99	LIN. FT.
*	SS & 619	16' STEEL GATES	(ALTERNATE NO. 1)	10	EACH
*	SS & 619	16' ALUMINUM GATES	(ALTERNATE NO. 2)	10	EACH
	620	LIME		29	TON
	620	SEEDING		14.70	ACRE
	SS & 620	MULCH COVER		87.11	ACRE
	620	WATER		2986.5	M. GAL.
	621	TEMPORARY SEEDING		72.41	ACRE
	621	SILT FENCE		8436	LIN. FT.
	621	SAND BAG DITCH CHECKS		1342	BAG
	621	DIVERSION DITCH		550	LIN. FT.
	621	SEDIMENT BASIN		2960	CU. YD.
	621	OBLITERATION OF SEDIMENT BASIN		2960	CU. YD.
	621	SEDIMENT REMOVAL AND DISPOSAL		3401	CU. YD.
	621	PIPE FOR SLOPE DRAINS		22	LIN. FT.
	621	ROCK DITCH CHECKS		204	CU. YD.

r043088 10/30/2023
R040861.DGN

SUMMARY OF QUANITITES

DATE REVISED	DATE REVISED	FED.RD. DIST.NO.	STATE	JOB NO.	SHEET NO.	TOTAL SHEETS
10-12-2023	10-26-2023	6	ARK.	040861	88	291
10-16-2023	10-30-2023					
10-24-2023		SUMMARY OF QUANTITIES AND REVISIONS				

STATE OF ARKANSAS LICENSED PROFESSIONAL ENGINEER No. 11425 TRINITY D. SMITH

Trinity D. Smith

10-30-2023

SUMMARY OF QUANTITIES (BOX 2 OF 2)

ITEM NUMBER	ITEM	QUANTITY	UNIT
SS & 621	FILTER SOCK (12")	3048	LIN. FT.
623	SECOND SEEDING APPLICATION	14.70	ACRE
624	SOLID SODDING	786	SQ. YD.
SP & 625	GEOTEXTILE FABRIC (TYPE 9)	24160	SQ. YD.
SP & 625	GEOTEXTILE FABRIC (TYPE SPECIAL)	20767	SQ. YD.
626	EROSION CONTROL MATTING (CLASS 3)	3509	SQ. YD.
SP, SS, & 632	CONCRETE ISLAND	260	SQ. YD.
SP, SS, & 633	CONCRETE WALKS	11609	SQ. YD.
SP, SS, & 633	CONCRETE WALKS (TYPE SPECIAL)	44	SQ. YD.
SP, SS, & 633	HAND RAILING	80	LIN. FT.
SS & 634	CONCRETE COMBINATION CURB AND GUTTER (TYPE A) (1' 6")	16539	LIN. FT.
635	ROADWAY CONSTRUCTION CONTROL	1.00	LUMP SUM
637	MAILBOXES	16	EACH
637	MAILBOX SUPPORTS (SINGLE)	10	EACH
637	MAILBOX SUPPORTS (DOUBLE)	2	EACH
SP, SS, & 641	WHEELCHAIR RAMPS (TYPE 3)	173	SQ. YD.
SP & 701	ACTUATED CONTROLLER TS2-TYPE 2 (8 PHASES)	1	EACH
SP & 706	TRAFFIC SIGNAL HEAD, LED, (3 SECTION, 1 WAY)	12	EACH
SP & 706	TRAFFIC SIGNAL HEAD, LED, (4 SECTION, 1 WAY)	4	EACH
SP & 707	CENTRAL CONTROL UNIT	1	EACH
SP & 707	POLE MOUNTED ASSEMBLY	8	EACH
SP & 707	INFRARED PROGRAMMING DEVICE	1	EACH
SP & 707	COUNTDOWN PEDESTRIAN SIGNAL HEAD, LED	8	EACH
708	TRAFFIC SIGNAL CABLE (5C/12 A.W.G.)	1350	LIN. FT.
708	TRAFFIC SIGNAL CABLE (5C/14 A.W.G.)	1250	LIN. FT.
708	TRAFFIC SIGNAL CABLE (7C/14 A.W.G.)	310	LIN. FT.
708	TRAFFIC SIGNAL CABLE (20C/14 A.W.G.)	660	LIN. FT.
SP	ELECTRICAL CONDUCTORS-IN-CONDUIT (1C/8 A.W.G., E.G.C.)	650	LIN. FT.
SP	ELECTRICAL CONDUCTORS-IN-CONDUIT (1C/12 A.W.G., E.G.C.)	200	LIN. FT.
SP	ELECTRICAL CONDUCTORS-IN-CONDUIT (2C/6 A.W.G.)	50	LIN. FT.
SP	ELECTRICAL CONDUCTORS FOR LUMINAIRES	860	LIN. FT.
709	GALVANIZED STEEL CONDUIT (1")	48	LIN. FT.
709	GALVANIZED STEEL CONDUIT (2")	20	LIN. FT.
710	NON-METALLIC CONDUIT (2")	1110	LIN. FT.
710	NON-METALLIC CONDUIT (3")	660	LIN. FT.
SS & 711	CONCRETE PULL BOX (TYPE 2)	5	EACH
SS & 711	CONCRETE PULL BOX (TYPE 2 HD)	1	EACH
SS & 711	CONCRETE PULL BOX (TYPE 3 HD)	1	EACH
SS & 714	TRAFFIC SIGNAL MAST ARM AND POLE WITH FOUNDATION (40')	1	EACH
SS & 714	TRAFFIC SIGNAL MAST ARM AND POLE WITH FOUNDATION (42')	1	EACH
SS & 714	TRAFFIC SIGNAL MAST ARM AND POLE WITH FOUNDATION (56')	2	EACH
SP	LED LUMINAIRE ASSEMBLY	4	EACH
SS & 715	TRAFFIC SIGNAL PEDESTAL POLE WITH FOUNDATION	4	EACH
SP	SERVICE POINT ASSEMBLY (2 CIRCUITS)	1	EACH
719	THERMOPLASTIC PAVEMENT MARKING WHITE (6")	2447	LIN. FT.
719	THERMOPLASTIC PAVEMENT MARKING WHITE (12")	913	LIN. FT.
719	THERMOPLASTIC PAVEMENT MARKING YELLOW (6")	20664	LIN. FT.
719	THERMOPLASTIC PAVEMENT MARKING (ARROWS)	8	EACH
721	RAISED PAVEMENT MARKERS (TYPE II)	492	EACH
SP	18" STREET NAME SIGN	2	EACH
SP & 733	HYBRID VIDEO/RADAR DETECTOR	4	EACH
SP & 733	VIDEO CABLE (EXTERIOR CAT 5E)	960	LIN. FT.
SP & 733	VIDEO MONITOR (CLR)	1	EACH
SP & 733	CENTRAL CONTROL UNIT (8 CHANNEL)	1	EACH
SP, SS, & 802	CLASS S CONCRETE-ROADWAY	106.64	CU. YD.
SP	ARCHITECTURAL FINISH	219	SQ. FT.
SP	TEXTURED COATING FINISH	18	SQ. YD.
SS & 804	REINFORCING STEEL-ROADWAY (GRADE 60)	117780	POUND
SS & 816	FILTER BLANKET	1780	SQ. YD.
SS & 816	DUMPED RIPRAP	890	CU. YD.
SP	NEMA 4X STAINLESS STEEL JUNCTION BOX	12	EACH
	STRUCTURES OVER 20' SPAN		
205	REMOVAL OF EXISTING BRIDGE STRUCTURE (SITE NO. 4)	1.00	LUMP SUM
205	REMOVAL OF EXISTING BRIDGE STRUCTURE (SITE NO. 5)	1.00	LUMP SUM
636	BRIDGE CONSTRUCTION CONTROL	1.00	LUMP SUM
801	UNCLASSIFIED EXCAVATION FOR STRUCTURES-BRIDGE	320	CU. YD.
SP, SS, & 802	CLASS S CONCRETE-BRIDGE	1120.3	CU. YD.
SP, SS, & 802	CLASS S(AE) CONCRETE-BRIDGE	3796.5	CU. YD.
SP & 803	CLASS 2 PROTECTIVE SURFACE TREATMENT	14428	SQ. YD.
SS & 804	REINFORCING STEEL-BRIDGE (GRADE 60)	161360	POUND
SS & 804	EPOXY COATED REINFORCING STEEL (GRADE 60)	938620	POUND
SS & 805	STEEL PILING (HP 14X73)	3153	LIN. FT.
SS & 805	STEEL PILING (HP 16X121)	2044	LIN. FT.
SS & 805	STEEL PILING (HP 18X135)	2272	LIN. FT.
SS & 805	PILE ENCASEMENT	1399	LIN. FT.
SS & 805	PREBORING	5079	LIN. FT.
SS & 806	METAL BRIDGE RAILING (TYPE H2)	2717	LIN. FT.
SS & 806	METAL BRIDGE RAILING (TYPE H3)	589	LIN. FT.
SS & 806	METAL BRIDGE RAILING (TYPE H4)	662	LIN. FT.
SS & 806	TRANSITIONAL APPROACH RAILING	20	EACH
SP, SS, & 807	STRUCTURAL STEEL IN BEAM SPANS (A709, GR. 50W)	1462150	POUND
SP, SS, & 807	STRUCTURAL STEEL IN PLATE GIRDER SPANS (A709, GR. 50W)	1868970	POUND
SS & 807	PAINTING STRUCTURAL STEEL	234	TON
SS & 808	ELASTOMERIC BEARINGS	123754	CU. IN.
SS & 809	SILICONE JOINT SEALANT	749	LIN. FT.
812	BRIDGE NAME PLATE (TYPE D)	5	EACH
SS & 816	FILTER BLANKET	3445	SQ. YD.
SS & 816	DUMPED RIPRAP	1581	CU. YD.
SS & 816	FOUNDATION PROTECTION RIPRAP	455	TON
SP	ARCHITECTURAL FINISH	7567	SQ. FT.
SP	TEXTURED COATING FINISH	2624	SQ. YD.

* DENOTES ALTERNATE BID ITEMS.

REVISIONS

DATE	REVISION	SHEET NUMBER
10/12/2023	Revised the Site Use (A+C Method) - Calendar Day Contract Special Provision	88
10/16/2023	Revised the Site Use (A+C Method) - Calendar Day Contract Special Provision, added Prosecution and Progress with Bid Schedule Special Provision	4, 88
10/24/2023	Revised LED Luminaire Assembly (BUG U0 Type), Electrical Conductors-in-Conduit, and Section 404 Letter of Permission Requirements Special Provisions, added Geotextile Fabric and Non-Agitating Concrete Transport Special Provisions, removed Construction in Special Flood Hazard Areas Special Provision, Revised date for SI-3 Standard Drawing, added Bridge Standard Drawings, revised Typical Sections of Improvement, added Rock Fill Special Detail, moved driveway from Sta. 531+76 to 532+14 , revised Base and Surfacing and Concrete Base quantities, revised Driveways and Turnouts quantities, added Pipe Underdrain and Portland Cement Concrete Driveway quantities, added 16' Gates to plans and quantities, revised Item Description for Approach Gutter quantities	3, 5 - 11, 15, 77, 80, 83, 84, 87, 88, 102, 104, 106, 110, 114, 274
10/26/2023	Revised Approach Gutters and Slabs Quantities	78, 87, 88, 212
10/30/2023	Revised Typical Sections of Improvement, Base and Surfacing quantities, and cross sections	8 - 10, 83, 84, 87, 88, 253 - 266

SUMMARY OF QUANITITES AND REVISIONS

rb43088 10/30/2023
R040861.DGN

STATE OF ARKANSAS LICENSED PROFESSIONAL ENGINEER No. 11425 TRINITY D. SMITH

09-27-2023

SURVEY CONTROL COORDINATES

Project Name: s040762
Date: 12/12/2019
Coordinate System: ARKANSAS STATE PLANE - NORTH/SOUTH ZONE BASED ON GPS CONTROL, 650033 - 650033A, 650034 - 650034A, 650035 - 650035A PROJECTED TO GROUND.
Units: U.S. SURVEY FOOT

Point Name	Northing	Easting	Elev	Feature	Description
1	323982.1321	628216.1297	570.69	CTL	ARDOT STD. MON. STAMPED PN: 1
2	324620.7586	628033.9238	592.31	CTL	ARDOT STD. MON. STAMPED PN: 2
3	324629.2090	627468.3828	598.68	CTL	ARDOT STD. MON. STAMPED PN: 3
4	324660.9660	628703.9301	587.96	CTL	ARDOT STD. MON. STAMPED PN: 4
5	324742.5100	629489.4127	589.94	CTL	ARDOT STD. MON. STAMPED PN: 5
6	324776.8856	630287.9110	586.68	CTL	ARDOT STD. MON. STAMPED PN: 6
7	324801.7640	631041.2455	586.71	CTL	ARDOT STD. MON. STAMPED PN: 7
8	324787.3958	631769.4779	583.22	CTL	ARDOT STD. MON. STAMPED PN: 8
9	324816.5721	632426.9289	572.75	CTL	ARDOT STD. MON. STAMPED PN: 9
10	324767.5617	633133.0004	561.83	CTL	ARDOT STD. MON. STAMPED PN: 10
11	324810.9011	633894.9074	550.43	CTL	ARDOT STD. MON. STAMPED PN: 11
12	324993.0825	634559.8626	549.95	CTL	ARDOT STD. MON. STAMPED PN: 12
13	325322.1010	635235.3894	552.97	CTL	ARDOT STD. MON. STAMPED PN: 13
14	325775.4033	636013.8158	544.63	CTL	ARDOT STD. MON. STAMPED PN: 14
15	325737.9350	636426.6135	530.60	CTL	ARDOT STD. MON. STAMPED PN: 15
16	325720.7245	636877.1270	519.35	CTL	ARDOT STD. MON. STAMPED PN: 16
17	325775.4648	637375.8871	504.53	CTL	ARDOT STD. MON. STAMPED PN: 17
18	326253.7014	637450.1007	501.53	CTL	ARDOT STD. MON. STAMPED PN: 18
19	326301.4493	638106.9713	486.55	CTL	ARDOT STD. MON. STAMPED PN: 19
20	325572.3693	638485.7569	490.15	CTL	ARDOT STD. MON. STAMPED PN: 20
21	326662.7328	638925.0931	485.24	CTL	ARDOT STD. MON. STAMPED PN: 21
22	327294.4205	638947.2701	485.50	CTL	ARDOT STD. MON. STAMPED PN: 22
23	326819.7828	639672.3174	483.30	CTL	ARDOT STD. MON. STAMPED PN: 23
24	326745.4677	640607.4779	483.74	CTL	ARDOT STD. MON. STAMPED PN: 24
25	326599.3174	641014.4595	490.53	CTL	ARDOT STD. MON. STAMPED PN: 25
26	326519.5199	641146.5482	486.03	CTL	ARDOT STD. MON. STAMPED PN: 26
27	326167.7947	641870.6685	498.46	CTL	ARDOT STD. MON. STAMPED PN: 27
28	326664.6578	641450.9395	490.25	CTL	ARDOT STD. MON. STAMPED PN: 28
29	326955.7776	641952.0082	488.90	CTL	ARDOT STD. MON. STAMPED PN: 29
30	325900.9769	642311.7061	509.84	CTL	ARDOT STD. MON. STAMPED PN: 30
31	325841.1589	643106.4878	526.84	CTL	ARDOT STD. MON. STAMPED PN: 31
32	325784.5193	643650.6412	514.33	CTL	ARDOT STD. MON. STAMPED PN: 32
33	325369.6791	644742.7902	518.94	CTL	ARDOT STD. MON. STAMPED PN: 33
100	325239.3730	627819.3443	591.91	GPS	ARDOT GPS *650033
101	326706.2456	627379.1970	549.99	GPS	ARDOT GPS *650033A
102	323481.4688	637258.3751	494.50	GPS	ARDOT GPS *650034
103	325191.6407	637394.0153	498.13	GPS	ARDOT GPS *650034A
104	325850.9602	642839.5661	523.05	GPS	ARDOT GPS *650035
105	325660.4480	644093.1619	516.35	GPS	ARDOT GPS *650035A
901	324633.1828	628190.9084	591.72	TBM	CHSQ IN E END CONC ISLE
902	324725.4237	629289.1142	586.02	TBM	CHSQ IN N HW 22' N OF C/L HWY. 10
903	324834.6770	632112.9346	577.48	TBM	CHSQ IN N HW 17.8' N OF C/L HWY. 10
904	324936.4927	634307.7454	548.31	TBM	CHSQ IN N HW
905	325725.0180	636773.1714	519.14	TBM	CHSQ IN S HW
906	325700.7020	637342.7915	504.36	TBM	CHSQ IN S HW
907	325271.7794	635246.3273	549.74	TBM	CHSQ IN HW S OF HWY
908	326859.5509	641234.5951	494.17	TBM	CHSQ IN SE COR OF BR
909	325856.7102	642803.3815	524.07	TBM	SE BOLT OF SI POLE BASE
910	325620.4394	644239.0391	516.67	TBM	CHSQ IN S HW 23' S OF C/L HWY. 10
999	327853.8031	627220.1366	598.75	BM	NGS 1ST ORDER BM U 298

*Note - Rebar and Cap - Standard - 5/8" Rebar with 2" Aluminum Cap stamped
*(standard markings common to all caps), or as indicated
(other markings indicated in the point description of the individual point).
ALL DISTANCES ARE GROUND.
USE CAF = 1.0 FOR STAKEOUT FOR THIS PROJECT.
A PROJECT CAF OF 0.999936797722 HAS BEEN USED TO COMPUTE THE ABOVE GROUND COORDINATES.
THIS CAF IS INTENDED FOR USE WITHIN THE PROJECT LIMITS.
GRID DISTANCE = GROUND DISTANCE X CAF.
GRID COORDINATES ARE STORED UNDER FILE NAME s040762gi.CTL
HORIZONTAL DATUM: NAD 83 (2011)
VERTICAL DATUM: NAVD 88 POSITIONAL ACCURACY THIRD ORDER, UNLESS SPECIFIED OTHERWISE AT A SPECIFIC POINT.

REFERENCE POINTS (1500 SERIES) ARE TO BE USED TO ESTABLISH CONTROL IF THE PRIMARY CONTROL POINTS LISTED ABOVE HAVE BEEN DESTROYED.
REFERENCE POINTS ARE NOT TO BE USED FOR VERTICAL CONTROL

BASIS OF BEARING:
ARKANSAS STATE PLANE GRID BEARINGS - 0301-NORTH ZONE
DETERMINED FROM GPS CONTROL POINTS: 650033 - 650033A, 650034 - 650034A, 650035 - 650035A
CONVERGENCE ANGLE: 01 19 13.40 LEFT AT PN:12 LT:N 35 12 16.94 LG:W 94 16 08.77
GRID AZIMUTH = ASTRONOMICAL AZIMUTH - CONVERGENCE ANGLE

HWY. 10

POINT NO.	TYPE	STATION	NORTHING	EASTING
8000	POB	100+00.00	324649.6432	628023.8400
8001	PI	126+32.82	324763.5260	630654.1911
8002	PC	140+40.20	324816.0840	632060.5977
8004	PT	143+07.26	324807.3970	632327.2915
8005	PC	145+61.64	324781.3747	632580.3391
8007	PT	148+45.20	324773.3756	632863.5284
8008	PC	157+13.76	324813.3133	633731.1733
8010	PT	166+58.10	325047.1308	634639.2223
8011	PC	169+01.87	325154.9237	634857.8637
8013	PT	170+74.40	325232.9566	635011.7358
8014	PC	180+43.84	325681.1608	635871.3416
8016	PT	183+96.62	325762.2507	636211.0268
8017	PC	192+07.10	325752.5609	637021.4458
8019	PT	204+55.24	326192.2239	638157.4639
8020	PC	212+49.39	326733.8319	638738.2674
8022	PT	229+24.39	326994.8024	640297.7654
8023	PC	236+45.78	326701.3893	640956.7820
8025	PT	241+33.28	326663.8746	641433.4512
8026	PC	243+00.08	326707.0472	641594.5735
8028	PT	246+75.08	326892.4127	641915.6359
8029	POE	250+00.00	327122.1642	642145.3874

S COKER ST

POINT NO.	TYPE	STATION	NORTHING	EASTING
8030	POB	400+00.00	325293.4588	637380.7869
8031	POE	410+00.00	326292.4720	637425.2015

E CENTER ST

POINT NO.	TYPE	STATION	NORTHING	EASTING
8032	POB	499+00.00	327706.0992	639036.2502
8033	PC	502+47.23	327689.1875	639383.0697
8035	PT	504+45.12	327662.5733	639578.9123
8036	PC	509+44.03	327553.0084	640065.6414
8038	PT	515+90.49	327324.5526	640668.1042
8039	PC	520+62.19	327096.9684	641081.2631
8041	PT	525+85.23	326750.5251	641467.0573
8042	PC	527+38.49	326624.9840	641554.9621
8044	PT	529+02.19	326502.7353	641663.3018
8045	POE	533+50.00	326203.6538	641996.5896

MAIN STREET

POINT NO.	TYPE	STATION	NORTHING	EASTING
8046	POB	600+00.00	326767.6850	638775.8811
8047	PC	601+72.60	326897.9936	638662.7026
8049	PT	604+66.47	327169.1562	638569.6754
8050	POE	606+62.44	327364.8376	638580.2897

DATE REVISED	DATE REVISED	FED.RD. DIST.NO.	STATE	JOB NO.	SHEET NO.	TOTAL SHEETS
		6	ARK.	040861	90	291
		SURVEY CONTROL DETAILS				

STATE OF ARKANSAS
LICENSED PROFESSIONAL ENGINEER
No. 11425
TRINITY D. SMITH

09-27-2023

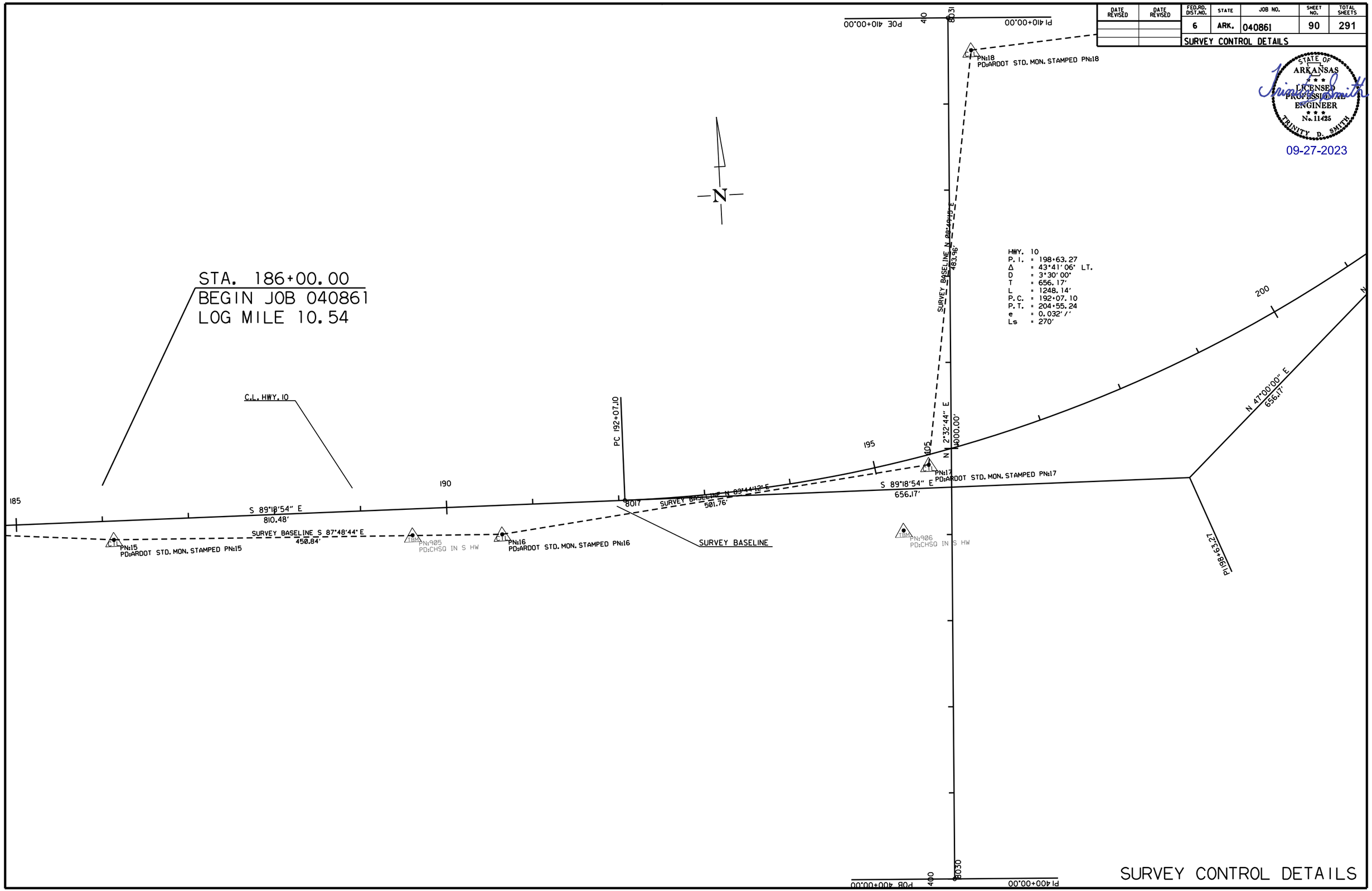

SURVEY CONTROL DETAILS

rb43088 9/15/2023
R040861.DGN

DATE REVISED	DATE REVISED	FED.RD. DIST.NO.	STATE	JOB NO.	SHEET NO.	TOTAL SHEETS
		6	ARK.	040861	91	291

SURVEY CONTROL DETAILS

STATE OF ARKANSAS
LICENSED PROFESSIONAL ENGINEER
No. 11425
TRINITY D. SMITH

09-27-2023

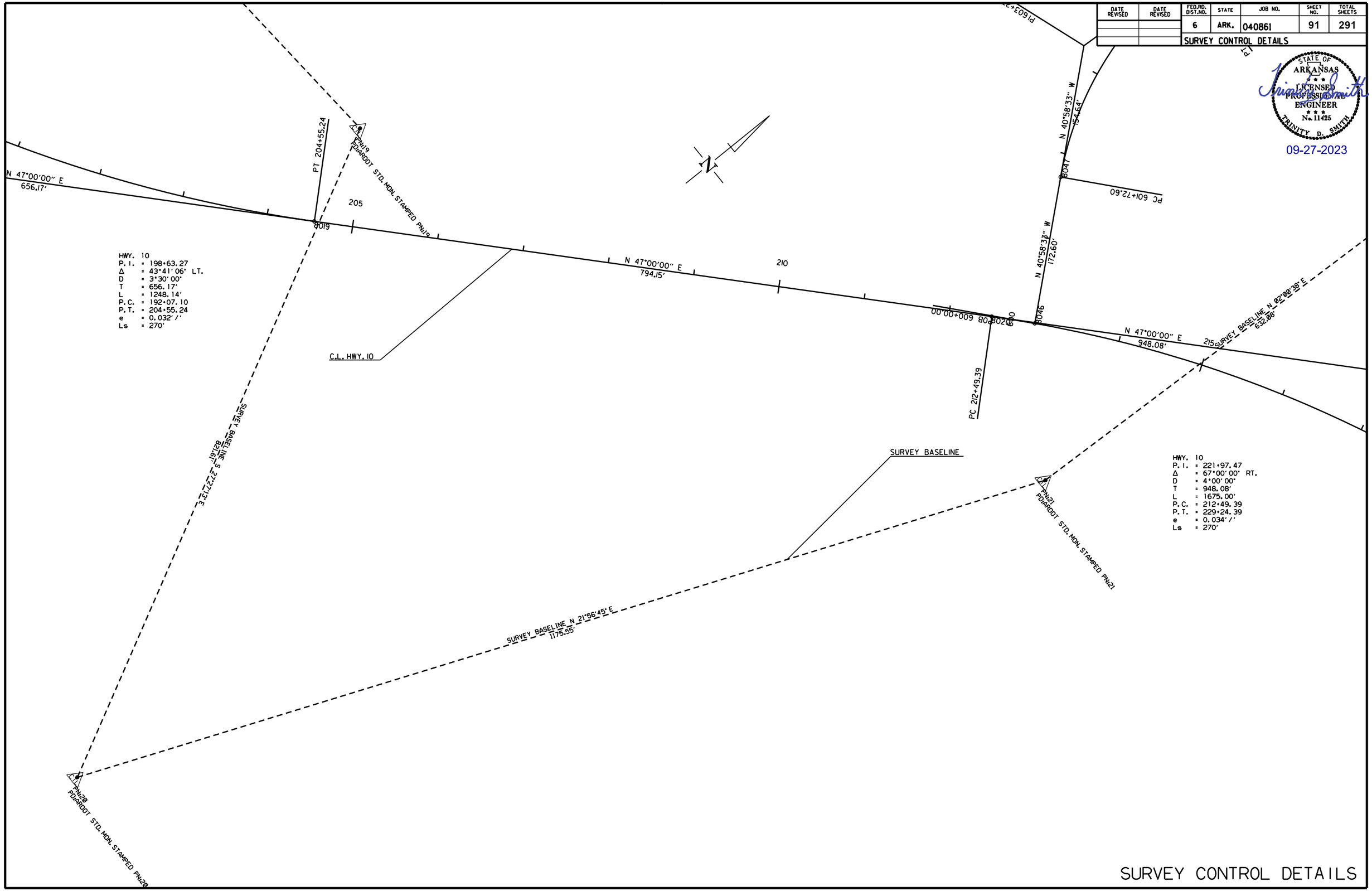

SURVEY CONTROL DETAILS

rb43088 9/15/2023
R040861.DGN

DATE REVISED	DATE REVISED	FED.RD. DIST.NO.	STATE	JOB NO.	SHEET NO.	TOTAL SHEETS
		6	ARK.	040861	92	291
		SURVEY CONTROL DETAILS				

STATE OF ARKANSAS
LICENSED PROFESSIONAL ENGINEER
No. 11425
TRINITY D. SMITH

09-27-2023

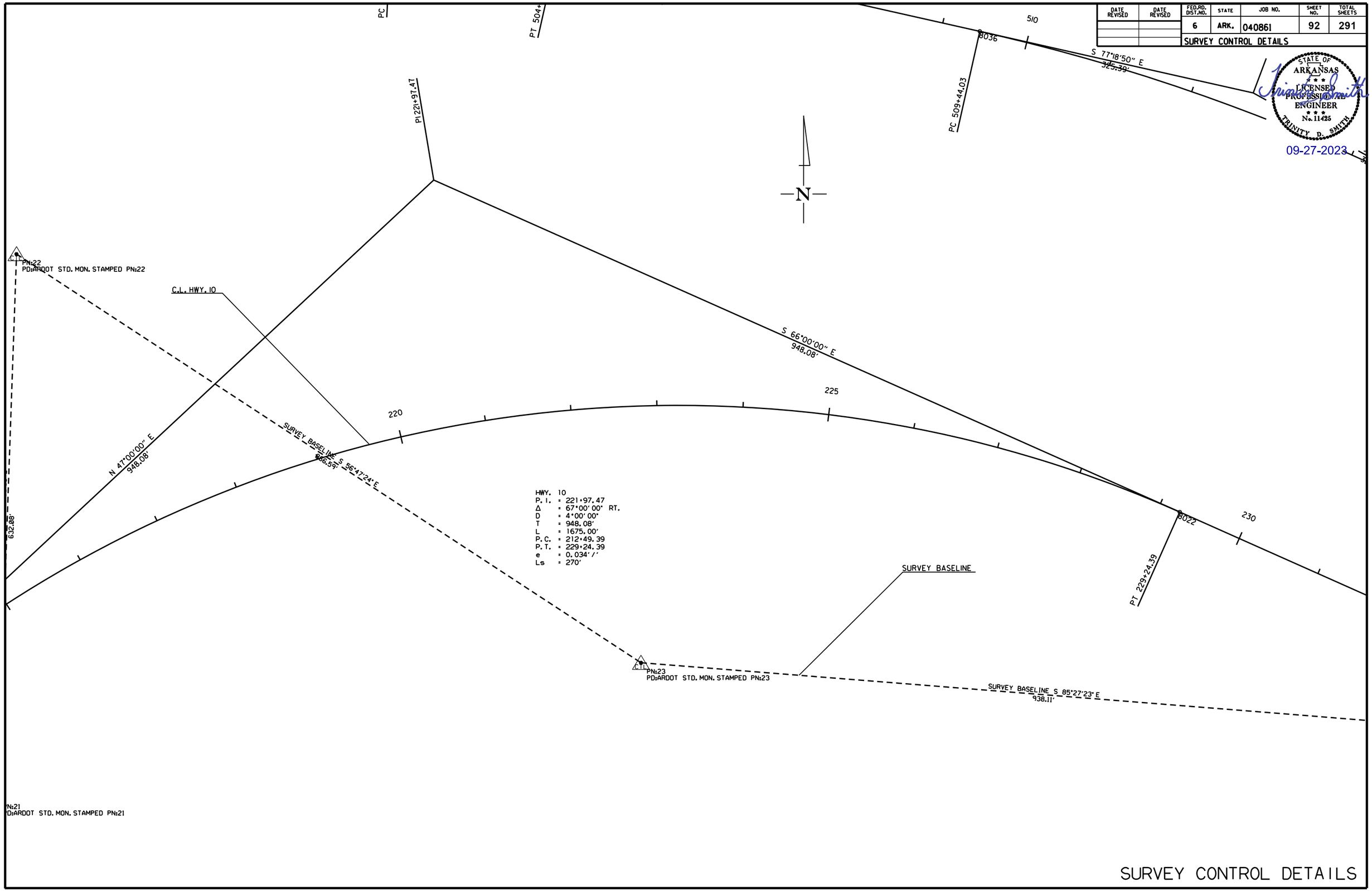

SURVEY CONTROL DETAILS

rb43088 9/15/2023
R040861.DGN

DATE REVISED	DATE REVISED	FED.RD. DIST.NO.	STATE	JOB NO.	SHEET NO.	TOTAL SHEETS
		6	ARK.	040861	93	291
		SURVEY CONTROL DETAILS				

STATE OF ARKANSAS
LICENSED PROFESSIONAL ENGINEER
No. 11425
TRINITY D. SMITH

09-27-2023

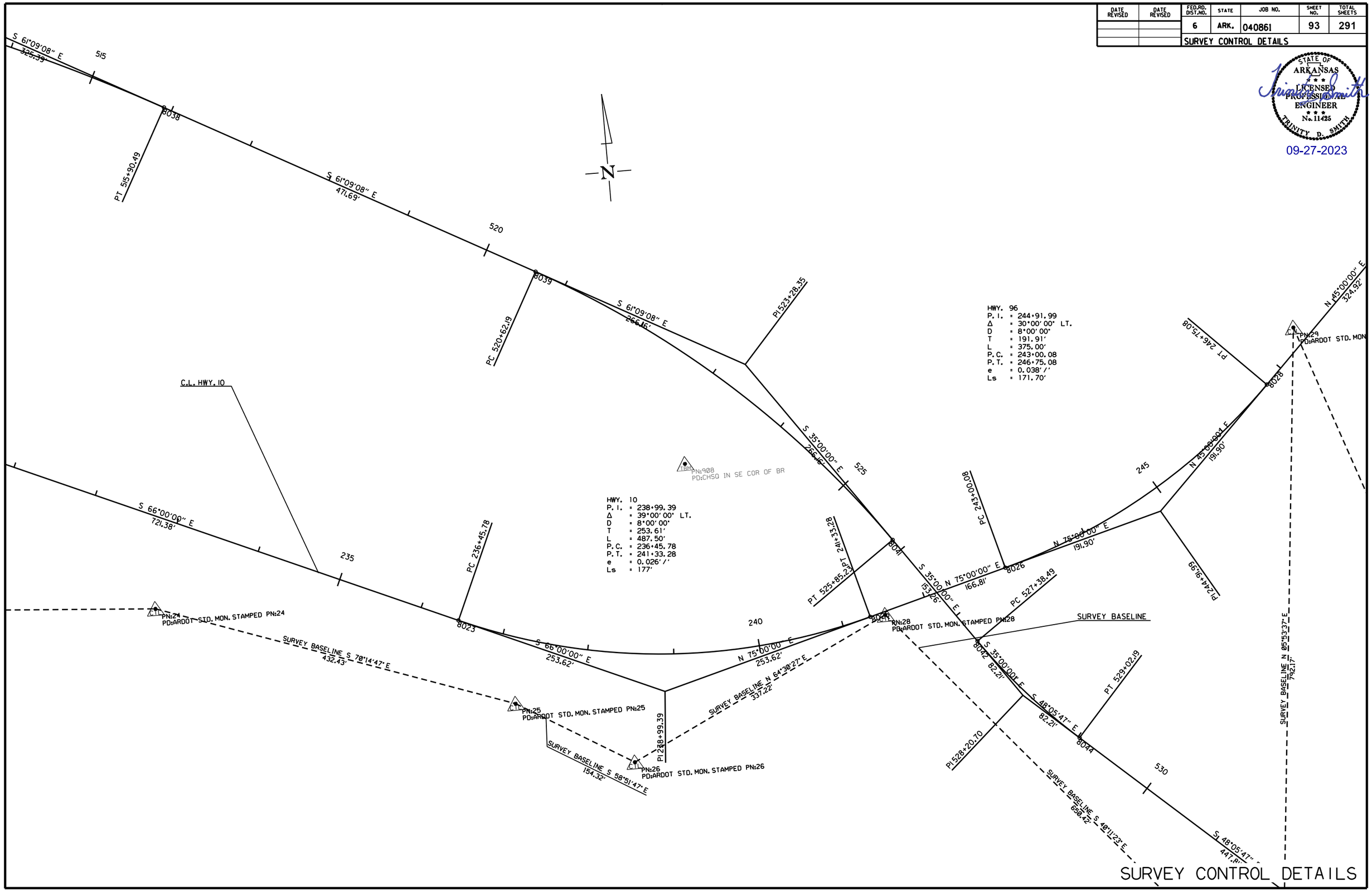

SURVEY CONTROL DETAILS

rb43088 9/15/2023
R040861.DGN

DATE REVISED	DATE REVISED	FED.RD. DIST.NO.	STATE	JOB NO.	SHEET NO.	TOTAL SHEETS
		6	ARK.	040861	94	291
		SURVEY CONTROL DETAILS				

STATE OF ARKANSAS
LICENSED PROFESSIONAL ENGINEER
No. 11425
TRINITY D. SMITH

09-27-2023

HWY. 96
P.I. = 244+91.99
Δ = 30°00'00" LT.
D = 8°00'00"
T = 191.91'
L = 375.00'
P.C. = 243+00.08
P.T. = 246+75.08
e = 0.038'/'
Ls = 171.70'

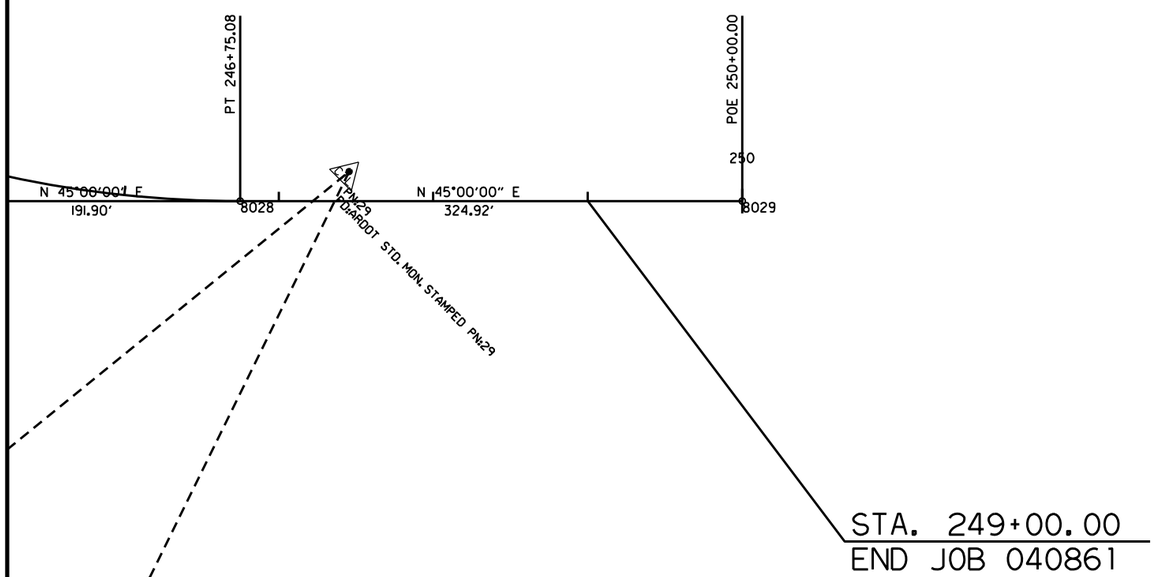

SURVEY CONTROL DETAILS

rb43088 9/15/2023
R040861.DGN

DATE REVISED	DATE REVISED	FED.RD. DIST.NO.	STATE	JOB NO.	SHEET NO.	TOTAL SHEETS
		6	ARK.	040861	95	291
		SURVEY CONTROL DETAILS				

STATE OF ARKANSAS
LICENSED PROFESSIONAL ENGINEER
No. 11425
TRINITY D. SMITH

09-27-2023

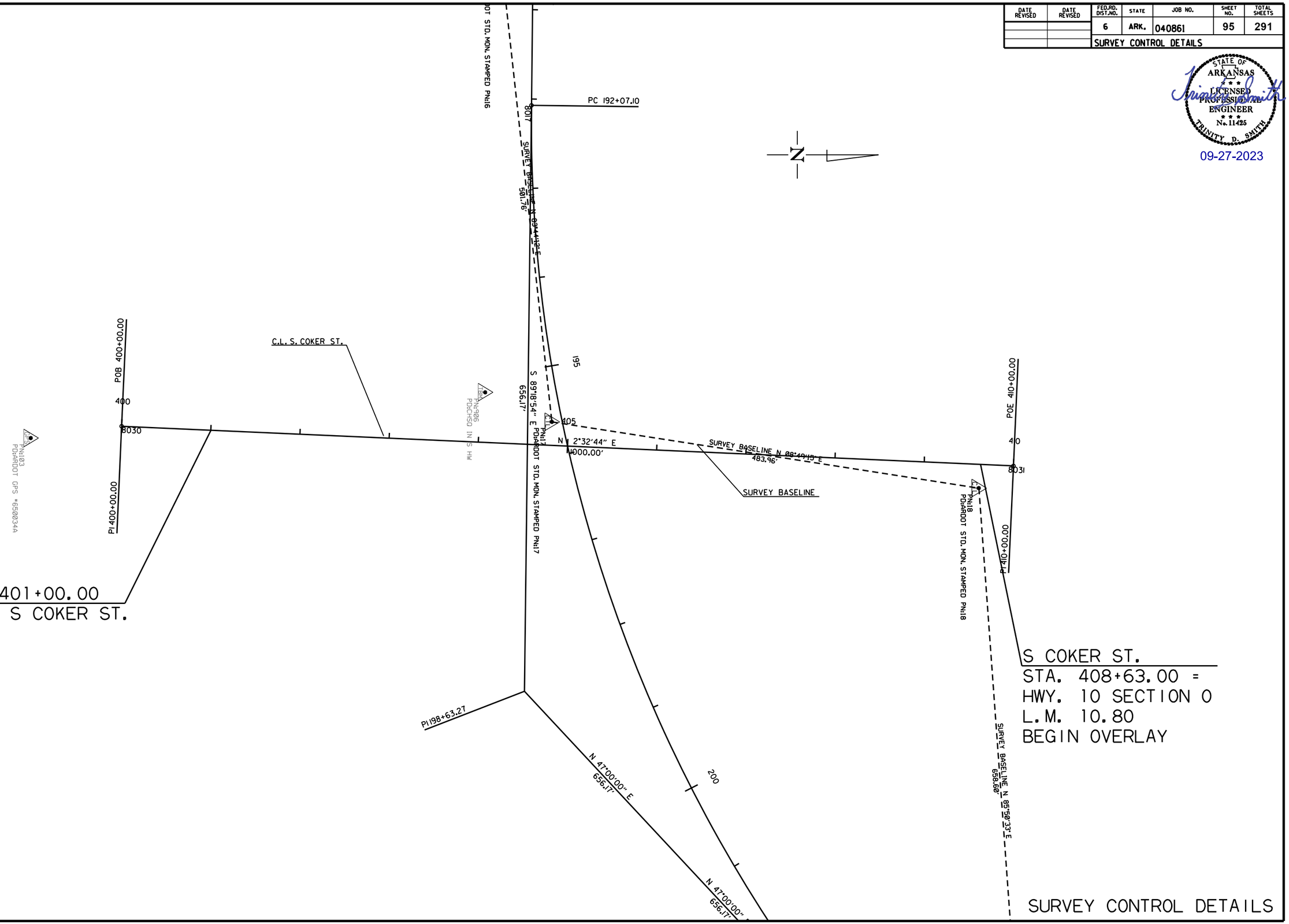

SURVEY CONTROL DETAILS

rb43088 9/15/2023
R040861.DGN

DATE REVISED	DATE REVISED	FED.RD. DIST.NO.	STATE	JOB NO.	SHEET NO.	TOTAL SHEETS
		6	ARK.	040861	96	291
		SURVEY CONTROL DETAILS				

STATE OF ARKANSAS
LICENSED PROFESSIONAL ENGINEER
No. 11425
TRINITY D. SMITH

09-27-2023

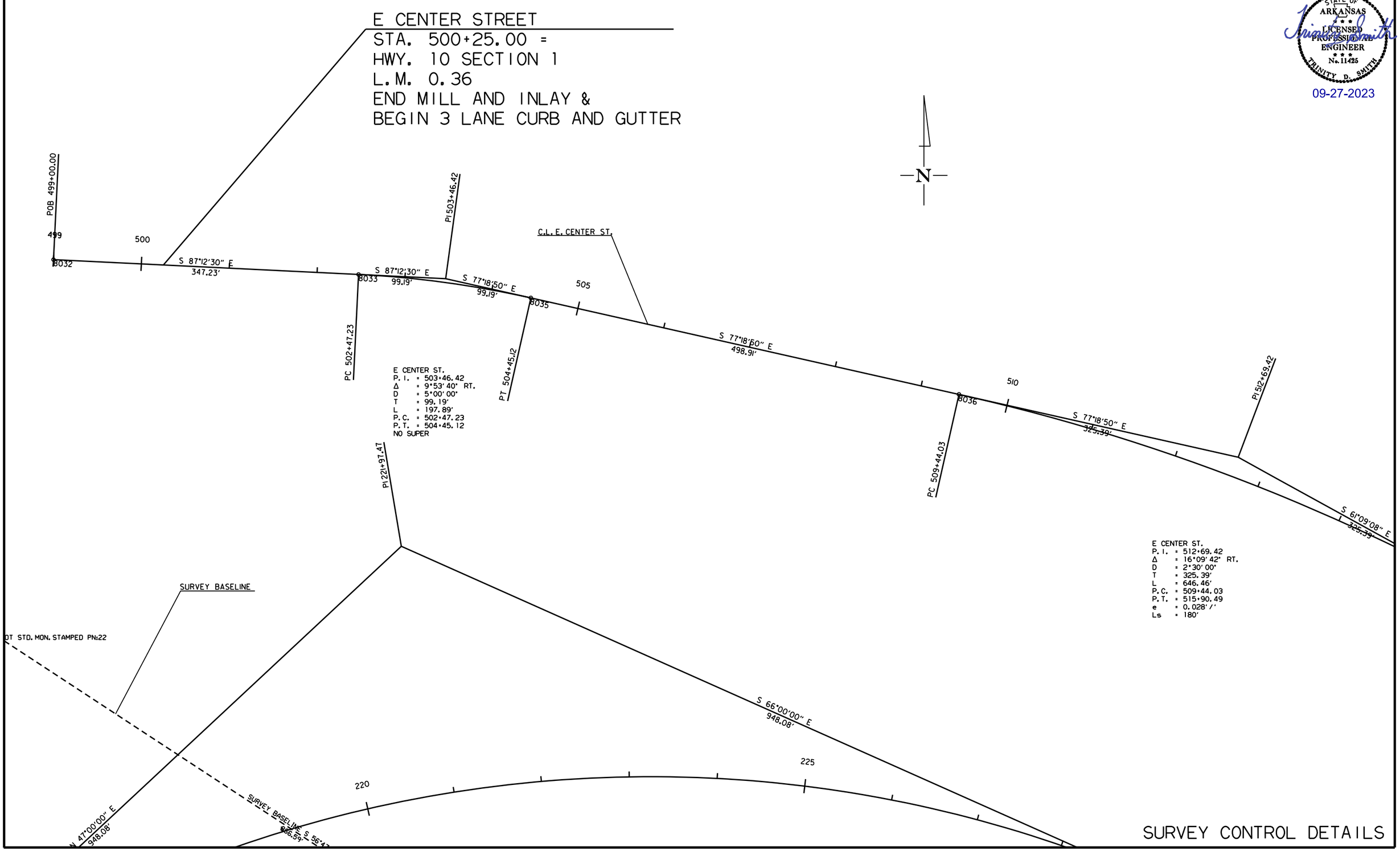

SURVEY CONTROL DETAILS

rb43088 9/15/2023
R040861.DGN

DATE REVISED	DATE REVISED	FED.RD. DIST.NO.	STATE	JOB NO.	SHEET NO.	TOTAL SHEETS
		6	ARK.	040861	97	291
		SURVEY CONTROL DETAILS				

STATE OF ARKANSAS
LICENSED PROFESSIONAL ENGINEER
No. 11425
TRINITY D. SMITH

09-27-2023

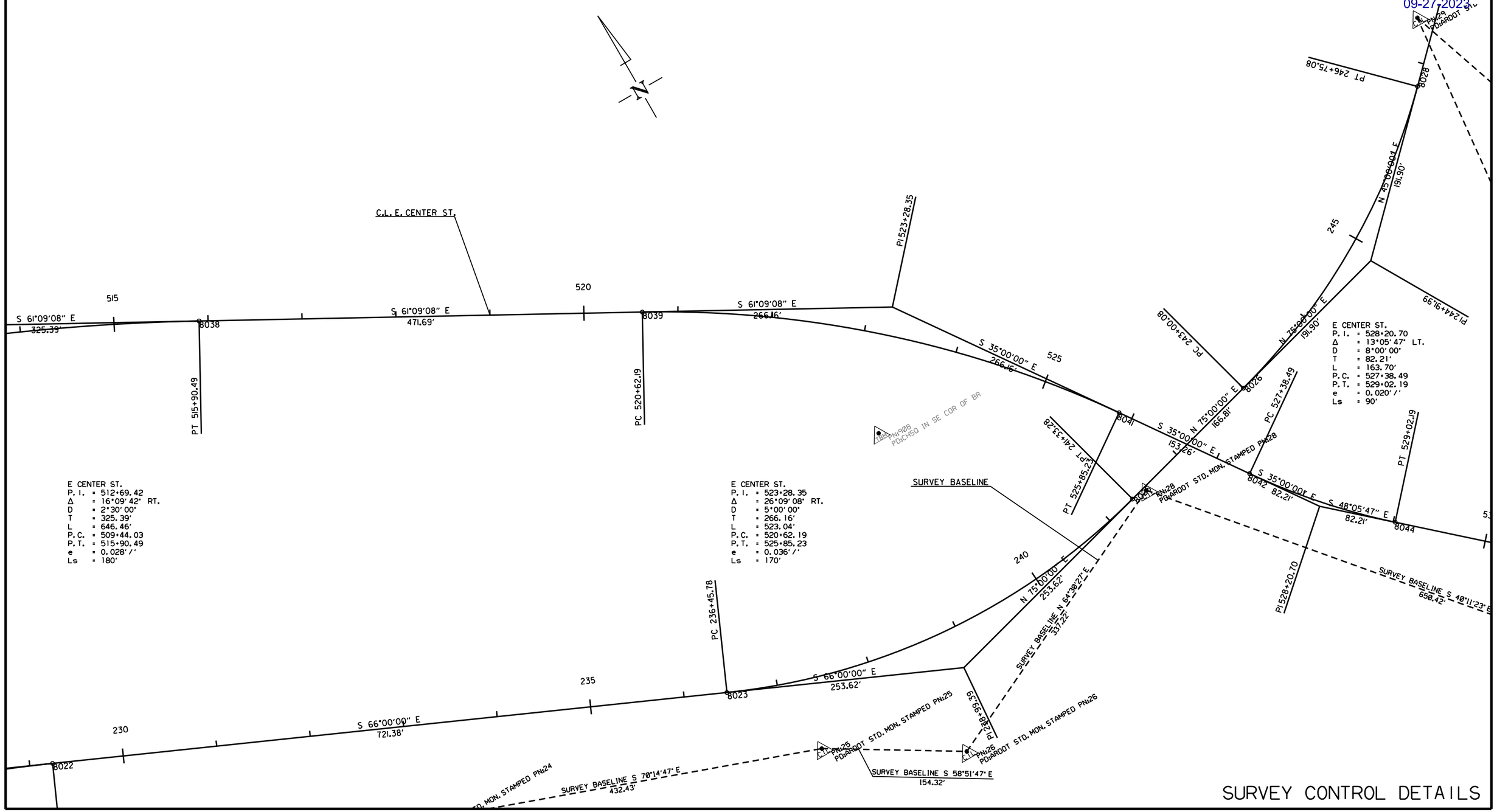

SURVEY CONTROL DETAILS

rb43088 9/15/2023
R040861.DGN

DATE REVISED	DATE REVISED	FED.RD. DIST.NO.	STATE	JOB NO.	SHEET NO.	TOTAL SHEETS
		6	ARK.	040861	98	291
		SURVEY CONTROL DETAILS				

STATE OF ARKANSAS
LICENSED PROFESSIONAL ENGINEER
No. 11425
TRINITY D. SMITH

09-27-2023

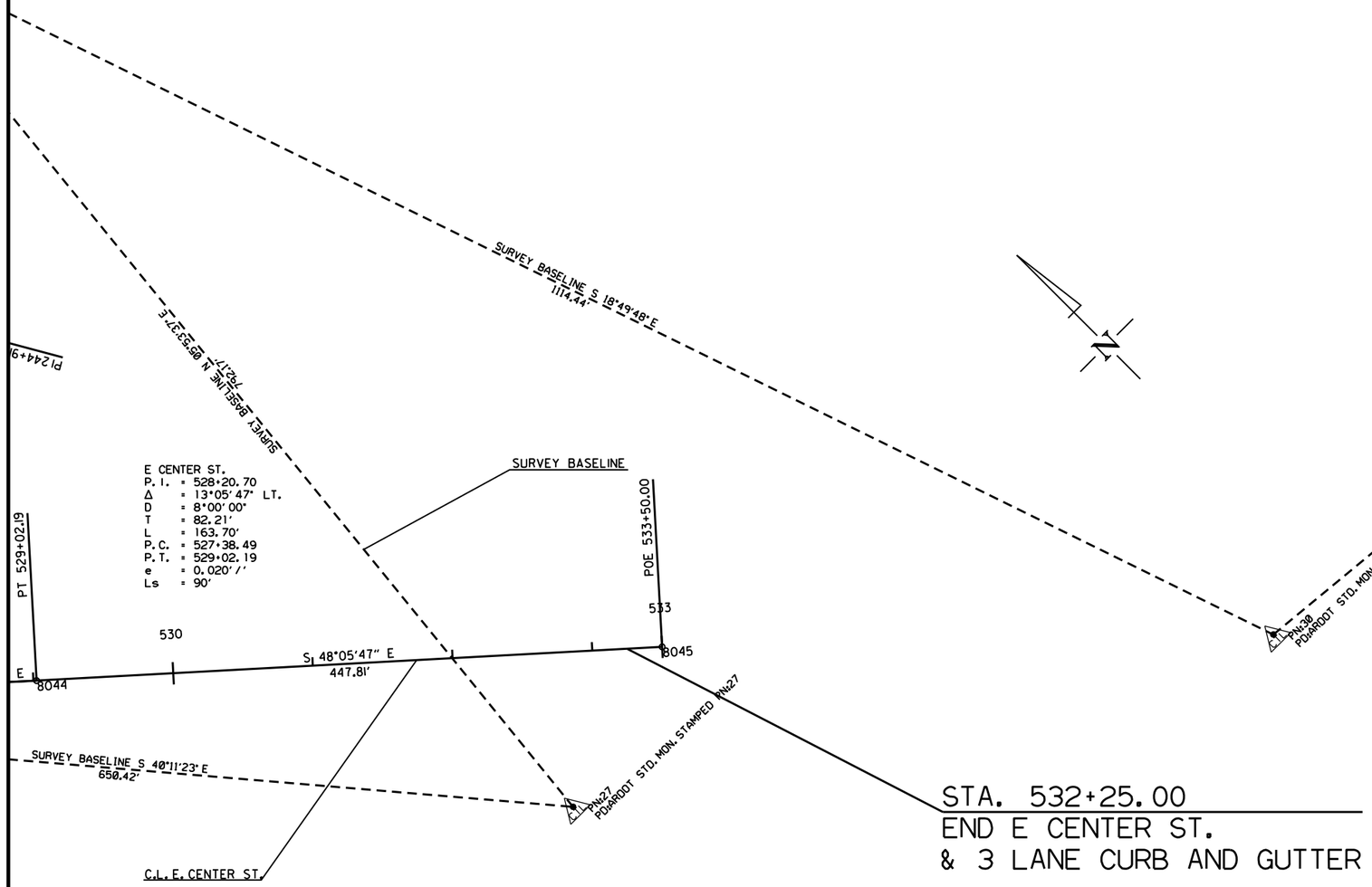

SURVEY CONTROL DETAILS

rb43088 9/15/2023
R040861.DGN

DATE REVISED	DATE REVISED	FED.RD. DIST.NO.	STATE	JOB NO.	SHEET NO.	TOTAL SHEETS
		6	ARK.	040861	99	291
		SURVEY CONTROL DETAILS				

STATE OF ARKANSAS
LICENSED PROFESSIONAL ENGINEER
No. 11425
TRINITY D. SMITH

09-27-2023

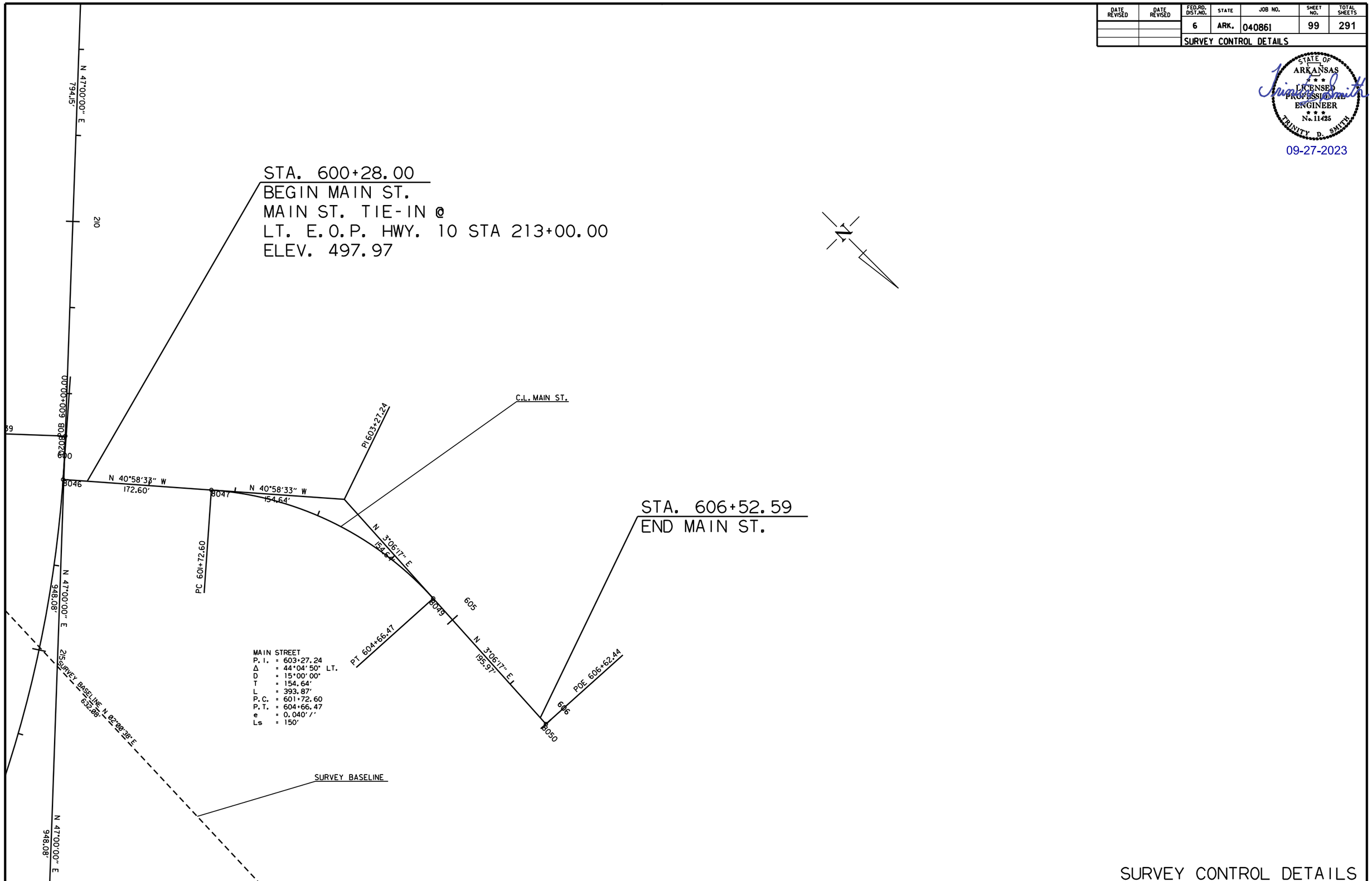

SURVEY CONTROL DETAILS

rb43088 9/15/2023
R040861.DGN

DATE REVISED	DATE REVISED	FED.RD. DIST.NO.	STATE	JOB NO.	SHEET NO.	TOTAL SHEETS
		6	ARK.	040861	100	291
		PLAN AND PROFILE SHEETS				

STATE OF ARKANSAS
LICENSED PROFESSIONAL ENGINEER
No. 11425
TRINITY D. SMITH
09-27-2023

STA. 186+84 CONSTRUCT
DROP INLET ON LT. W/ 4' EXTENSION
AND 18" X 341' PIPE OUTLET
CONNECT TO DROP INLET @ STA. 190+25 LT.
DROP INLET H = 4'-2"
TYPE MO DROP INLET = 4' DIA.
TYPE C DROP INLET = 3' X 4'
18" R.C. PIPE (CLASS III)(TYPE 3) = 341 LIN. FT.
18" SLPCCS PIPE (TYPE 2) = 341 LIN. FT.

STA. 190+25 CONSTRUCT
DROP INLET ON LT.
AND 48" X 19' PIPE INLET W/ F.E.S.
AND 48" X 64' PIPE OUTLET
CONNECT TO DROP INLET @ STA. 190+25 RT.
DROP INLET H = 7'-2"
TYPE MO DROP INLET = 6' DIA.
TYPE C DROP INLET = 3' X 4'
48" R.C. PIPE (CLASS III)(TYPE 3) = 19 LIN. FT.
48" R.C. PIPE (CLASS IV)(TYPE 3) = 83 LIN. FT.
D.A. = 11.06 AC 050 = 28.6 C.F.S.

STA. 191+95 CONSTRUCT
DROP INLET ON LT. W/ 4' EXTENSION
AND 18" X 20' PIPE INLET W/ F.E.S.
AND 18" X 41' PIPE OUTLET
CONNECT TO DROP INLET @ STA. 192+34 LT.
DROP INLET H = 3'-0"
TYPE MO DROP INLET = 4' DIA.
TYPE C DROP INLET = 3' X 4'
18" R.C. PIPE (CLASS III)(TYPE 3) = 61 LIN. FT.
18" SLPCCS PIPE (TYPE 2) = 61 LIN. FT.

STA. 192+34 CONSTRUCT
DROP INLET ON LT.
AND 18" X 27' PIPE INLET W/ F.E.S.
AND 18" X 61' PIPE OUTLET
CONNECT TO DROP INLET @ STA. 192+88 LT.
DROP INLET H = 4'-2"
TYPE MO DROP INLET = 4' DIA.
TYPE C DROP INLET = 3' X 4'
18" R.C. PIPE (CLASS III)(TYPE 3) = 88 LIN. FT.
18" SLPCCS PIPE (TYPE 2) = 88 LIN. FT.

STA. 192+45 CONSTRUCT
APPROACH ON RT. = 5 CU. YD.

STA. 192+88 CONSTRUCT
DROP INLET ON LT.
AND 18" X 169' PIPE OUTLET
CONNECT TO DROP INLET @ STA. 194+60 LT.
DROP INLET H = 4'-9"
TYPE MO DROP INLET = 4' DIA.
TYPE C DROP INLET = 3' X 4'
18" R.C. PIPE (CLASS III)(TYPE 3) = 169 LIN. FT.
18" SLPCCS PIPE (TYPE 2) = 169 LIN. FT.

STA. 194+60 CONSTRUCT
DROP INLET ON LT. W/ 8' EXTENSION
AND STUB INLET 18" X 16' PIPE
AND 24" X 41' R.C. PIPE OUTLET
CONNECT TO DROP INLET @ STA. 194+60 RT.
DROP INLET H = 4'-9"
TYPE MO DROP INLET = 4' DIA.
TYPE C DROP INLET = 3' X 4'
18" R.C. PIPE (CLASS III)(TYPE 3) =16 LIN. FT.
24" R.C. PIPE (CLASS IV)(TYPE 3) = 41 LIN. FT.
18" SLPCCS PIPE (TYPE 2) = 16 LIN. FT.
D.A. = 2.79 AC 050 = 4.78 C.F.S.

STA. 195+18 CONSTRUCT
DROP INLET ON LT.
AND 18" X 57' PIPE OUTLET
CONNECT TO DROP INLET @ STA. 194+60 LT.
DROP INLET H = 3'-0"
TYPE MO DROP INLET = 4' DIA.
TYPE C DROP INLET = 3' X 4'
18" R.C. PIPE (CLASS III)(TYPE 3) = 57 LIN. FT.
18" SLPCCS PIPE (TYPE 2) = 57 LIN. FT.

STA. 196+99 CONSTRUCT
JUNCTION BOX ON LT.
AND 18" X 52' PIPE OUTLET
CONNECT TO DROP INLET @ STA. 197+50 LT.
DROP INLET H = 5'-6"
TYPE E JUNCTION BOX = 6' X 6'
18" R.C. PIPE (CLASS III)(TYPE 3) = 52 LIN. FT.
18" SLPCCS PIPE (TYPE 2) = 52 LIN. FT.

STA. 197+50 CONSTRUCT
DROP INLET ON LT.
AND 18" X 196' PIPE OUTLET
CONNECT TO DROP INLET @ STA. 199+50 LT.
DROP INLET H = 4'-9"
TYPE MO DROP INLET = 4' DIA.
TYPE C DROP INLET = 3' X 4'
18" R.C. PIPE (CLASS III)(TYPE 3) = 196 LIN. FT.
18" SLPCCS PIPE (TYPE 2) = 196 LIN. FT.

STA. 199+50 CONSTRUCT
DROP INLET ON LT.
AND 18" X 149' PIPE OUTLET
CONNECT TO DROP INLET @ STA. 201+02 LT.
DROP INLET H = 4'-3"
TYPE MO DROP INLET = 4' DIA.
TYPE C DROP INLET = 3' X 4'
18" R.C. PIPE (CLASS III)(TYPE 3) = 149 LIN. FT.
18" SLPCCS PIPE (TYPE 2) = 149 LIN. FT.

STA. 186+00.00
BEGIN JOB 040861
LOG MILE 10.54

STA. 186+03 CONSTRUCT
TYPE 3 CURB RAMP ON LT.
= 12.1 SQ. YDS.

STA. 192+72 CONSTRUCT
TYPE 3 CURB RAMP ON LT.
= 12.1 SQ. YDS.

STA. 192+17 CONSTRUCT
TYPE 3 CURB RAMP ON LT.
= 12.1 SQ. YDS.

STA. 196+76 CONSTRUCT
TYPE 3 CURB RAMP ON LT.
= 6.1 SQ. YDS.

STA. 195+40 CONSTRUCT
TYPE 3 CURB RAMP ON LT.
= 12.5 SQ. YDS.

S COKER ST.
STA. 408+63.00 =
HWY. 10 SECTION 0
L.M. 10.80
BEGIN OVERLAY

C.L. HWY. 10 STA. 195+91.67 =
C.L. E CENTER ST. STA. 405+00.00
Δ = 74°40' 47"

STA. 195+15 CONSTRUCT
TYPE 3 CURB RAMP ON RT.
= 6.1 SQ. YDS.

STA. 196+31 CONSTRUCT
TYPE 3 CURB RAMP ON RT.
= 8.1 SQ. YDS.

STA. 186+08 CONSTRUCT
TYPE 3 CURB RAMP ON RT.
= 5.4 SQ. YDS.

STA. 186+84 CONSTRUCT
DROP INLET ON RT. W/ 4' EXTENSION
AND 18" X 185' PIPE OUTLET
CONNECT TO DROP INLET @ STA. 188+69 RT.
DROP INLET H = 6'-0"
TYPE MO DROP INLET = 4' DIA.
TYPE C DROP INLET = 3' X 4'
18" R.C. PIPE (CLASS III)(TYPE 3) = 185 LIN. FT.
18" SLPCCS PIPE (TYPE 2) = 185 LIN. FT.

STA. 187+15 CONSTRUCT
APPROACH ON RT. = 5 CU. YD.

STA. 188+69 CONSTRUCT
DROP INLET ON RT.
AND 18" X 156' PIPE OUTLET
CONNECT TO DROP INLET @ STA. 190+25 RT.
DROP INLET H = 7'-0"
TYPE MO DROP INLET = 4' DIA.
TYPE C DROP INLET = 3' X 4'
18" R.C. PIPE (CLASS III)(TYPE 3) = 156 LIN. FT.
18" SLPCCS PIPE (TYPE 2) = 156 LIN. FT.

STA. 189+18 CONSTRUCT
APPROACH ON RT. = 5 CU. YD.

STA. 190+25 CONSTRUCT
DROP INLET ON RT.
AND 48" X 29' PIPE OUTLET
CONNECT TO JUNCTION BOX @ STA. 190+25, OFF. 61' RT.
DROP INLET H = 8'-9"
TYPE MO DROP INLET = 6' DIA.
TYPE C DROP INLET = 3' X 4'
48" R.C. PIPE (CLASS III)(TYPE 3) = 29 LIN. FT.
48" R.C. PIPE (CLASS IV)(TYPE 3) = 29 LIN. FT.
48" SLPCCS PIPE (TYPE 2) = 29 LIN. FT.

STA. 190+25 CONSTRUCT
JUNCTION BOX 61' RT.
JUNCTION BOX H = 6'-9"
TYPE E JUNCTION BOX = 6' X 10'
CONNECT EXIST. SIDE DRAIN INTO J.B.

STA. 191+93 CONSTRUCT
DROP INLET ON RT. W/ 4' EXTENSION
AND 18" X 168' PIPE OUTLET
CONNECT TO DROP INLET @ STA. 190+25 RT.
DROP INLET H = 5'-9"
TYPE MO DROP INLET = 4' DIA.
TYPE C DROP INLET = 3' X 4'
18" R.C. PIPE (CLASS III)(TYPE 3) = 168 LIN. FT.
18" SLPCCS PIPE (TYPE 2) = 168 LIN. FT.

STA. 192+41 CONSTRUCT
APPROACH ON RT. = 10 CU. YD.

STA. 193+80 CONSTRUCT
APPROACH ON RT. = 15 CU. YD.

STA. 194+60 CONSTRUCT
JUNCTION BOX ON RT.
AND 24" X 54' PIPE OUTLET
CONNECT TO JUNCTION BOX @ STA. 404+34 LT.
JUNCTION BOX H = 6'-9"
TYPE E JUNCTION BOX = 6' X 6'
24" R.C. PIPE (CLASS III)(TYPE 3) = 54 LIN. FT.
24" SLPCCS PIPE (TYPE 2) = 54 LIN. FT.

STA. 191+25 CONSTRUCT
TYPE SPECIAL SIDEWALK ON RT.
= 44 SQ. YD.

STA. 191+25 INSTALL
HAND RAIL ON RT.
= 80 LIN. FT.

STA. 192+12 CONSTRUCT
TYPE 3 CURB RAMP ON RT.
= 5.4 SQ. YDS.

STA. 192+71 CONSTRUCT
TYPE 3 CURB RAMP ON RT.
= 5.4 SQ. YDS.

HWY. 10
P.I. = 198+63.27
Δ = 43°41' 06" LT.
D = 3°30' 00"
T = 656.17'
L = 1248.14'
P.C. = 192+07.10
P.T. = 204+55.24
e = 0.032'/'
Ls = 270'

LEGEND
OBLITERATE EXIST. ROAD

HWY. 10

qh40219 11/1/2021
RD40861.DGN

DATE REVISED	DATE REVISED	FED.RD. DIST.NO.	STATE	JOB NO.	SHEET NO.	TOTAL SHEETS
		6	ARK.	040861	101	291
		PLAN AND PROFILE SHEETS				

STATE OF ARKANSAS
LICENSED PROFESSIONAL ENGINEER
No. 11425
TRINITY D. SMITH

09-27-2023

LEFT SIDE OF HWY. 10

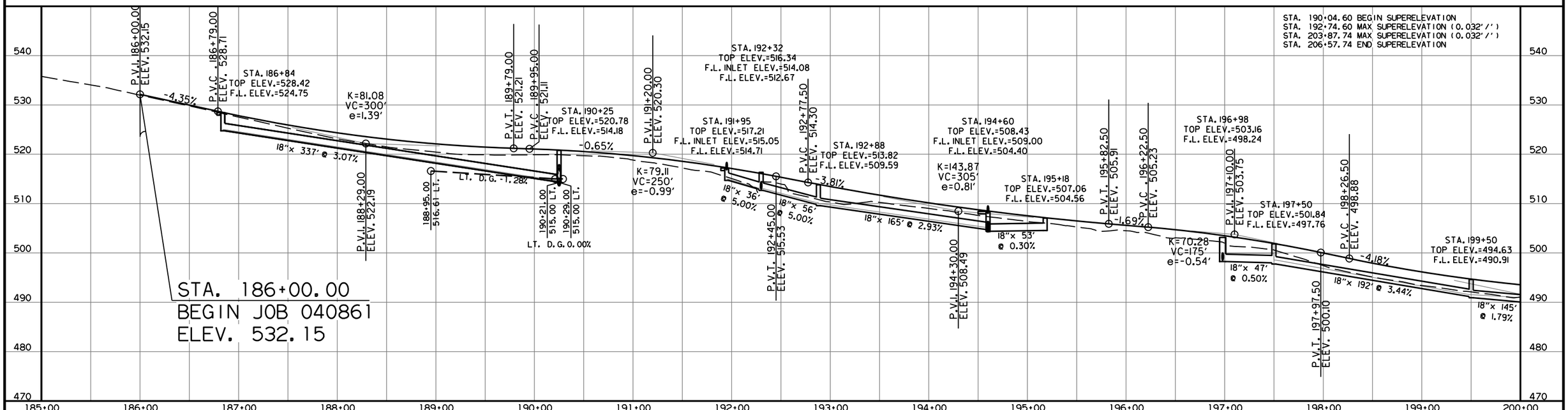

REFER TO SURVEY CONTROL DETAIL SHEETS FOR HORIZONTAL AND VERTICAL CONTROL DATA.

RIGHT SIDE OF HWY. 10

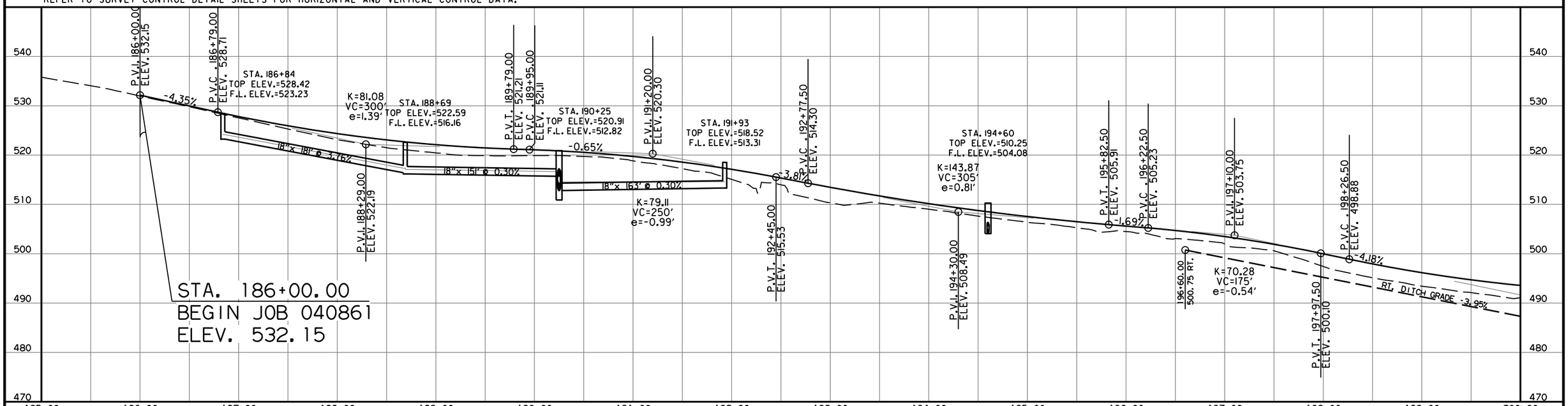

DATE REVISED	DATE REVISED	FED.RD. DIST.NO.	STATE	JOB NO.	SHEET NO.	TOTAL SHEETS
10-24-2023		6	ARK.	040861	102	291
		PLAN AND PROFILE SHEETS				

STATE OF ARKANSAS
LICENSED PROFESSIONAL ENGINEER
No. 11425
TRINITY D. SMITH
10-25-2023

STA. 201+63.75 CONSTRUCT
DROP INLET ON LT.
AND 24" X 61' PIPE OUTLET
CONNECT TO DROP INLET @ STA. 202+26 LT.
DROP INLET H = 5'-0"
TYPE MO DROP INLET = 4' DIA.
TYPE C DROP INLET = 3' X 4'
18" R.C. PIPE (CLASS III)(TYPE 3) = 61 LIN. FT.
18" SLPCCS PIPE (TYPE 2) = 61 LIN. FT.

STA. 201+02 CONSTRUCT
DROP INLET ON LT. W/ 4' EXTENSION
AND 24" X 57' PIPE OUTLET
CONNECT TO DROP INLET @ STA. 201+63.75 LT.
DROP INLET H = 4'-7"
TYPE MO DROP INLET = 4' DIA.
TYPE C DROP INLET = 3' X 4'
18" R.C. PIPE (CLASS III)(TYPE 3) = 61 LIN. FT.
18" SLPCCS PIPE (TYPE 2) = 61 LIN. FT.

STA. 202+26 CONSTRUCT
DROP INLET ON LT. W/ 4' EXTENSION
AND 24" X 16' PIPE OUTLET W/ F.E.S.
DROP INLET H = 5'-7"
TYPE MO DROP INLET = 4' DIA.
TYPE C DROP INLET = 3' X 4'
18" R.C. PIPE (CLASS III)(TYPE 3) = 16 LIN. FT.
18" SLPCCS PIPE (TYPE 2) = 16 LIN. FT.

STA. 204+50 CONSTRUCT
DROP INLET TYPE SPECIAL ON LT.
W/ 4' EXTENSION
DROP INLET H = 1'-0"
TYPE SPECIAL DROP INLET = 4' X 8'

STA. 211+35 CONSTRUCT
DROP INLET TYPE SPECIAL ON LT.
DROP INLET H = 1'-0"
TYPE SPECIAL DROP INLET = 4' X 8'

HWY. 10
P.I. = 198+63.27
Δ = 43°41'06" LT.
D = 3°30'00"
T = 656.17'
L = 1248.14'
P.C. = 192+07.10
P.T. = 204+55.24
e = 0.032'/'
Ls = 270'

SPECIAL FLOOD HAZARD AREA BOUNDARY

HEARTSTILL CREEK

STA. 213+00.00 @ LT. E.O.P.
MAIN ST. CONNECTOR TIE-IN
@ STA. 600+28.00
ELEV. 497.97

C.L. HWY. 10 STA. 213+00.00 =
C.L. MAIN ST. STA. 600+00.00
Δ = 90°00'00"

N 47°00'00" E
HWY. 10

N 40°58'33" W
MAIN ST.

P.O.B. 600+00.00

BRIDGE END
STA. 207+07.86
ELEV.=496.57

BRIDGE END
STA. 211+01.14
ELEV.=497.68

16' - 0" GATE

HWY. 10
P.I. = 221+97.47
Δ = 67°00'00" RT.
D = 4°00'00"
T = 948.08'
L = 1675.00'
P.C. = 212+49.39
P.T. = 229+24.39
e = 0.034'/'
Ls = 270'

STA. 205+75 CONSTRUCT
DROP INLET TYPE SPECIAL ON RT.
DROP INLET H = 1'-0"
TYPE SPECIAL DROP INLET = 4' X 8'

STA. 211+20 CONSTRUCT
DROP INLET TYPE SPECIAL ON RT.
DROP INLET H = 1'-0"
TYPE SPECIAL DROP INLET = 4' X 8'

STA. 213+00 CONSTRUCT
DROP INLET TYPE SPECIAL ON RT.
W/ 4' EXTENSION
DROP INLET H = 1'-0"
TYPE SPECIAL DROP INLET = 4' X 8'

STA. 214+50 CONSTRUCT
DROP INLET TYPE SPECIAL ON RT.
W/ 4' EXTENSION
DROP INLET H = 1'-0"
TYPE SPECIAL DROP INLET = 4' X 8'

HWY. 10

qh40219 11/1/2021
RD40861.DGN

DATE REVISED	DATE REVISED	FED.RD. DIST.NO.	STATE	JOB NO.	SHEET NO.	TOTAL SHEETS
		6	ARK.	040861	103	291
		PLAN AND PROFILE SHEETS				

STATE OF ARKANSAS
LICENSED PROFESSIONAL ENGINEER
No. 11425
TRINITY D. SMITH
09-27-2023

LEFT SIDE OF HWY. 10

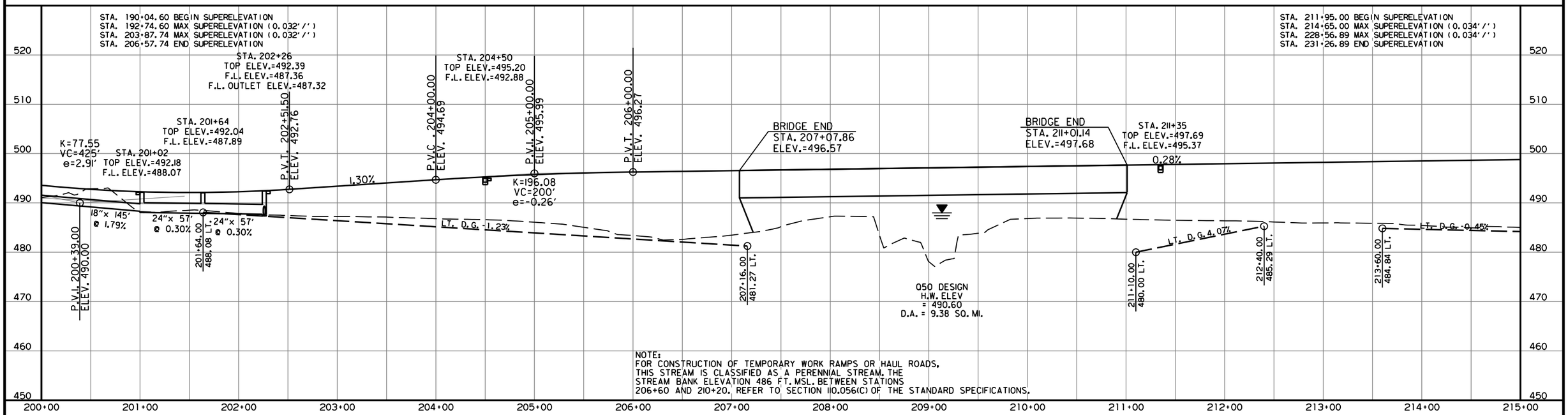

REFER TO SURVEY CONTROL DETAIL SHEETS FOR HORIZONTAL AND VERTICAL CONTROL DATA.

RIGHT SIDE OF HWY. 10

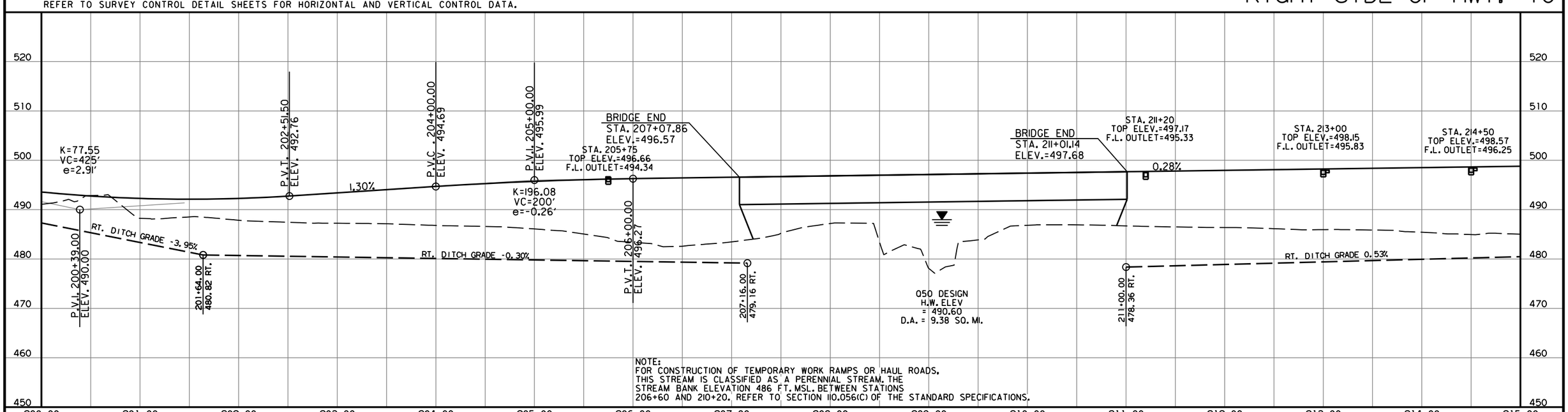

DATE REVISED	DATE REVISED	FED.RD. DIST.NO.	STATE	JOB NO.	SHEET NO.	TOTAL SHEETS
10-24-2023		6	ARK.	040861	104	291

PLAN AND PROFILE SHEETS

STATE OF ARKANSAS LICENSED PROFESSIONAL ENGINEER No. 11425 TRINITY D. SMITH

Trinity D. Smith

10-25-2023

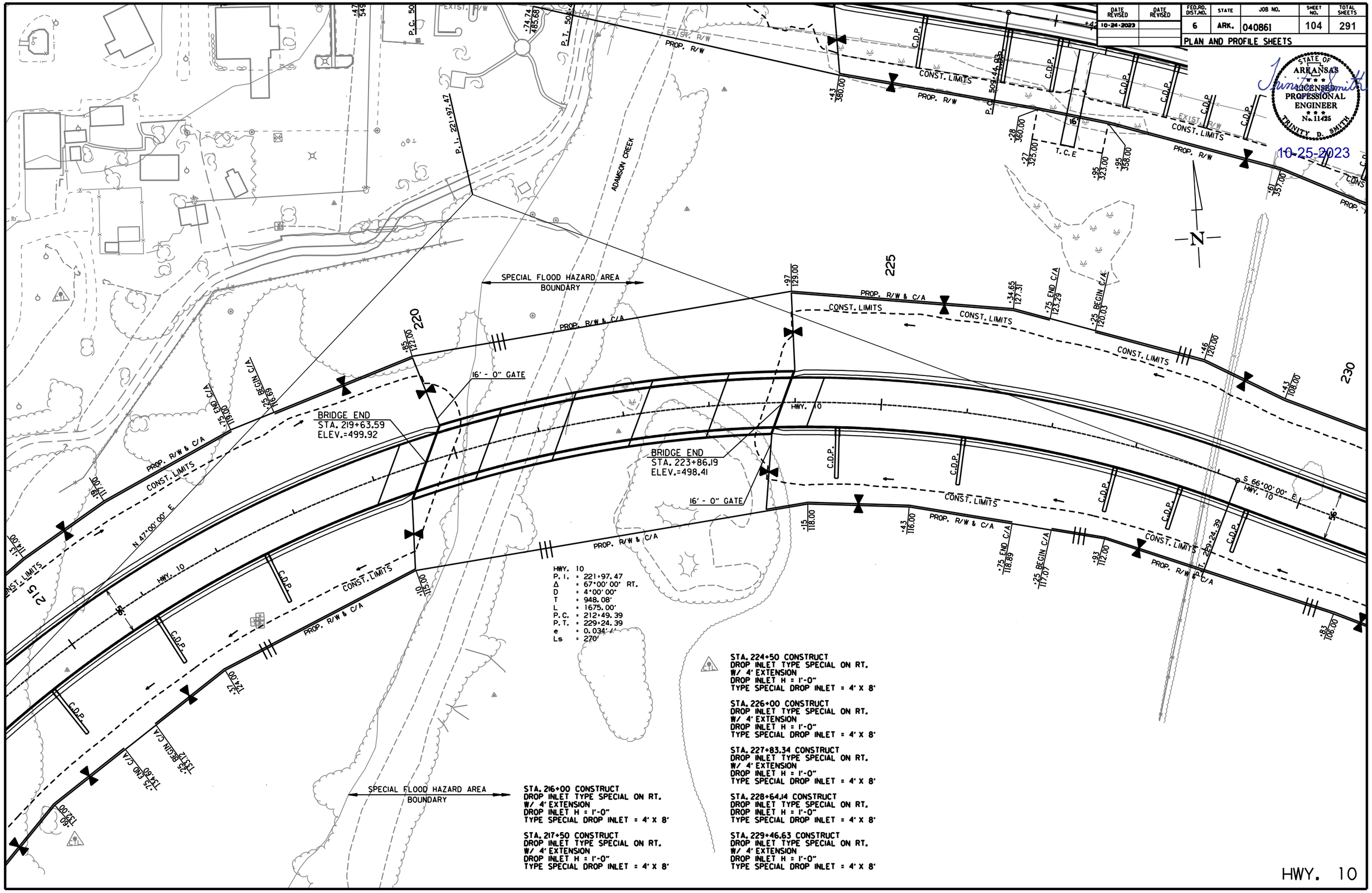

HWY. 10
P.I. = 221+97.47
Δ = 67°00'00" RT.
D = 4°00'00"
T = 948.08'
L = 1675.00'
P.C. = 212+49.39
P.T. = 229+24.39
e = 0.034' /'
Ls = 270'

STA. 216+00 CONSTRUCT
DROP INLET TYPE SPECIAL ON RT.
W/ 4' EXTENSION
DROP INLET H = 1'-0"
TYPE SPECIAL DROP INLET = 4' X 8'

STA. 217+50 CONSTRUCT
DROP INLET TYPE SPECIAL ON RT.
W/ 4' EXTENSION
DROP INLET H = 1'-0"
TYPE SPECIAL DROP INLET = 4' X 8'

STA. 224+50 CONSTRUCT
DROP INLET TYPE SPECIAL ON RT.
W/ 4' EXTENSION
DROP INLET H = 1'-0"
TYPE SPECIAL DROP INLET = 4' X 8'

STA. 226+00 CONSTRUCT
DROP INLET TYPE SPECIAL ON RT.
W/ 4' EXTENSION
DROP INLET H = 1'-0"
TYPE SPECIAL DROP INLET = 4' X 8'

STA. 227+83.34 CONSTRUCT
DROP INLET TYPE SPECIAL ON RT.
W/ 4' EXTENSION
DROP INLET H = 1'-0"
TYPE SPECIAL DROP INLET = 4' X 8'

STA. 228+64.14 CONSTRUCT
DROP INLET TYPE SPECIAL ON RT.
W/ 4' EXTENSION
DROP INLET H = 1'-0"
TYPE SPECIAL DROP INLET = 4' X 8'

STA. 229+46.63 CONSTRUCT
DROP INLET TYPE SPECIAL ON RT.
W/ 4' EXTENSION
DROP INLET H = 1'-0"
TYPE SPECIAL DROP INLET = 4' X 8'

HWY. 10

DATE REVISED	DATE REVISED	FED.RD. DIST.NO.	STATE	JOB NO.	SHEET NO.	TOTAL SHEETS
		6	ARK.	040861	105	291
		PLAN AND PROFILE SHEETS				

STATE OF ARKANSAS
LICENSED PROFESSIONAL ENGINEER
No. 11425
TRINITY D. SMITH

09-27-2023

LEFT SIDE OF HWY. 10

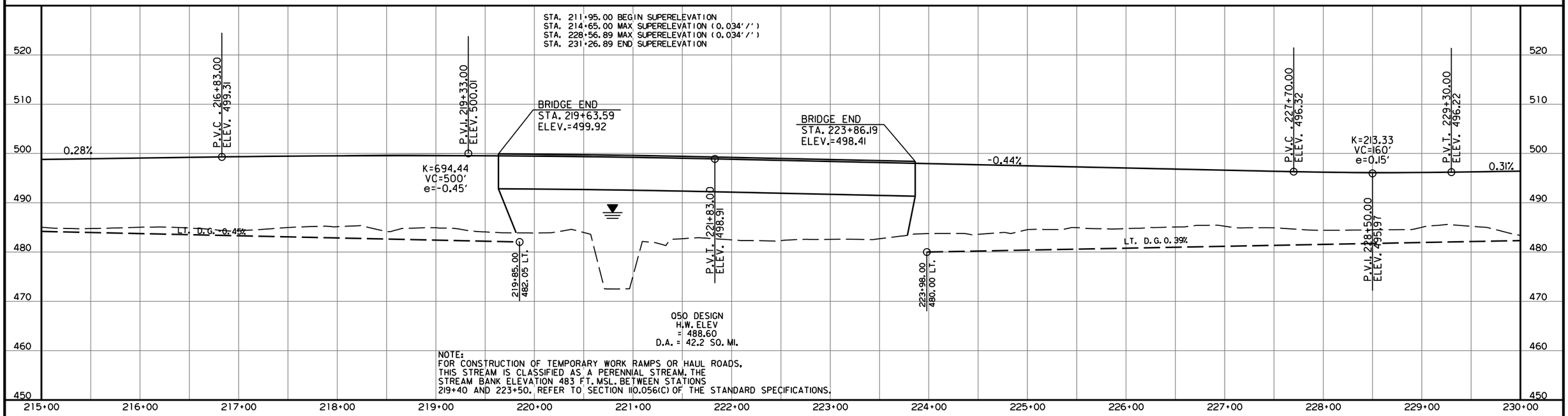

REFER TO SURVEY CONTROL DETAIL SHEETS FOR HORIZONTAL AND VERTICAL CONTROL DATA.

RIGHT SIDE OF HWY. 10

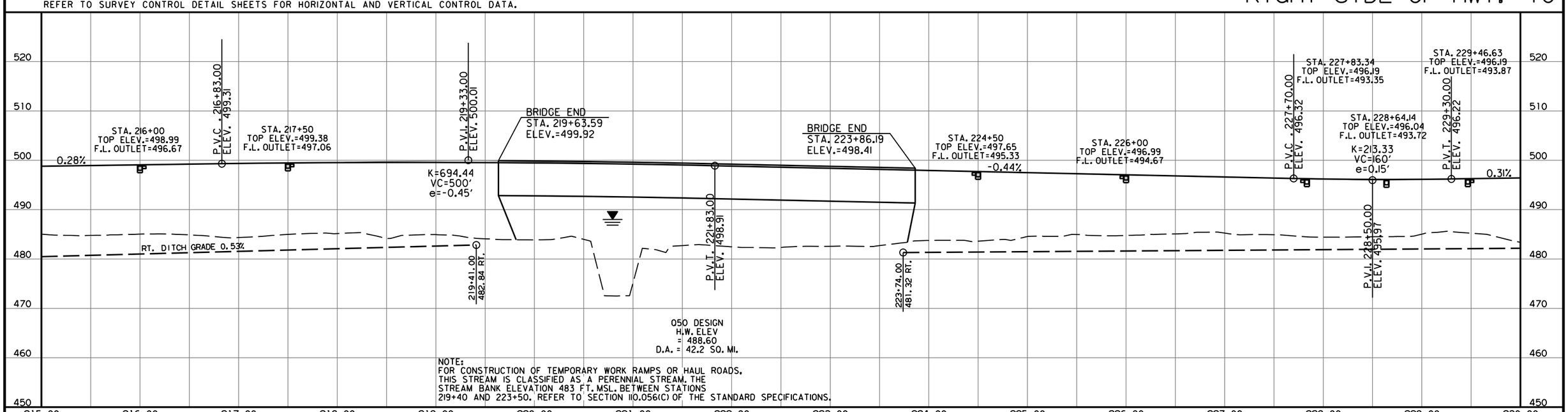

DATE REVISED	DATE REVISED	FED.RD. DIST.NO.	STATE	JOB NO.	SHEET NO.	TOTAL SHEETS
10-24-2023		6	ARK.	040861	106	291
		PLAN AND PROFILE SHEETS				

STATE OF ARKANSAS
LICENSED PROFESSIONAL ENGINEER
No. 11425
TRINITY D. SMITH
10-25-2023

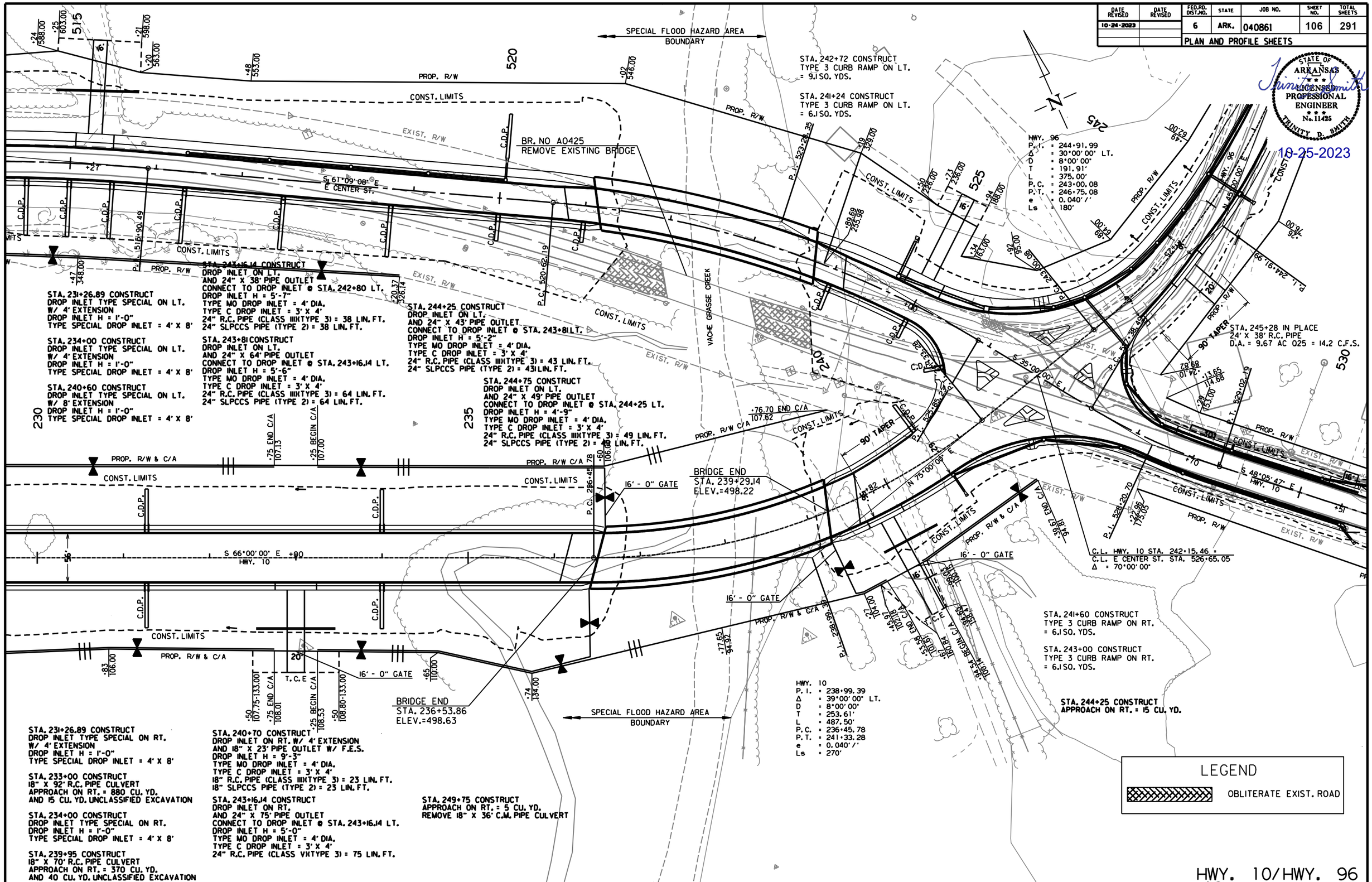

HWY. 10/HWY. 96

11/1/2021
oh40219
R040861.DGN

DATE REVISED	DATE REVISED	FED.RD. DIST.NO.	STATE	JOB NO.	SHEET NO.	TOTAL SHEETS
		6	ARK.	040861	107	291
		PLAN AND PROFILE SHEETS				

STATE OF ARKANSAS
LICENSED PROFESSIONAL ENGINEER
No. 11425
TRINITY D. SMITH

09-27-2023

LEFT SIDE OF HWY. 10/HWY. 96

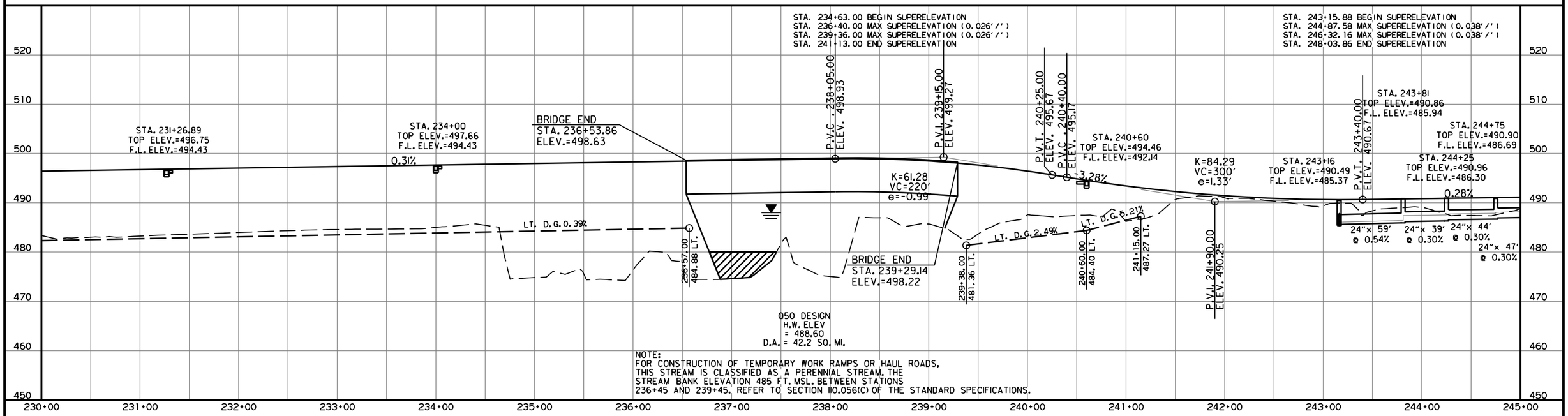

REFER TO SURVEY CONTROL DETAIL SHEETS FOR HORIZONTAL AND VERTICAL CONTROL DATA.

RIGHT SIDE OF HWY. 10/HWY. 96

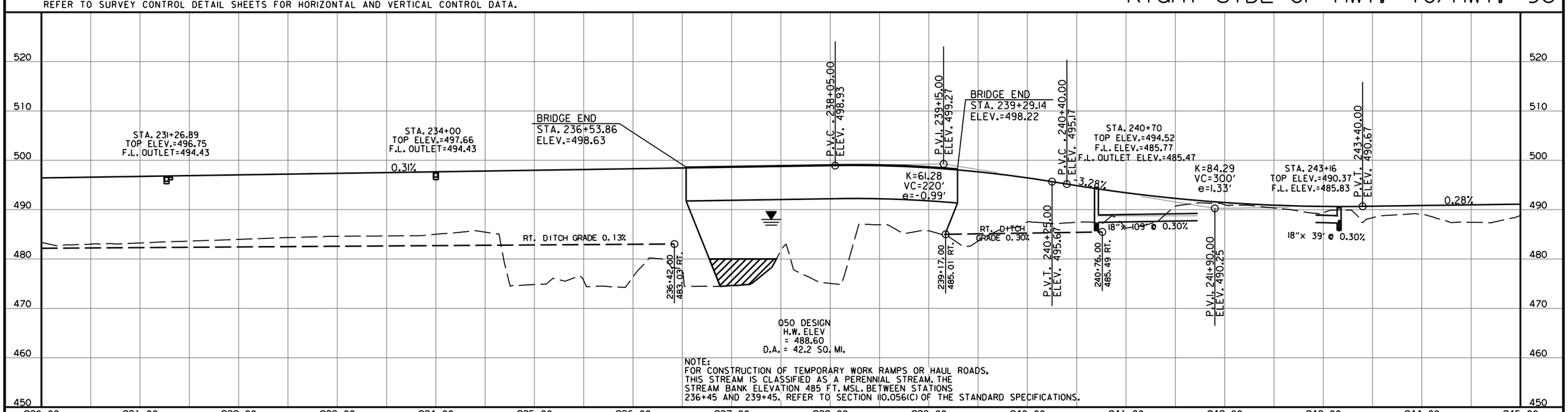

DATE REVISED	DATE REVISED	FED.RD. DIST.NO.	STATE	JOB NO.	SHEET NO.	TOTAL SHEETS
		6	ARK.	040861	108	291
		PLAN AND PROFILE SHEETS				

STATE OF ARKANSAS
LICENSED PROFESSIONAL ENGINEER
No. 11425
TRINITY D. SMITH
09-27-2023

STA. 245+28 CONSTRUCT
DROP INLET ON LT.
AND 24" X 47' PIPE OUTLET
CONNECT TO DROP INLET @ STA. 244+75 LT.
DROP INLET H = 2'-9"
TYPE MO DROP INLET = 4' DIA.
TYPE C DROP INLET = 3' X 4'
24" R.C. PIPE (CLASS V)(TYPE 3) = 47 LIN. FT.
24" R.C. PIPE (CLASS III)(TYPE 3) = 47 LIN. FT.
24" SLPCCS PIPE (TYPE 2) = 47 LIN. FT.

STA. 246+25 CONSTRUCT
DROP INLET ON LT. W/ 4' EXTENSION
AND 18" X 94' PIPE OUTLET
CONNECT TO DROP INLET @ STA. 245+28 LT.
DROP INLET H = 4'-2"
TYPE MO DROP INLET = 4' DIA.
TYPE C DROP INLET = 3' X 4'
18" R.C. PIPE (CLASS III)(TYPE 3) = 94 LIN. FT.
18" SLPCCS PIPE (TYPE 2) = 94 LIN. FT.

STA. 246+75 CONSTRUCT
DROP INLET ON LT. W/ 4' EXTENSION
AND 18" X 190' PIPE OUTLET
CONNECT TO DROP INLET @ STA. 248+65 LT.
DROP INLET H = 3'-5"
TYPE MO DROP INLET = 4' DIA.
TYPE C DROP INLET = 3' X 4'
18" R.C. PIPE (CLASS III)(TYPE 3) = 190 LIN. FT.
18" SLPCCS PIPE (TYPE 2) = 190 LIN. FT.

STA. 247+16 CONSTRUCT
APPROACH ON LT. = 5 CU. YD.
REMOVE 18" X 49' C.M. PIPE CULVERT

STA. 248+65 CONSTRUCT
DROP INLET ON LT. W/ 8' EXTENSION
AND 18" X 19' PIPE OUTLET W/ F.E.S.
DROP INLET H = 3'-0"
TYPE MO DROP INLET = 4' DIA.
TYPE C DROP INLET = 3' X 4'
18" R.C. PIPE (CLASS III)(TYPE 3) = 19 LIN. FT.
18" SLPCCS PIPE (TYPE 2) = 19 LIN. FT.

STA. 249+00.00
END JOB 040861

HWY. 96
P. I. = 244+91.99
Δ = 30°00'00" LT.
D = 8°00'00"
T = 191.91'
L = 375.00'
P. C. = 243+00.08
P. T. = 246+75.08
e = 0.038'/'
Ls = 171.70'

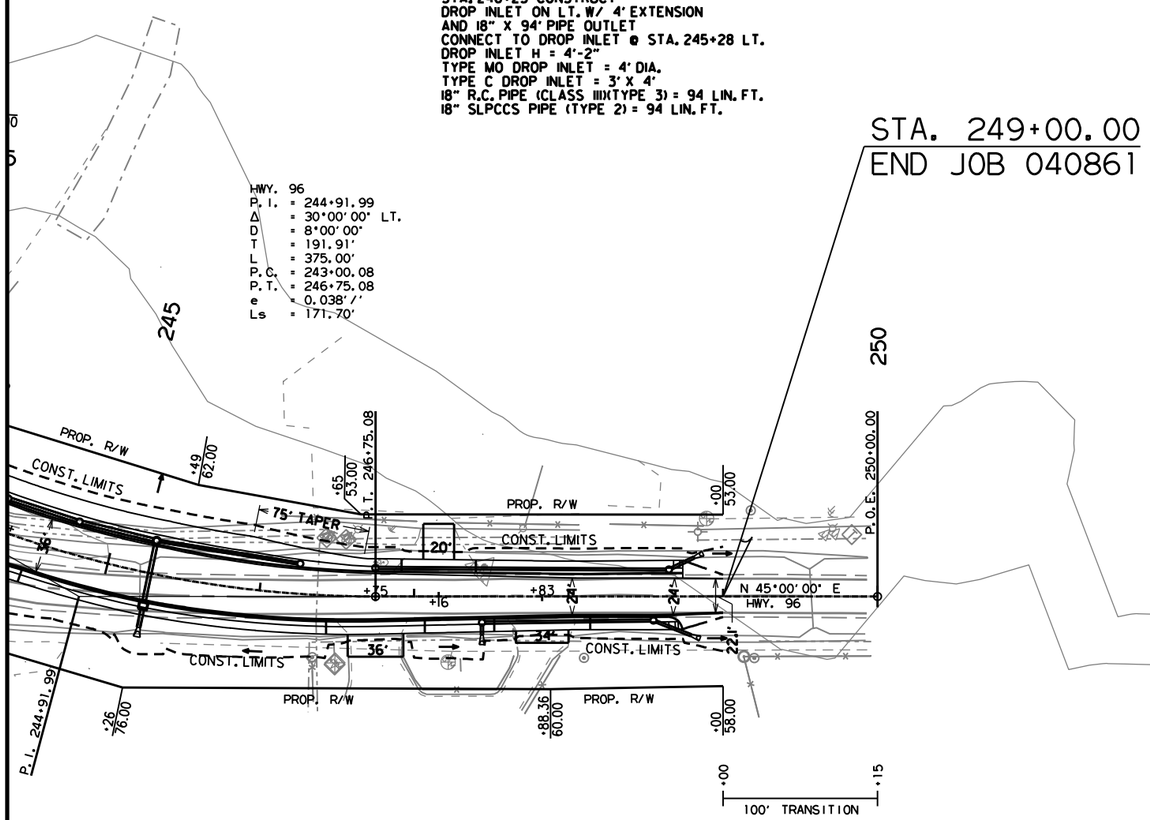

STA. 245+28 CONSTRUCT
JUNCTION BOX ON RT.
AND 24" X 12' STUB INLET W/ F.E.S.
AND 24" X 39' PIPE OUTLET
JUNCTION BOX H = 5'-5"
TYPE E JUNCTION BOX = 5' X 4'
24" R.C. PIPE (CLASS V)(TYPE 3) = 51 LIN. FT.
24" R.C. PIPE (CLASS III)(TYPE 3) = 51 LIN. FT.
24" SLPCCS PIPE (TYPE 2) = 51 LIN. FT.
D.A. = 9.67 AC Q25 = 14.2 C.F.S.

STA. 247+44 CONSTRUCT
DROP INLET ON RT.
AND 18" X 8' STUB INLET W/ F.E.S.
AND 18" X 111' PIPE OUTLET
CONNECT TO DROP INLET @ STA. 248+55 RT.
DROP INLET H = 4'-6"
TYPE MO DROP INLET = 4' DIA.
TYPE C DROP INLET = 3' X 4'
18" R.C. PIPE (CLASS III)(TYPE 3) = 119 LIN. FT.
18" SLPCCS PIPE (TYPE 2) = 119 LIN. FT.

STA. 247+83 CONSTRUCT
APPROACH ON RT. = 5 CU. YD.
REMOVE 18" X 35' C.M. PIPE CULVERT

STA. 248+55 CONSTRUCT
DROP INLET ON RT.
AND 18" X 26' PIPE OUTLET W/ F.E.S.
DROP INLET H = 3'-0"
TYPE MO DROP INLET = 4' DIA.
TYPE C DROP INLET = 3' X 4'
18" R.C. PIPE (CLASS III)(TYPE 3) = 26 LIN. FT.
18" SLPCCS PIPE (TYPE 2) = 26 LIN. FT.

LEGEND

OBLITERATE EXIST. ROAD

qh40219 11/1/2021
RD40861.DGN

DATE REVISED	DATE REVISED	FED.RD. DIST.NO.	STATE	JOB NO.	SHEET NO.	TOTAL SHEETS
		6	ARK.	040861	109	291
		PLAN AND PROFILE SHEETS				

STATE OF ARKANSAS
LICENSED PROFESSIONAL ENGINEER
No. 11425
TRINITY D. SMITH

09-27-2023

LEFT SIDE OF HWY. 96

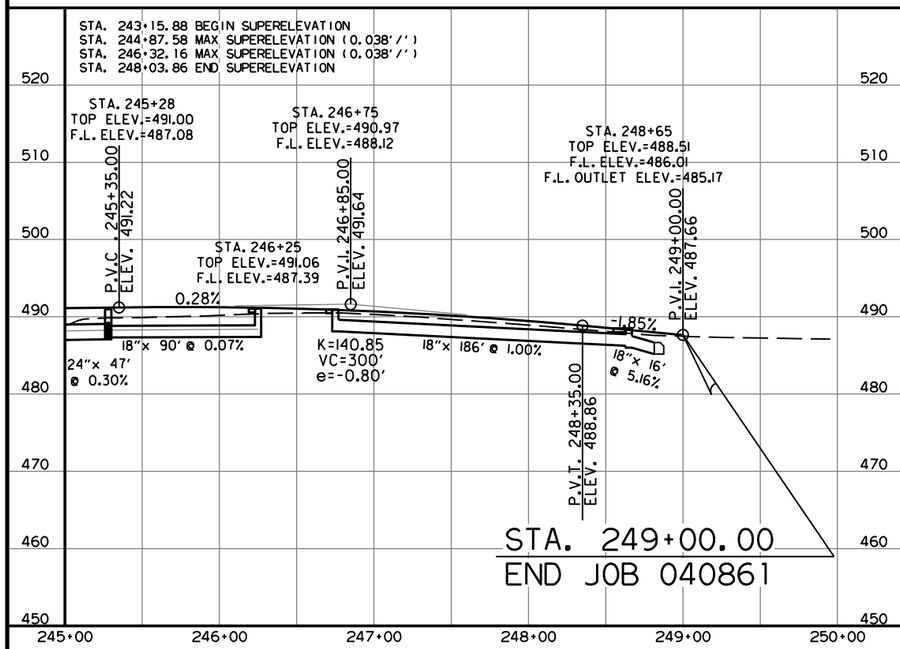

REFER TO SURVEY CONTROL DETAIL SHEETS FOR HORIZONTAL AND VERTICAL CONTROL DATA.

RIGHT SIDE OF HWY. 96

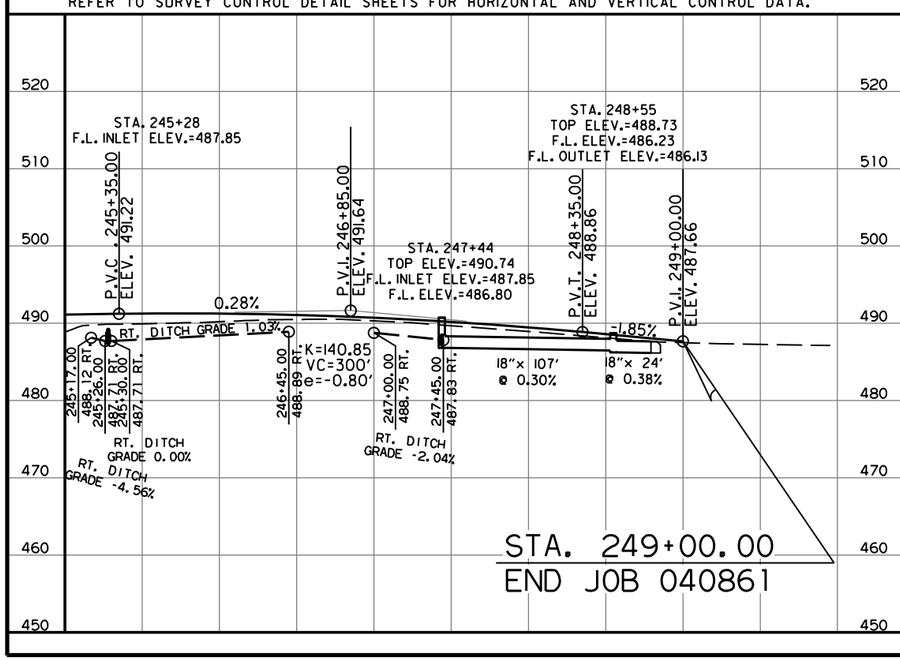

DATE REVISED	DATE REVISED	FED.RD. DIST.NO.	STATE	JOB NO.	SHEET NO.	TOTAL SHEETS
10-24-2023		6	ARK.	040861	110	291
		PLAN AND PROFILE SHEETS				

STATE OF ARKANSAS
LICENSED PROFESSIONAL ENGINEER
No. 11425
TRINITY D. SMITH

10-25-2023

STA. 500+54 CONSTRUCT
APPROACH ON LT. = 5 CU. YD.

STA. 501+10 CONSTRUCT
DROP INLET ON LT. W/ 4' EXTENSION
AND 18" X 41' PIPE OUTLET
CONNECT TO DROP INLET @ STA. 501+50.80 LT.
DROP INLET H = 2'-9"
TYPE MO DROP INLET = 4' DIA.
TYPE C DROP INLET = 3' X 4'
18" R.C. PIPE (CLASS IIIXTYPE 3) = 41 LIN. FT.
18" SLPCCS PIPE (TYPE 2) = 41 LIN. FT.

STA. 501+50.80 CONSTRUCT
DROP INLET ON LT.
AND 18" X 130' PIPE OUTLET
CONNECT TO DROP INLET @ STA. 502+80 LT.
DROP INLET H = 3'-0"
TYPE MO DROP INLET = 4' DIA.
TYPE C DROP INLET = 3' X 4'
18" R.C. PIPE (CLASS IIIXTYPE 3) = 130 LIN. FT.
18" SLPCCS PIPE (TYPE 2) = 130 LIN. FT.

STA. 502+33 CONSTRUCT
APPROACH ON LT. = 70 CU. YD.

STA. 502+80 CONSTRUCT
DROP INLET ON LT.
AND 18" X 92' PIPE OUTLET
CONNECT TO DROP INLET @ STA. 503+70 LT.
DROP INLET H = 5'-3"
TYPE MO DROP INLET = 4' DIA.
TYPE C DROP INLET = 3' X 4'
18" R.C. PIPE (CLASS IIIXTYPE 3) = 92 LIN. FT.
18" SLPCCS PIPE (TYPE 2) = 92 LIN. FT.

STA. 503+70 CONSTRUCT
DROP INLET ON LT. W/ 4' EXTENSION
AND 18" X 35' PIPE OUTLET W/ F.E.S.
DROP INLET H = 8'-4"
TYPE MO DROP INLET = 4' DIA.
TYPE C DROP INLET = 3' X 4'
18" R.C. PIPE (CLASS IIIXTYPE 3) = 35 LIN. FT.
18" SLPCCS PIPE (TYPE 2) = 35 LIN. FT.

STA. 508+50 CONSTRUCT
DROP INLET ON LT.
AND 18" X 16' PIPE OUTLET W/ F.E.S.
DROP INLET H = 3'-6"
TYPE MO DROP INLET = 4' DIA.
TYPE C DROP INLET = 3' X 4'
18" R.C. PIPE (CLASS IIIXTYPE 3) = 16 LIN. FT.
18" SLPCCS PIPE (TYPE 2) = 16 LIN. FT.

STA. 502+61 CONSTRUCT
TYPE 3 CURB RAMP ON LT.
= 12.8 SQ. YDS.

STA. 501+77 CONSTRUCT
TYPE 3 CURB RAMP ON LT.
= 13.6 SQ. YDS.

BRIDGE NO. A0424 - IN PLACE
217' X 43'-10" CLEAR ROADWAY
REMOVAL OF EXISTING BRIDGE STRUCTURE
(SITE NO. 4) = 1.00 LUMP SUM

SPECIAL FLOOD HAZARD AREA
BOUNDARY

E CENTER ST.
P. I. = 503+46.42
Δ = 9°53'40" RT.
D = 5°00'00"
T = 99.19'
L = 197.89'
P. C. = 502+47.23
P. T. = 504+45.12
NO SUPER

E CENTER ST.
P. I. = 512+69.42
Δ = 16°09'42" RT.
D = 2°30'00"
T = 325.39'
L = 646.46'
P. C. = 509+44.03
P. T. = 515+90.49
e = 0.028'/'
Ls = 180'

100' TRANSITION

BELL RD.

PROP. R/W
CONST. LIMITS
EXIST. R/W
45' TAPER
40'
16'
S 87°12'30" E
E CENTER ST.
S 77°18'50" E
E CENTER ST.
16' - 0" GATE
C.D.P.
T.C.E
BRIDGE END
STA. 504+03.86
ELEV.=496.82
BRIDGE END
STA. 507+51.14
ELEV.=498.59
BRIDGE END
STA. 223+86.19
ELEV.=498.02
P.O.B. 499+00.00
P.C. 502+47.23
P.T. 504+45.12
P.I. 503+46.42
P.I. 512+69.42
P.C. 509+44.03
P.T. 515+90.49
ADAMSON CREEK
HWY. 10
S 66°00'00" E
E CENTER ST.

STA. 500+39 CONSTRUCT
TYPE 3 CURB RAMP ON RT.
= 5.4 SQ. YDS.

STA. 501+50.80 CONSTRUCT
DROP INLET ON RT.
AND 18" X 85' PIPE OUTLET
CONNECT TO DROP INLET @ STA. 502+35 RT.
DROP INLET H = 3'-4"
TYPE MO DROP INLET = 4' DIA.
TYPE C DROP INLET = 3' X 4'
18" R.C. PIPE (CLASS IIIXTYPE 3) = 85 LIN. FT.
18" SLPCCS PIPE (TYPE 2) = 85 LIN. FT.

STA. 501+91 IN PLACE
18" X 116' C.P. PIPE CULVERT
RT. SIDE DRAIN
REMOVE AND CONSTRUCT
APPROACH ON RT. = 35 CU. YD.

STA. 502+35 CONSTRUCT
DROP INLET ON RT.
AND 18" X 133' PIPE OUTLET
CONNECT TO DROP INLET @ STA. 503+70 RT.
DROP INLET H = 4'-6"
TYPE MO DROP INLET = 4' DIA.
TYPE C DROP INLET = 3' X 4'
18" R.C. PIPE (CLASS IIIXTYPE 3) = 133 LIN. FT.
18" SLPCCS PIPE (TYPE 2) = 133 LIN. FT.

STA. 503+70 CONSTRUCT
DROP INLET ON RT.
AND 18" X 25' PIPE OUTLET W/ F.E.S.
CONNECT TO DROP INLET @ STA. 503+70 RT.
DROP INLET H = 8'-4"
TYPE MO DROP INLET = 4' DIA.
TYPE C DROP INLET = 3' X 4'
18" R.C. PIPE (CLASS IIIXTYPE 3) = 25 LIN. FT.
18" SLPCCS PIPE (TYPE 2) = 25 LIN. FT.

STA. 508+50 CONSTRUCT
DROP INLET TYPE SPECIAL ON RT.
DROP INLET H = 1'-0"
TYPE SPECIAL DROP INLET = 4' X 8'

STA. 509+50 CONSTRUCT
DROP INLET TYPE SPECIAL ON RT.
DROP INLET H = 1'-0"
TYPE SPECIAL DROP INLET = 4' X 8'

STA. 510+10 CONSTRUCT
DROP INLET TYPE SPECIAL ON RT.
DROP INLET H = 1'-0"
TYPE SPECIAL DROP INLET = 4' X 8'

STA. 510+42 CONSTRUCT
APPROACH ON RT. = 100 CU. YD.

STA. 511+00 CONSTRUCT
DROP INLET TYPE SPECIAL ON RT.
DROP INLET H = 1'-0"
TYPE SPECIAL DROP INLET = 4' X 8'

STA. 511+50 CONSTRUCT
DROP INLET TYPE SPECIAL ON RT.
DROP INLET H = 1'-0"
TYPE SPECIAL DROP INLET = 4' X 8'

STA. 512+00 CONSTRUCT
DROP INLET TYPE SPECIAL ON RT.
DROP INLET H = 1'-0"
TYPE SPECIAL DROP INLET = 4' X 8'

STA. 512+50 CONSTRUCT
DROP INLET TYPE SPECIAL ON RT.
DROP INLET H = 1'-0"
TYPE SPECIAL DROP INLET = 4' X 8'

STA. 513+50 CONSTRUCT
DROP INLET TYPE SPECIAL ON RT.
DROP INLET H = 1'-0"
TYPE SPECIAL DROP INLET = 4' X 8'

STA. 514+00 CONSTRUCT
DROP INLET TYPE SPECIAL ON RT.
DROP INLET H = 1'-0"
TYPE SPECIAL DROP INLET = 4' X 8'

STA. 514+50 CONSTRUCT
DROP INLET TYPE SPECIAL ON RT.
DROP INLET H = 1'-0"
TYPE SPECIAL DROP INLET = 4' X 8'

STA. 515+00 CONSTRUCT
DROP INLET TYPE SPECIAL ON RT.
DROP INLET H = 1'-0"
TYPE SPECIAL DROP INLET = 4' X 8'

E CENTER STREET
STA. 500+25.00 =
HWY. 10 SECTION 1
L.M. 0.36
END MILL AND INLAY &
BEGIN 3 LANE CURB AND GUTTER

STA. 500+50 CONSTRUCT
DROP INLET ON RT. W/ 4' EXTENSION
AND 18" X 60' PIPE OUTLET
CONNECT TO DROP INLET @ STA. 501+10 RT.
DROP INLET H = 3'-4"
TYPE MO DROP INLET = 4' DIA.
TYPE C DROP INLET = 3' X 4'
18" R.C. PIPE (CLASS IIIXTYPE 3) = 60 LIN. FT.
18" SLPCCS PIPE (TYPE 2) = 60 LIN. FT.

STA. 501+10 CONSTRUCT
DROP INLET ON RT.
AND 18" X 41' PIPE OUTLET
CONNECT TO DROP INLET @ STA. 501+50.80 RT.
DROP INLET H = 3'-0"
TYPE MO DROP INLET = 4' DIA.
TYPE C DROP INLET = 3' X 4'
18" R.C. PIPE (CLASS IIIXTYPE 3) = 41 LIN. FT.
18" SLPCCS PIPE (TYPE 2) = 41 LIN. FT.

11/1/2021
oh40219
R040861.DGN

DATE REVISED	DATE REVISED	FED.RD. DIST.NO.	STATE	JOB NO.	SHEET NO.	TOTAL SHEETS
		6	ARK.	040861	111	291
		PLAN AND PROFILE SHEETS				

STATE OF ARKANSAS
LICENSED PROFESSIONAL ENGINEER
No. 11425
TRINITY D. SMITH
09-27-2023

LEFT SIDE OF E CENTER ST.

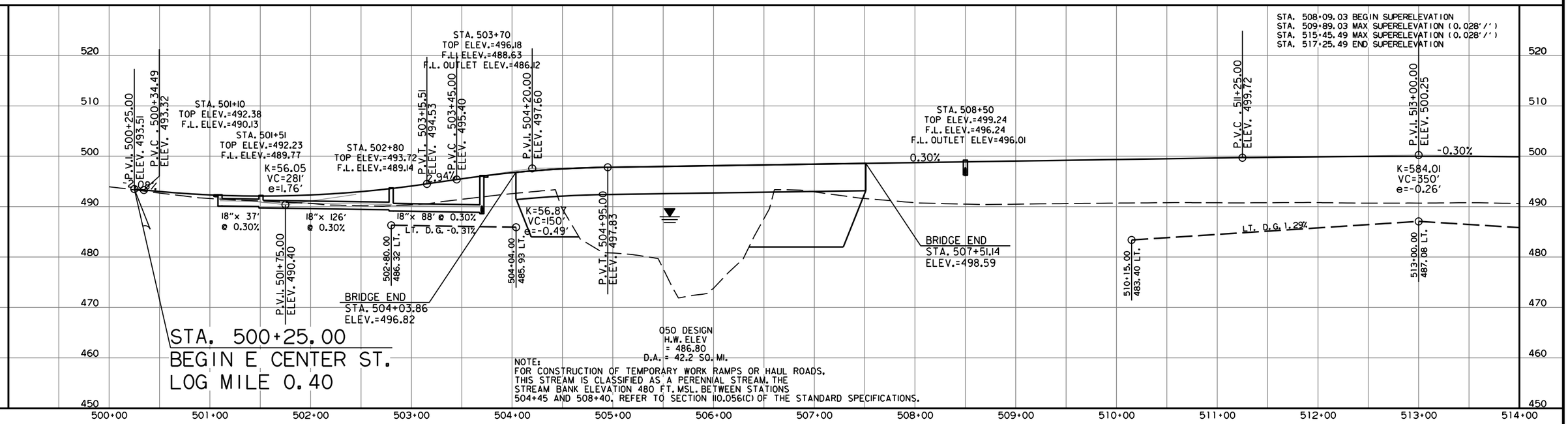

REFER TO SURVEY CONTROL DETAIL SHEETS FOR HORIZONTAL AND VERTICAL CONTROL DATA.

RIGHT SIDE OF E CENTER ST.

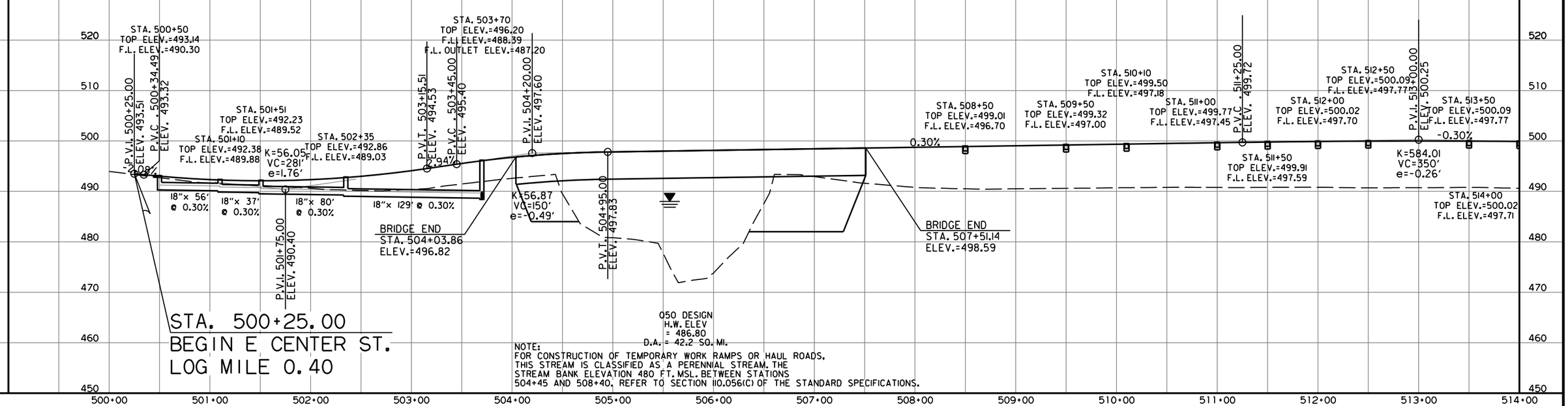

DATE REVISED	DATE REVISED	FED.RD. DIST.NO.	STATE	JOB NO.	SHEET NO.	TOTAL SHEETS
		6	ARK.	040861	112	291
		PLAN AND PROFILE SHEETS				

STA. 515+27 CONSTRUCT
18" X 96' SIDE DRAIN
APPROACH ON LT.= 895 CU. YD.
AND 45 CU. YD. UNCLASSIFIED EXCAVATION

STA. 516+35 CONSTRUCT
DROP INLET ON LT.
AND 18" X 95' PIPE OUTLET
CONNECT TO DROP INLET @ STA. 517+30 LT.
DROP INLET H = 3'-6"
TYPE MO DROP INLET = 4' DIA.
TYPE C DROP INLET = 3' X 4'
18" R.C. PIPE (CLASS III(TYPE 3) = 95 LIN. FT.
18" SLPCCS PIPE (TYPE 2) = 95 LIN. FT.

STA. 517+30 CONSTRUCT
DROP INLET ON LT.
AND 18" X 95' PIPE OUTLET
CONNECT TO DROP INLET @ STA. 518+25 LT.
DROP INLET H = 3'-4"
TYPE MO DROP INLET = 4' DIA.
TYPE C DROP INLET = 3' X 4'
18" R.C. PIPE (CLASS III(TYPE 3) = 95 LIN. FT.
18" SLPCCS PIPE (TYPE 2) = 95 LIN. FT.

STA. 518+25 CONSTRUCT
DROP INLET ON LT.
AND 18" X 90' PIPE OUTLET
CONNECT TO DROP INLET @ STA. 519+15 LT.
DROP INLET H = 3'-6"
TYPE MO DROP INLET = 4' DIA.
TYPE C DROP INLET = 3' X 4'
18" R.C. PIPE (CLASS III(TYPE 3) = 45 LIN. FT.
18" SLPCCS PIPE (TYPE 2) = 45 LIN. FT.

STA. 519+15 CONSTRUCT
DROP INLET ON LT.
AND 18" X 90' PIPE OUTLET
CONNECT TO DROP INLET @ STA. 520+05 LT.
DROP INLET H = 3'-9"
TYPE MO DROP INLET = 4' DIA.
TYPE C DROP INLET = 3' X 4'
18" R.C. PIPE (CLASS III(TYPE 3) = 90 LIN. FT.
18" SLPCCS PIPE (TYPE 2) = 90 LIN. FT.

STA. 520+05 CONSTRUCT
DROP INLET ON LT.
AND 18" X 20' PIPE OUTLET W/ F.E.S.
DROP INLET H = 4'-7"
TYPE MO DROP INLET = 4' DIA.
TYPE C DROP INLET = 3' X 4'
18" R.C. PIPE (CLASS III(TYPE 3) = 20 LIN. FT.
18" SLPCCS PIPE (TYPE 2) = 20 LIN. FT.

STA. 524+70 CONSTRUCT
DROP INLET ON LT.
AND 30" X 45' PIPE OUTLET W/ F.E.S.
DROP INLET H = 12'-0"
TYPE MO DROP INLET = 5' DIA.
TYPE C DROP INLET = 3' X 4'
30" R.C. PIPE (CLASS III(TYPE 3) = 45 LIN. FT.
30" SLPCCS PIPE (TYPE 2) = 45 LIN. FT.

STA. 525+00 CONSTRUCT
APPROACH ON LT.= 215 CU. YD.

STA. 525+75 CONSTRUCT
JUNCTION BOX ON LT.
AND 30" X 109' PIPE OUTLET
CONNECT TO DROP INLET @ STA. 524+70 LT.
JUNCTION BOX H = 8'-3"
TYPE E DROP INLET = 6' X 6'
30" R.C. PIPE (CLASS III(TYPE 3) = 109 LIN. FT.
30" SLPCCS PIPE (TYPE 2) = 109 LIN. FT.

STA. 527+60 CONSTRUCT
DROP INLET ON LT.
AND 18" X 43' PIPE OUTLET
CONNECT TO DROP INLET @ STA. 243+16.14 RT.
DROP INLET H = 3'-9"
TYPE MO DROP INLET = 4' DIA.
TYPE C DROP INLET = 3' X 4'
18" R.C. PIPE (CLASS III(TYPE 3) = 43 LIN. FT.
18" SLPCCS PIPE (TYPE 2) = 43 LIN. FT.

STA. 528+21 CONSTRUCT
DROP INLET ON LT.
AND 18" X 63' PIPE OUTLET
CONNECT TO DROP INLET @ STA. 527+60 LT.
DROP INLET H = 3'-9"
TYPE MO DROP INLET = 4' DIA.
TYPE C DROP INLET = 3' X 4'
18" R.C. PIPE (CLASS III(TYPE 3) = 63 LIN. FT.
18" SLPCCS PIPE (TYPE 2) = 63 LIN. FT.

STA. 529+10 CONSTRUCT
DROP INLET ON LT. W/ BACK OPENING
AND 18" X 87' PIPE OUTLET
CONNECT TO DROP INLET @ STA. 528+21 LT.
DROP INLET H = 3'-2"
TYPE MO DROP INLET = 4' DIA.
TYPE C DROP INLET = 3' X 4'
18" R.C. PIPE (CLASS III(TYPE 3) = 87 LIN. FT.
18" SLPCCS PIPE (TYPE 2) = 87 LIN. FT.

BRIDGE NO. A0425 - IN PLACE
108' X 43'-10" CLEAR ROADWAY
REMOVAL OF EXISTING BRIDGE STRUCTURE
(SITE NO. 5) = 1.00 LUMP SUM

STATE OF ARKANSAS
LICENSED PROFESSIONAL ENGINEER
No. 11425
TRINITY D. SMITH
09-27-2023

LEGEND
OBLITERATE EXIST. ROAD

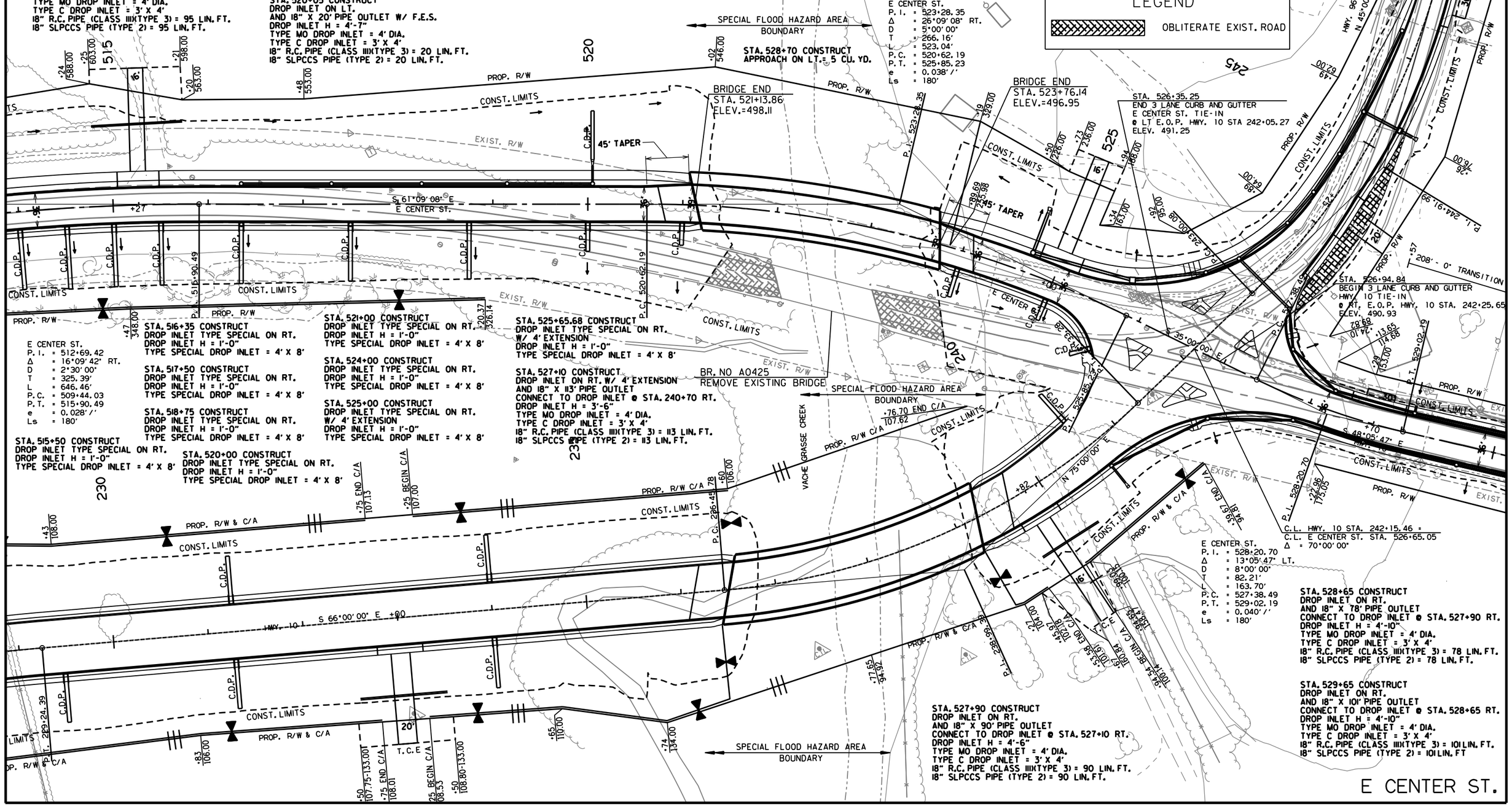

11/1/2021

ah40219
R040861.DGN

DATE REVISED	DATE REVISED	FED.RD. DIST.NO.	STATE	JOB NO.	SHEET NO.	TOTAL SHEETS
		6	ARK.	040861	113	291
		PLAN AND PROFILE SHEETS				

STATE OF ARKANSAS
LICENSED PROFESSIONAL ENGINEER
No. 11425
TRINITY D. SMITH

09-27-2023

LEFT SIDE OF E CENTER ST.

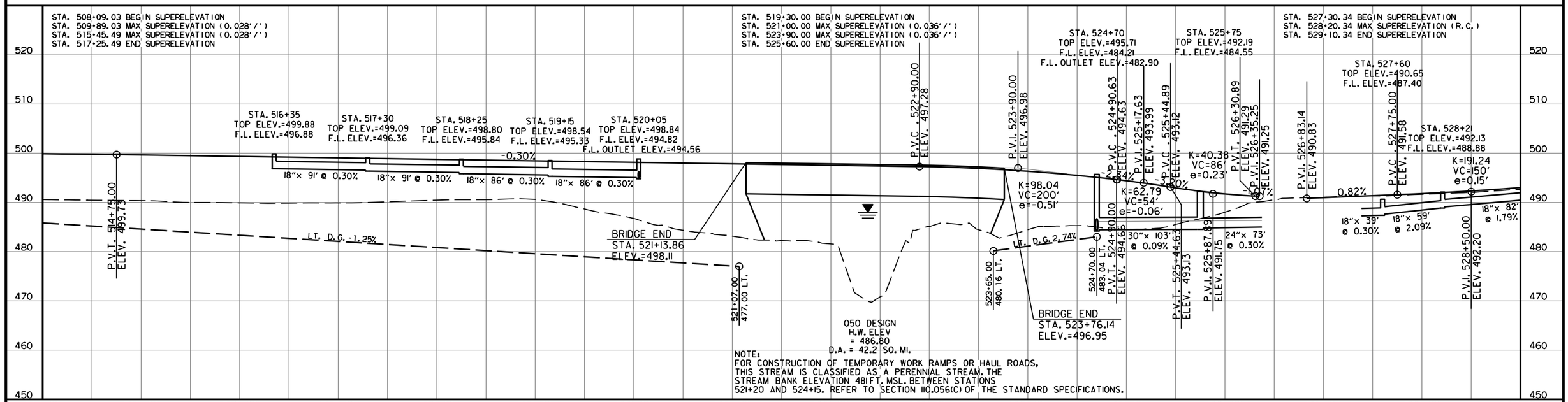

REFER TO SURVEY CONTROL DETAIL SHEETS FOR HORIZONTAL AND VERTICAL CONTROL DATA.

RIGHT SIDE OF E CENTER ST.

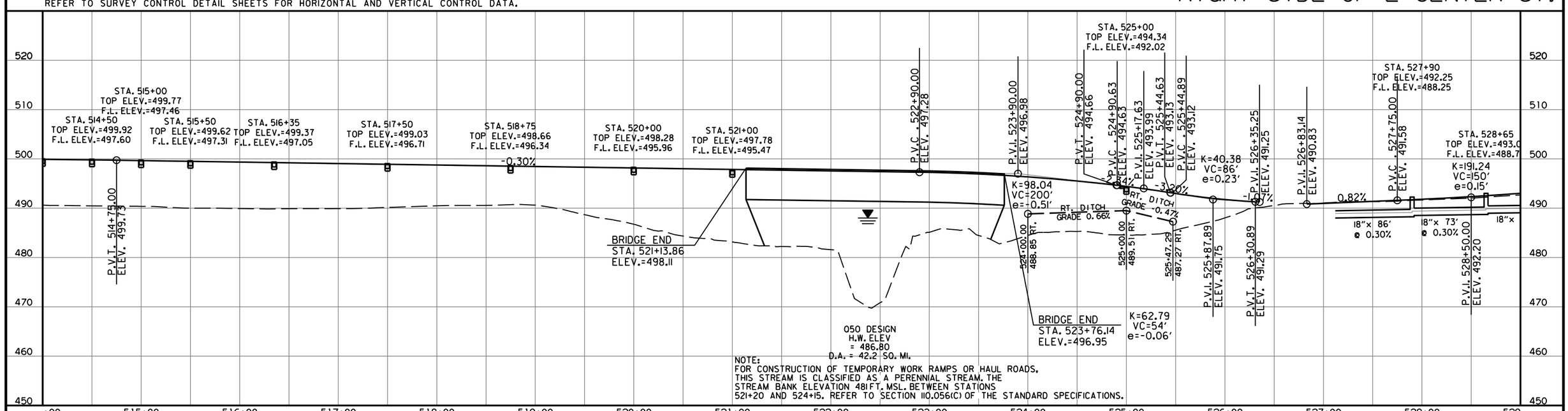

oh40219 11/1/2021
R040861.DGN

DATE REVISED	DATE REVISED	FED.RD. DIST.NO.	STATE	JOB NO.	SHEET NO.	TOTAL SHEETS
10-24-2023		6	ARK.	040861	114	291
		PLAN AND PROFILE SHEETS				

STATE OF ARKANSAS
LICENSED PROFESSIONAL ENGINEER
No. 11425
TRINITY D. SMITH

10-25-2023

STA. 530+20 CONSTRUCT
DROP INLET ON LT.
CONNECT 18" X 71' PIPE INLET W/ F.E.S.
AND 18" X 110' PIPE OUTLET
CONNECT TO DROP INLET @ STA. 529+10 LT.
DROP INLET H = 4'-6"
TYPE MO DROP INLET = 4' DIA.
TYPE C DROP INLET = 3' X 4'
18" R.C. PIPE (CLASS III)(TYPE 3) = 181 LIN. FT.
18" SLPCCS PIPE (TYPE 2) = 181 LIN. FT.

STA. 530+51 CONSTRUCT
APPROACH ON LT. = 5 CU. YD.

STA. 532+95 CONSTRUCT
APPROACH ON LT. = 5 CU. YD.

STA. 532+14 CONSTRUCT
APPROACH ON LT. = 20 CU. YD.

E CENTER ST.
P.I. = 528+20.70
Δ = 13°05'47" LT.
D = 8°00'00"
T = 82.21'
L = 163.70'
P.C. = 527+38.49
P.T. = 529+02.19
e = 0.040'/'
Ls = 180'

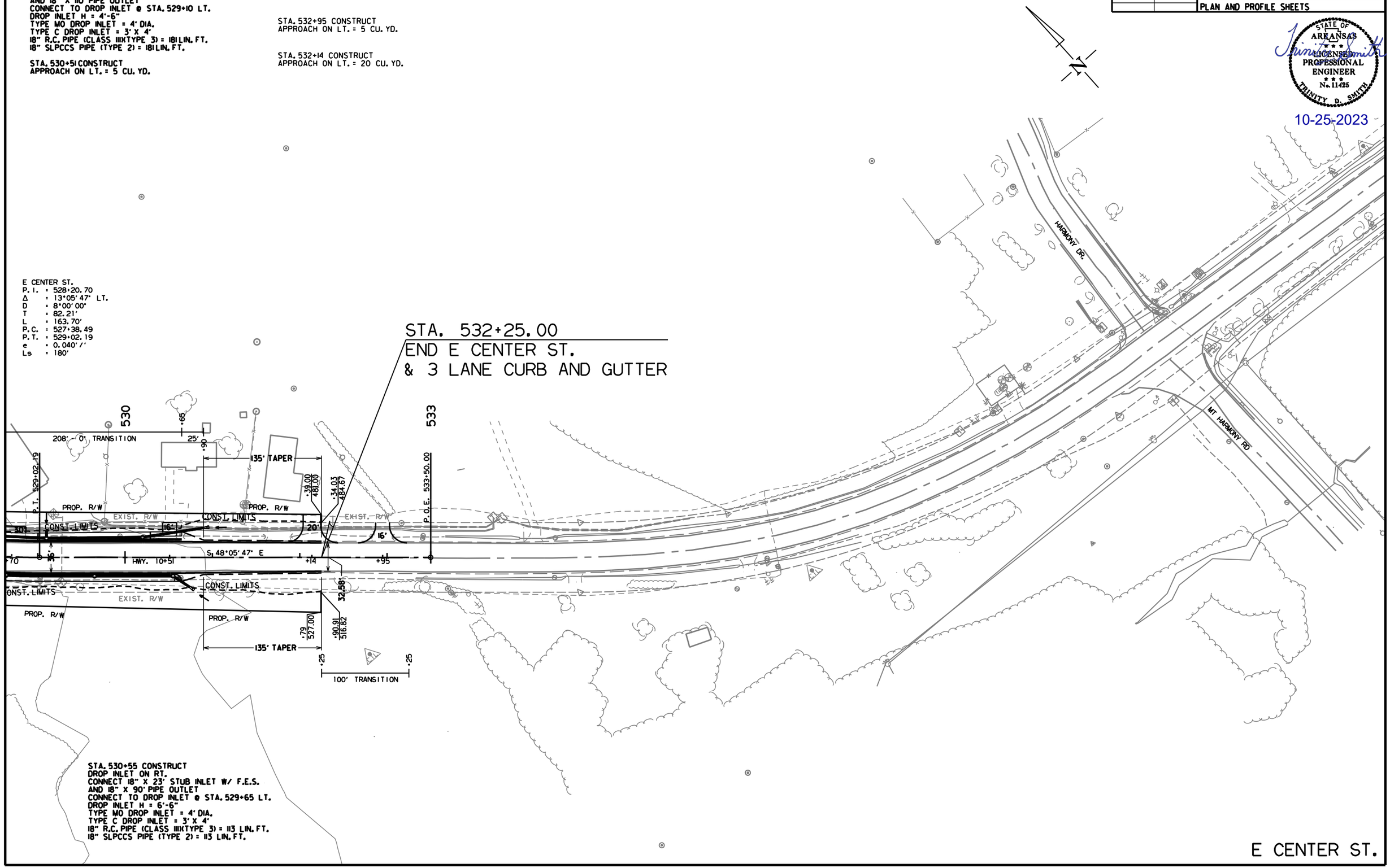

STA. 530+55 CONSTRUCT
DROP INLET ON RT.
CONNECT 18" X 23' STUB INLET W/ F.E.S.
AND 18" X 90' PIPE OUTLET
CONNECT TO DROP INLET @ STA. 529+65 LT.
DROP INLET H = 6'-6"
TYPE MO DROP INLET = 4' DIA.
TYPE C DROP INLET = 3' X 4'
18" R.C. PIPE (CLASS III)(TYPE 3) = 113 LIN. FT.
18" SLPCCS PIPE (TYPE 2) = 113 LIN. FT.

E CENTER ST.

gh40219 11/1/2021
R040861.DGN

DATE REVISED	DATE REVISED	FED.RD. DIST.NO.	STATE	JOB NO.	SHEET NO.	TOTAL SHEETS
		6	ARK.	040861	115	291
		PLAN AND PROFILE SHEETS				

STATE OF ARKANSAS
LICENSED PROFESSIONAL ENGINEER
No. 11425
TRINITY D. SMITH

09-27-2023

LEFT SIDE OF E CENTER ST.

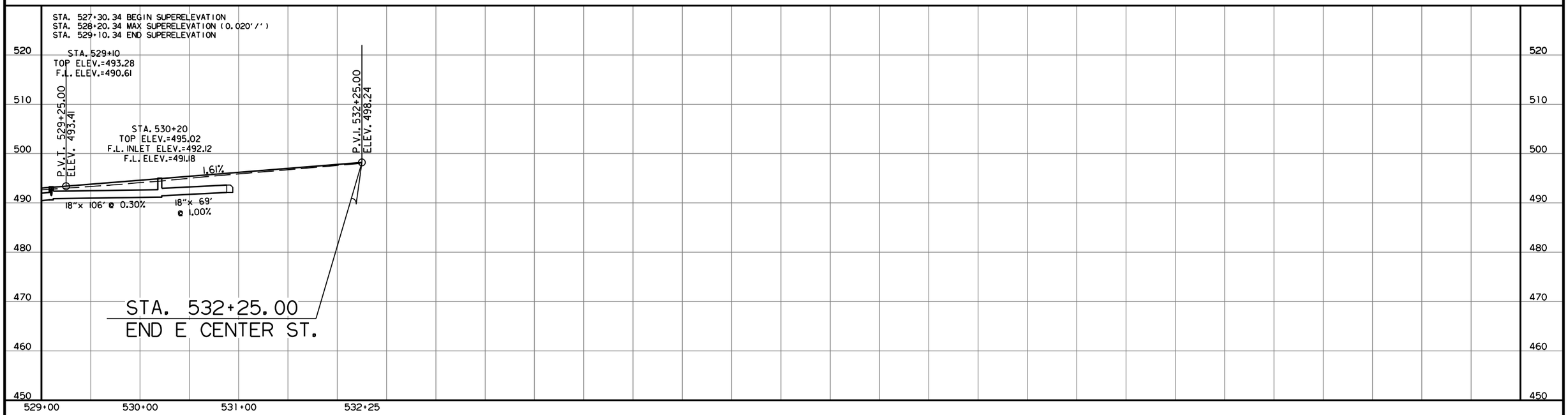

REFER TO SURVEY CONTROL DETAIL SHEETS FOR HORIZONTAL AND VERTICAL CONTROL DATA.

RIGHT SIDE OF E CENTER ST.

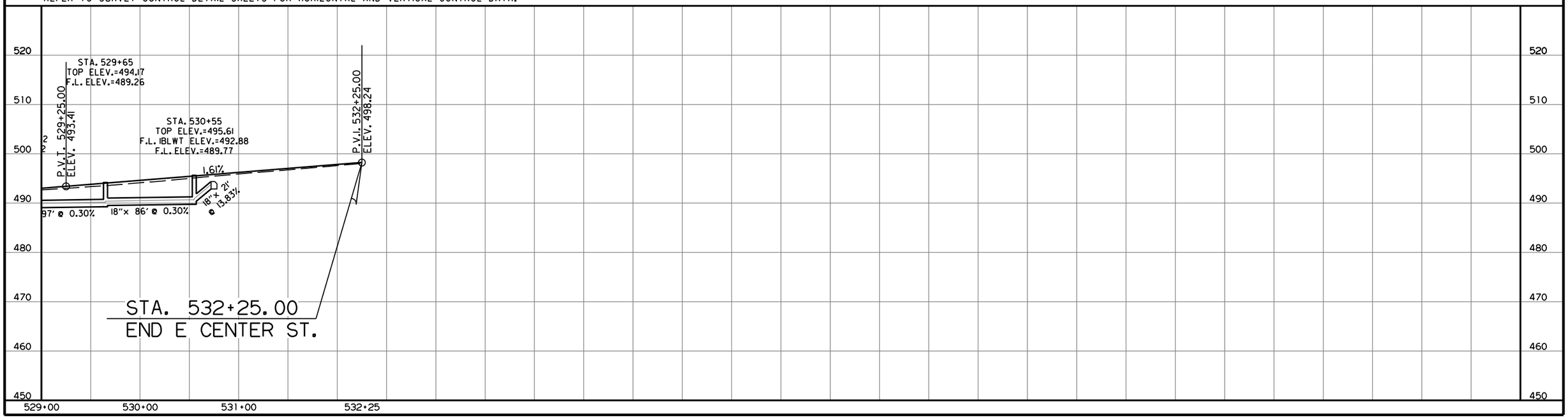

11/1/2021
ah40219
R040861.DGN

DATE REVISED	DATE REVISED	FED.RD. DIST.NO.	STATE	JOB NO.	SHEET NO.	TOTAL SHEETS
		6	ARK.	040861	116	291
		PLAN AND PROFILE SHEETS				

STATE OF ARKANSAS
LICENSED PROFESSIONAL ENGINEER
No. 11425
TRINITY D. SMITH
09-27-2023

STA. 400+65 CONSTRUCT
APPROACH ON LT. = 20 CU. YD.

STA. 401+94.72 CONSTRUCT
DROP INLET ON LT.
AND DBL. 44" X 27" X 149' PIPE INLET W/ F.E.S.
AND DBL. 44" X 27" X 149' PIPE OUTLET
CONNECT TO DROP INLET @ STA. 402+99.57 RT.
DROP INLET H = 5'-4"
TYPE C DROP INLET = 26' X 4'
44" X 27" R.C. PIPE (CLASS IV)(TYPE 3) = 298 LIN. FT.
D.A. = 22.97 AC 050 = 58.0 C.F.S.

STA. 403+01 CONSTRUCT
DROP INLET ON LT. W/ 8' EXTENSION
AND 24" X 107' PIPE OUTLET
CONNECT TO DROP INLET @ STA. 401+94.72 LT.
DROP INLET H = 4'-2"
TYPE MO DROP INLET = 4' DIA.
TYPE C DROP INLET = 3' X 4'
24" R.C. PIPE (CLASS III)(TYPE 3) = 107 LIN. FT.
24" SLPCCS PIPE (TYPE 2) = 107 LIN. FT.

STA. 404+00 CONSTRUCT
DROP INLET ON LT. W/ 4' EXTENSION
AND 18" X 20' PIPE INLET W/ F.E.S.
AND 24" X 99' PIPE OUTLET
CONNECT TO DROP INLET @ STA. 403+01 LT.
DROP INLET H = 6'-7"
TYPE MO DROP INLET = 4' DIA.
TYPE C DROP INLET = 3' X 4'
18" R.C. PIPE (CLASS III)(TYPE 3) = 20 LIN. FT.
18" SLPCCS PIPE (TYPE 2) = 20 LIN. FT.
24" R.C. PIPE (CLASS III)(TYPE 3) = 99 LIN. FT.
24" SLPCCS PIPE (TYPE 2) = 99 LIN. FT.

STA. 404+34 CONSTRUCT
JUNCTION BOX ON LT.
AND 18" X 46' PIPE OUTLET
CONNECT TO DROP INLET @ STA. 404+00 LT.
DROP INLET H = 7'-0"
TYPE E JUNCTION BOX = 6' X 6'
24" R.C. PIPE (CLASS III)(TYPE 3) = 46 LIN. FT.
24" SLPCCS PIPE (TYPE 2) = 46 LIN. FT.

STA. 402+69 CONSTRUCT
APPROACH ON LT. = 5 CU. YD.

STA. 404+70.99
END CURB AND GUTTER
S COKER ST. TIE-IN
@ RT E.O.P. HWY. 10 STA 495+84.13
ELEV. 507.12

STA. 407+61 CONSTRUCT
TYPE 3 CURB RAMP ON LT.
= 5.4 SQ. YDS.

STA. 405+81 CONSTRUCT
DROP INLET ON LT. W/ 4' EXTENSION
AND 18" X 119' PIPE OUTLET
CONNECT TO DROP INLET @ STA. 407+00 LT.
DROP INLET H = 3'-6"
TYPE MO DROP INLET = 4' DIA.
18" R.C. PIPE (CLASS III)(TYPE 3) = 119 LIN. FT.
18" SLPCCS PIPE (TYPE 2) = 119 LIN. FT.

STA. 406+10 CONSTRUCT
APPROACH ON LT. = 5 CU. YD.

STA. 407+00 CONSTRUCT
DROP INLET ON LT. W/ 8' EXTENSION
AND BACK OPENING
AND 18" X 71' PIPE OUTLET
CONNECT TO DROP INLET @ STA. 407+72 LT.
DROP INLET H = 3'-0"
TYPE MO DROP INLET = 4' DIA.
18" R.C. PIPE (CLASS III)(TYPE 3) = 71 LIN. FT.
18" SLPCCS PIPE (TYPE 2) = 71 LIN. FT.

STA. 407+33 CONSTRUCT
APPROACH ON LT.
UNCLASSIFIED EXCAVATION= 5 CU. YD.

STA. 407+70 CONSTRUCT
DROP INLET ON LT.
AND 18" X 12' PIPE INLET W/ F.E.S.
AND 18" X 29' PIPE OUTLET
CONNECT TO DROP INLET @ STA. 407+97 LT.
DROP INLET H = 3'-0"
TYPE MO DROP INLET = 4' DIA.
18" R.C. PIPE (CLASS III)(TYPE 3) = 41 LIN. FT.
18" SLPCCS PIPE (TYPE 2) = 41 LIN. FT.

STA. 407+85 CONSTRUCT
APPROACH ON LT.
UNCLASSIFIED EXCAVATION= 5 CU. YD.

STA. 407+97 CONSTRUCT
DROP INLET ON LT.
AND 18" X 12' PIPE INLET W/ F.E.S.
AND 18" X 54' PIPE OUTLET
CONNECT TO DROP INLET @ STA. 408+50 LT.
DROP INLET H = 3'-0"
TYPE MO DROP INLET = 4' DIA.
18" R.C. PIPE (CLASS III)(TYPE 3) = 66 LIN. FT.
18" SLPCCS PIPE (TYPE 2) = 66 LIN. FT.

STA. 408+50 CONSTRUCT
DROP INLET ON LT.
AND BACK OPENING
AND 18" X 15' PIPE OUTLET W/ F.E.S.
DROP INLET H = 3'-2"
TYPE MO DROP INLET = 4' DIA.
18" R.C. PIPE (CLASS III)(TYPE 3) = 41 LIN. FT.
18" SLPCCS PIPE (TYPE 2) = 41 LIN. FT.

STA. 409+09 CONSTRUCT
APPROACH ON LT.
UNCLASSIFIED EXCAVATION= 5 CU. YD.

STA. 408+58 CONSTRUCT
TYPE 3 CURB RAMP ON RT.
= 4.3 SQ. YDS.

STA. 401+00.00
BEGIN S COKER ST.

S COKER ST.
STA. 408+63.00 =
HWY. 10 SECTION 0
L.M. 10.80
BEGIN OVERLAY

C.L. HWY. 10 STA. 195+91.67 =
C.L. E CENTER ST. STA. 405+00.00
Δ = 74°40'47"

STA. 405+29.05
BEGIN CURB AND GUTTER
S COKER ST. TIE-IN
@ LT. E.O.P. HWY. 10 STA. 195+99.84
ELEV. 505.06

P.I. 198+63.27

STA. 401+02 CONSTRUCT
APPROACH ON RT. = 5 CU. YD.

STA. 402+19 CONSTRUCT
APPROACH ON RT. = 15 CU. YD.

STA. 402+99.57 CONSTRUCT
JUNCTION BOX 70' RT.
DROP INLET H = 5'-0"
TYPE E DROP INLET = 4' X 12'

STA. 405+95 CONSTRUCT
JUNCTION BOX ON RT.
AND 18" X 50' PIPE OUTLET
CONNECT TO DROP INLET @ STA. 196+98 LT.
JUNCTION BOX H = 3'-4"
TYPE E JUNCTION BOX = 6' X 6'
18" R.C. PIPE (CLASS III)(TYPE 3) = 50 LIN. FT.
18" SLPCCS PIPE (TYPE 2) = 50 LIN. FT.

STA. 406+45 CONSTRUCT
DROP INLET ON RT. W/ 4' EXTENSION
AND 18" X 53' PIPE OUTLET
CONNECT TO DROP INLET @ STA. 405+95 RT.
DROP INLET H = 7'-0"
TYPE MO DROP INLET = 4' DIA.
18" R.C. PIPE (CLASS III)(TYPE 3) = 53 LIN. FT.
18" SLPCCS PIPE (TYPE 2) = 53 LIN. FT.

STA. 407+03 CONSTRUCT
DROP INLET ON RT. W/ 8' EXTENSION
AND 18" X 58' PIPE OUTLET
CONNECT TO DROP INLET @ STA. 406+45 RT.
DROP INLET H = 5'-0"
TYPE MO DROP INLET = 4' DIA.
18" R.C. PIPE (CLASS III)(TYPE 3) = 58 LIN. FT.
18" SLPCCS PIPE (TYPE 2) = 58 LIN. FT.

STA. 407+35 CONSTRUCT
APPROACH ON RT. = 5 CU. YD.

STA. 407+90 CONSTRUCT
DROP INLET ON RT.
AND 18" X 87' PIPE OUTLET
CONNECT TO DROP INLET @ STA. 407+03 RT.
DROP INLET H = 4'-2"
TYPE MO DROP INLET = 4' DIA.
18" R.C. PIPE (CLASS III)(TYPE 3) = 87 LIN. FT.
18" SLPCCS PIPE (TYPE 2) = 87 LIN. FT.

STA. 408+25 CONSTRUCT
APPROACH ON RT. = 55 CU. YD.

STA. 409+11 CONSTRUCT
APPROACH ON RT. = 5 CU. YD.

S COKER ST.

gh40219 11/1/2021
R040861.DGN

DATE REVISED	DATE REVISED	FED.RD. DIST.NO.	STATE	JOB NO.	SHEET NO.	TOTAL SHEETS
		6	ARK.	040861	117	291
		PLAN AND PROFILE SHEETS				

STATE OF ARKANSAS
LICENSED PROFESSIONAL ENGINEER
No. 11425
TRINITY D. SMITH
09-27-2023

LEFT SIDE OF S COKER ST.

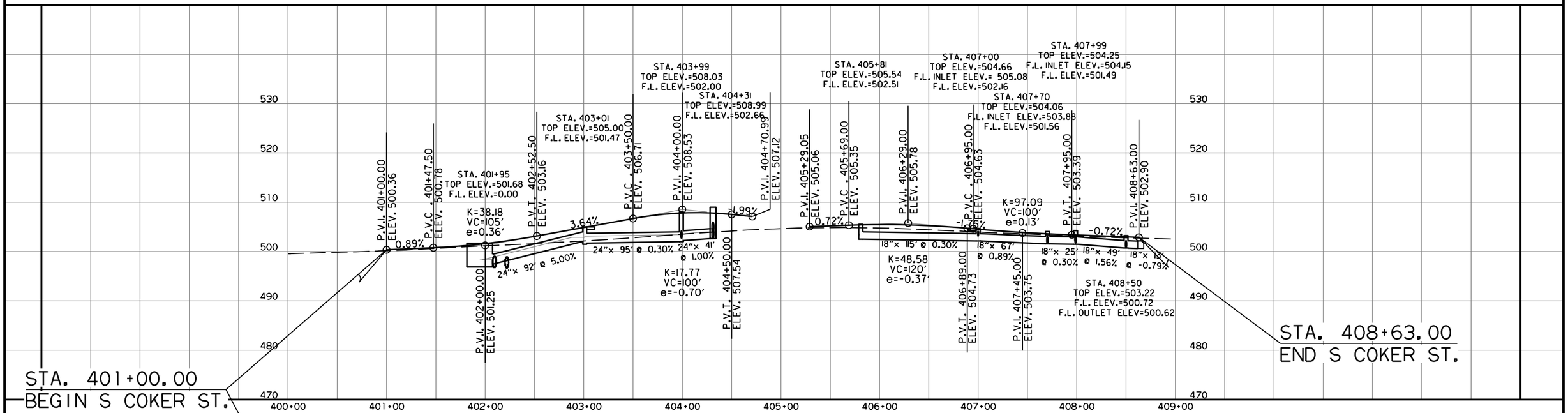

RIGHT SIDE OF S COKER ST.

REFER TO SURVEY CONTROL DETAIL SHEETS FOR HORIZONTAL AND VERTICAL CONTROL DATA.

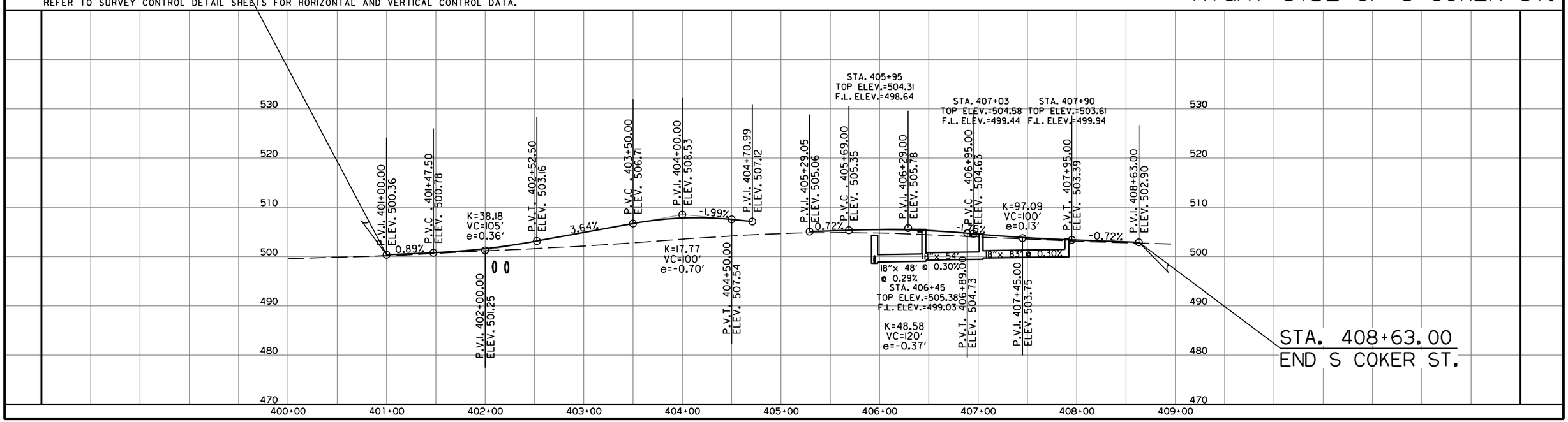

qh40219 11/1/2021
R040861.DGN

DATE REVISED	DATE REVISED	FED.RD. DIST.NO.	STATE	JOB NO.	SHEET NO.	TOTAL SHEETS
		6	ARK.	040861	118	291
		PLAN AND PROFILE SHEETS				

STATE OF ARKANSAS
LICENSED PROFESSIONAL ENGINEER
No. 11425
TRINITY D. SMITH
09-27-2023

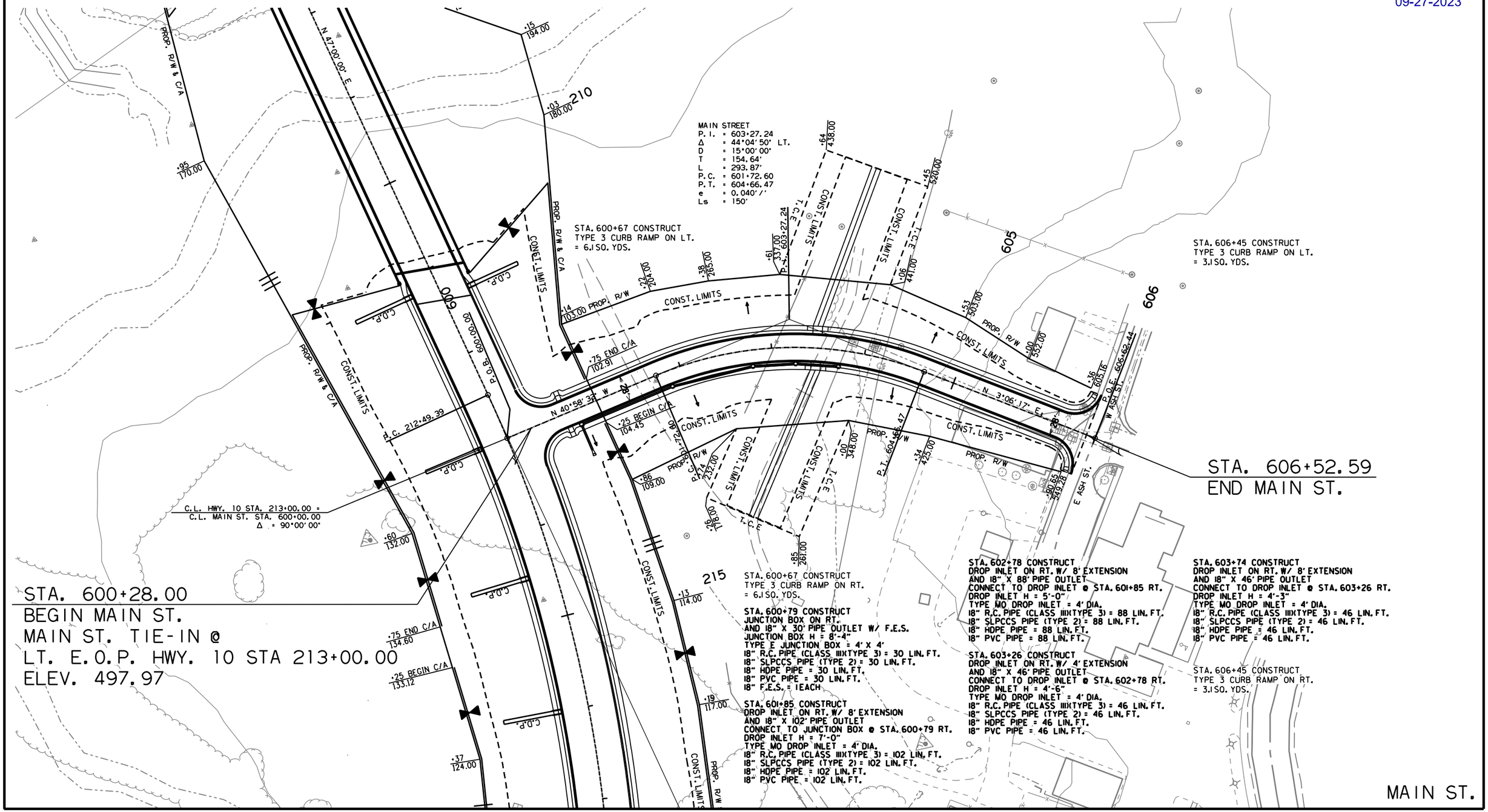

11/1/2021
qh40219
R040861.DGN

DATE REVISED	DATE REVISED	FED.RD. DIST.NO.	STATE	JOB NO.	SHEET NO.	TOTAL SHEETS
		6	ARK.	040861	119	291
		PLAN AND PROFILE SHEETS				

STATE OF ARKANSAS
LICENSED PROFESSIONAL ENGINEER
No. 11425
TRINITY D. SMITH

09-27-2023

LEFT SIDE OF MAIN ST.

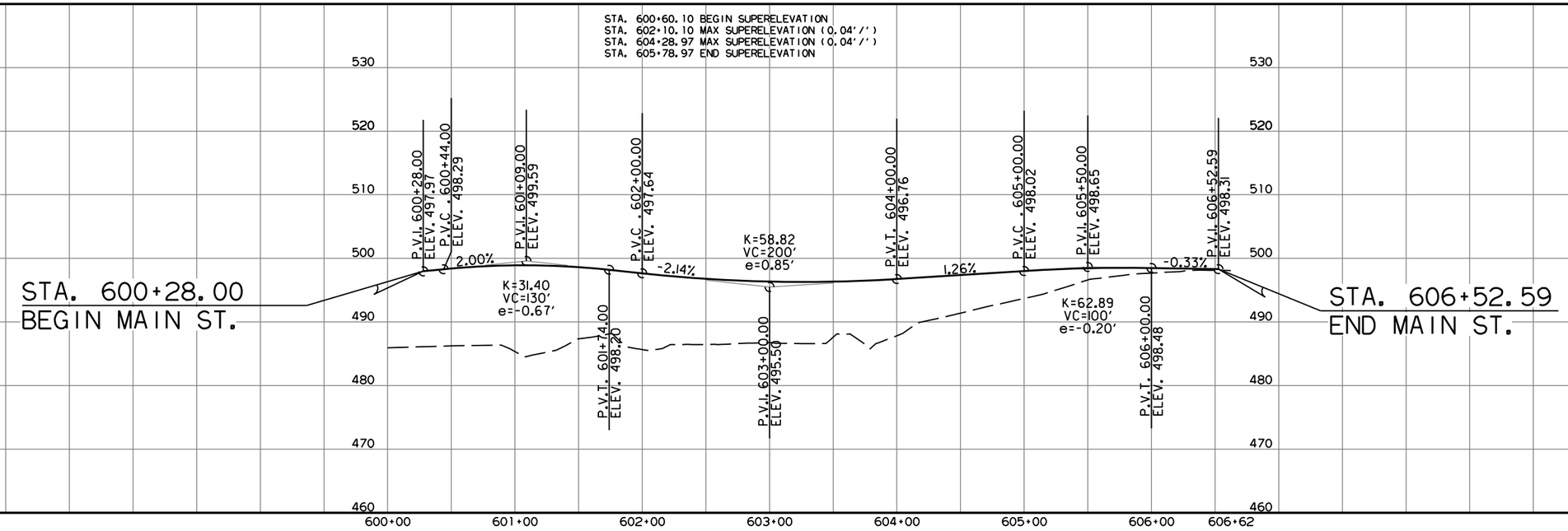

REFER TO SURVEY CONTROL DETAIL SHEETS FOR HORIZONTAL AND VERTICAL CONTROL DATA.

RIGHT SIDE OF MAIN ST.

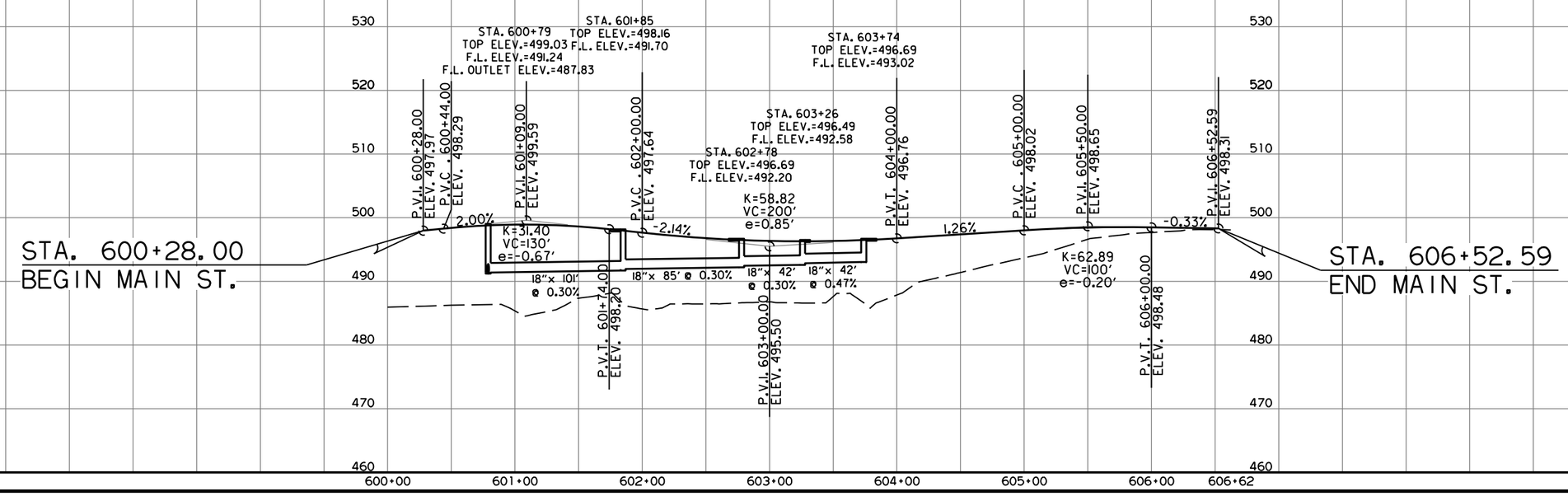

gh40219 11/1/2021
R040861.DGN

STATE OF ARKANSAS LICENSED PROFESSIONAL ENGINEER No. 11425 TRINITY D. SMITH

09-27-2023

SUMMARY OF TRAFFIC SIGNAL QUANTITIES

ITEM NUMBER	ITEM	QUANTITY	UNIT
SP & 701	ACTUATED CONTROLLER TS2-TYPE 2 (8 PHASES)	1	EACH
SP & 706	TRAFFIC SIGNAL HEAD, LED, (3 SECTION, 1 WAY)	12	EACH
SP & 706	TRAFFIC SIGNAL HEAD, LED, (4 SECTION, 1 WAY)	4	EACH
SP & 707	CENTRAL CONTROL UNIT	1	EACH
SP & 707	POLE MOUNTED ASSEMBLY	8	EACH
SP & 707	INFRARED PROGRAMMING DEVICE	1	EACH
SP & 707	COUNTDOWN PEDESTRIAN SIGNAL HEAD, LED	8	EACH
708	TRAFFIC SIGNAL CABLE (5C/12 A.W.G.)	1350	LIN. FT.
708	TRAFFIC SIGNAL CABLE (5C/14 A.W.G.)	1250	LIN. FT.
708	TRAFFIC SIGNAL CABLE (7C/14 A.W.G.)	310	LIN. FT.
708	TRAFFIC SIGNAL CABLE (20C/14 A.W.G.)	660	LIN. FT.
SP	ELECTRICAL CONDUCTORS-IN-CONDUIT (1C/8 A.W.G., E.G.C.)	650	LIN. FT.
SP	ELECTRICAL CONDUCTORS-IN-CONDUIT (1C/12 A.W.G., E.G.C.)	200	LIN. FT.
SP	ELECTRICAL CONDUCTORS-IN-CONDUIT (2C/6 A.W.G.)	50	LIN. FT.
SP	ELECTRICAL CONDUCTORS FOR LUMINAIRES	860	LIN. FT.
709	GALVANIZED STEEL CONDUIT (2")	20	LIN. FT.
710	NON-METALLIC CONDUIT (2")	110	LIN. FT.
710	NON-METALLIC CONDUIT (3")	660	LIN. FT.
SS & 711	CONCRETE PULL BOX (TYPE 2)	5	EACH
SS & 711	CONCRETE PULL BOX (TYPE 2 HD)	1	EACH
SS & 711	CONCRETE PULL BOX (TYPE 3 HD)	1	EACH
SS & 714	TRAFFIC SIGNAL MAST ARM AND POLE WITH FOUNDATION (40')	1	EACH
SS & 714	TRAFFIC SIGNAL MAST ARM AND POLE WITH FOUNDATION (42')	1	EACH
SS & 714	TRAFFIC SIGNAL MAST ARM AND POLE WITH FOUNDATION (56')	2	EACH
SP	LED LUMINAIRE ASSEMBLY	4	EACH
SS & 715	TRAFFIC SIGNAL PEDESTAL POLE WITH FOUNDATION	4	EACH
SP	SERVICE POINT ASSEMBLY (2 CIRCUITS)	1	EACH
SP	18" STREET NAME SIGN	2	EACH
SP & 733	HYBRID VIDEO/RADAR DETECTOR	4	EACH
SP & 733	VIDEO CABLE (EXTERIOR CAT 5E)	960	LIN. FT.
SP & 733	VIDEO MONITOR (CLR)	1	EACH
SP & 733	CENTRAL CONTROL UNIT (8 CHANNEL)	1	EACH

DATE REVISED	DATE REVISED	FED.RD. DIST.NO.	STATE	JOB NO.	SHEET NO.	TOTAL SHEETS
		6	ARK.	040861	121	291
		TRAFFIC SIGNAL NOTES				

STATE OF ARKANSAS
LICENSED PROFESSIONAL ENGINEER
No. 11425
TRINITY D. SMITH

09-27-2023

TRAFFIC SIGNAL NOTES:

1. THE TRAFFIC SIGNAL SHALL NOT BE PUT INTO OPERATION OR SWITCHED TO THE NEXT CONSTRUCTION STAGE PRIOR TO THE FOLLOWING:

   A. ALL TRAFFIC SIGNAL EQUIPMENT HAS BEEN INSTALLED ACCORDING TO THE PLANS, SPECIAL PROVISIONS, AND PROPERLY FUNCTIONAL. THIS INCLUDES BUT NOT LIMITED TO: CABINETS, PULL BOXES, JUNCTION BOXES, POLES, MAST ARMS, FOUNDATIONS, LUMINAIRES, SIGNAL HEADS, PEDESTRIAN SIGNAL HEADS, PUSH BUTTONS, DETECTION SYSTEM, CONDUITS, CONDUCTORS, CABLES, TRAFFIC CONTROLLER, CONFLICT MONITOR, COMMUNICATION SYSTEM, SERVICE POINT, AND RAILROAD INTERCONNECT SYSTEM.

   B. THE DETECTION SYSTEM SHALL BE INSTALLED, SETUP, AND CONFIGURED BY THE CONTRACTOR OR THEIR SUPPLIER PER PLANS. A TRAFFIC OPERATIONS INSPECTOR SHALL INSPECT AND PROVIDE APPROVAL IN ORDER TO PUT THE TRAFFIC SIGNAL INTO OPERATION.

   C. THE TRAFFIC CONTROLLER AND CONFLICT MONITOR SHALL BE PROGRAMMED TO OPERATE AS REQUIRED PER THE PLANS (PHASING DIAGRAM, INTERVAL CHART, AND ANY ADDITIONAL NOTES), SPECIAL PROVISIONS AND ARDOT SPECIFICATIONS.

   D. TIMING SETTINGS HAVE BEEN PROGRAMMED AND APPROVED AS REQUIRED BY ITS MANAGEMENT SECTION-MAINTENANCE DIVISION.

   E. THE TRAFFIC SIGNAL HAS BEEN INSPECTED AND APPROVED BY A TRAFFIC OPERATIONS INSPECTOR.

   F. ALL REQUIRED DOCUMENTS RELATED TO THE TRAFFIC SIGNAL EQUIPMENT, THIS INCLUDES BUT NOT LIMITED TO: TEST RESULTS, CONFIGURATION/DATA REPORTS, WARRANTIES, AND ANY OTHER DOCUMENTATION REQUIRED PER PLANS AND SPECIAL PROVISIONS.

2. CONTRACTOR SHALL NOTIFY ALL EXISTING UTILITY OWNERS BEFORE BEGINNING WORK ON THIS PROJECT.

3. TRAFFIC SIGNAL CONTRACTOR SHALL NOTIFY THE RESIDENT ENGINEER OR ASSIGNED DEPARTMENT PROJECT INSPECTOR EACH DAY PRIOR TO SIGNAL RELATED WORK. NO WORK ON TRAFFIC SIGNALS WILL BE ALLOWED OR APPROVED WITHOUT THIS PRIOR NOTIFICATION.

4. THE CONTRACTOR SHALL PERFORM ALL WORK POSSIBLE THAT WILL MINIMIZE THE TIME THAT THE TRAFFIC SIGNAL IS OUT OF OPERATION. IF, IN THE OPINION OF THE ENGINEER, TRAFFIC CONDITIONS WARRANT, THE CONTRACTOR SHALL PROVIDE FLAGMEN TO DIRECT TRAFFIC WHILE THE TRAFFIC SIGNAL IS OUT OF OPERATION.

5. ALL ELECTRICAL WORK SHALL BE PERFORMED IN ACCORDANCE WITH THE CURRENT EDITIONS OF THE NFPA 70 (CURRENT EDITION) NATIONAL ELECTRICAL CODE, NFPA 101 (CURRENT EDITION) LIFE SAFETY CODE, STATE ELECTRICAL CODE AND LOCAL ELECTRICAL CODE.

6. EXTEND GREEN EQUIPMENT GROUNDING CONDUCTOR (E.G.C.) FROM GROUND BAR AT MAIN BREAKER TO CONTROL PANEL AND TO FIRST POLE. SOLIDLY BOND E.G.C. TO GROUND LUG OF CONTROL CABINET AND TO POLE GROUND. ENSURE THAT ONLY ONE NEUTRAL-TO-GROUND BOND EXISTS IN THE SYSTEM AND THAT IT IS AT THE MAIN BREAKER.

7. ELECTRICAL SERVICE SHALL BE PROVIDED BY THE CITY/COUNTY TO A SERVICE POLE WITH EXTERNAL RAINTIGHT BREAKER (MAIN BREAKER), GALVANIZED STEEL SERVICE RISER, METER LOOP (IF REQUIRED), AND WEATHERHEAD AT A MUTUALLY ACCEPTABLE POINT WITHIN THE RIGHT-OF-WAY. IF THE SERVICE POINT IS OVER 10 FEET FROM THE CONTROLLER, THE CONTRACTOR SHALL PROVIDE AND INSTALL A SEPARATE TWO CIRCUIT EXTERNAL BREAKER (SECONDARY BREAKER) ON OR NEAR THE TRAFFIC SIGNAL CONTROLLER CABINET AND SHALL INSTALL CONDUIT, ELECTRICAL SERVICE WIRE (2c/#6 A.W.G. USE RATED, WITH GROUND TYPICAL), AND PERFORM WIRING TO TAP INTO THE CITY'S/ COUNTY'S MAIN BREAKER AS PART OF THIS CONTRACT. CONDUIT IS PAID FOR AS A SEPARATE ITEM OF THIS CONTRACT. TWO CIRCUIT BREAKERS, CONSIDERED SUBSIDIARY TO THE CONTROL EQUIPMENT, ARE NEEDED WHERE STREET LIGHTING IS INCLUDED. AS PART OF THE SIGNAL INSTALLATION, STREET LIGHTING CIRCUIT (2c/#12 A.W.G. UF RATED, TYPICAL) SHALL BE KEPT FROM THE CIRCUIT SERVING THE TRAFFIC SIGNAL CONTROL EQUIPMENT FROM THE POINT OF TIE-IN AT THE SECONDARY BREAKER PROVIDED BY THE CONTRACTOR.

8. CONTRACTOR SHALL CONNECT A SEPARATE NEUTRAL FOR EACH LOAD SWITCH REPRESENTED ON EACH SIGNAL POLE.

9. TRAFFIC CONTROLLER CABINET AND LAYOUT SHALL BE SUCH THAT IT IS NOT NECESSARY TO SHUT DOWN POWER OR REMOVE LOAD SWITCHES IN ORDER TO EASILY TEST OR MODIFY DETECTOR INPUTS TO THE CONTROLLER.

10. CONTROLLER CABINET SHALL BE WIRED SUCH THAT DURING FLASH OPERATIONS POWER TO THE LOAD SWITCHES CANNOT BACKFEED TO LOAD SWITCH POWER BUSS.

11. ALL PARTS OF THIS INSTALLATION SHALL BE IN ACCORDANCE WITH THE STANDARD SPECIFICATIONS FOR HIGHWAY CONSTRUCTION, STANDARD DRAWINGS, AND WITH THE MANUAL ON UNIFORM TRAFFIC CONTROL DEVICES, CURRENT EDITION.

12. CONTROLLER CABINET LAYOUT AND ORIENTATION SHALL CONFORM TO IMSA STANDARDS.

13. DOOR PANEL TEST PUSH BUTTONS SHALL ACTUATE INDICATED PHASES. DETECTOR ASSIGNMENTS AND/OR SIDE PANEL JUMPERS MAY REQUIRE MODIFICATION.

14. ALL SYSTEM DETECTOR RACKS AND ASSOCIATED EQUIPMENT SHALL BE PROTECTED BY THE MAIN CONTROLLER CABINET POWER SURGE PROTECTION.

15. ONE VIDEO PROGRAMMNG MODULE SHALL BE PROVIDED FOR AIMING AND SETUP OF DETECTORS IF THE VIDEO SYSTEM CANNOT BE ADJUSTED THROUGH HARDWARE AND SOFTWARE PROVIDED BY ITEMS WITHIN THE JOB.

16. HARDWARE INPUTS MAY BE DETERMINED BY SUPPLIER. EACH DETECTOR OUTPUT SHALL INPUT THE CONTROLLER THROUGH A SEPARATE INPUT UNLESS OTHERWISE NOTED AND BE PROGRAMMED TO ACTUATE THE ASSOCIATED PHASE. COMBINATION (COMB.) DETECTORS SHALL ALSO BE PROGRAMMED TO PROVIDE VEHICLE COUNT/OCCUPANCY DATA.

17. THE LOCAL RADIO WITH ANTENNA AND TRAFFIC SIGNAL CONTROLLER SHALL BE COMPATIBLE WITH THE EXISTING COORDINATION SYSTEM IN THE CITY/COUNTY.

18. CONDUIT INSTALLED UNDER ROADWAY SURFACES SHALL BE INSTALLED BY PUSHING OR BORING METHOD OR AS DIRECTED BY THE ENGINEER. PVC OR HDPE CONDUIT SHALL BE USED AND SHALL BE UL LISTED. PVC CONDUIT SHALL BE MARKED "DIR. BORING" OR "DIRECTIONAL BORING" PER NEC. IF THE ENGINEER DETERMINES THIS IS NOT FEASIBLE, THEN A TRENCHING METHOD AS SHOWN IN THE STANDARD DRAWINGS MAY BE USED. THE ENGINEER SHALL GRANT A WRITTEN APPROVAL PRIOR TO USING THE TRENCHING METHOD.

19. ALL CONDUIT SHALL BE THREE (3") INCH DIAMETER UNLESS SPECIFIED ON PLANS. ALL CONDUIT UNDER THE ROADWAY, SIDEWALKS, AND DRIVEWAYS SHALL HAVE A MINIMUM DEPTH OF 24' FROM THE TOP OF THE CONDUIT TO THE FINISHED GRADE. CONDUIT DEPTH MAY NEED TO INCREASE NEAR DRAINAGE STRUCTURES.

20. CONDUIT BELL END FITTINGS SHALL BE INSTALLED ON ALL TERMINATING ENDS OF NON-METALLIC CONDUIT RUNS. THIS INCLUDES PULL BOXES, POLE BASES, AND TRAFFIC SIGNAL CABINETS. THE COST OF THE FITTINGS SHALL BE CONSIDERED SUBSIDARY TO THE PAY ITEM. ALL NON-METALLIC CONDUIT SHALL USE LONG SWEEP 90 DEGREE ELBOWS ON ALL CONDUIT BENDS.

21. ALL CONCRETE PULL BOXES SHALL BE (TYPE 2 HD) UNLESS OTHERWISE INDICATED. PULL BOX LIDS SHALL CLOSE FLUSH WITHOUT PINCHING ANY CONDUCTORS. CONDUIT LENGTHS IN PULL BOXES SHALL BE SET ACCORDINGLY. ANY CONDUCTORS THAT HAVE BEEN DAMAGED BY PINCHING SHALL BE COMPLETELY REPLACED AT THE CONTRACTOR'S EXPENSE.

22. ALL CONCRETE PULL BOXES SHALL BE SET ON A GRAVEL OR CRUSHED STONE BEDDING AS SPECIFIED IN SECTION 711, CONCRETE PULL BOX, OF THE STANDARD SPECIFICATIONS FOR HIGHWAY CONSTRUCTION, EDITION OF 2014.

23. CONTRACTOR SHALL ATTACH A PERMANENT TAG OF RIGID PLASTIC OR NON-FERROUS METAL TO EACH CONDUIT AT PULLBOXES, POLE BASES, JUNCTION BOXES AND CONTROLLER CABINETS. TAGS SHALL BE EMBOSSED, STAMPED OR ENGRAVED WITH LETTERS 1/4" OR GREATER IN HEIGHT AND SECURED TO THE CONDUIT WITH NYLON OR PLASTIC TIES. EACH TAG SHALL INDICATE THE END LOCATION OF CONDUIT RUN. THE COST OF THE TAGS SHALL BE SUBSIDIARY TO THE CONDUIT PAY ITEM.
   EXAMPLES FOR CONDUIT IN SIDE CABINET: "TO POLE A AND B" OR "TO POLE C"
   EXAMPLES FOR CONDUIT IN PULL BOX: "TO POLE A" OR "TO TRAFFIC CABINET"

24. ALL STEEL POLES SHALL BE DESIGNED TO MEET THE AASHTO STANDARD SPECIFICATIONS FOR STRUCTURAL SUPPORTS FOR HIGHWAY SIGNS, LUMINAIRES AND TRAFFIC SIGNALS, 4th EDITION (2001) WITH 2003 AND 2006 INTERIMS.

25. ALL TRAFFIC SIGNAL POLES SHALL BE GALVANIZED.

26. CONNECTION OF TRAFFIC SIGNAL DISPLAY TO FIELD WIRING SHALL UTILIZE AN APPROVED TERMINAL STRIP BEHIND HAND-HOLE COVER AT BASE OF POLE. TERMINAL STRIP SHALL PROVIDE PROTECTION TO PREVENT EXPOSURE TO THE PUBLIC IN THE EVENT THAT POLE COVER IS MISSING. PAYMENT FOR TERMINAL STRIPS SHALL BE INCLUDED IN ITEM 714 TRAFFIC SIGNAL MAST ARM AND POLE WITH FOUNDATION OF THE STANDARD SPECIFCATIONS FOR HIGHWAY CONSTRUCTION, CURRENT EDITION.

27. FOUNDATION FOR ALL POLES SHALL BE EXTENDED IF NECESSARY TO ACCOMMODATE THE REQUIREMENTS FOR SIGNAL HEAD CLEARANCE ABOVE ROADWAY ONLY AT LOCATIONS WHERE THE GROUND ELEVATION AT THE POLE IS BELOW THE ELEVATION OF THE ROADWAY (SEE NOTES ON STANDARD DRAWING). PAYMENT WILL BE INCLUDED IN SECTION 714 TRAFFIC SIGNAL MAST ARM AND POLE WITH FOUNDATION OF THE STANDARD SPECIFICATIONS FOR HIGHWAY CONSTRUCTION, CURRENT EDITION.

28. TO DETERMINE UTILITY CLEARANCES ABOVE THE TRAFFIC SIGNAL POLE, REFER TO THE POLE SCHEDULE FOR VERTICAL SHAFT HEIGHT. WHERE THE POLE SCHEDULE INDICATES THAT A LUMINAIRE ARM WILL BE USED, THIRTY-EIGHT (38') FEET SHOULD BE USED TO DETERMINE UTILITY CLEARANCE ABOVE THE LUMINAIRE ARM. WHERE THE POLE SCHEDULE INDICATES A TRAFFIC SIGNAL POLE WITHOUT A LUMINAIRE ARM, A HEIGHT OF TWENTY-ONE (21') FEET SHOULD BE USED TO DETERMINE UTILITY CLEARANCE ABOVE THE TRAFFIC SIGNAL MAST ARM. AN ADDITIONAL SIX (6') FEET SHOULD BE USED DIRECTLY ABOVE "VIDEO DETECTOR" AT LOCATIONS SHOWN ON THE SIGNAL PLANS.

29. THE DESIRABLE MINIMUM DISTANCE FROM THE FACE OF ROADWAY CURB OR SHOULDER EDGE TO THE FACE OF NON-BREAKAWAY POLE OR OBSTRUCTION IS SIX (6') FEET. REFER TO TRAFFIC SIGNAL PLANS FOR SPECIFIC LOCATION OF POLES, CONTROLLER AND ANY OTHER NON-BREAKAWAY OBSTRUCTIONS. REFER TO "DESIGN PARAMETERS, MINIMUM CLEAR ZONE DISTANCE" FOR MINIMUM DISTANCE FROM THE EDGE OF TRAVELED WAY TO THE FACE OF A NON-BREAKAWAY POLE OR OBSTRUCTION. TRAFFIC SIGNAL POLES OR ANY OTHER NON-BREAKAWAY OBSTRUCTION SHALL NOT BE INSTALLED WITHIN THE CLEAR ZONE.

30. AS DETERMINED BY THE ENGINEER, FOUNDATION EMBEDMENT MAY BE DECREASED BY A MAXIMUM OF TWO FEET IF COMPETENT ROCK IS ENCOUNTERED PRIOR TO ACHIEVING PLAN EMBEDMENT AND AT LEAST HALF OF THE REMAINING PLAN EMBEDMENT LENGTH IS KEYED INTO COMPETENT ROCK.

31. LED LUMINAIRE ASSEMBLIES SHALL HAVE A BUG RATING OF U0.

32. BACKPLATES SHALL BE SUPPLIED FOR ALL TRAFFIC SIGNAL HEADS, REFER TO THE RETROREFLECTIVE BACKPLATES SPECIAL PROVISION FOR REQUIREMENTS.

33. PAVEMENT MARKINGS SHOWN FOR REFERENCE ONLY. SEE PERMANENT PAVEMENT MARKING DETAILS.

34. BEFORE FINAL ACCEPTANCE OF THE TRAFFIC SIGNAL, THE CONTRACTOR SHALL PROVIDE TWO (2) SETS OF LEDGER SIZE (11" X 17") AS-BUILT TRAFFIC SIGNAL PLANS TO THE MAINTENANCE AUTHORITY AND ARDOT.

DATE: 09-08-2023 FILE NAME: t040861_job.dgn

LOCATION:	HWY. 10/HWY. 96 AND HWY. 10/HWY. 10B		
CITY:	GREENWOOD		
COUNTY:	SEBASTIAN		
DISTRICT: 04	SCALE: N/A	DRAWN BY: GWE	

DATE REVISED	DATE REVISED	FED.RD. DIST.NO.	STATE	JOB NO.	SHEET NO.	TOTAL SHEETS
		6	ARK.	040861	122	291
		TRAFFIC SIGNAL STREET NAME SIGNS				

STATE OF ARKANSAS
LICENSED PROFESSIONAL ENGINEER
No. 11425
TRINITY D. SMITH

09-27-2023

OVERHEAD STREET NAME MARKER
STANDARD MAST ARM MOUNTED

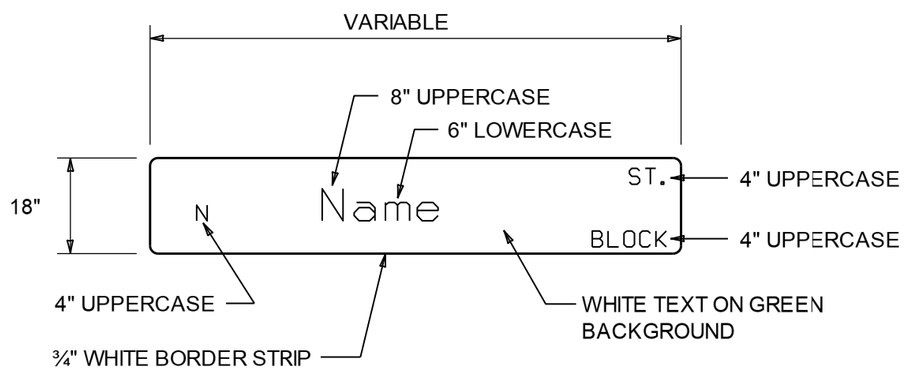

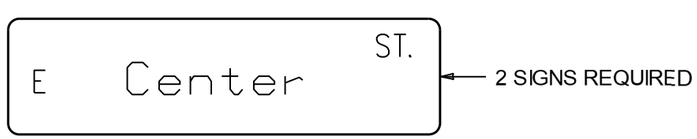

NOTES:

1. REFLECTIVE SHEETING SHALL COMPLY WITH ASTM 4956 TYPE 8 OR 9 REFLECTIVE SHEETING. SHEETING AND LEGEND SHALL BE APPLIED IN SUCH A MANNER TO PROVIDE WRINKLE AND BUBBLE FREE SURFACES. APPLICATION OF SHEETING IS CAUSE FOR REJECTION OF MATERIALS DUE TO WORKMANSHIP.
2. ALUMINUM SIGN BLANK SHALL BE ALLOY 6061-T6 OR 5052-H38. THE ALUMINUM SIGN SHALL BE ALSO ALODIZED. THE ALUMINUM SHEETING SHALL BE 0.100 INCH NOMINAL THICKNESS AND OF THE SIZE SHOWN WITH 1.5" CORNER RADII. PRIOR TO FABRICATION OF THE SIGNS, THE LAYOUT SHALL FIRST BE APPROVED BY AN AGENT OF THE CITY/ COUNTY.
3. WHEN CROSSROAD HAS TWO NAMES, THE SIGN FOR THE CROSSROAD TO THE LEFT MAY BE INSTALLED ON THE BACKSIDE OF THE MAST ARM ON THE NEARSIDE LEFT POLE. SEE STANDARD DRAWING SHEET FOR MORE INFORMATION FOR MOUNTING ON MAST ARM ASSEMBLY.
4. THE SERIES C 2000 STANDARD ALPHABET SHALL BE USED FOR ALL LETTERS.

DATE: 09-08-2023 FILE NAME: t040861_job.dgn

LOCATION: HWY. 10/HWY. 96 AND HWY. 10/HWY. 10B
CITY: GREENWOOD
COUNTY: SEBASTIAN
DISTRICT: 04 SCALE: 1"=N/A DRAWN BY: GWE

DATE REVISED	DATE REVISED	FED.RD. DIST.NO.	STATE	JOB NO.	SHEET NO.	TOTAL SHEETS
		6	ARK.	040861	123	291
		GROUNDING ARRAY DETAIL				

GROUNDING ARRAY
SINGLE-PORT FUSION WELDS

STATE OF ARKANSAS
LICENSED PROFESSIONAL ENGINEER
No. 11425
TRINITY D. SMITH
09-27-2023

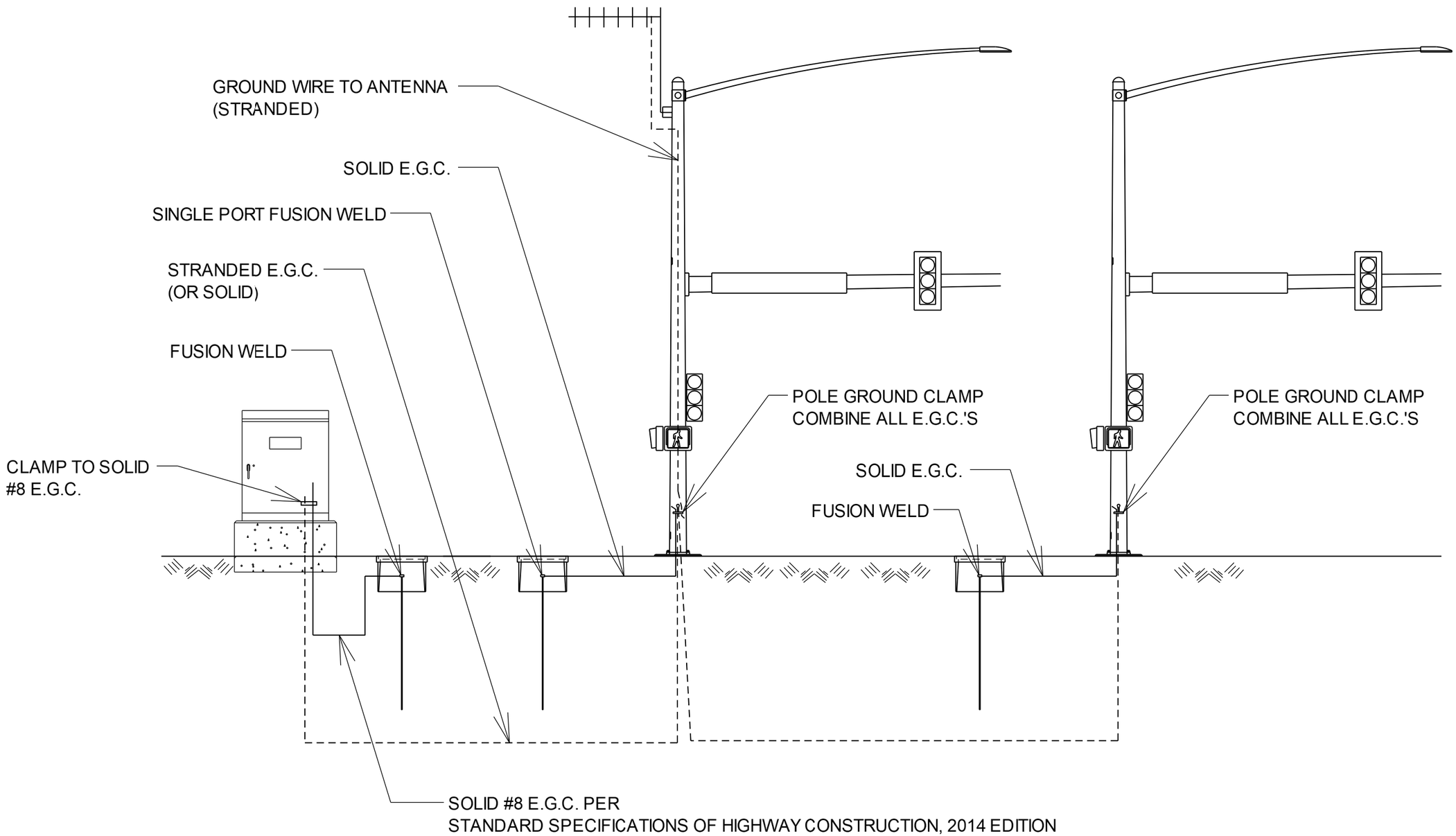

LOCATION: HWY. 10/HWY. 96 AND HWY. 10/HWY. 10B
CITY: GREENWOOD
COUNTY: SEBASTIAN
DISTRICT: 04 SCALE: N/A DRAWN BY: GWE

DATE: 09-08-2023 FILE NAME: t040861_job.dgn

DATE REVISED	DATE REVISED	FED.RD. DIST.NO.	STATE	JOB NO.	SHEET NO.	TOTAL SHEETS
		6	ARK.	040861	124	291
		PEDESTRIAN PUSH BUTTON PEDESTAL DETAIL				

STATE OF ARKANSAS
TRINITY D. SMITH
LICENSED PROFESSIONAL ENGINEER
No. 11425
09-27-2023

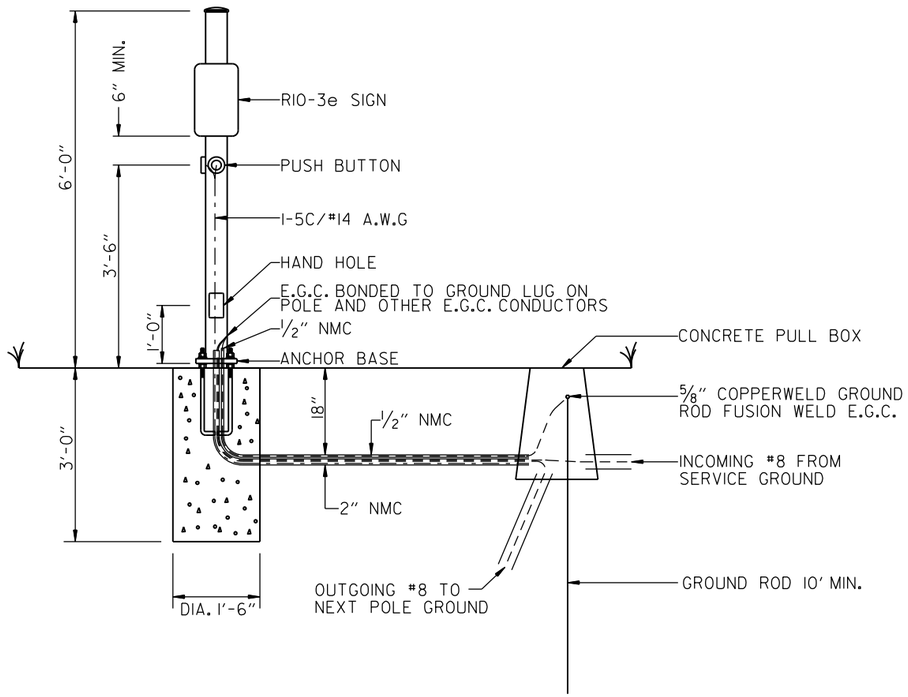

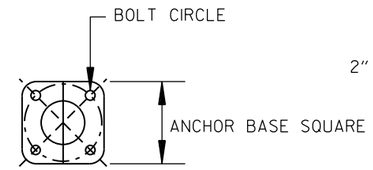

ANCHOR BASE
N.T.S.

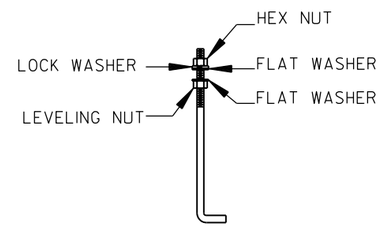

ANCHOR BOLT
N.T.S.

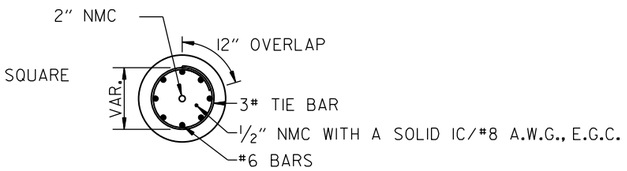

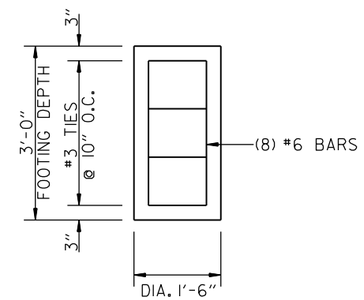

PEDESTRIAN PUSH BUTTON PEDESTAL DETAIL

NOTES:

EACH PEDESTRIAN PUSH BUTTON SHALL HAVE ONE R10-3E SIGN ATTACHED TO THE POLE ABOVE THE BUTTON. ALL SIGNS SHALL BE MANUFACTURED IN ACCORDANCE WITH SECTION 723 OF THE STANDARD SPECIFICATIONS FOR HIGHWAY CONSTRUCTION.

ALL SIGN BLANKS SHALL BE CONSTRUCTED OF ALUMINUM ALLOY (ASTM DESIGNATION B-209. ALLOY 5052-H38) WITH THICKNESS OF 0.100 INCH.

MINIMUM STRUCTURAL REQUIREMENTS:
DESIGN SPECIFICATIONS: AASHTO STANDARD SPECIFICATIONS FOR STRUCTURAL SUPPORTS FOR HIGHWAY SIGNS, LUMINAIRES AND TRAFFIC SIGNALS, 4TH EDITION (2001) WITH 2003 AND 2006 INTERIMS.

CONSTRUCTION SPECIFICATIONS:
STANDARD SPECIFICATIONS FOR HIGHWAY CONSTRUCTION (CURRENT EDITION) WITH APPLICABLE SUPPLEMENTAL SPECIFICATIONS AND SPECIAL PROVISIONS.

POLE CAP - POLE CAPS SHALL BE PROVIDED, FABRICATED OF EITHER STEEL OR CAST ALUMINUM.

HAND HOLE - HAND HOLES SHALL BE 3 IN. X 5 IN. FOR PED POLES. MINIMUM PLACED APPROXIMATELY 12 INCHES FROM BASE, AND SHALL BE FIXED WITH A BOLT DOWN COVER. A VACUUM FORMED ABS COVER IS AN ACCEPTABLE ALTERNATE TO STEEL.

NUT COVERS - EACH POLE SHALL INCLUDE A BOLT DOWN NUT COVER FOR EACH ANCHOR BOLT.

GROUND ROD - A 10' X 5/8" GROUND ROD SHALL BE INSTALLED IN THE CONCRETE PULL BOX FOR EACH POLE AND THE CONTROLLER. PAYMENT FOR THE GROUND ROD AND 1/2" NMC SHALL BE INCLUDED IN ITEM 714 FOR SIGNAL POLES AND ITEM 701 FOR THE CONTROLLER. THE CONCRETE PULL BOX AND CONDUCTOR BOX SHALL BE PAID SEPARATELY.

POLE BASE/FOUNDATION - ANCHOR BOLTS SHALL INCLUDE AS A MINIMUM, ONE LEVELING NUT, TWO FLAT WASHERS, ONE LOCK WASHER, AND ONE HEX NUT. PERIMETER OF ANCHOR BASE SHALL BE GROUTED WITH A 1/4" WEEP HOLE. ALL CONCRETE SHALL BE CLASS "S" OR GREATER.

CONCRETE - ALL CONCRETE POLE FOUNDATION SHALL BE CLASS "S" OR GREATER.

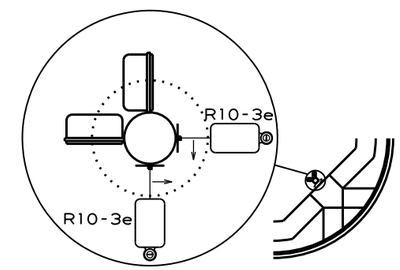

TYPICAL MOUNTING PUSH BUTTON ON SIGNAL POLE

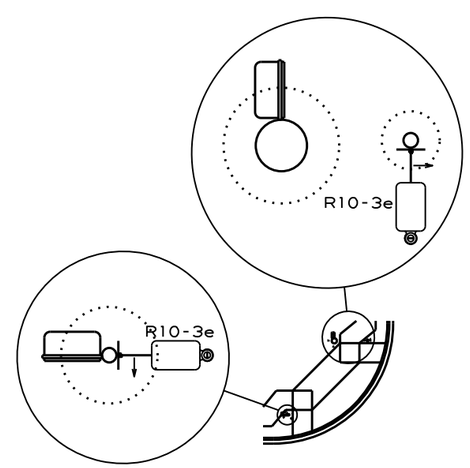

TYPICAL MOUNTING PUSH BUTTON ON PEDESTRIAN POLE AND PEDESTRIAN PUSH BUTTON POLE

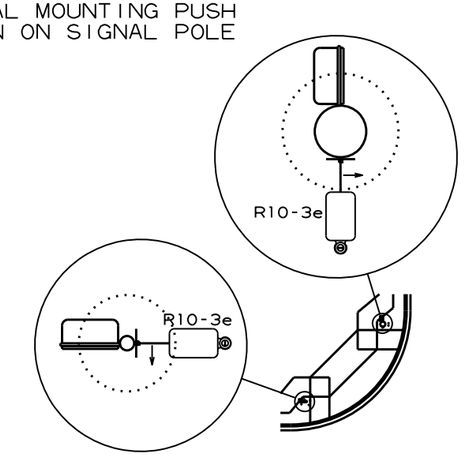

TYPICAL MOUNTING PUSH BUTTON ON PEDESTRIAN POLE AND SIGNAL POLE

DATE: 09-08-2023 FILE NAME: t040861_job.dgn

LOCATION:	HWY. 10/HWY. 96 AND HWY. 10/HWY. 10B			
CITY:	GREENWOOD			
COUNTY:	SEBASTIAN			
DISTRICT:	04	SCALE: 1"=N/A	DRAWN BY:	GWE

DATE REVISED	DATE REVISED	FED.RD. DIST.NO.	STATE	JOB NO.	SHEET NO.	TOTAL SHEETS
		6	ARK.	040861	125	291
		SIGNALIZATION PLAN SHEET				

STATE OF ARKANSAS LICENSED PROFESSIONAL ENGINEER No. 11425 TRINITY D. SMITH

09-27-2023

SIGNAL FACES

12" LENSES

ONE SECTION (SOLID SYMBOL)

17 & 18
19 & 20
21 & 22
23 & 24

NOTES:

1. ALL SIGNAL HEADS SHALL HAVE BACKPLATES.
2. REFER TO SPECIAL PROVISION "RETROREFLECTIVE BACKPLATES" FOR DETAILS ON REQUIREMENTS FOR BACKPLATES.
3. REFER TO SPECIAL PROVISIONS FOR DETAILS ON REQUIREMENTS FOR PEDESTRIAN SIGNAL HEADS.
4. ALL PEDESTRIAN SIGNAL HEADS CAN BE PLACED INTO OPERATION IF THERE ARE BOTH WHEELCHAIR RAMPS AND A CROSSWALK THAT MEETS A.D.A.S. STANDARD.

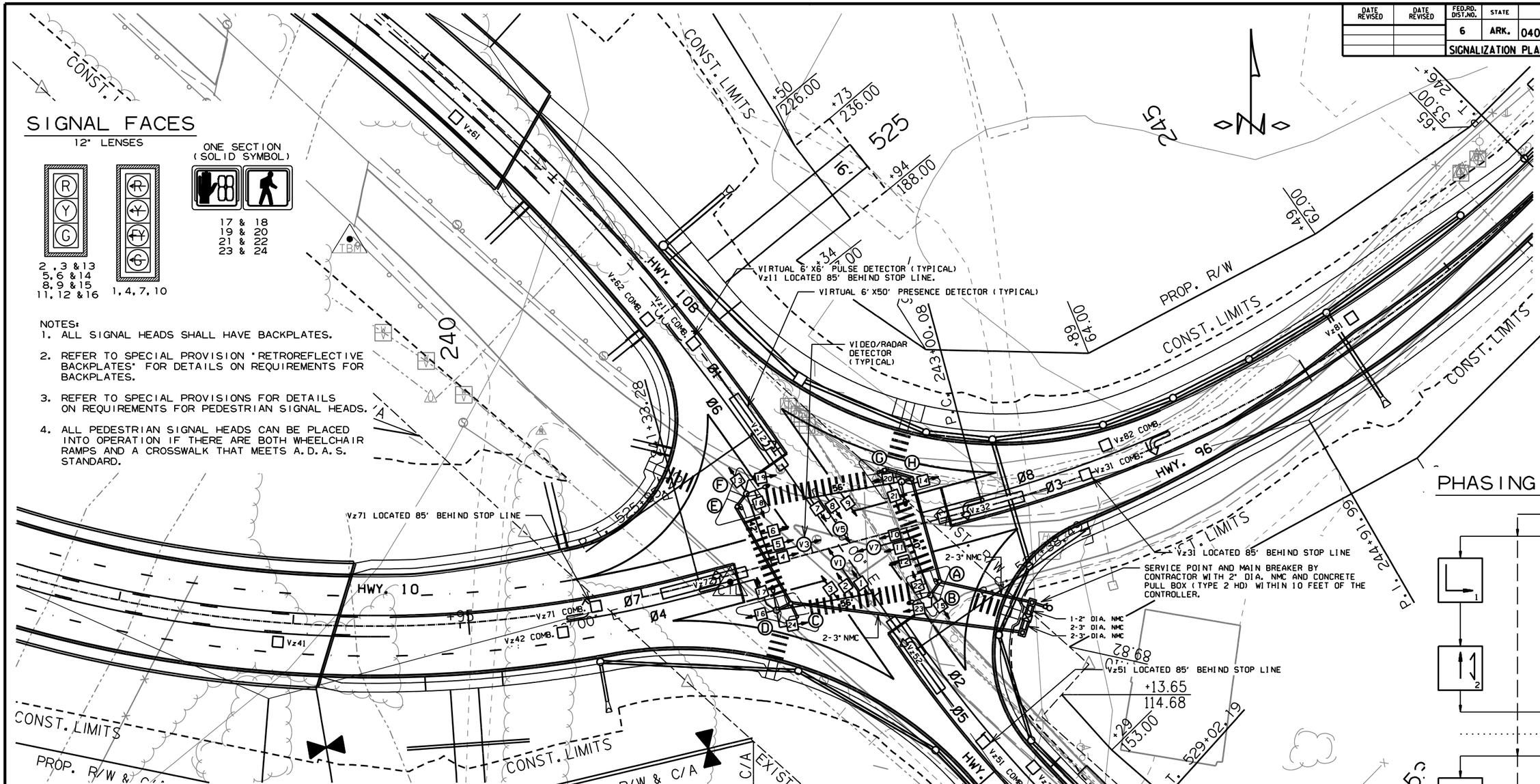

PHASING DIAGRAM

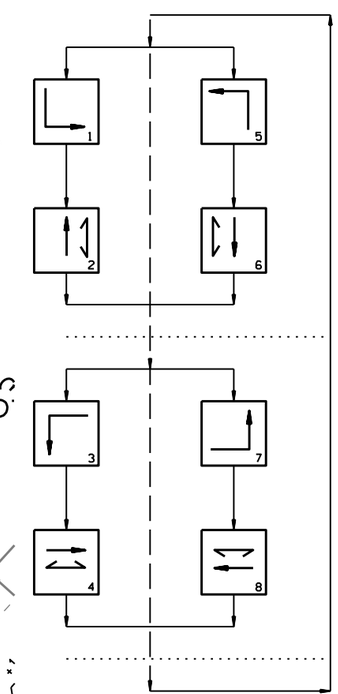

HWY. 10/HWY. 96 AND HWY. 10/HWY. 10B POLE DIMENSIONS

POLE	MAST ARM	* MAST ARM ANGLE	** HAND HOLE	VERT. SHAFT	LUM. ARM	* LUM. ANGLE
A	N/A	N/A	N/A	6'	N/A	N/A
B	40'	340°	180°	35'	10'	250°
C	N/A	N/A	N/A	6'	N/A	N/A
D	56'	80°	180°	35'	10'	350°
E	N/A	N/A	N/A	6'	N/A	N/A
F	42'	160°	180°	35'	10'	70°
G	N/A	N/A	N/A	6'	N/A	N/A
H	56'	260°	180°	35'	10'	170°

* MAST ARM AND LUMINAIRE ARM ANGLE MEASURED FROM PLAN NORTH = 0°, CLOCKWISE ROTATION.

** HAND HOLE LOCATION MEASURED CLOCKWISE FROM MAST ARM. POLES A, C, E, & G (SEE PEDESTRIAN PUSH BUTTON PEDESTAL DETAIL).

DETECTOR SPACING CHART

ARDOT HWYS. 10/10B MAIN LANE VIRTUAL LOOPS		
POSTED SPEED	DISTANCE FROM STOP LINE	
	LEAD VDZ	LAG VDZ
45 MPH	260'	115'
HWYS. 10/96 MAIN LANE VIRTUAL LOOPS		
POSTED SPEED	DISTANCE FROM STOP LINE	
	LEAD VDZ	LAG VDZ
45 MPH	260'	115'

SCALE IN FEET

0 30 60 120

DATE: 09-08-2023 FILE NAME: t040861_01.dgn

LOCATION: HWY.10/HWY.96 AND HWY.10/HWY. 10B
CITY: GREENWOOD
COUNTY: SEBASTIAN
DISTRICT: 04 SCALE: 1"=60' DRAWN BY: GWE

DATE REVISED	DATE REVISED	FED.RD. DIST.NO.	STATE	JOB NO.	SHEET NO.	TOTAL SHEETS
		6	ARK.	040861	126	291
		SIGNALIZATION PLAN SHEET				

STATE OF ARKANSAS LICENSED PROFESSIONAL ENGINEER No. 11425 TRINITY D. SMITH

09-27-2023

DESIGN PARAMETERS

POSTED SPEED LIMIT:
45 MPH EAST AND WEST APPROACH
45 MPH NORTH AND SOUTH APPROACH

NO BUS STOPS
NO RAILROAD TRACKS
NO EXISTING INTERCONNECTIONS
NO FIRE STATION
NO PARKING
NO SIGHT DISTANCE RESTRICTIONS

LOCATION OF STOP LINES SHOWN ON PERMANENT PAVEMENT MARKING DETAILS (SEE SEPARATE SHEET).

MINIMUM CLEAR ZONE DISTANCE
4 FEET BEHIND CURB

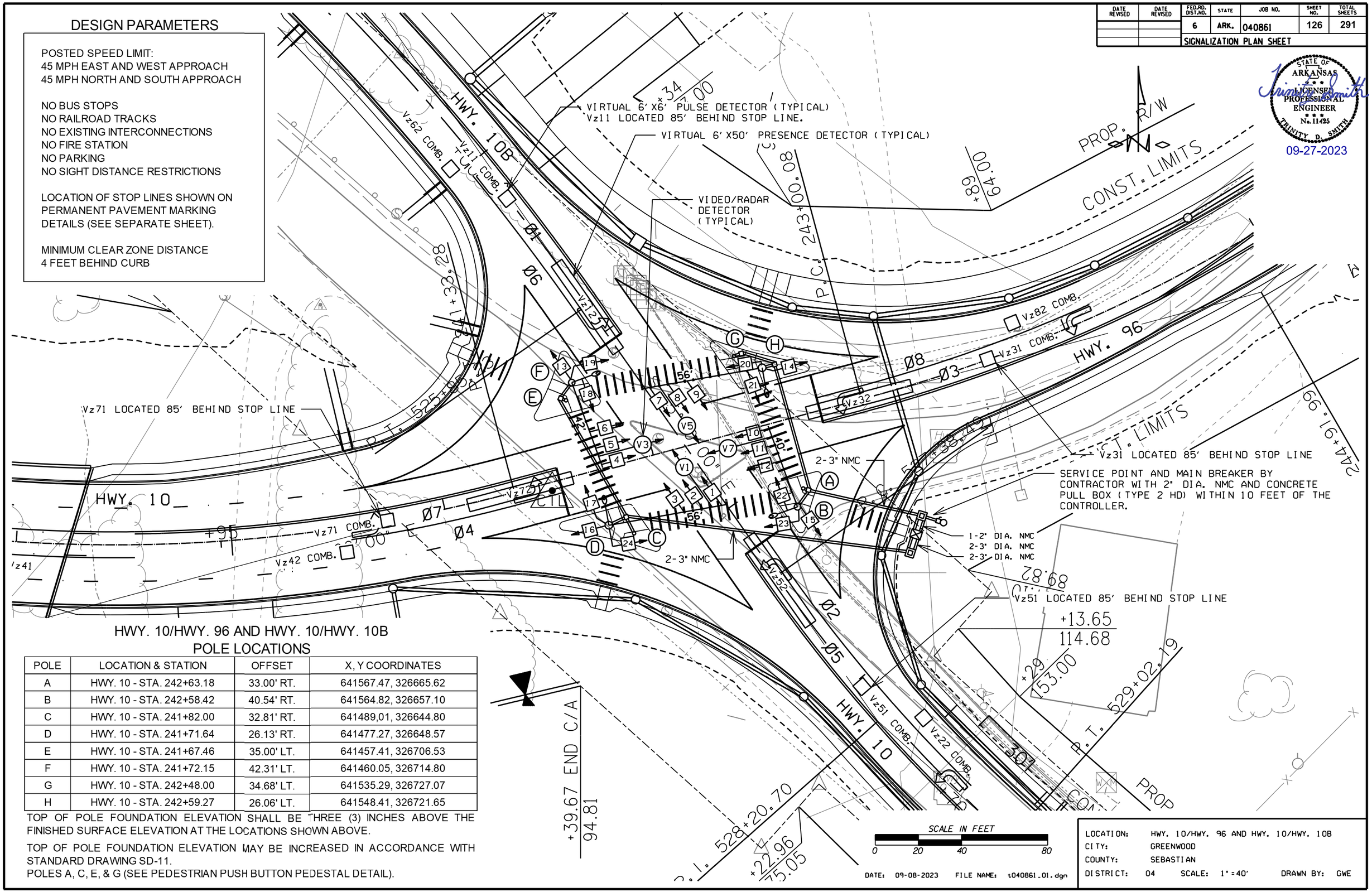

HWY. 10/HWY. 96 AND HWY. 10/HWY. 10B POLE LOCATIONS

POLE	LOCATION & STATION	OFFSET	X, Y COORDINATES
A	HWY. 10 - STA. 242+63.18	33.00' RT.	641567.47, 326665.62
B	HWY. 10 - STA. 242+58.42	40.54' RT.	641564.82, 326657.10
C	HWY. 10 - STA. 241+82.00	32.81' RT.	641489,01, 326644.80
D	HWY. 10 - STA. 241+71.64	26.13' RT.	641477.27, 326648.57
E	HWY. 10 - STA. 241+67.46	35.00' LT.	641457.41, 326706.53
F	HWY. 10 - STA. 241+72.15	42.31' LT.	641460.05, 326714.80
G	HWY. 10 - STA. 242+48.00	34.68' LT.	641535.29, 326727.07
H	HWY. 10 - STA. 242+59.27	26.06' LT.	641548.41, 326721.65

TOP OF POLE FOUNDATION ELEVATION SHALL BE THREE (3) INCHES ABOVE THE FINISHED SURFACE ELEVATION AT THE LOCATIONS SHOWN ABOVE.

TOP OF POLE FOUNDATION ELEVATION MAY BE INCREASED IN ACCORDANCE WITH STANDARD DRAWING SD-11.

POLES A, C, E, & G (SEE PEDESTRIAN PUSH BUTTON PEDESTAL DETAIL).

DATE: 09-08-2023 FILE NAME: t040861_01.dgn

LOCATION: HWY. 10/HWY. 96 AND HWY. 10/HWY. 10B
CITY: GREENWOOD
COUNTY: SEBASTIAN
DISTRICT: 04 SCALE: 1"=40' DRAWN BY: GWE

DATE REVISED	DATE REVISED	FED.RD. DIST.NO.	STATE	JOB NO.	SHEET NO.	TOTAL SHEETS
		6	ARK.	040861	127	291
		SIGNALIZATION PLAN SHEET				

STATE OF ARKANSAS LICENSED PROFESSIONAL ENGINEER No. 11425 TRINITY D. SMITH

09-27-2023

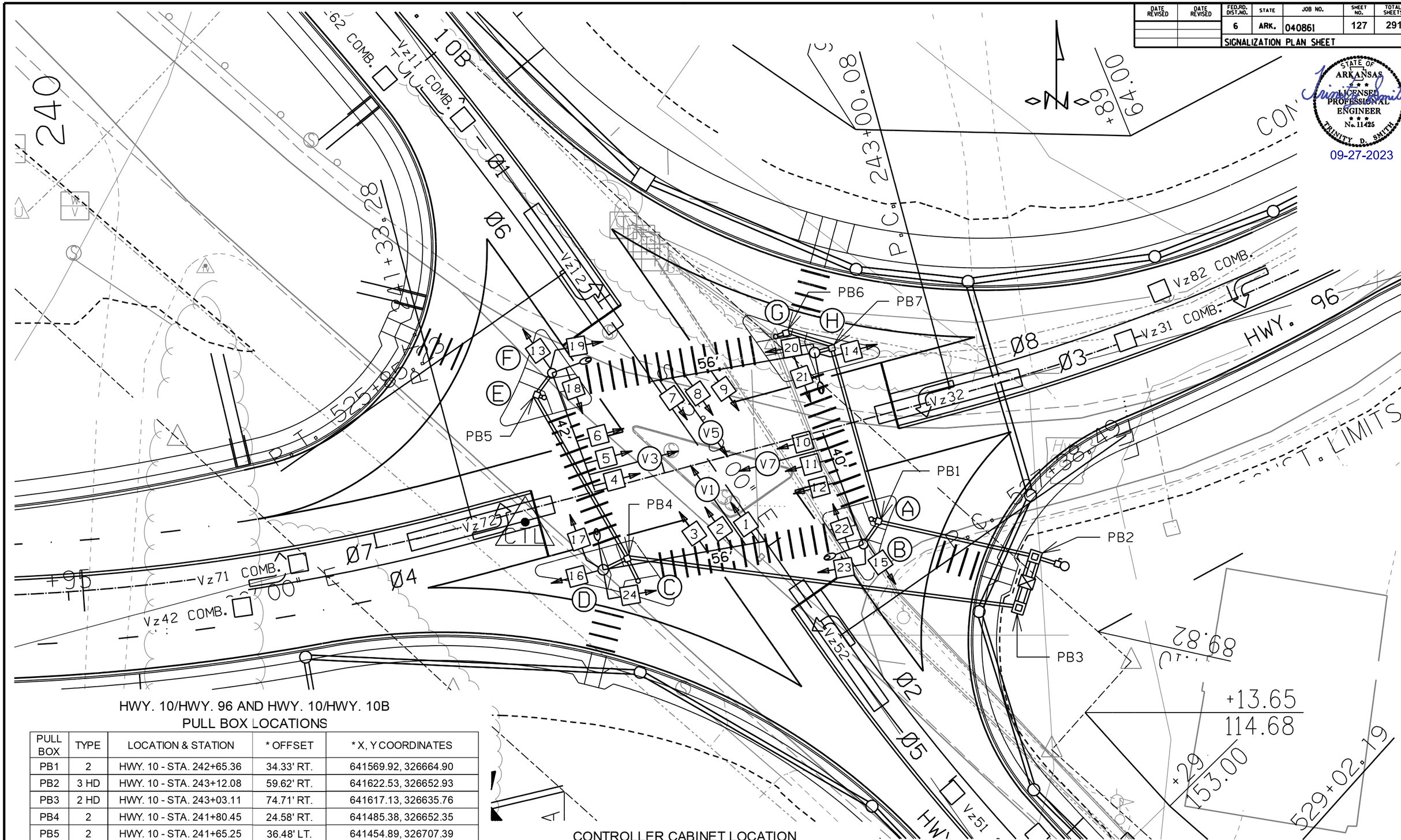

HWY. 10/HWY. 96 AND HWY. 10/HWY. 10B
PULL BOX LOCATIONS

PULL BOX	TYPE	LOCATION & STATION	* OFFSET	* X, Y COORDINATES
PB1	2	HWY. 10 - STA. 242+65.36	34.33' RT.	641569.92, 326664.90
PB2	3 HD	HWY. 10 - STA. 243+12.08	59.62' RT.	641622.53, 326652.93
PB3	2 HD	HWY. 10 - STA. 243+03.11	74.71' RT.	641617.13, 326635.76
PB4	2	HWY. 10 - STA. 241+80.45	24.58' RT.	641485.38, 326652.35
PB5	2	HWY. 10 - STA. 241+65.25	36.48' LT.	641454.89, 326707.39
PB6	2	HWY. 10 - STA. 242+51.65	34.89' LT.	641538.76, 326728.22
PB7	2	HWY. 10 - STA. 242+65.27	26.03' LT.	641554.21, 326723.18

* CENTER OF PULL BOX
ALL PULL BOXES SHALL BE PLACED AT THE FINISHED SURFACE ELEVATION.

CONTROLLER CABINET LOCATION

LOCATION & STATION	* OFFSET	* X, Y COORDINATES
HWY. 10 - STA. 243+07.55	67.15' RT.	641619.83, 326644.35

* CENTER OF CABINET

SCALE IN FEET
0 15 30 60

DATE: 09-08-2023 FILE NAME: t040861_01.dgn

LOCATION: HWY. 10/HWY. 96 AND HWY. 10/HWY. 10B
CITY: GREENWOOD
COUNTY: SEBASTIAN
DISTRICT: 04 SCALE: 1"=30' DRAWN BY: GWE

DATE REVISED	DATE REVISED	FED.RD. DIST.NO.	STATE	JOB NO.	SHEET NO.	TOTAL SHEETS
		6	ARK.	040861	128	291
		SIGNALIZATION PLAN SHEET				

STATE OF ARKANSAS LICENSED PROFESSIONAL ENGINEER No. 11425 TRINITY D. SMITH

09-27-2023

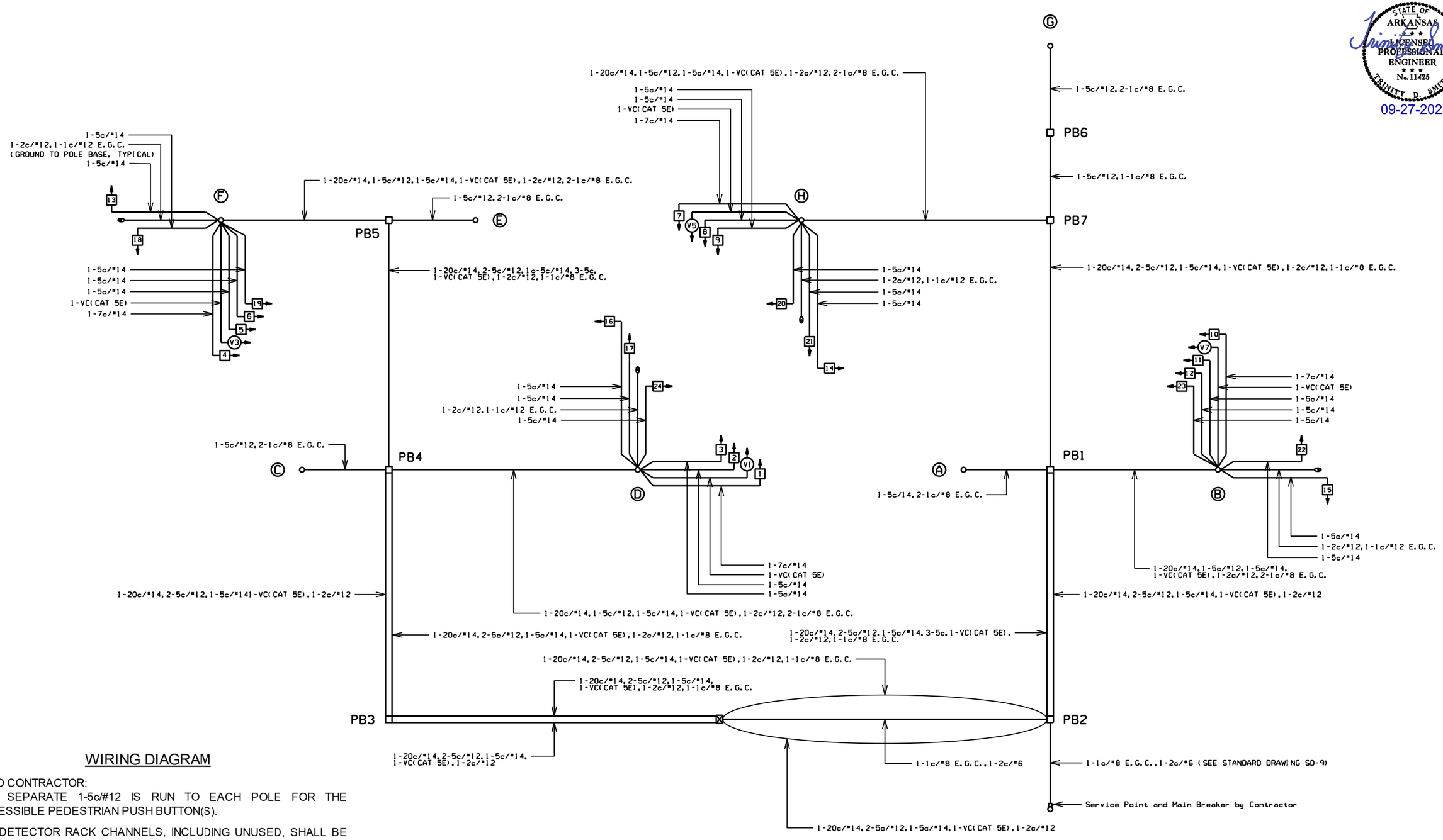

WIRING DIAGRAM

NOTES TO CONTRACTOR:

1. ONE SEPARATE 1-5c/#12 IS RUN TO EACH POLE FOR THE ACCESSIBLE PEDESTRIAN PUSH BUTTON(S).
2. ALL DETECTOR RACK CHANNELS, INCLUDING UNUSED, SHALL BE BROUGHT TO TERMINAL STRIP IN DETECTOR AREA OF CABINET.
3. THE LOCAL GOVERNMENT SHALL BE RESPONSIBLE FOR PROVIDING POWER TO THE SERVICE POINT.
4. SEE GROUNDING ARRAY DETAIL ON SHEET XXX.

DATE: 09-08-2023 FILE NAME: t040861_01.dgn

LOCATION: HWY. 10/HWY. 96 AND HWY. 10/HWY. 10B
CITY: GREENWOOD
COUNTY: SEBASTIAN
DISTRICT: 04 SCALE: N/A DRAWN BY: GWE

DATE REVISED	DATE REVISED	FED.RD. DIST.NO.	STATE	JOB NO.	SHEET NO.	TOTAL SHEETS
		6	ARK.	040861	129	291
		SIGNALIZATION PLAN SHEET				

STATE OF ARKANSAS
LICENSED PROFESSIONAL ENGINEER
No. 11425
TRINITY D. SMITH
09-27-2023

PHASING DIAGRAM

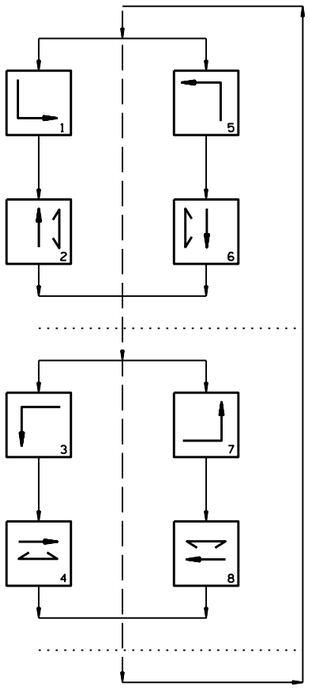

SIGNAL FACES

12" LENSES

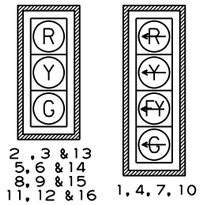

2, 3 & 13
5, 6 & 14
8, 9 & 15
11, 12 & 16

1, 4, 7, 10

ONE SECTION
(SOLID SYMBOL)

17 & 18
19 & 20
21 & 22
23 & 24

NOTES:
1. ALL SIGNAL HEADS SHALL HAVE BACKPLATES.
2. REFER TO SPECIAL PROVISION "RETROREFLECTIVE BACKPLATES" FOR DETAILS ON REQUIREMENTS FOR BACKPLATES.
3. REFER TO SPECIAL PROVISIONS FOR DETAILS ON REQUIREMENTS FOR PEDESTRIAN SIGNAL HEADS.
4. ALL PEDESTRIAN SIGNAL HEADS CAN BE PLACED INTO OPERATION IF THERE ARE BOTH WHEELCHAIR RAMPS AND A CROSSWALK THAT MEETS A.D.A.S. STANDARD.

DETECTOR CHART

DETECTOR SYSTEM DESCRIPTION: JOB 040861											
HWY. 10/HWY. 96 AND HWY. 10/HWY. 10B DETECTOR ASSIGNMENTS				HARDWARE INPUTS BY SUPPLIER			PROGRAM ASSIGNMENTS			COMMENTS	TUBE LENGTHS
							LOCAL		MASTER SYSTEM DETECTOR NUMBERS		
DET. ID #	LOCATION DIRECTION	TYPE	DET #	CAB. TRM. #	AMP CHN. #	CON. IMP. #	PHS	SYSTEM DET. #			
Vz11	SB LEFT TURN FAR	COMB.				V9	1	1		V1	23"
Vz12	SB LEFT TURN	LOCAL				V1	1			V1	23"
Vz21	NB ADVANCE	LOCAL				V2	2			V5	23"
Vz22	NB NEAR	COMB.				V10	2	2		V5	23"
Vz31	WB LEFT TURN FAR	COMB.				V11	3	3		V3	23"
Vz32	WB LEFT TURN	LOCAL				V3	3			V3	23"
Vz41	EB ADVANCE	LOCAL				V4	4			V7	23"
Vz42	EB NEAR	COMB.				V12	4	4		V7	23"
Vz51	NB LEFT TURN FAR	COMB.				V13	5	5		V5	23"
Vz52	NB LEFT TURN	LOCAL				V5	5			V5	23"
Vz61	SB ADVANCE	LOCAL				V6	6			V1	23"
Vz62	SB NEAR	COMB.				V14	6	6		V1	23"
Vz71	EB LEFT TURN FAR	COMB.				V15	7	7		V7	23"
Vz72	EB LEFT TURN	LOCAL				V7	7			V7	23"
Vz81	WB ADVANCE	LOCAL				V8	8			V3	23"
Vz82	WB NEAR	COMB.				V16	8	8		V3	23"
PB2 A&B	HWY. 96 E. LEG	PED.				P2	2				
PB4 A&B	HWY. 10 S. LEG	PED.				P4	4				
PB6 A&B	HWY. 10 W. LEG	PED.				P6	6				
PB8 A&B	HWY. 10B N. LEG	PED.				P8	8				
					SPARE						

CONTROLLER INPUT ABBREVIATIONS:
V = VEHICLE INPUT
D = SYSTEM OR AUXILIARY INPUT
P = PEDESTRIAN INPUT

NOTE: "AMP CHN =" REFERS TO THE RACK OUTPUT POSITION.
THIS IS WIRED TO CONTROLLER INPUT DETECTOR NUMBER WHICH IS PROGRAMMED TO ACTUATE THE DESIGNATED PHASE.
EXAMPLE: V9 = SYSTEM DETECTOR 1, V10 = SYSTEM DETECTOR 2

INTERVAL CHART

SIGNAL FACES	HIGHWAY 10/HIGHWAY 96 AND HIGHWAY 10/HIGHWAY 10B																FLASH SEQUENCE
	1+5	CLR.	1+6	CLR.	2+5	CLR.	2+6	CLR.	3+7	CLR.	3+8	CLR.	4+7	CLR.	4+8	CLR.	
1	~~G~~	*	~~G~~	*	~~FY~~	***	~~FY~~	***	~~R~~	~~R~~	~~R~~	~~R~~	~~R~~	~~R~~	~~R~~	~~R~~	~~R~~
2, 3 & 13	R	R	G	**	R	R	G	**	R	R	R	R	R	R	R	R	R
4	~~R~~	~~R~~	~~R~~	~~R~~	~~R~~	~~R~~	~~R~~	~~R~~	~~G~~	*	~~G~~	*	~~FY~~	***	~~FY~~	***	~~R~~
5, 6 & 14	R	R	R	R	R	R	R	R	R	R	G	**	R	R	G	**	R
7	~~G~~	*	~~FY~~	***	~~G~~	*	~~FY~~	***	~~R~~	~~R~~	~~R~~	~~R~~	~~R~~	~~R~~	~~R~~	~~R~~	~~R~~
8, 9 & 15	R	R	R	R	G	**	G	**	R	R	R	R	R	R	R	R	R
10	~~R~~	~~R~~	~~R~~	~~R~~	~~R~~	~~R~~	~~R~~	~~R~~	~~G~~	*	~~FY~~	***	~~G~~	*	~~FY~~	***	~~R~~
11, 12 & 16	R	R	R	R	R	R	R	R	R	R	R	R	G	**	G	**	R
17 & 18	DW	DW	W	FDW	DW	DW	W	FDW	DW	DW	DW	DW	DW	DW	DW	DW	BLK
19 & 20	DW	DW	DW	DW	DW	DW	DW	DW	DW	DW	W	FDW	DW	DW	W	FDW	BLK
21 & 22	DW	DW	DW	DW	W	FDW	W	FDW	DW	DW	DW	DW	DW	DW	DW	DW	BLK
23 & 24	DW	DW	DW	DW	DW	DW	DW	DW	DW	DW	DW	DW	W	FDW	W	FDW	BLK

* DENOTES GREEN OR YELLOW ARROW DEPENDING ON NEXT PHASE
** DENOTES GREEN OR YELLOW BALL DEPENDING ON NEXT PHASE
*** DENOTES FLASHING YELLOW ARROW OR YELLOW ARROW DEPENDING ON NEXT PHASE

DATE: 09-08-2023 FILE NAME: t040861_01.dgn

LOCATION: HWY. 10/HWY. 96 AND HWY. 10/HWY. 10B
CITY: GREENWOOD
COUNTY: SEBASTIAN
DISTRICT: 04 SCALE: N/A DRAWN BY: GWE

DATE REVISED	DATE REVISED	FED.RD. DIST.NO.	STATE	JOB NO.	SHEET NO.	TOTAL SHEETS
		6	ARK	040861	130	291
		JUNCTION BOX ELECTRICAL DETAILS				

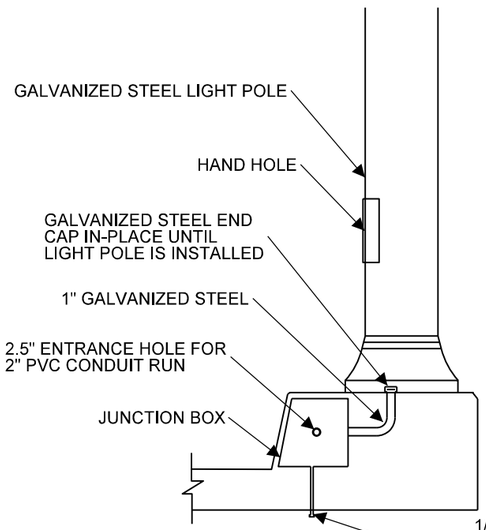

NOTES

1. ALL HARDWARE SHALL BE CORROSION RESISTANT GALVANIZED RIGID STEEL
2. USE SWEEP 90 DEGREE FOR ALL CONDUIT BEND INSIDE THE BUMP-OUT.
3. HAND RAIL SHALL NOT BE SECURED ON TOP OF THE JUNCTION BOX
4. 1" END CAP SHALL BE SUBSIDIARY TO THE 1" CONDUIT

1/2" SCHEDULE 40 PVC CONDUIT WITH 3" PROTRUTION, BREATHER TYPE DRAIN PLUG THROUGH BRIDGE SHALL BE APPLIED AND SUBSIDIARY TO ALL JUNCTION BOXES.

1 DETAIL CONDUIT RUN IN CONCRETE BUMPOUT AT CURB
NOT TO SCALE

NOTE:

1. 2" END CAP SHALL BE SUBSIDIARY TO 2" PVC CONDUIT.

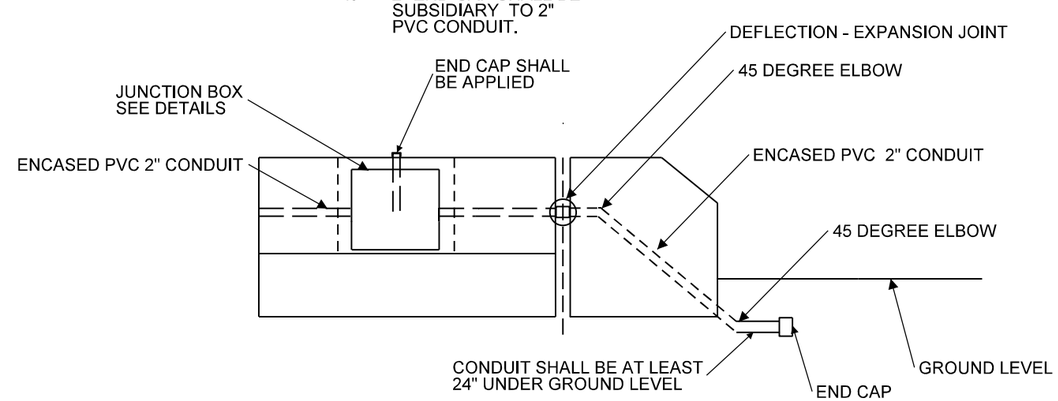

2 DETAIL CONDUIT RUN IN CONCRETE BUMPOUT AT CURB - SIDE VIEW
NOT TO SCALE

STATE OF ARKANSAS REGISTERED PROFESSIONAL ENGINEER No. 13856 DERIC M. WYATT

Sep 27 2023 2:53 PM

DocuSign

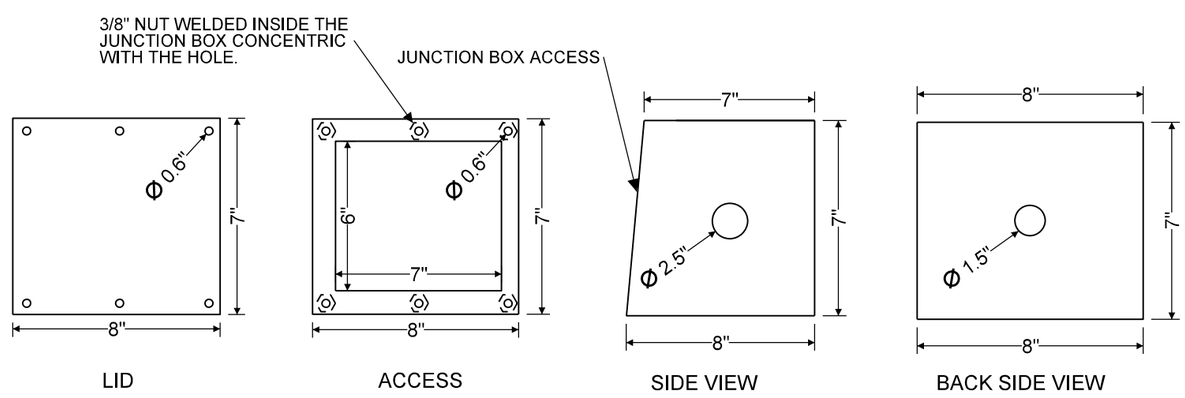

JUNCTION BOX NOTES

1. JUNCTION BOX AND LID MATERIAL SHALL BE NEMA 4X STAINLESS STEEL. FASTENERS SHALL BE 3/8". THE JUNCTION BOXES SHALL BE ADEQUATELY ANCHORED TO THE PARAPET BY MEANS OF AN APPROVED MECHANICAL DEVICE.
2. JUNCTION BOXES SHALL NOT INTERFERE WITH SLIDER PLATES OR EXPENSION JOINTS. PROVIDE AT LEAST 1/2" MIN. DIAMETER DRAINAGE HOLE NEAR THE BOTTOM OF THE JUNCTION BOX.
3. NEMA 4X STAINLESS STEEL CONSTRUCTION WITH GASKET, RECESSED IN PARAPET WALL.
4. INSTALL PULLWIRE IN EACH CONDUIT, SECURED TO PREVENT SLIPPING INTO CONDUIT END.

3 JUNCTION BOX DETAIL VIEWS
NOT TO SCALE

DATE REVISED	DATE REVISED	FED.RD. DIST.NO.	STATE	JOB NO.	SHEET NO.	TOTAL SHEETS
		6	ARK	040861	131	291
		JUNCTION BOX ELECTRICAL DETAILS				

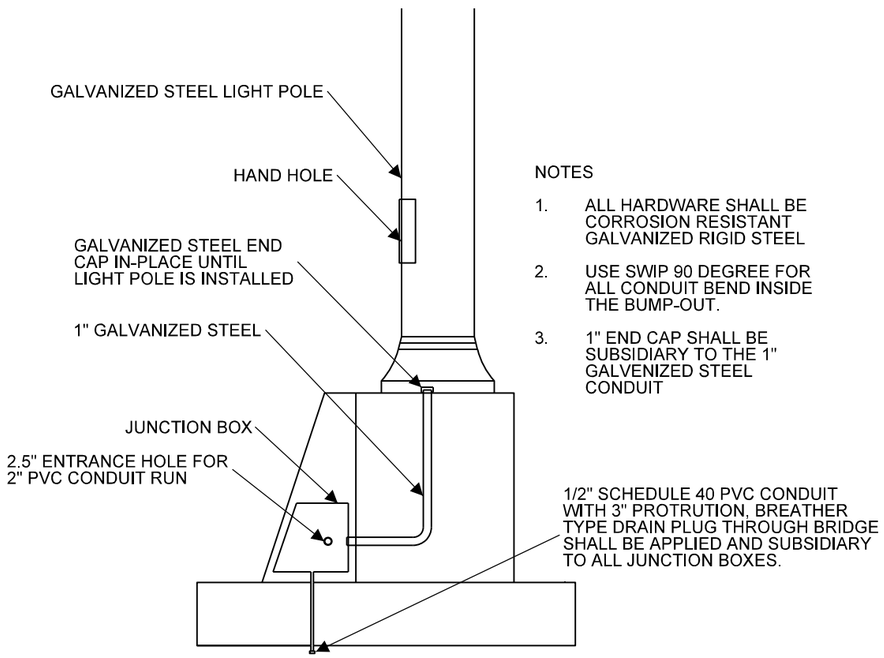

NOTES

1. ALL HARDWARE SHALL BE CORROSION RESISTANT GALVANIZED RIGID STEEL
2. USE SWIP 90 DEGREE FOR ALL CONDUIT BEND INSIDE THE BUMP-OUT.
3. 1" END CAP SHALL BE SUBSIDIARY TO THE 1" GALVENIZED STEEL CONDUIT

1 DETAIL CONDUIT RUN IN CONCRETE BUMPOUT AT BRIDGE RAIL
NOT TO SCALE

NOTE:

1. 2" END CAP SHALL BE SUBSIDIARY TO 2" PVC CONDUIT.

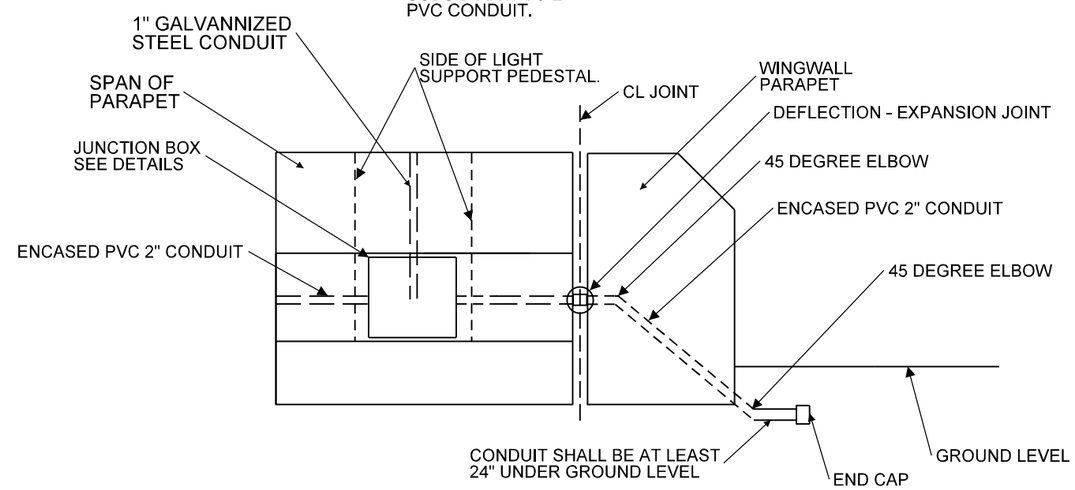

2 DETAIL CONDUIT RUN IN CONCRETE BUMPOUT AT BRIDGE RAIL - SIDE VIEW
NOT TO SCALE

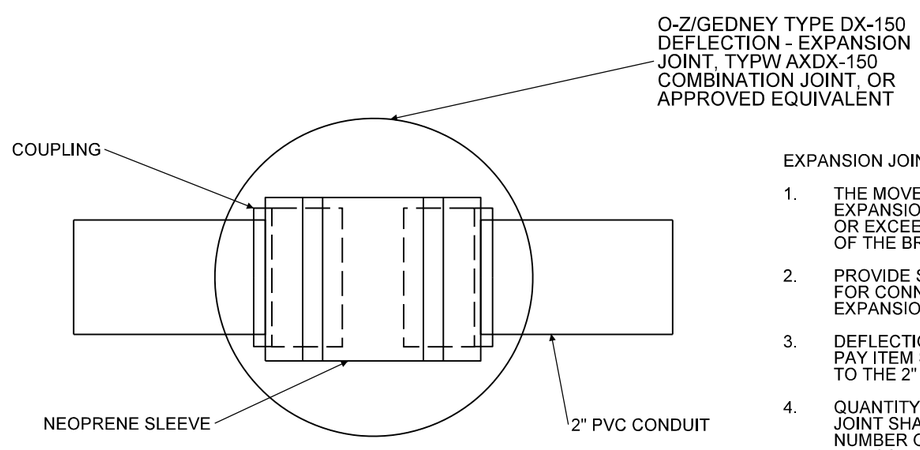

EXPANSION JOINT NOTES:

1. THE MOVEMENT RANGE OF THE EXPANSION JOINT SHALL MEET OR EXCEED THE MOVEMENT RANGE OF THE BRIDGE EXPANSION JOINTS.
2. PROVIDE STANDARD PVC ADAPTORS FOR CONNECTIONS AT EACH END OF EXPANSION JOINT.
3. DEFLECTION - EXPANSION JOINT PAY ITEM SHALL BE SUBSIDIARY TO THE 2" CONDUIT PAY ITEM.
4. QUANTITY OF DEFLECTION - EXPANSION JOINT SHALL BE EQUIVALENT TO THE NUMBER OF BRIDGE EXPANSIONS TIME THE CONDUIT RUNS.

3 CONDUIT DEFLECTION - EXPANSION JOINT
NOT TO SCALE

STATE OF ARKANSAS
REGISTERED PROFESSIONAL ENGINEER
DERIC M. WYATT

Sep 27 2023 2:54 PM

DocuSign

DATE REVISED	DATE REVISED	FED.RD. DIST.NO.	STATE	JOB NO.	SHEET NO.	TOTAL SHEETS
		6	ARK	040861	132	291
		ITS QUANTITY SHEET				

STATE OF ARKANSAS
REGISTERED PROFESSIONAL ENGINEER
No. 13356
DERIC M. WYATT

Sep 27 2023 2:54 PM

DocuSign

ITEM NUMBER	ITEM DESCRIPTION	QUANTITY	UNIT
709	GALVENIZED STEEL CONDUIT (1")	48	LIN.FT
710	NON-METALLIC CONDUIT (2")	1000	LIN.FT
SP	NEMA 4X STAINLESS STEEL JUNCTION BOX	12	EACH

GENERAL NOTES

BENCHMARK: Vertical Control data are shown on the Survey Control Data Sheets.

CONSTRUCTION SPECIFICATIONS: Arkansas State Highway and Transportation Department Standard Specifications for Highway Construction (2014 edition) with applicable Supplemental Specifications and Special Provisions. Section and Subsection refer to the Standard Construction Specifications unless otherwise noted in the Plans.

DESIGN SPECIFICATIONS: AASHTO LRFD Bridge Design Specifications, Ninth Edition (2020).

LIVE LOADING: HL-93

SEISMIC ZONE: 1 SD1: 0.127 SITE CLASS: D

SEISMIC OPERATIONAL CLASSIFICATION: Other

MATERIALS AND STRENGTHS:

Class S(AE) Concrete (superstructure)	f'c = 4,000 psi
Class S Concrete (substructure)	f'c = 3,500 psi
Reinforcing Steel (AASHTO M 31 or M 322, Type A)	fy = 60,000 psi
Structural Steel (ASTM A709, Gr. 50 or 50W)	Fy = 50,000 psi
Structural Steel (ASTM A709, Gr. 36)	Fy = 36,000 psi

BORING LOGS: Boring logs may be obtained from the Construction Contract Development Section of the Program Management Division.

STEEL PILING: Piling at end bents shall be HP14x73 (Grade 50) and shall be driven with a single-acting diesel hammer to meet the requirement of the "PILE BEARING TABLE". Piling at intermediate bents shall be HP16x121 (Grade 50) or HP18x135 (Grade 50) and shall be driven with a single-acting diesel hammer to meet the requirement of the "PILE BEARING TABLE". All piling shall be driven into the material designated as slightly weathered to unweathered shale or slightly weathered to unweathered shale with frequent sandstone partings on the boring legend. The nominal driving resistance shall be determined by the FHWA Modified Gates Formula. See Special Provision "Driven Piling by Method A" for additional information. Minimum penetration shall be 10' below bottom of cap for all piles in end bents. Piling in end bents shall be driven after embankment to bottom of cap is in place. Lengths of piling shown are for estimating quantities and for use in determining payment for cut-off and build-up in accordance with Section 805. Actual pile lengths are to be determined in the field. The Contractor shall use approved steel H-Pile driving points on all piles.

PREBORING: Preboring is required for all piles except for piles at the ends of the wings. The depth of preboring shall be to a depth sufficient to provide the specified minimum penetration and to a minimum 4' depth for end bent piling and to a minimum 5' depth for intermediate bent piling into material designated as slightly weathered to unweathered shale or slightly weathered to unweathered shale with frequent sandstone partings on the boring legend, whichever is lower. The actual size and depth of preboring shall be determined in the field by the Engineer and quantities shown are for estimating and bidding purposes only. The Contractor shall be responsible for keeping prebored holes free of debris prior to driving piles and backfilling which may require the use of temporary casings or other approved methods. After driving is completed, the prebored hole shall be backfilled with Class S Concrete to the top of the rock and the remaining length backfilled in accordance with Subsection 805.08(a). Any related cost for backfilling and temporary casing will not be paid for directly, but shall be considered subsidiary to the item "Preboring".

PILE ENCASEMENT: Pile encasement for Intermediate Bents shall extend from bottom of cap to 3' below natural or finished ground, whichever is lower. See Dwg. No. 66944 for additional information.

PAINTING: The following weathering steel surfaces shall be painted as specified in Section 807:

All steel surfaces within [see "PAINTED ZONE LENGTH TABLE"] feet of bridge deck expansion joints, including diaphragms, cross-frames, connection bolts and bearings.

All steel surfaces exposed to the outside face of the bridge, including outside faces & bottom of the exterior beams or girders, splice plates and bolts, stiffeners, drip plates, and bearings. ASTM F3125, Grade A325 Type 3 bolts shall be used within these painted zones and shall be painted.

Galvanized members, the expansion device, and surfaces in contact with concrete shall not be painted.

The color of paint shall be Brown equal or close to Federal Std. 595B, Color Chip No. 30070 and as approved by the Engineer.

The finish system may be applied in the shop. Any damage to the paint system occurring during transport or installation shall be corrected according to the manufacturer's recommendations at no cost to the Department.

POWDER COATING: All metal bridge railing shall receive a powder coating finish. The color of paint shall be black equal or close to Federal Std. 595B, Color Chip No. 27038 and as approved by the Engineer. See Std. Dwg. No. 55015, Dwg. No. 66949, and Dwg. No. 66950 for additional information.

TEXTURED COATING FINISH: Class 3 Textured Coating Finish shall be applied to the bridge surfaces as specified in Special Provision "Textured Coating Finish", as noted on the plans, and in accordance with Subsection 802.19(b)(3). Textured Coating Finish shall not be applied on surfaces where Class 2 Protective Surface Treatment is applied.

BRIDGE DECK: The concrete bridge deck, except sidewalks and side paths, shall be given a tine finish as specified for final finishing in Subsection 802.19 for Class 5 Tined Bridge Roadway Surface Finish. Sidewalks and side paths shall be given a Class 6 Broomed Finish.

PROTECTIVE SURFACE TREATMENT: Class 2 Protective Surface Treatment shall be applied to the roadway surface, sidewalk surface (including curbing), side path surface, and to the roadway face and top of the concrete bridge rails in accordance with Section 803.

ADDITIONAL GENERAL NOTES FOR BRIDGE NO. 07644

EXISTING BRIDGE: Existing Bridge No. A0424 (Log Mile 0.45) is 43.8' wide (32.5' clear roadway) and 217.0' long and consists of R.C.D.G. and R.C. Slab (widened portion) spans and is supported by concrete abutments and pile end bents (widened portion) and multi-column intermediate bents on spread footings. The existing bridge is located on the same alignment as the proposed new bridge. Plans of the existing structure, if available, may be obtained upon request to the Construction Contract Development Section of the Program Management Division.

REMOVAL AND SALVAGE: After the new Hwy. 10 alignment is open to traffic, the Contractor shall remove existing Bridge No. A0424, including dumped riprap, in accordance with Section 205. Removal of dumped riprap will not be paid for directly but shall be considered subsidiary to the item "Removal of Existing Bridge Structure (Site No. _)". All material from the existing bridge shall become the property of the Contractor except the following which shall remain the property of the State:

Metal Bridge Railing and Posts

The Contractor shall notify the Department prior to removal to determine specific pieces deemed salvageable. The Contractor shall provide temporary storage and on-site loading onto ARDOT equipment for removal of salvage items from the site. This work shall be considered incidental to the item "Removal of Existing Bridge Structure (Site No. _)".

MAINTENANCE OF TRAFFIC: The road will be closed during the construction of this bridge.

ADDITIONAL GENERAL NOTES FOR BRIDGE NO. 07645

EXISTING BRIDGE: Existing Bridge No. A0425 (Log Mile 0.45) is 43.8' wide (32.2' clear roadway) and 108.0' long and consists of R.C.D.G. and R.C. Slab (widened portion) spans and is supported by concrete abutments and pile end bents (widened portion) and multi-column intermediate bents on spread footings. The existing bridge is located on the same alignment as the proposed new bridge. Plans of the existing structure, if available, may be obtained upon request to the Construction Contract Development Section of the Program Management Division.

REMOVAL AND SALVAGE: After the new Hwy. 10 alignment is open to traffic, the Contractor shall remove existing Bridge No. A0425, including dumped riprap, in accordance with Section 205. Removal of dumped riprap will not be paid for directly but shall be considered subsidiary to the item "Removal of Existing Bridge Structure (Site No. _)". All material from the existing bridge shall become the property of the Contractor except the following which shall remain the property of the State:

Metal Bridge Railing and Posts

The Contractor shall notify the Department prior to removal to determine specific pieces deemed salvageable. The Contractor shall provide temporary storage and on-site loading onto ARDOT equipment for removal of salvage items from the site. This work shall be considered incidental to the item "Removal of Existing Bridge Structure (Site No. _)".

MAINTENANCE OF TRAFFIC: The road will be closed during the construction of this bridge.

PILE BEARING TABLE

PILE	REQUIRED MINIMUM NOMINAL DRIVING RESISTANCE (TONS)
HP14x73	429
HP16x121	525
HP18x135	639

PAINTED ZONE LENGTH TABLE

BRIDGE NO.	DISTANCE (FT.)
07641	6
07642	7
07643	8
07644	6
07645	7

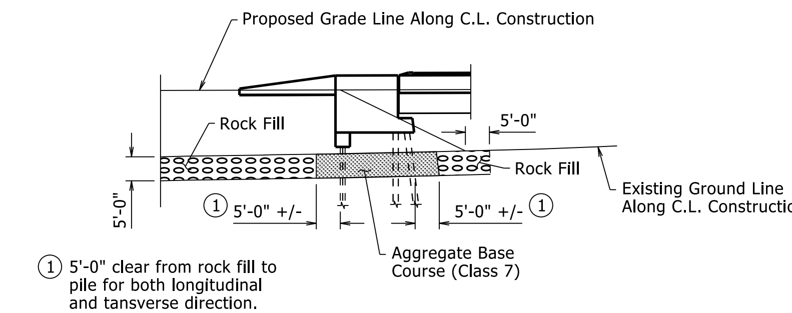

DETAIL A

Where rock fill is used for embankment construction, aggregate base course (Class 7) in accordance with Subsection 303.02, shall be placed as shown in areas where piling will be located. Aggregate base course (Class 7) shall be paid for as "Rock Fill".

Limits of rock fill shall begin 100 feet from the slope intercept and extend 5 feet beyond the toe of fill slopes (end and side slopes), except at the beginning of Bridge No. 07641 where the rock fill shall begin at Station 204+95.

STATE OF ARKANSAS LICENSED PROFESSIONAL ENGINEER No. 9235 9/22/23 CHARLES R. ELLIS

BRIDGE ENGINEER

COMMON LAYOUT NOTES
HWY. 10 - HWY. 96 (GREENWOOD BYPASS) (S)
SEBASTIAN COUNTY

ROUTE 10 SEC. 0 & 1

ARKANSAS STATE HIGHWAY COMMISSION
LITTLE ROCK, ARK.

DRAWN BY: JYP DATE: 9/6/2022 FILENAME: b040861_c1.dgn
CHECKED BY: JSQ DATE: 9/14/2023 SCALE: No Scale
DESIGNED BY: CNL DATE: 7/1/2022

BRIDGE NO. SEE TABLE DRAWING NO. 66873

PRINT DATE: 9/22/2023

DATE REVISED	DATE REVISED	FED. RD. DIST. NO.	STATE	JOB NO.	SHEET NO.	TOTAL SHEETS
		6	ARK.	040861	134	291
		07641		- LAYOUT -		66874

For R/W Data, see Roadway Plans.

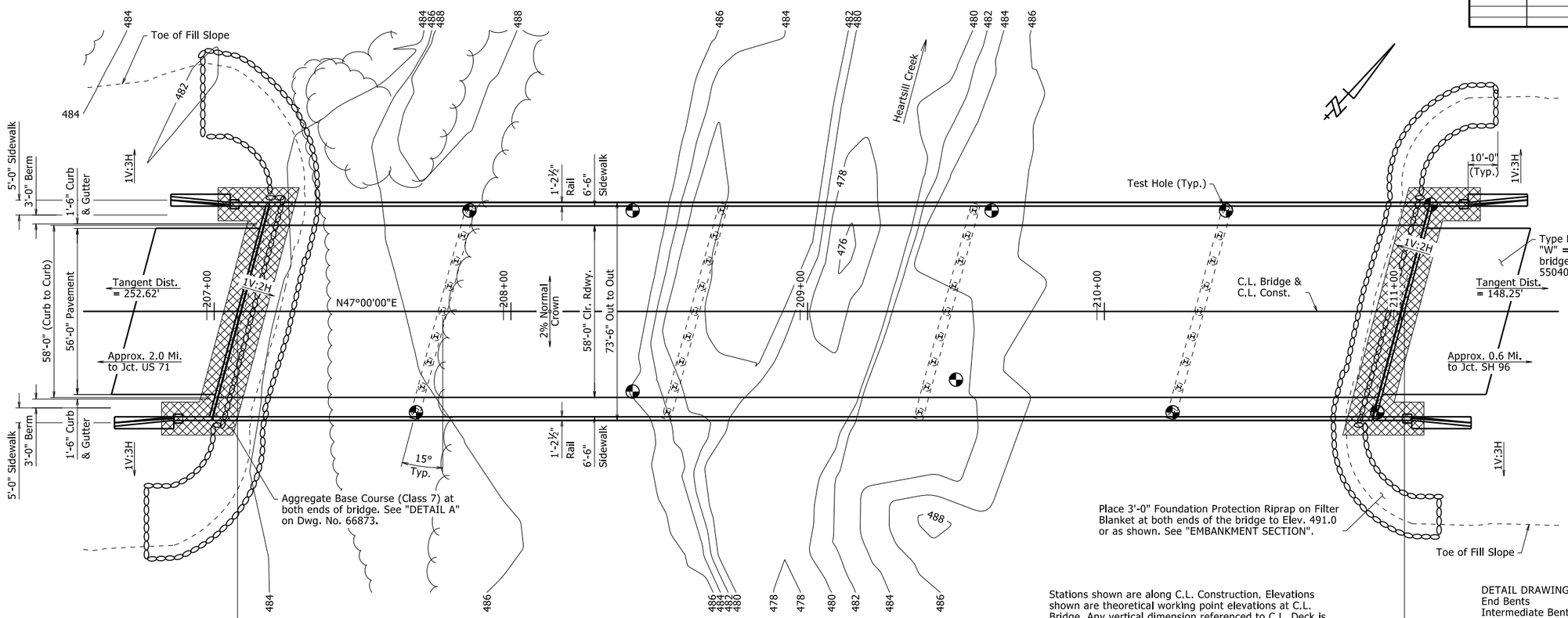

PLAN

Stations shown are along C.L. Construction. Elevations shown are theoretical working point elevations at C.L. Bridge. Any vertical dimension referenced to C.L. Deck is based on theoretical working point elevation at C.L. Bridge. See "ROUNDING DETAIL" on Standard Drawing Number 55007 for additional information.

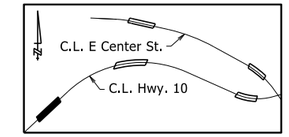

LOCATION SKETCH

No Scale

DETAIL DRAWINGS:	DRAWING NO(S).
End Bents	66877-66879 & 66939-66942
Intermediate Bents	66880 & 66943
Steel H-Piling	66944
Elastomeric Bearings	66945-66946
391'-0" Continuous W-Beam Unit	66881-66884 & 66947-66948
General Notes For Steel Bridge Structures	55006
Details For Steel Bridge Structures	55007
Poured Silicone Joints	55008
Transitional Approach Railing	55013A
Type H2 Railing	55015
Bridge Traffic Rail	55070

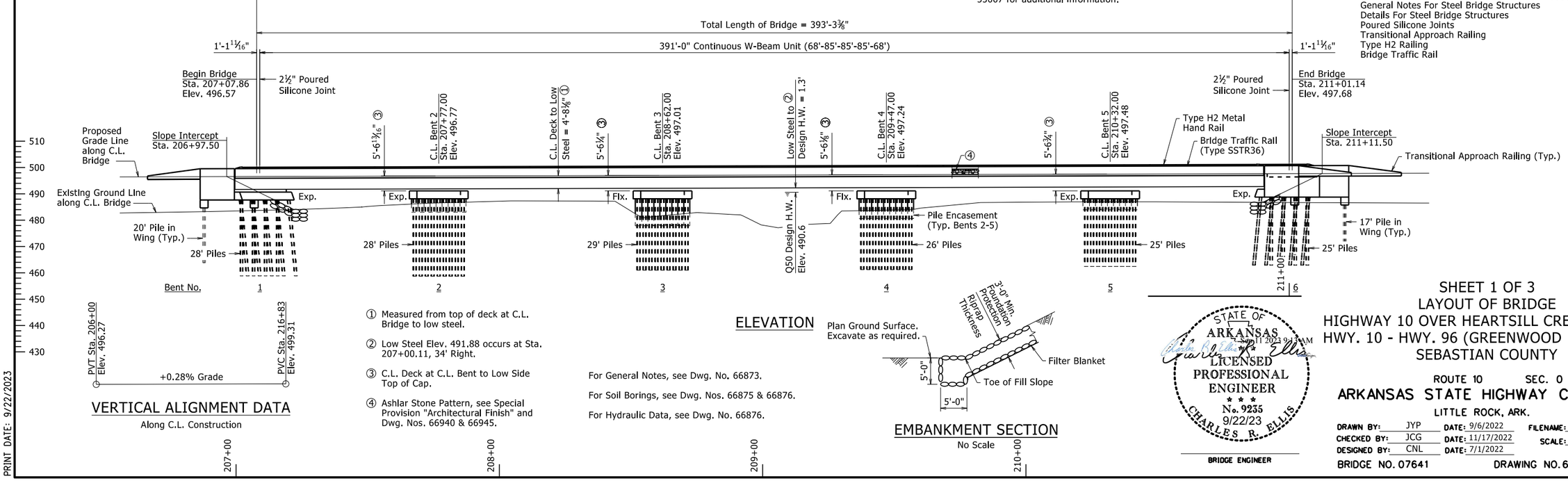

ELEVATION

VERTICAL ALIGNMENT DATA

Along C.L. Construction

① Measured from top of deck at C.L. Bridge to low steel.

② Low Steel Elev. 491.88 occurs at Sta. 207+00.11, 34' Right.

③ C.L. Deck at C.L. Bent to Low Side Top of Cap.

④ Ashlar Stone Pattern, see Special Provision "Architectural Finish" and Dwg. Nos. 66940 & 66945.

For General Notes, see Dwg. No. 66873.

For Soil Borings, see Dwg. Nos. 66875 & 66876.

For Hydraulic Data, see Dwg. No. 66876.

EMBANKMENT SECTION

No Scale

STATE OF ARKANSAS
LICENSED PROFESSIONAL ENGINEER
No. 9235
9/22/23
CHARLES R. ELLIS
BRIDGE ENGINEER

SHEET 1 OF 3
LAYOUT OF BRIDGE
HIGHWAY 10 OVER HEARTSILL CREEK (SITE 1)
HWY. 10 - HWY. 96 (GREENWOOD BYPASS) (S)
SEBASTIAN COUNTY

ROUTE 10 SEC. 0

ARKANSAS STATE HIGHWAY COMMISSION

LITTLE ROCK, ARK.

DRAWN BY:	JYP	DATE: 9/6/2022	FILENAME:	b040861x1_L1.dgn	
CHECKED BY:	JCG	DATE: 11/17/2022	SCALE:	1" = 20' or As Noted	
DESIGNED BY:	CNL	DATE: 7/1/2022			

BRIDGE NO. 07641 DRAWING NO. 66874

PRINT DATE: 9/22/2023

DATE REVISED	DATE REVISED	FED. RD. DIST. NO.	STATE	JOB NO.	SHEET NO.	TOTAL SHEETS
		6	ARK.	040861	135	291
		07641		- LAYOUT -		66875

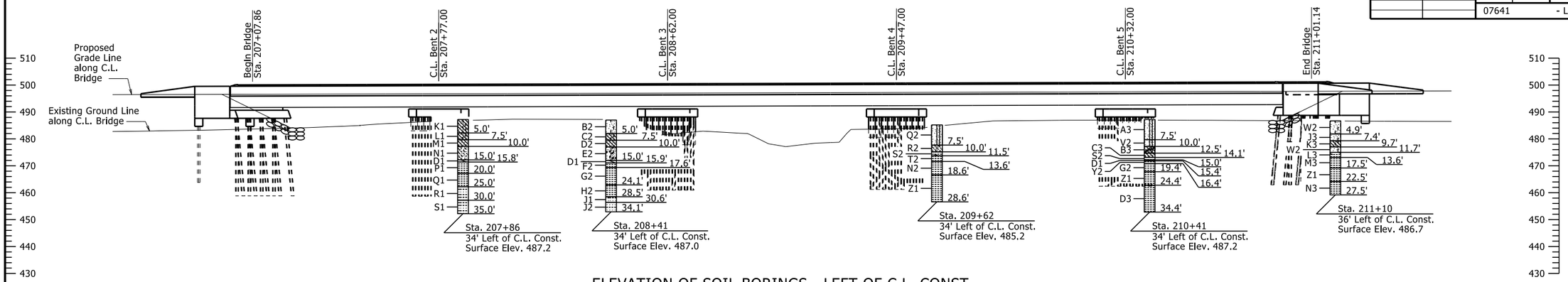

ELEVATION OF SOIL BORINGS - LEFT OF C.L. CONST.

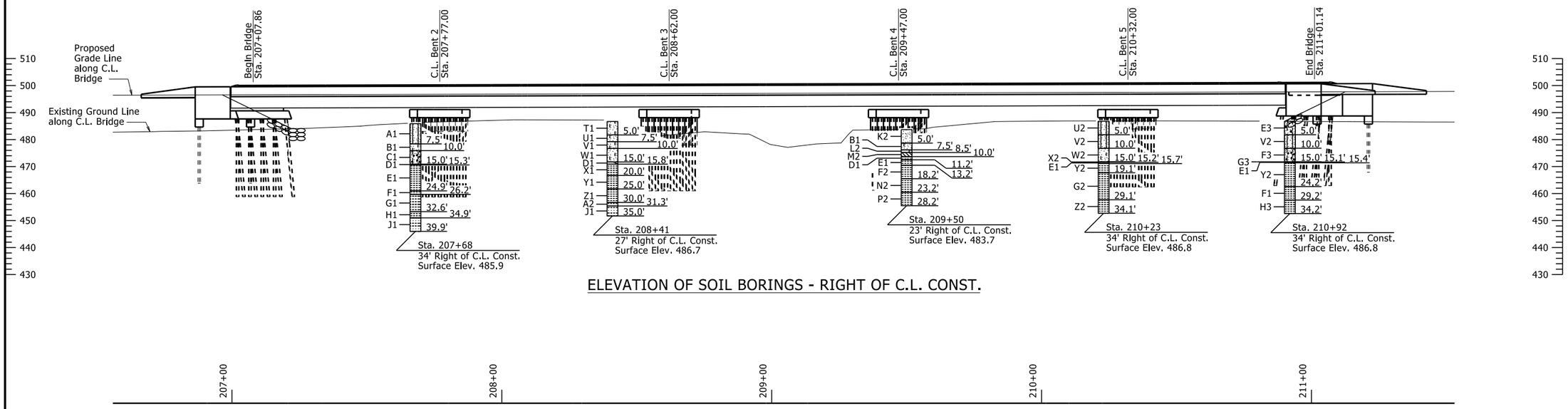

ELEVATION OF SOIL BORINGS - RIGHT OF C.L. CONST.

For Boring Legend and "N" Values, see Dwg. No. 66876

STATE OF ARKANSAS
LICENSED PROFESSIONAL ENGINEER
No. 9235
9/22/23
CHARLES R. ELLIS

BRIDGE ENGINEER

SHEET 2 OF 3
LAYOUT OF BRIDGE
HIGHWAY 10 OVER HEARTSILL CREEK (SITE 1)
HWY. 10 - HWY. 96 (GREENWOOD BYPASS) (S)
SEBASTIAN COUNTY

ROUTE 10 SEC. 0

ARKANSAS STATE HIGHWAY COMMISSION

LITTLE ROCK, ARK.

DRAWN BY:	JYP	DATE: 9/6/2022	FILENAME:	b040861x1_L1.dgn	
CHECKED BY:	JCG	DATE: 11/17/2022	SCALE:	1" = 20'	
DESIGNED BY:	CNL	DATE: 7/1/2022			

BRIDGE NO. 07641 DRAWING NO. 66875

PRINT DATE: 9/22/2023

DATE REVISED	DATE REVISED	FED. RD. DIST. NO.	STATE	JOB NO.	SHEET NO.	TOTAL SHEETS
		6	ARK.	040861	136	291
		07641		- LAYOUT -	66876	

BORING LEGEND

A1-Moist, Very Loose, Brown Sandy Silt
B1-Wet, Loose, Brown Silty Sand
C1-Wet, Medium Dense, Silty Sand with Gravel (Sandstone Fragments)
D1-SHALE - Highly Weathered, Medium Hard, Gray
E1-SHALE - Weathered, Medium Hard, Gray
F1-SHALE - Unweathered with Weathered Layers, Medium Hard, Gray
G1-SHALE WITH FREQUENT SANDSTONE PARTINGS AND SEAMS - Unweatherd, Medium Hard with Hard Layers, Frequent Fractures, Gray
H1-SHALE - Unweathered, Medium Hard, Frequent Fractues, Gray
J1-SHALE INTERBEDDED WITH SANDSTONE - Unweathered, Medium Hard with Hard Layers, Gray
K1-Moist, Very Stiff, Brown Silty Clay with Sand
L1-Wet, Medium Stiff, Brown Silty Clay with Sand
M1-Moist, Stiff, Sandy Lean Clay
N1-Moist, Medium Dense, Brown Clayey Sand with Some Gravel (Sandstone Fragments)
P1-SHALE - Weathered, Medium Hard, Frequent Vertical Fractures, Occasional Slickensides, Gray
Q1-SHALE - Unweathered with Weathered Layers, Medium Hard, Gray
R1-SHALE INTERBEDDED WITH SANDSTONE - Unweathered with Weathered Layers, Medium Hard with Hard Layers, Gray
S1-SHALE WITH INTERBEDDED SANDSTONE - Unweathered with Weathered Layers, Medium Hard with Hard Layers, Occasional Fractures, Gray
T1-No sample
U1-Moist, Very Loose, Brown Silty Sand
V1-Wet, Very Loose, Brown Silty Sand
W1-Wet, Very Loose, Brown Silty Sand with Some Gravel
X1-SHALE - Weathered with Highly Weathered Layers, Medium Hard with Soft Layers, Frequent Fractures and Slickensides, Gray
Y1-SHALE - Slightly Weathered with Weathered Layers, Medium Hard, Frequent Fractures, Gray
Z1-SHALE - Unweathered, Medium Hard, Occasional Fractures, Gray
A2-SANDSTONE INTERBEDDED WITH SHALE - Unweathered, Well Cemented, Gray
B2-Moist, Loose, Brown Silty Sand
C2-Moist, Soft, Brown Sandy Silty Clay
D2-Moist, Very Soft, Brown Lean Clay with Sand
E2-Wet, Medium Dense, Brown Poorly Graded Sand with Silt and Gravel (Sandstone Fragments)
F2-SHALE - Slightly Weathered, Medium Hard, Occasional Fractures, Gray
G2-SHALE - Unweathered, Medium Hard, Gray
H2-SHALE - Unweathered with Occasional Weathered Layers, Medium Hard, Gray
J2-SANDSTONE WITH FREQUENT SHALE PARTINGS AND SEAMS - Unweathered, Well Cemented, Gray
K2-Moist, Loose, Brown Sand
L2-Wet, Medium Dense, Brown Silty Sand
M2-Wet, Very Stiff, Brown Clay
N2-SHALE - Slightly Weathered, Medium Hard, Frequent Fractures, Gray
P2-SHALE - Slightly Weathered, Medium Hard, Frequent Fractures and Slickensides, Gray
Q2-Moist, Loose, Brown Sandy Silt
R2-Wet, Medium Dense, Brown Silty Clayey Sand
S2-SHALE - Highly Weathered, Soft, Gray
T2-SHALE - Weathered, Medium Hard, Frequent Fractures, Gray
U2-Moist, Loose, Brown Silt with Sand
V2-Moist, Medium Dense, Brown Sandy Silt
W2-Moist, Medium Dense, Brown Silty Sand
X2-Wet, Dense, Brown Sand
Y2-SHALE - Slightly Weathered, Medium Hard, Gray
Z2-SHALE - Unweathered with Weathered Layers, Medium Hard with Soft Layers, Frequent Fractures and Slickensides, Gray
A3-Moist, Medium Dense, Light Brown Sandy Silt
B3-Moist, Very Stiff, Brown Sandy Silty Clay with Sandstone Fragments
C3-Sandy Clay
D3-SHALE - Unweathered with Weathered Layers, Medium Hard, Frequent to Occasional Fractures, Gray
E3-Moist, Medium Dense, Brown Silt with Sand and Organic Matter (Wood)
F3-Moist, Medium Dense, Brown Silty Sand with Rock Fragments
G3-Moist, Very Dense, Brown Sand
H3-SHALE - Unweathered with Weathered Layers, Medium Hard, Frequent Fractures, Gray
J3-Moist, Dense, Brown Silty Sand
K3-Moist, Very Stiff, Brown and Gray Sandy Silty Clay
L3-SHALE - Highly Weathered with Weathered, Layers, Medium Hard with Soft Layers, Frequent Fractures, Gray
M3-SHALE - Slightly Weathered, Medium Hard with Soft Layers, Frequent Fractures, Gray
N3-SHALE - Unweathered with Weathered Layers, Medium Hard with Soft Layers, Frequent Fractures, Gray

"N" VALUES

Sta. 207+86 - 34' Left of C.L. Const.
3.0- 4.0,N=17
5.5- 6.5,N=6
8.0- 9.0,N=10
10.5- 11.5,N=15
15.5- 15.8,N=50(10")

Sta. 207+68 - 34' Right of C.L. Const.
3.0- 4.0,N=3
5.5- 6.5,N=0
8.0- 9.0,N=7
10.5- 11.5,N=12
15.0- 15.3,N=50(4")

Sta. 208+41 - 34' Left of C.L. Const.
3.0- 4.0,N=6
5.5- 6.5,N=4
8.0- 9.0,N=0
10.5- 11.5,N=16
15.5- 15.9,N=35(5")

Sta. 208+41 - 27' Right of C.L. Const.
3.0- 4.0,N=0
5.5- 6.5,N=0
8.0- 9.0,N=0
10.5- 11.5,N=4
15.5- 15.8,N=40(4")

Sta. 209+62 - 34' Left of C.L. Const.
3.0- 4.0,N=8
5.5- 6.5,N=5
8.0- 9.0,N=15
10.5- 11.5,N=84

Sta. 209+50 - 23' Right of C.L. Const.
3.0- 4.0,N=5
5.5- 6.5,N=5
8.0- 9.0,N=16
10.5- 11.2,N=61(9")

Sta. 210+41 - 34' Left of C.L. Const.
3.0- 4.0,N=15
5.5- 6.5,N=17
8.0- 9.0,N=14
10.5- 11.5,N=24
15.0- 15.3,N=50(4")

Sta. 210+23 - 34' Right of C.L. Const.
3.0- 4.0,N=9
5.5- 6.5,N=13
8.0- 9.0,N=15
10.5- 11.5,N=14
15.7- 15.9,N=40(2")

Sta. 211+10 - 36' Left of C.L. Const.
3.0- 4.0,N=19
5.4- 6.4,N=35
7.9- 8.9,N=23
10.2- 11.2,N=27
12.2- 13.0,N=119(10")

Sta. 210+92 - 34' Right of C.L. Const.
3.0- 4.0,N=12
5.5- 6.5,N=15
8.0- 9.0,N=13
10.5- 11.5,N=14
15.0- 15.4,N=40(5")

HYDRAULIC DATA

FLOOD DESCRIPTION	FREQUENCY	DISCHARGE	①NATURAL WATER SURFACE ELEVATION	WATER SURFACE ELEV. WITH BACKWATER
	YEARS	CFS	FEET	FEET
Design	50	5,845	490.6	490.6
Base	100	6,935	491.2	491.2
Extreme	500	10,276	491.9	491.9
Overtopping	>500	-	-	-

① Unconstricted water surface elevation without structure or roadway approaches.

Q100 backwater elevation for existing structure = N/A
Proposed Low Bridge Chord elevation = 491.88 ft.

Drainage Area = 9.38 square miles
Historical H.W. Elev. = N/A

STATE OF ARKANSAS
LICENSED PROFESSIONAL ENGINEER
No. 9235
9/22/23
CHARLES R. ELLIS

BRIDGE ENGINEER

SHEET 3 OF 3
LAYOUT OF BRIDGE
HIGHWAY 10 OVER HEARTSILL CREEK (SITE 1)
HWY. 10 - HWY. 96 (GREENWOOD BYPASS) (S)
SEBASTIAN COUNTY

ROUTE 10 SEC. 0

ARKANSAS STATE HIGHWAY COMMISSION
LITTLE ROCK, ARK.

DRAWN BY: JYP DATE: 9/6/2022
CHECKED BY: JCG DATE: 11/17/2022
DESIGNED BY: CNL DATE: 7/1/2022
FILENAME: b040861x1_L1.dgn
SCALE: 1" = 20'

BRIDGE NO. 07641 DRAWING NO. 66876

PRINT DATE: 9/22/2023

DATE REVISED	DATE REVISED	FED. RD. DIST. NO.	STATE	JOB NO.	SHEET NO.	TOTAL SHEETS
		6	ARK.	040861	137	291
		07641 - END BENTS - 66877				

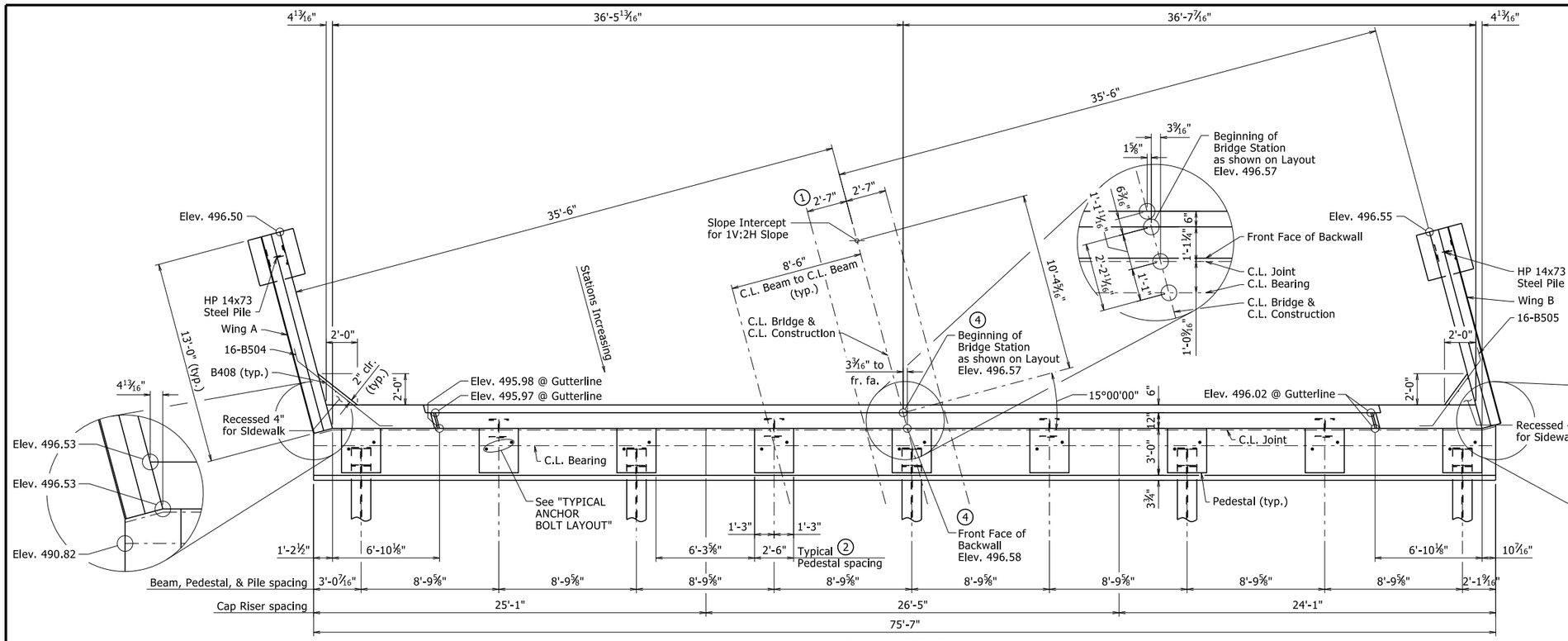

PLAN - BENT 1

¼" = 1'-0"

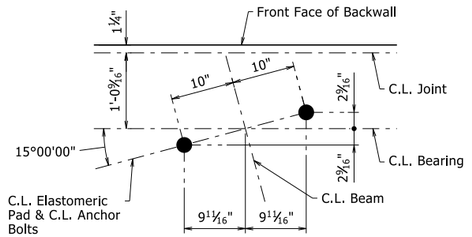

For Details of Elastomeric Bearings, see Dwg. Nos. 66945 & 66946.

TYPICAL ANCHOR BOLT LAYOUT

NO SCALE

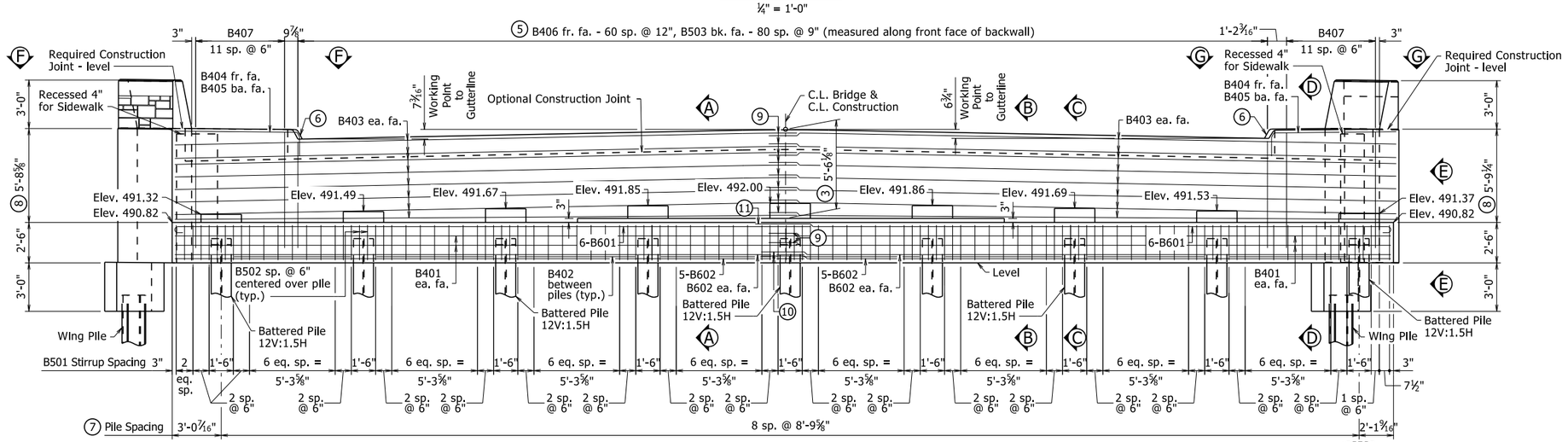

ELEVATION - BENT 1

LOOKING BACK

¼" = 1'-0"

NOTES:

See Dwg. No. 66940 for Wing Views and Sections.

See Dwg. No. 66942 for Three Dimensional View of Wing.

1. See "ROUNDING DETAIL" on Std. Dwg. No. 55007.
2. Pedestals shall be cast level at the elevations shown in "ELEVATION - BENT 1". See Dwg. No. 66939 for "PEDESTAL PLAN" & "TYPICAL PEDESTAL DETAILS".
3. Measured at C.L. Construction at Front Face of Backwall to Working Point.
4. Measured at Working Point.
5. See Dwg. No. 66939 for "SECTION A-A", "SECTION B-B", "SECTION C-C", "SECTION D-D" "VIEW E-E", and Dwg. No. 66879 for "VIEW F-F" & "VIEW G-G" for placement of reinforcing.
6. See Dwg. No. 66939 for "SIDEWALK & CURB DETAIL".
7. See Dwg. No. 66879 for "LAYOUT OF PILES".
8. Measured at beginning of wing.
9. 1'-9" minimum lapped splice length
10. 2'-8" minimum lapped splice length
11. 3'-5" minimum lapped splice length

STATE OF ARKANSAS LICENSED PROFESSIONAL ENGINEER No. 9235 9/22/23 CHARLES R. ELLIS

BRIDGE ENGINEER

SHEET 1 OF 3
DETAILS OF END BENTS
HEARTSILL CREEK (SITE 1)

ROUTE SEC.

ARKANSAS STATE HIGHWAY COMMISSION

LITTLE ROCK, ARK.

DRAWN BY:	CGP	DATE:	07/11/2023	FILENAME:	b040861x1_b1.dgn
CHECKED BY:	WAC	DATE:	08/08/2023	SCALE:	AS NOTED
DESIGNED BY:	PGT	DATE:	07/2023		

BRIDGE NO. 07641 DRAWING NO. 66877

PRINT DATE: 9/22/2023

DATE REVISED	DATE REVISED	FED. RD. DIST. NO.	STATE	JOB NO.	SHEET NO.	TOTAL SHEETS
		6	ARK.	040861	138	291
		07641 - END BENTS - 66878				

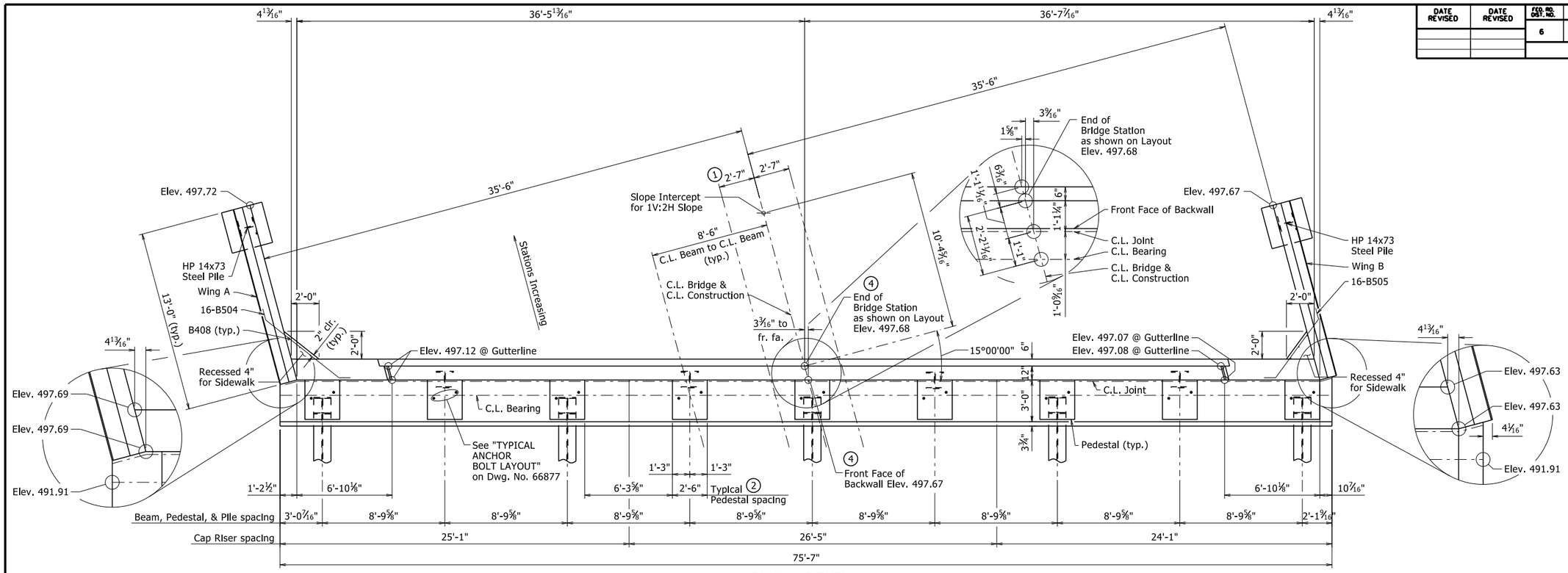

PLAN - BENT 6

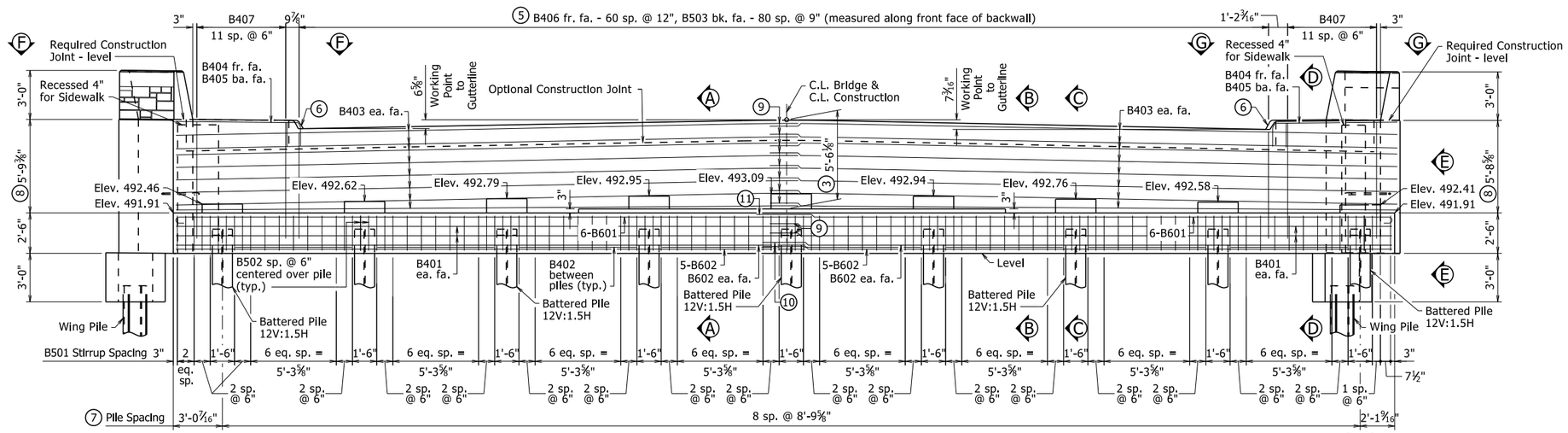

ELEVATION - BENT 6

LOOKING AHEAD

1. See "ROUNDING DETAIL" on Std. Dwg. No. 55007.
2. Pedestals shall be cast level at the elevations shown in "ELEVATION - BENT 6". See Dwg. No. 66939 for "PEDESTAL PLAN" & "TYPICAL PEDESTAL DETAILS".
3. Measured at C.L. Construction at Front Face of Backwall to Working Point.
4. Measured at Working Point.
5. See Dwg. No. 66939 for "SECTION A-A", "SECTION B-B", "SECTION C-C", "SECTION D-D" "VIEW E-E", and Dwg. No. 66879 for "VIEW F-F" & "VIEW G-G" for placement of reinforcing.
6. See Dwg. No. 66939 for "SIDEWALK & CURB DETAIL".
7. See Dwg. No. 66879 for "LAYOUT OF PILES".
8. Measured at beginning of wing.
9. 1'-9" minimum lapped splice length
10. 2'-8" minimum lapped splice length
11. 3'-5" minimum lapped splice length

NOTES:

See Dwg. No. 66940 for Wing Views and Sections.

See Dwg. No. 66942 for Three Dimensional View of Wing.

STATE OF ARKANSAS
9/22/2023 9:00 AM
LICENSED PROFESSIONAL ENGINEER
No. 9235
9/22/23
CHARLES R. ELLIS
BRIDGE ENGINEER

SHEET 2 OF 3
DETAILS OF END BENTS
HEARTSILL CREEK (SITE 1)

ROUTE SEC.

ARKANSAS STATE HIGHWAY COMMISSION

LITTLE ROCK, ARK.

DRAWN BY:	CGP	DATE:	07/11/2023	FILENAME:	b040861x1_b1.dgn
CHECKED BY:	WAC	DATE:	08/08/2023	SCALE:	1/4" = 1'-0"
DESIGNED BY:	PGT	DATE:	07/2023		

BRIDGE NO. 07641 DRAWING NO. 66878

PRINT DATE: 9/22/2023

DATE REVISED	DATE REVISED	FED. RD. DIST. NO.	STATE	JOB NO.	SHEET NO.	TOTAL SHEETS
		6	ARK.	040861	139	291
		07641 - END BENTS - 66879				

BAR LIST - PER BENT

MARK	NO. REQ'D	LENGTH	P.D.
B401	8	38'-6"	Str.
B402	7	7'-3"	Str.
B403	32	38'-8"	2"
B404	2	9'-1"	2"
B405	2	8'-6"	2"
B406	61	8'-11"	2"
B407	24	15'-4"	2"
B408	6	7'-7"	Str.
B409	8	3'-2"	2"
B410	2	5'-4"	2"
B411	2	5'-6"	2"
B412	36	6'-7"	2"
B413	36	6'-11"	2"
B414	14	9'-8"	2"
B501	96	13'-4"	2½"
B502	18	8'-5"	2½"
B503	81	5'-8"	Str.
B504	16	8'-4"	3¾"
B505	16	6'-11"	3¾"
B601	12	40'-0"	4½"
B602	14	39'-0"	Str.
F601	12	2'-8"	Str.
F602	24	11'-5"	4½"
R401E	52	6'-4"	(1)
R402E	16	12'-8"	Str.
W401E	52	3'-11"	(1)
W402	40	16'-5"	2"
W701	68	12'-8"	Str.

BENDING DIAGRAMS

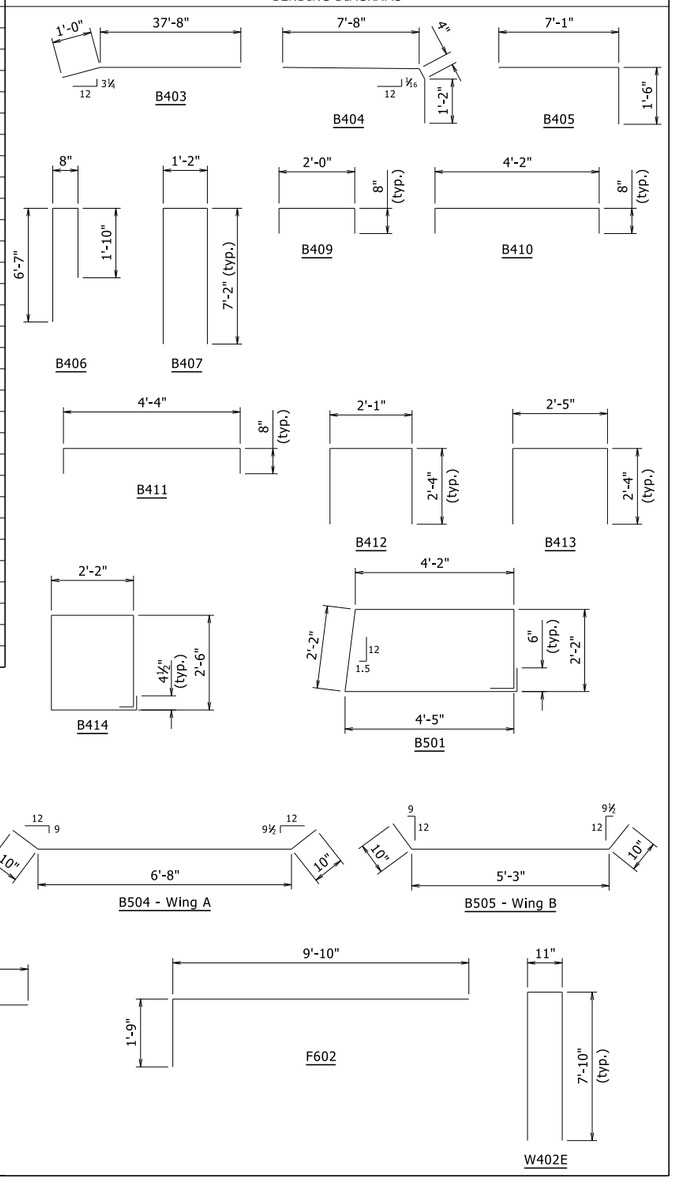

Dimensions are out to out of bars.
Bars with an "E" suffix shall be epoxy coated.

(1) See Std. Dwg. No. 55070 for details of rail reinforcing and location of bars with an "R" prefix & W401E.

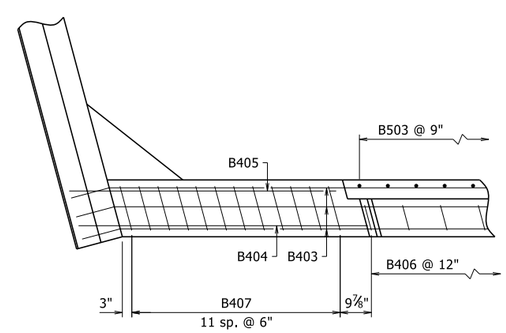

VIEW F-F
½" = 1'-0"

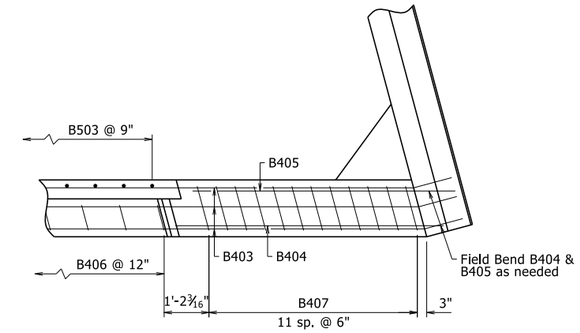

VIEW G-G
½" = 1'-0"

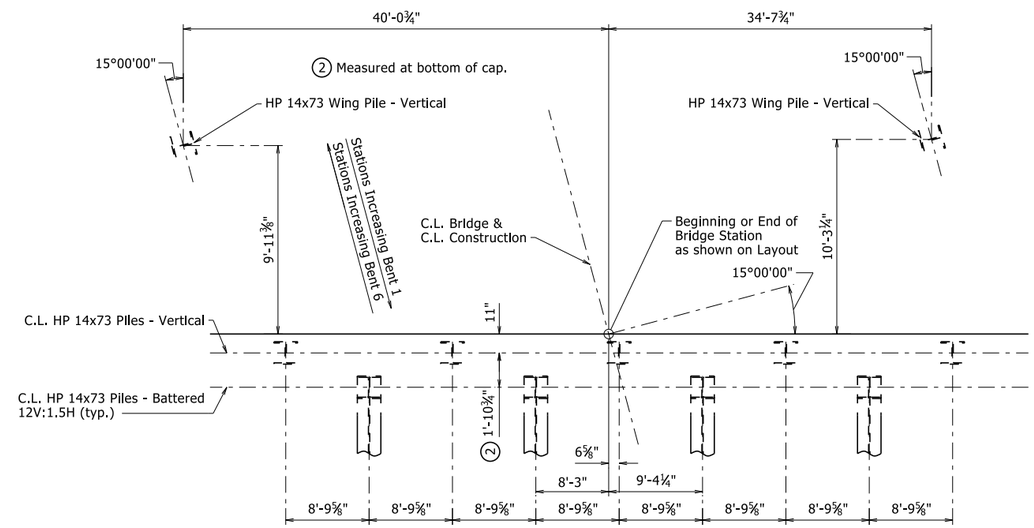

LAYOUT OF PILES
NO SCALE

STATE OF ARKANSAS
LICENSED PROFESSIONAL ENGINEER
No. 9235
9/22/23
CHARLES R. ELLIS

BRIDGE ENGINEER

SHEET 3 OF 3
DETAILS OF END BENTS
HEARTSILL CREEK (SITE 1)

ROUTE SEC.

ARKANSAS STATE HIGHWAY COMMISSION
LITTLE ROCK, ARK.

DRAWN BY: CGP DATE: 07/11/2023
CHECKED BY: WAC DATE: 08/08/2023
DESIGNED BY: PGT DATE: 07/2023
FILENAME: b040861x1_b1.dgn
SCALE: AS NOTED

BRIDGE NO. 07641 DRAWING NO. 66879

PRINT DATE: 9/22/2023

DATE REVISED	DATE REVISED	FED. RD. DIST. NO.	STATE	JOB NO.	SHEET NO.	TOTAL SHEETS
		6	ARK.	040861	140	291
		07641 - INTERMEDIATE BENTS - 66880				

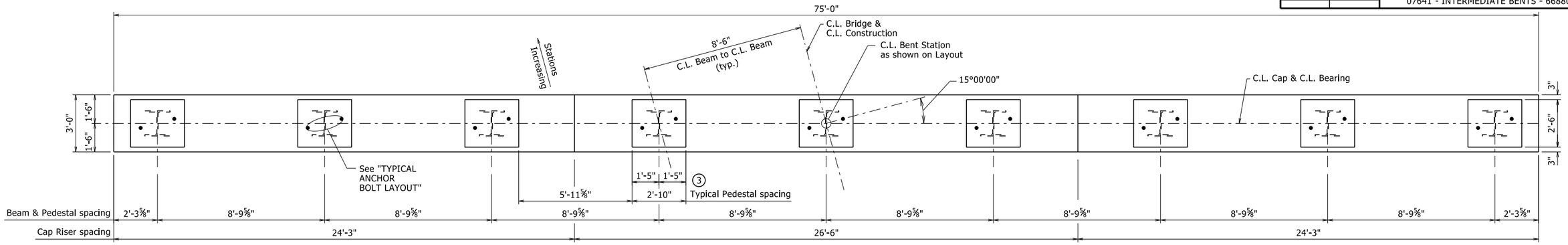

PLAN

⅜" = 1'-0"

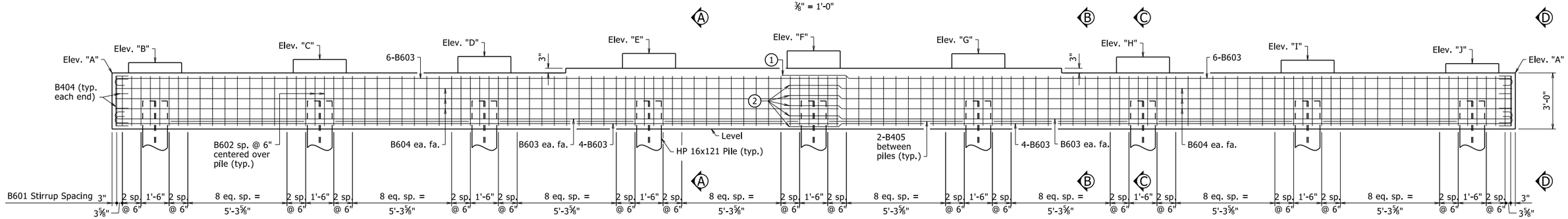

ELEVATION

LOOKING AHEAD

⅜" = 1'-0"

NOTES:

See Dwg. No. 66943 for "SECTION A-A", "SECTION B-B", "SECTION C-C", & "VIEW D-D".

① 3'-5" minimum lapped splice length

② 2'-8" minimum lapped splice length

③ Pedestals shall be cast level at the elevations shown in "ELEVATION". See Dwg. No. 66943 for "PEDESTAL PLAN" & "TYPICAL PEDESTAL DETAILS".

BAR LIST-PER BENT

MARK	NO. REQ'D	LENGTH	P.D.
B401	36	6'-6"	2"
B402	45	6'-2"	2"
B403	14	9'-8"	2"
B404	16	3'-10"	2"
B405	16	7'-2"	Str.
B601	112	11'-10"	4½"
B602	18	7'-8"	4½"
B603	24	39'-9"	4½"
B604	12	38'-8"	Str.

BENDING DIAGRAMS

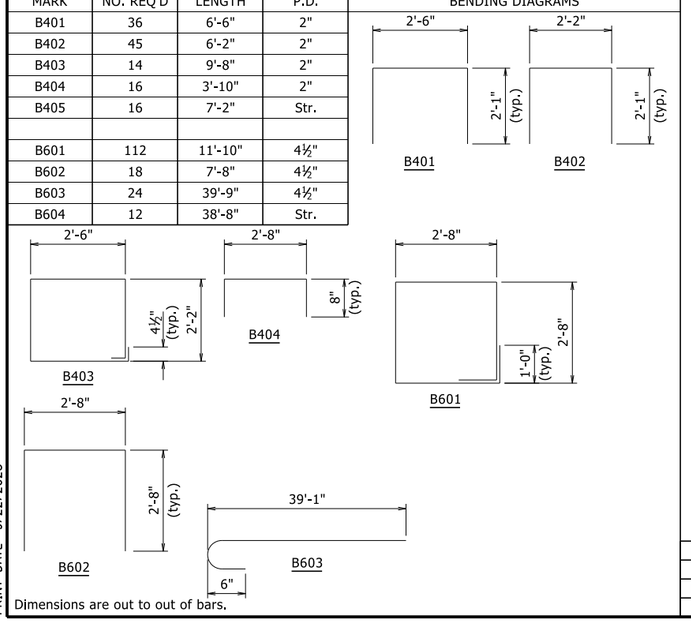

Dimensions are out to out of bars.

TABLE OF VARIABLES

	Elev. "A"	Elev. "B"	Elev. "C"	Elev. "D"	Elev. "E"	Elev. "F"	Elev. "G"	Elev. "H"	Elev. "I"	Elev. "J"
Bent 2	491.20	491.75	491.92	492.08	492.24	492.38	492.23	492.05	491.88	491.70
Bent 3	491.49	492.04	492.20	492.37	492.53	492.67	492.52	492.34	492.16	491.99
Bent 4	491.73	492.28	492.44	492.60	492.77	492.90	492.76	492.58	492.40	492.23
Bent 5	491.92	492.47	492.63	492.80	492.96	493.09	492.95	492.77	492.59	492.42

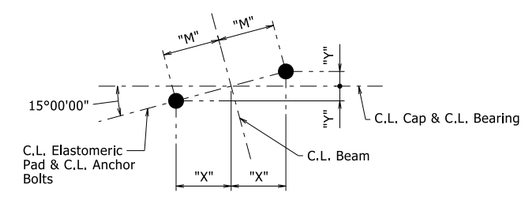

For Details of Elastomeric Bearings, see Dwg. Nos. 66945 & 66946.

TYPICAL ANCHOR BOLT LAYOUT

NO SCALE

	"M"	"X"	"Y"
Bent 2 & Bent 5	11"	10⅝"	2⅞"
Bent 3 & Bent 4	10¾"	10⅜"	2 13/16"

STATE OF ARKANSAS
LICENSED PROFESSIONAL ENGINEER
No. 9235
9/22/23
CHARLES R. ELLIS

BRIDGE ENGINEER

DETAILS OF INTERMEDIATE BENTS
HEARTSILL CREEK (SITE 1)

ROUTE SEC.

ARKANSAS STATE HIGHWAY COMMISSION

LITTLE ROCK, ARK.

DRAWN BY:	CGP	DATE:	07/31/2023	FILENAME:	b040861x1_b2.dgn
CHECKED BY:	WAC	DATE:	08/10/2023	SCALE:	AS NOTED
DESIGNED BY:	PGT	DATE:	07/2023		

BRIDGE NO. 07641 DRAWING NO. 66880

PRINT DATE: 9/22/2023

DATE REVISED	DATE REVISED	FED. RD. DIST. NO.	STATE	JOB NO.	SHEET NO.	TOTAL SHEETS
		6	ARK.	040861	141	291
		07641		- 391'-0" UNIT -	66881	

(1) Working Point to Gutterline.

(2) Tolerance: Minus = ¼";
Plus equal to the amount of slab thickening used to meet slab thickness tolerance. See "ADJUSTMENT FOR SLAB THICKNESS TOLERANCE" on Std. Dwg. No. 55007.

(3) See "ADJUSTMENT FOR SLAB THICKNESS TOLERANCE" on Std. Dwg. No. 55007.

(4) If permanent steel bridge deck forms are used, the Fabricator shall clip plates as necessary to accommodate the deck form supports.

(5) See "CURB DETAIL" on Dwg. No. 66947.

Bar positions or clearances from the forms shall be maintained by means of stays, ties, hangers, or other approved devices per Subsection 804.06. Placement of slab bolsters or high-chairs with full-length lower runners directly on removable deck forms will not be allowed.

Class 2 Protective Surface Treatment shall be applied to the Roadway and Sidewalk (including curbing) Surfaces and the Roadway Face and Top of Concrete Bridge Rail in accordance with Section 803.

Class 3 Textured Coating Finish shall be applied to all areas as specified in Special Provision "TEXTURED COATING FINISH" and in accordance with Subsection 802.19(b)(3).

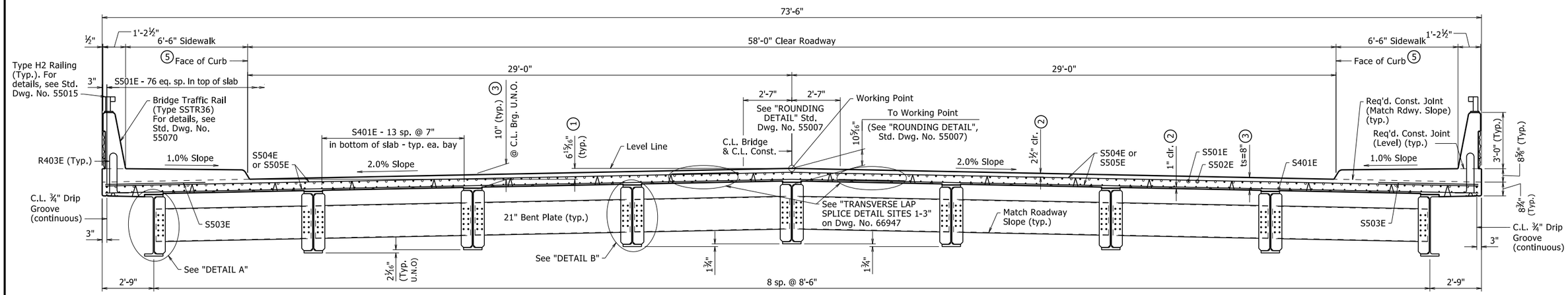

TYPICAL ROADWAY SECTION

Looking Ahead
⅜" = 1'-0"

Slab Reinforcing:
Longitudinal: S401E (Bottom) and S501E (Top) placed as shown
S502E placed as shown over intermediate supports, see "HALF-REINFORCING PLAN", Dwg. No. 66884.

Transverse: S504E & S505E @ 6" o.c. in top and bottom,
S503E @ 6" in top of overhang (bundled with #5 bars)

Sidewalk Reinforcing:
Longitudinal: K401E in top as shown

Transverse: K402E & K403E @ 12" o.c.

EXPANSION DEVICE:
Rdwy. Channel - C15x33.9
Conn. ∠8"x4"x½"
Detail Device ⅛" high & provide ¼" shims using 2 - 1/16" and 1 - ⅛" PLs.

For details of poured silicone joint, see Std. Dwg. No. 55008.

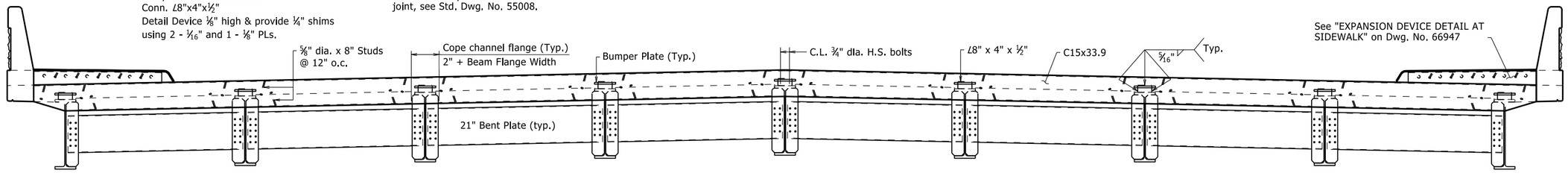

TYPICAL ROADWAY SECTION NEAR JOINT

Looking Ahead
Bent 1 Shown
⅜" = 1'-0"

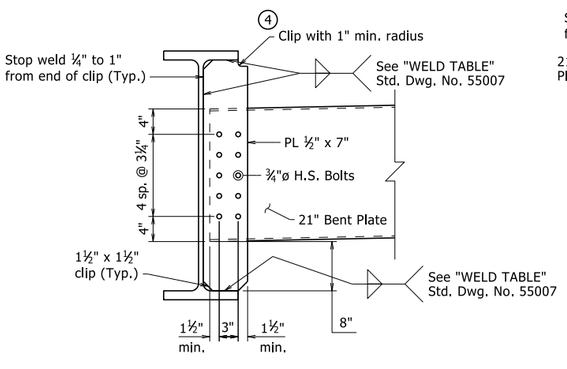

DETAIL A

1" = 1'-0"

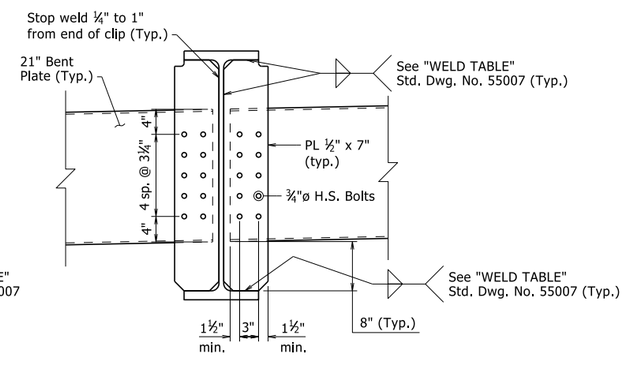

DETAIL B

1" = 1'-0"

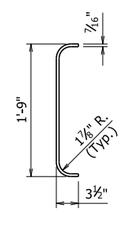

SECTION THRU DIAPHRAGM

1" = 1'-0"

Bolts in diaphragm connections shall be properly installed and tightened in accordance with Subsection 807.71.

STATE OF ARKANSAS
LICENSED PROFESSIONAL ENGINEER
No. 9235
9/22/23
CHARLES R. ELLIS
BRIDGE ENGINEER

SHEET 1 OF 4
DETAILS OF 391'-0"
CONTINUOUS W-BEAM UNIT
HEARTSILL CREEK (SITE 1)

ROUTE SEC.
ARKANSAS STATE HIGHWAY COMMISSION
LITTLE ROCK, ARK.

DRAWN BY: JCG DATE: 5/10/2023
CHECKED BY: YG DATE: 6/27/2023
DESIGNED BY: DKS DATE: 11/10/2022
FILENAME: b040861x1_s1.dgn
SCALE: As Noted

BRIDGE NO. 07641 DRAWING NO. 66881

PRINT DATE: 9/22/2023

DATE REVISED	DATE REVISED	FED. RD. DIST. NO.	STATE	JOB NO.	SHEET NO.	TOTAL SHEETS
		6	ARK.	040861	142	291
		07641		- 391'-0" UNIT -	66882	

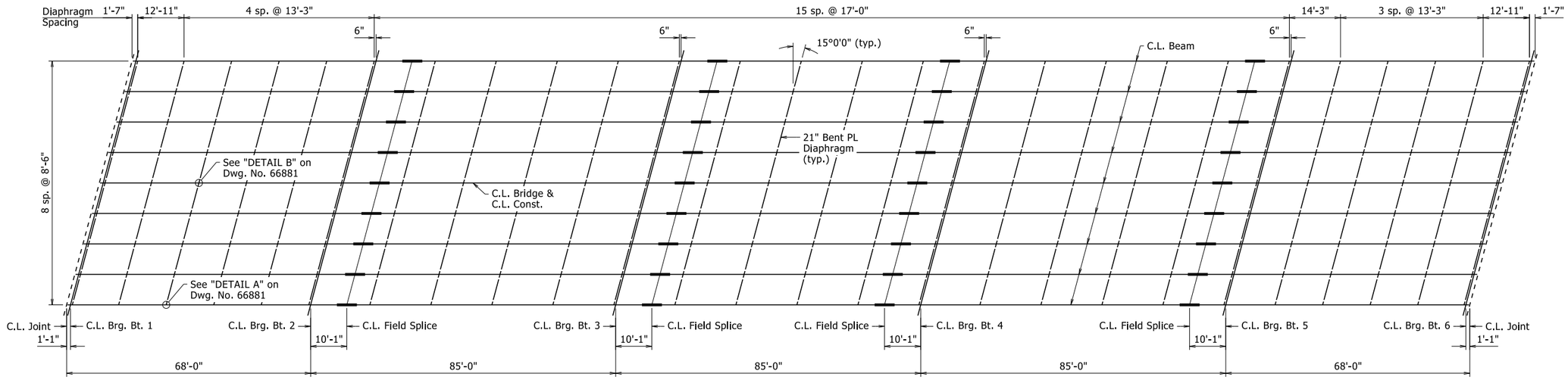

FRAMING PLAN

1/16" = 1'-0"

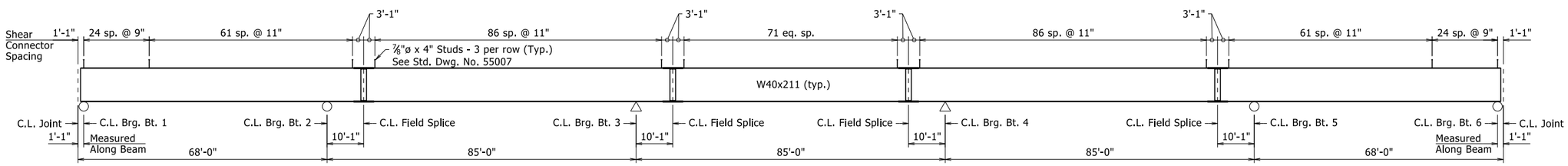

TYPICAL BEAM ELEVATION

No Scale

All structural steel shall be ASTM A709, Grade 50W unless otherwise noted and shall be paid for as "Structural Steel In Beam Spans (A709, Gr. 50W)". See Std. Dwg. Nos. 55006 and 55007 for additional notes and details.

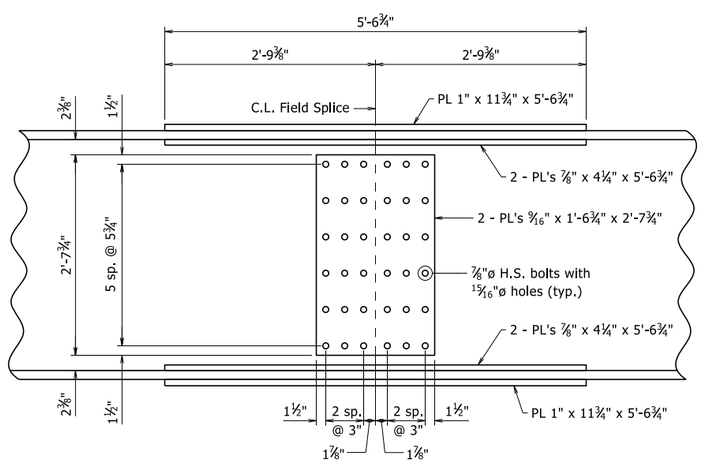

WEB SPLICE

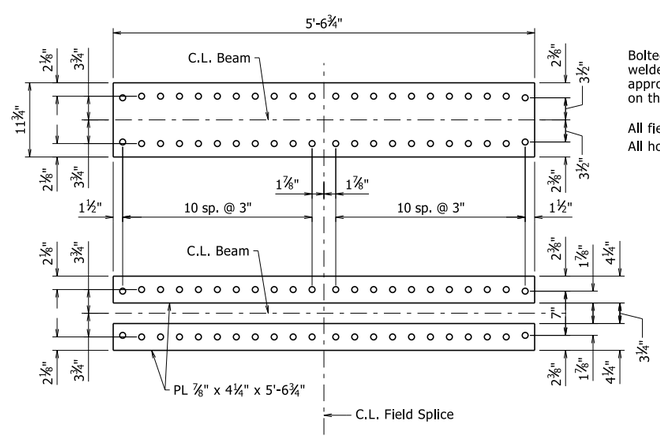

FLANGE SPLICE

FIELD SPLICE DETAIL

1" = 1'-0"

Bolted field splices may be eliminated or shop welded splices may be substituted with the approval of the Engineer. Payment will be made on the basis of plan quantities.

All field splice bolts shall be ⅞"ø H.S. bolts.
All holes for splice bolts shall be 15/16"ø.

STATE OF ARKANSAS
LICENSED PROFESSIONAL ENGINEER
No. 9235
9/22/23
CHARLES R. ELLIS
BRIDGE ENGINEER

SHEET 2 OF 4
DETAILS OF 391'-0"
CONTINUOUS W-BEAM UNIT
HEARTSILL CREEK (SITE 1)

ROUTE SEC.

ARKANSAS STATE HIGHWAY COMMISSION

LITTLE ROCK, ARK.

DRAWN BY: JCG DATE: 5/10/2023 FILENAME: b040861_s1.dgn
CHECKED BY: YG DATE: 6/27/2023 SCALE: As Noted
DESIGNED BY: DKS DATE: 11/10/2022

BRIDGE NO. 07641 DRAWING NO. 66882

PRINT DATE: 9/22/2023

DATE REVISED	DATE REVISED	FED. RD. DIST. NO.	STATE	JOB NO.	SHEET NO.	TOTAL SHEETS
		6	ARK.	040861	143	291
		07641		- 391'-0" UNIT -	66883	

TABLE OF DEAD LOAD DEFLECTIONS (INCHES)

Span	Point of Deflection	Exterior Beam: Structural Steel	Exterior Beam: Structural Steel + Slab	Exterior Beam: Structural Steel + Slab + Rail + Sidewalk	Interior Beam: Structural Steel	Interior Beam: Structural Steel + Slab	Interior Beam: Structural Steel + Slab + Rail + Sidewalk
Span 1	0	0	0	0	0	0	0
	0.1	0.034	0.150	0.169	0.035	0.184	0.202
	0.2	0.062	0.276	0.310	0.064	0.338	0.370
	0.3	0.081	0.360	0.405	0.084	0.442	0.484
	0.4	0.089	0.395	0.444	0.092	0.484	0.530
	0.5	0.085	0.378	0.425	0.088	0.463	0.507
	0.6	0.071	0.315	0.354	0.073	0.385	0.422
	0.7	0.050	0.220	0.247	0.051	0.269	0.295
	0.8	0.026	0.115	0.129	0.027	0.141	0.155
	0.9	0.007	0.030	0.034	0.007	0.036	0.039
Span 2	0	0	0	0	0	0	0
	0.1	0.018	0.081	0.091	0.019	0.100	0.110
	0.2	0.053	0.236	0.265	0.055	0.290	0.318
	0.3	0.089	0.396	0.445	0.092	0.485	0.532
	0.4	0.115	0.510	0.573	0.119	0.626	0.686
	0.5	0.124	0.550	0.618	0.128	0.674	0.739
	0.6	0.114	0.505	0.568	0.118	0.619	0.678
	0.7	0.087	0.387	0.435	0.090	0.474	0.519
	0.8	0.051	0.226	0.254	0.053	0.278	0.305
	0.9	0.017	0.074	0.083	0.017	0.090	0.099
½ Span 3	0	0	0	0	0	0	0
	0.1	0.014	0.063	0.071	0.015	0.077	0.084
	0.2	0.046	0.205	0.231	0.048	0.252	0.276
	0.3	0.081	0.358	0.402	0.083	0.438	0.480
	0.4	0.106	0.469	0.527	0.109	0.574	0.629
	0.5	0.115	0.509	0.572	0.119	0.624	0.684

Symmetrical about this point

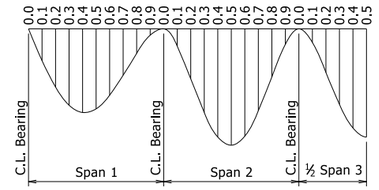

DEAD LOAD DEFLECTION DIAGRAM

No Scale

Camber for Dead Load Deflection ± ¼" tolerance. Deflections shown are along C.L. Beam from a chord from C.L. Bearing to C.L. Bearing. Negative sign (-) indicates point above chord.

BAR LIST

MARK	NO. REQ'D.	LENGTH	P.D.
S401E	1200	41'-3"	Str.
S501E	539	58'-11"	Str.
S502E	304	40'-0"	Str.
S503E	1556	5'-4"	Str.
S504E	1498	34'-2"	Str.
S505E	1498	42'-8"	Str.
S506E	8	39'-9"	3¾"
S507E	16	4'-0"	3¾"
S508E-S537E	4 ea.	5'-8"-59'-9"	Str.
S538E-S540E	2 ea.	22'-8"-30'-2"	Str.
S541E-S543E	2 ea.	33'-1"-40'-6"	Str.
S544E-S546E	2 ea.	31'-2"-38'-8"	Str.
S547E-S549E	2 ea.	24'-7"-32'-0"	Str.
K401E	160	41'-3"	Str.
K402E	784	5'-6"	3"
K403E	784	7'-2"	Str.
K404E	10	7'-5"	3"
(1) R401E	1564	6'-4"	2½", 3"
(1) R402E	180	5'-6"	Str.
(1) R403E	1564	5'-0"	3", 3¾"
(1) R404E	368	16'-8"	Str.

BENDING DIAGRAMS

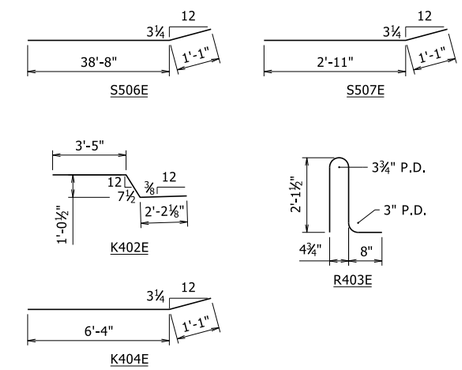

(1) See Std. Dwg. No. 55070 for additional details.

All bars designated with an "E" suffix are to be epoxy coated. Dimensions are out to out of bars.

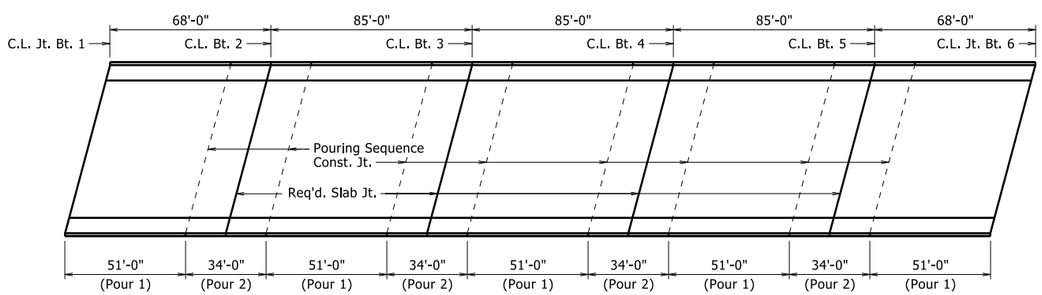

SLAB POURING SEQUENCE

1/32" = 1'-0"

Slab Pouring Sequence Notes:
Pours with the same number may be placed simultaneously or separately. All Pours (1) must be placed before Pours (2). 48 hours shall elapse between the end of a pour and the start of the next pour. 72 hours shall elapse between adjacent pours.

Concrete in bridge superstructure shall be placed, consolidated and screeded off for the entire pour before any concrete has taken its initial set. This may require the use of a retarding agent.

A minimum of 72 hours shall elapse between completion of the slab and the pouring of the sidewalk. A minimum of 72 hours shall elapse between the completion of the sidewalk and pouring of the bridge rail. Any railing or sidewalk pours made before the entire slab unit has been placed must be approved by the Engineer. The Contractor must obtain approval from the Engineer for any deviations from the pouring sequence(s) shown.

Required slab joints and pouring sequence construction joints shall align with bridge traffic rail joints at the face of the rail.

STATE OF ARKANSAS
LICENSED PROFESSIONAL ENGINEER
No. 9235
9/22/23
CHARLES R. ELLIS

Charles R. Ellis
9/22/2023 9:41 AM

BRIDGE ENGINEER

SHEET 3 OF 4
DETAILS OF 391'-0"
CONTINUOUS W-BEAM UNIT
HEARTSILL CREEK (SITE 1)

ROUTE SEC.

ARKANSAS STATE HIGHWAY COMMISSION

LITTLE ROCK, ARK.

DRAWN BY: JCG DATE: 5/10/2023 FILENAME: b040861_s1.dgn
CHECKED BY: YG DATE: 6/27/2023 SCALE: As Noted
DESIGNED BY: DKS DATE: 11/10/2022

BRIDGE NO. 07641 DRAWING NO. 66883

PRINT DATE: 9/22/2023

DATE REVISED	DATE REVISED	FED. RD. DIST. NO.	STATE	JOB NO.	SHEET NO.	TOTAL SHEETS
		6	ARK.	040861	144	291
		07641		- 391'-0" UNIT -		66884

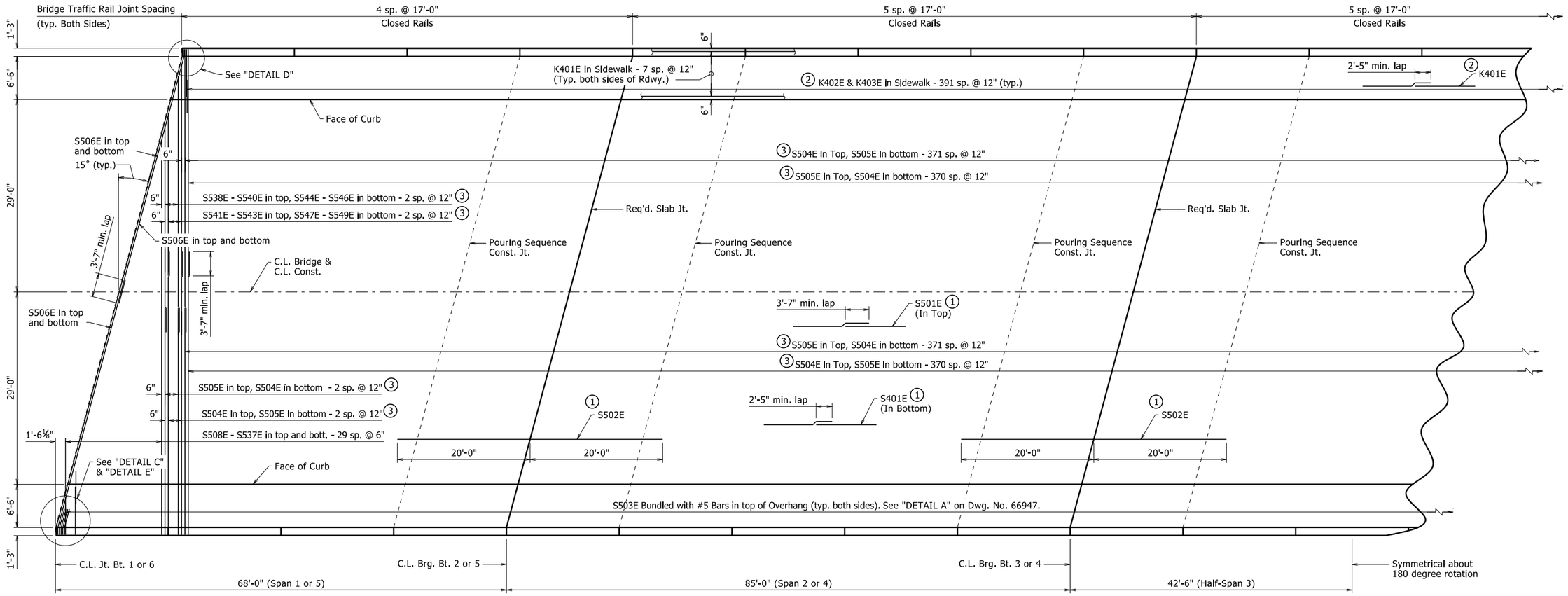

HALF-REINFORCING PLAN

⅛" = 1'-0"

① Placed as shown in "TYPICAL ROADWAY SECTION", Dwg. No. 66881

② Placed as shown in "SIDEWALK DETAIL", Dwg. No. 66947

③ Placed as shown in "TRANSVERSE LAP SPLICE DETAIL SITES 1-3", Dwg. No. 66947

Bridge traffic rail joint spacing and depth shown is typical for both sides of roadway.
For additional details, see Std. Dwg. No. 55070.

For Bar List, see Dwg. No. 66883.

TABLE OF VARIABLES
BRIDGE TRAFFIC RAILING (TYPE SSTR36)

Closed Rail Panels		
Panel Length	"A"	R4XXE Bar
17'-0"	33	R404E

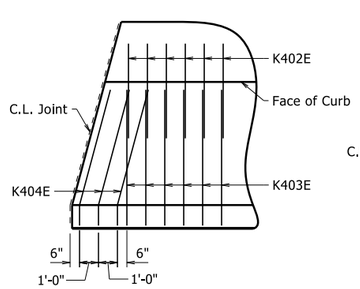

DETAIL C
(SIDEWALK)

¼" = 1'-0"

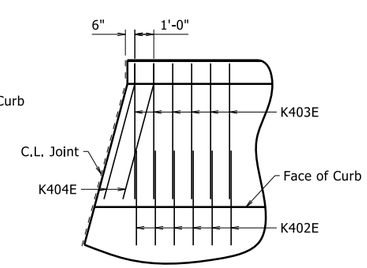

DETAIL D
(SIDEWALK)

¼" = 1'-0"

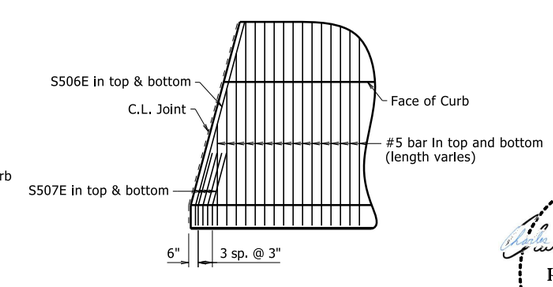

DETAIL E
(SLAB)

¼" = 1'-0"

STATE OF ARKANSAS
9/22/2023 9:46 AM
LICENSED PROFESSIONAL ENGINEER
No. 9235
9/22/23
CHARLES R. ELLIS

BRIDGE ENGINEER

SHEET 4 OF 4
DETAILS OF 391'-0"
CONTINUOUS W-BEAM UNIT
HEARTSILL CREEK (SITE 1)

ROUTE SEC.

ARKANSAS STATE HIGHWAY COMMISSION

LITTLE ROCK, ARK.

DRAWN BY: JCG DATE: 5/10/2023 FILENAME: b040861_s1.dgn
CHECKED BY: YG DATE: 6/27/2023 SCALE: As Noted
DESIGNED BY: DKS DATE: 11/10/2022

BRIDGE NO. 07641 DRAWING NO. 66884

PRINT DATE: 9/22/2023

DATE REVISED	DATE REVISED	FED. RD. DIST. NO.	STATE	JOB NO.	SHEET NO.	TOTAL SHEETS
		6	ARK.	040861	145	291
		07642		- LAYOUT -	66885	

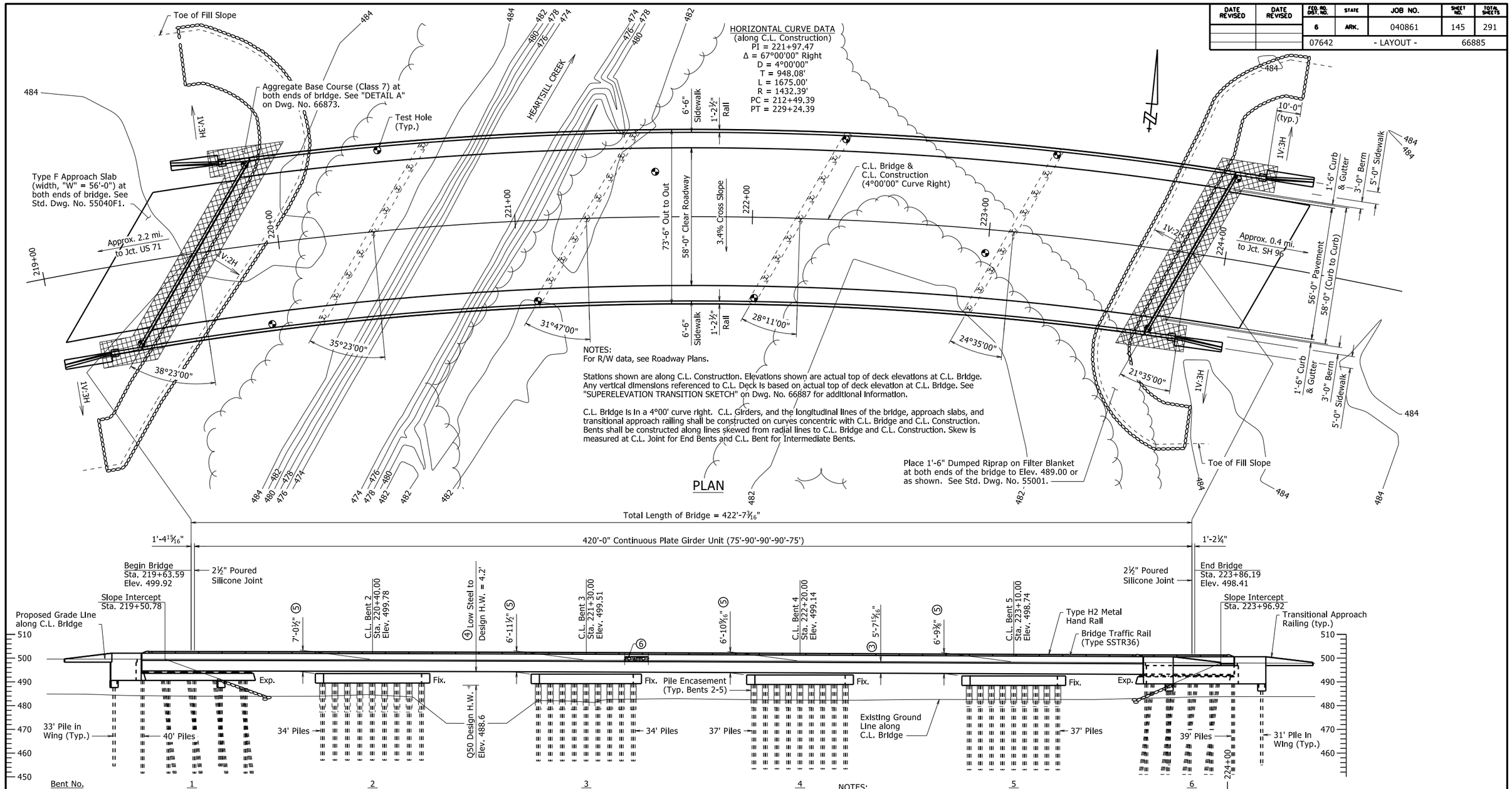

PLAN

NOTES:
For R/W data, see Roadway Plans.

Stations shown are along C.L. Construction. Elevations shown are actual top of deck elevations at C.L. Bridge. Any vertical dimensions referenced to C.L. Deck is based on actual top of deck elevation at C.L. Bridge. See "SUPERELEVATION TRANSITION SKETCH" on Dwg. No. 66887 for additional information.

C.L. Bridge is in a 4°00' curve right. C.L. Girders, and the longitudinal lines of the bridge, approach slabs, and transitional approach railing shall be constructed on curves concentric with C.L. Bridge and C.L. Construction. Bents shall be constructed along lines skewed from radial lines to C.L. Bridge and C.L. Construction. Skew is measured at C.L. Joint for End Bents and C.L. Bent for Intermediate Bents.

ELEVATION

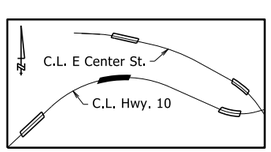

LOCATION SKETCH
No Scale

DETAIL DRAWINGS:	DRAWING NO(S).
End Bents	66888-66890 & 66939-66942
Intermediate Bents	66891 & 66943
Steel H-Piling	66944
Elastomeric Bearings	66945-66946
420'-0" Continuous Plate Girder Unit	66892-66897 & 66947-66948
General Notes For Steel Bridge Structures	55006
Details For Steel Bridge Structures	55007
Poured Silicone Joints	55008
Transitional Approach Railing	55013A
Type H2 Railing	55015
Bridge Traffic Rail	55070

NOTES:

For General Notes, see Dwg. No. 66873.

For Soil Borings, see Dwg. No. 66886 & 66887.

For Hydraulic Data, see Dwg. No. 66887.

③ Measured from top of deck at C.L. Bridge to low steel.

④ Low Steel Elev. 492.82 occurs at Sta. 223+70.97, 34' Right.

⑤ Top of Deck at C.L. Bridge and C.L. Bent to low side top of cap.

⑥ Ashlar Stone Pattern, see Special Provision "Architectural Finish" and Dwg. Nos. 66940 & 66947.

STATE OF ARKANSAS
LICENSED PROFESSIONAL ENGINEER
No. 9235
9/22/23
CHARLES R. ELLIS
BRIDGE ENGINEER

SHEET 1 OF 3
LAYOUT OF BRIDGE
HIGHWAY 10 OVER HEARTSILL CREEK (SITE 2)
HWY. 10 - HWY. 96 (GREENWOOD BYPASS) (S)
SEBASTIAN COUNTY

ROUTE 10 SEC. 0

ARKANSAS STATE HIGHWAY COMMISSION
LITTLE ROCK, ARK.

DRAWN BY: CGP DATE: 9/6/2022
CHECKED BY: JYP DATE: 11/08/2022
DESIGNED BY: CNL DATE: 7/1/2022
FILENAME: b040861x2_l1.dgn
SCALE: 1" = 20' or As Noted

BRIDGE NO. 07642 DRAWING NO. 66885

PRINT DATE: 9/22/2023

DATE REVISED	DATE REVISED	FED. RD. DIST. NO.	STATE	JOB NO.	SHEET NO.	TOTAL SHEETS
		6	ARK.	040861	146	291
		07642		- LAYOUT -		66886

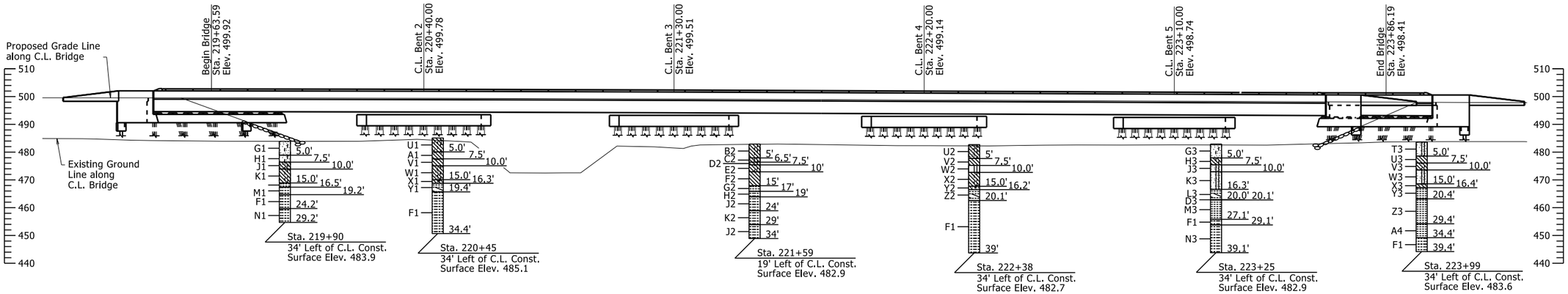

ELEVATION OF SOIL BORINGS - LEFT OF C.L. CONST.

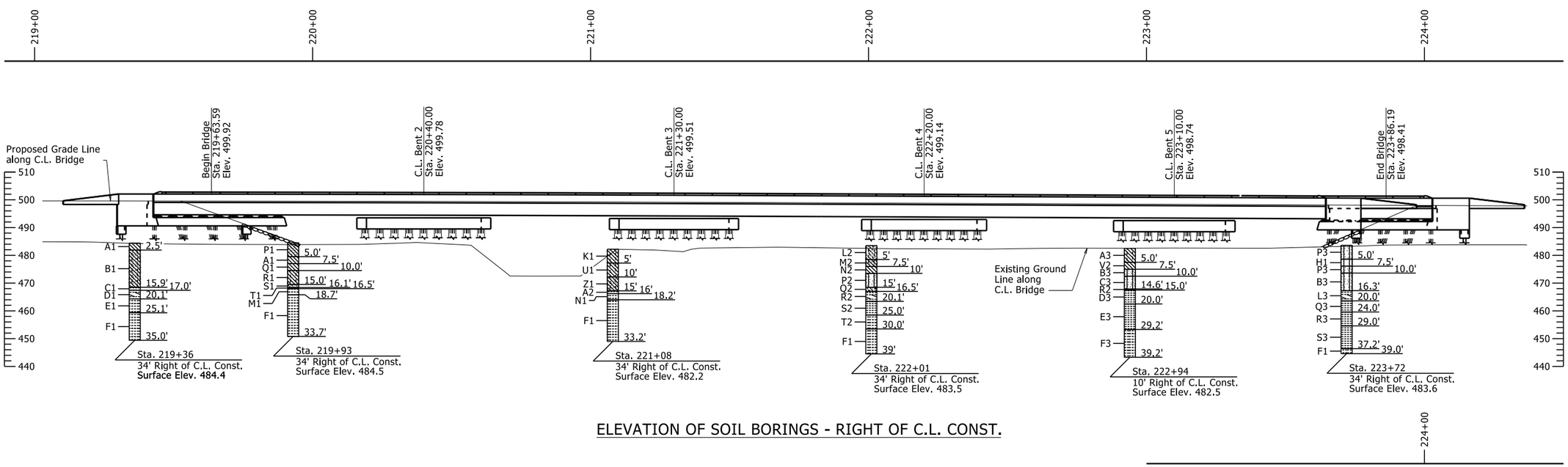

ELEVATION OF SOIL BORINGS - RIGHT OF C.L. CONST.

For Boring Legend and "N" Values, see Dwg. No. 66887.

STATE OF ARKANSAS
LICENSED PROFESSIONAL ENGINEER
No. 9235
9/22/23
CHARLES R. ELLIS
BRIDGE ENGINEER

SHEET 2 OF 3
LAYOUT OF BRIDGE
HIGHWAY 10 OVER HEARTSILL CREEK (SITE 2)
HWY. 10 - HWY. 96 (GREENWOOD BYPASS) (S)
SEBASTIAN COUNTY

ROUTE 10 SEC. 0

ARKANSAS STATE HIGHWAY COMMISSION

LITTLE ROCK, ARK.

DRAWN BY:	CGP	DATE: 9/6/2022	FILENAME:	b040861x2_l1.dgn	
CHECKED BY:	JYP	DATE: 11/08/2022	SCALE:	1" = 20'	
DESIGNED BY:	CNL	DATE: 7/1/2022			

BRIDGE NO. 07642 DRAWING NO. 66886

PRINT DATE: 9/22/2023

DATE REVISED	DATE REVISED	FED. RD. DIST. NO.	STATE	JOB NO.	SHEET NO.	TOTAL SHEETS
		6	ARK.	040861	147	291
		07642		- LAYOUT -	66887	

BORING LEGEND

A1-Moist, Stiff, Brown Lean Clay
B1-Wet, Stiff, Brown Sandy Silty Clay
C1-SHALE - Highly Weathered, Medium Hard with Soft Layers, Brown
D1-SHALE WITH FREQUENT SANDSTONE PARTINGS AND SEAMS - Highly Weathered, Medium Hard with Soft Layers, Frequent Fractures, Gray
E1-SHALE WITH FREQUENT SANDSTONE PARTINGS AND SEAMS - Weathered, Medium Hard with Hard Layers, Frequent Fractures, Gray
F1-SHALE WITH FREQUENT SANDSTONE PARTINGS AND SEAMS - Unweathered, Medium Hard with Hard Layers, Gray
G1-Moist, Loose, Brown Silt
H1-Moist, Medium Dense, Brown Silt
J1-Wet, Medium Stiff, Brown Sandy Silty Clay
K1-Moist, Medium Stiff, Brown Silty Clay
L1-SHALE - Highly Weathered, Medium Hard, Gray
M1-SHALE WITH FREQUENT SANDSTONE PARTINGS AND SEAMS - Slightly Weathered, Medium Hard with Hard Layers, Gray
N1-SHALE WITH FREQUENT SANDSTONE PARTINGS AND SEAMS - Unweathered, Medium Hard with Hard Layers, Occasional Fractures, Gray
P1-Moist, Stiff, Brown Lean Clay with Sand
Q1-Moist, Medium Stiff, Brown Lean Clay
R1-Moist, Stiff, Brown Silty Clay*
S1-Moist, Medium Dense, Brown Clayey Sand
T1-SHALE - Highly Weathered, Very Soft, Brown
U1-Moist, Stiff, Brown Silty Clay
V1-Moist, Stiff, Brown Lean Clay with Some Sand
W1-Moist, Stiff, Brown Sandy Silty Clay
X1-Moist, Stiff, Brown Sandy Silty Clay with Gravel (Shale Fragments)
Y1-SHALE - Highly Weathered, Very Soft, Brown and Gray
Z1-Wet, Medium Stiff, Brown Silty Clay with Sand
A2-SHALE - Weathered, Medium Hard, Dark Gray
B2-Moist, Stiff, Brown and Gray Silty Clay
C2-Moist, Stiff, Light Brown Silty Clay
D2-Wet, Stiff, Light Brown Silty Clay
E2-Wet, Medium Stiff, Light Brown Silty Clay
F2-Wet, Very Soft, Light Brown Lean Clay
G2-SHALE - Highly Weathered, Medium Hard, Dark Gray
H2-SHALE WITH FREQUENT SANDSTONE PARTINGS AND SEAMS - Unweathered, Medium Hard, Frequent Fractures, Gray
J2-SHALE WITH FREQUENT SANDSTONE PARTINGS AND SEAMS - Unweathered, Medium Hard, Gray
K2-SHALE WITH FREQUENT SANDSTONE PARTINGS AND SEAMS - Unweathered, Medium Hard, Occasional Fractures, Gray
L2-Wet, Very Loose, Light Brown Silty, Clayey Sand
M2-Wet, Very Soft, Light Brown Silty Clay with Sand and Some Organic Matter (Wood)
N2-Wet, Very Soft, Light Brown Lean Clay with Some Organic Matter (Wood)
P2-Wet, Loose, Light Brown Silt with Sand
Q2-Wet, Medium Dense, Light Brown and Gray Clayey Sand with Rock Fragments
R2-SHALE - Highly Weathered, Soft, Gray
S2-SHALE - Unweathered, Medium Hard with Hard Layers, Gray
T2-SHALE WITH FREQUENT SANDSTONE PARTINGS AND SEAMS - Unweathered, Medium Hard with Hard Layers, Frequent Fractures, Trace Slickensides,
U2-Wet, Very Soft, Brown Silty Clay with Some Manganese Nodules
V2-Wet, Very Soft, Brown Lean Clay
W2-Wet, Very Loose, Light Brown and Gray Silt with Manganese Nodules
X2-Wet, Very Soft, Light Brown and Gray Silty Clay
Y2-Wet, Very Stiff, Brown Silty Clay with Rock Fragments
Z2-SHALE - Highly Weathered, Soft, Dark Gray
A3-Wet, Very Soft, Brown Silty Clay
B3-Wet, Medium Dense, Brown Silt with Sand
C3-Wet, Loose, Brown Silt with Sand
D3-SHALE - Weathered, Medium Hard, Gray
E3-SHALE - Slightly Weathered, Medium Hard, Slickensided, Gray
F3-SHALE WITH FREQUENT SANDSTONE PARTINGS AND SEAMS - Slightly Weathered, Medium Hard with Hard Layers, Slickensided, Gray
G3-Moist, Very Loose, Light Brown Silt with Sand
H3-Moist, Very Soft, Light Brown Silty Clay
J3-Wet, Very Loose, Brown Silt with Sand
K3-Wet, Medium Dense, Brown Silt with Sand
L3-SHALE - Highly Weathered, Very Soft, Gray
M3-SHALE - Unweathered, Medium Hard, Gray
N3-SHALE WITH FREQUENT SANDSTONE PARTINGS AND SEAMS - Unweathered, Medium Hard with Hard Layers, Occasional Slickensides, Gray
P3-Moist, Loose, Brown Silt with Sand
Q3-SHALE - Weathered, Medium Hard with Soft Layers, Slickensided, Gray
R3-SHALE - Slightly Weathered, Medium Hard with Soft Layers, Slickensided, Gray
S3-SHALE - Unweathered, Medium Hard, Slickensided, Gray
T3-Moist, Very Loose, Brown Silt with Sand
U3-Moist, Very Soft, Brown Lean Clay
V3-Moist, Very Soft, Brown Silty Clay
W3-Moist, Loose, Brown Sandy Silt
X3-Wet, Medium Stiff, Brown Sandy Lean Clay
Y3-SHALE - Weathered with Highly Weathered Layers, Medium Hard with Soft Layers, Gray
Z3-SHALE - Unweathered, Medium Hard with Soft Layers, Occasional Fractures, Slickensided, Gray
A4-SHALE - Unweathered, Medium Hard, Occasional Fractures, Gray

"N" VALUES

Sta. 219+90 - 34' Left of C.L. Const.

3.0- 4.0,N=9
5.5- 6.5,N=11
8.0- 9.0,N=7
10.5- 11.5,N=8
15.5- 16.0,N=60(6")

Sta. 220+45 - 34' Left of C.L. Const.

3.0- 4.0,N=13
5.5- 6.5,N=14
8.0- 9.0,N=11
10.5- 11.5,N=9
15.5- 16.5,N=15

Sta. 221+59 - 19' Left of C.L. Const.

3.0- 4.0,N=15
5.5- 6.5,N=12
8.0- 9.0,N=5
10.5- 11.5,N=0
15.5- 15.6,N=38(1")

Sta. 222+38 - 34' Left of C.L. Const.

3.0- 4.0,N=0
5.5- 6.5,N=0
8.0- 9.0,N=0
10.5- 11.5,N=1
15.5- 16.5,N=19
20- 20.1,N=30(1")

Sta. 223+25 - 34' Left of C.L. Const.

3.0- 4.0,N=0
5.5- 6.5,N=0
8.0- 9.0,N=4
10.5- 11.5,N=13
15.5- 16.5,N=26
20.0- 20.1,N=30(1")

Sta. 223+99 - 34' Left of C.L. Const.

3.0- 4.0,N=0
5.5- 6.5,N=0
8.0- 9.0,N=1
10.5- 11.5,N=6
15.5- 16.5,N=8
20.0- 20.4,N=48(5")

Sta. 219+36 - 34' Right of C.L. Const.

3.0- 4.0,N=12
5.5- 6.5,N=14
8.0- 9.0,N=6
10.5- 11.5,N=9
15.5- 16.3,N=48(10")

Sta. 219+93 - 34' Right of C.L. Const.

3.0- 4.0,N=14
5.5- 6.5,N=15
8.0- 9.0,N=7
10.5- 11.5,N=13
15.5- 16.5,N=25

Sta. 221+08 - 34' Right of C.L. Const.

3.0- 4.0,N=8
5.5- 6.5,N=9
8.0- 9.0,N=13
10.5- 11.5,N=7
15.5- 15.7,N=48(2")

Sta. 222+01 - 34' Right of C.L. Const.

3.0- 4.0,N=0
5.5- 6.5,N=0
8.0- 9.0,N=1
10.5- 11.5,N=10
15.5- 16.5,N=26
20- 20.1,N=30(1")

Sta. 222+94 - 10' Right of C.L. Const.

3.0- 4.0,N=0
5.5- 6.5,N=0
8.0- 9.0,N=11
10.5- 11.5,N=10
15.5- 16.4,N=76(11")
20.0- 20.2,N=60(2")

Sta. 223+72 - 34' Right of C.L. Const.

3.0- 4.0,N=5
5.5- 6.5,N=15
8.0- 9.0,N=9
10.5- 11.5,N=15
15.5- 16.5,N=26
20.5- 20.6,N=40(1")

HYDRAULIC DATA

FLOOD DESCRIPTION	FREQUENCY	TOTAL ② DISCHARGE	DISCHARGE THIS SITE	① NATURAL WATER SURFACE ELEVATION	WATER SURFACE ELEV. WITH BACKWATER
	YEARS	CFS	CFS	FEET	FEET
Design	50	16,934	9,640	486.8	488.6
Base	100	20,893	12,064	487.5	489.5
Extreme	500	33,875	20,391	489.3	491.9
Overtopping	>500	-	-	-	-

① Unconstricted water surface elevation without structure or roadway approaches.

② The total discharge includes flow at this Site and Site 3.

Q100 backwater elevation for existing structure = N/A
Proposed Low Bridge Chord elevation = 492.82 ft.

Drainage Area = 42.2 square miles
Historical H.W. Elev. = N/A

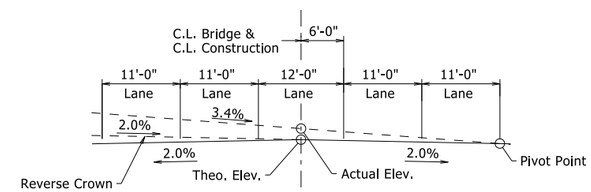

Begin Superelevation Transition	Sta. 211+95.00
Reverse Crown	Sta. 213+53.82
Max. Superelevation	Sta. 214+65.00
Max. Superelevation	Sta. 228+56.89
Reverse Crown	Sta. 229+68.07
End Superelevation Transition	Sta. 231+26.89

SUPERELEVATION TRANSITION SKETCH

Looking Ahead

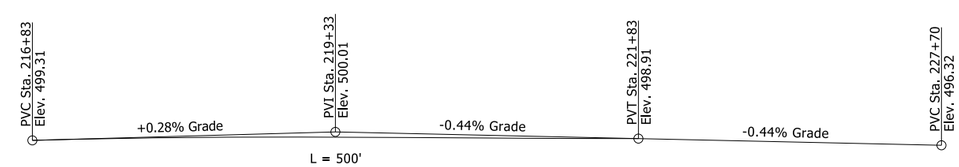

VERTICAL ALIGNMENT DATA

Along Profile Grade Line

STATE OF ARKANSAS
LICENSED PROFESSIONAL ENGINEER
No. 9235
9/22/23
CHARLES R. ELLIS

Charles R. Ellis
9-22-11 2023 9:16 AM

BRIDGE ENGINEER

SHEET 3 OF 3
LAYOUT OF BRIDGE
HIGHWAY 10 OVER HEARTSILL CREEK (SITE 2)
HWY. 10 - HWY. 96 (GREENWOOD BYPASS) (S)
SEBASTIAN COUNTY

ROUTE 10 SEC. 0

ARKANSAS STATE HIGHWAY COMMISSION

LITTLE ROCK, ARK.

DRAWN BY:	CGP	DATE: 9/6/2022	FILENAME:	b040861x2_l1.dgn	
CHECKED BY:	JYP	DATE: 11/08/2022	SCALE:	No Scale	
DESIGNED BY:	CNL	DATE: 7/1/2022			

BRIDGE NO. 07642 DRAWING NO. 66887

PRINT DATE: 9/22/2023

DATE REVISED	DATE REVISED	FED. RD. DIST. NO.	STATE	JOB NO.	SHEET NO.	TOTAL SHEETS
		6	ARK.	040861	148	291
		07642 - END BENTS - 66888				

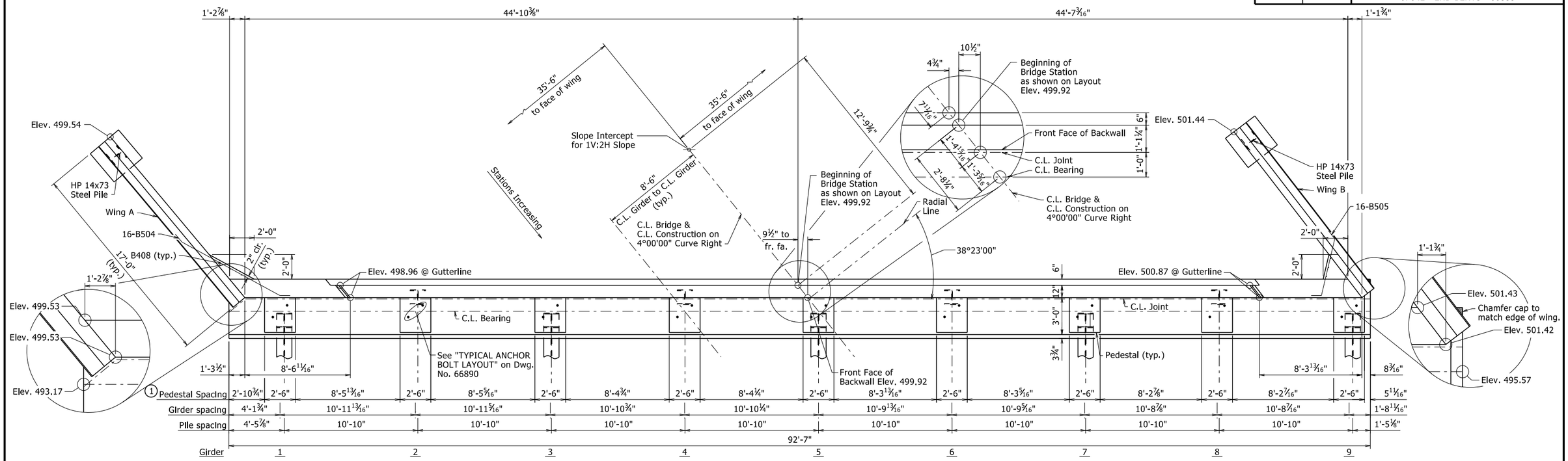

PLAN - BENT 1

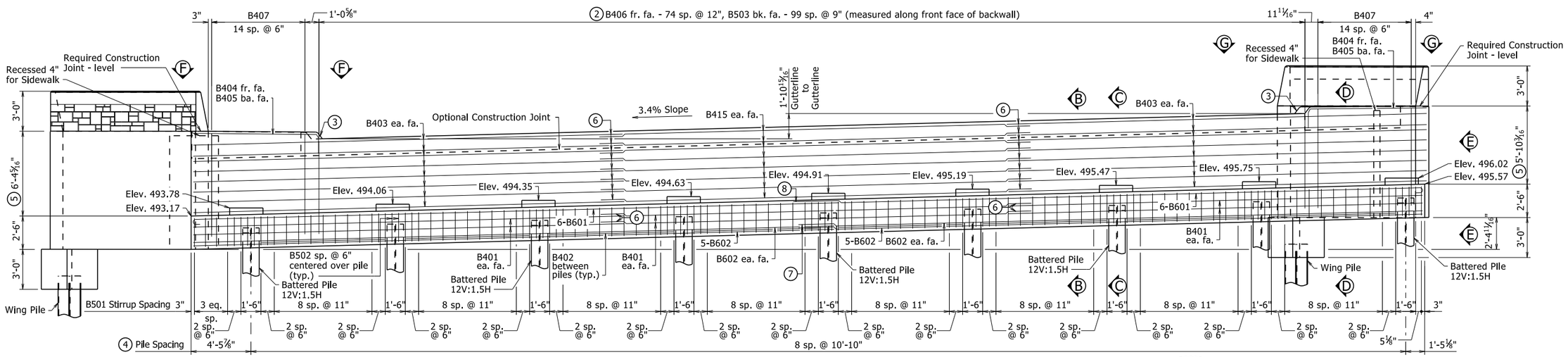

ELEVATION - BENT 1

LOOKING BACK

NOTES:

① Pedestals shall be cast level at the elevations shown in "ELEVATION - BENT 1". See Dwg. No. 66939 for "PEDESTAL PLAN" & "TYPICAL PEDESTAL DETAILS".

② See Dwg. No. 66939 for "SECTION B-B", "SECTION C-C", "SECTION D-D", "VIEW E-E", and Dwg. No. 66890 for "VIEW F-F" & "VIEW G-G" for placement of reinforcing.

③ See Dwg. No. 66939 for "SIDEWALK & CURB DETAIL".

④ See Dwg. No. 66890 for "LAYOUT OF PILES".

⑤ Measured at beginning of wing.

⑥ 1'-9" minimum lapped splice length

⑦ 2'-8" minimum lapped splice length

⑧ 3'-5" minimum lapped splice length

NOTES:

See Dwg. No. 66940 for Wing Views and Sections.

See Dwg. No. 66942 for Three Dimensional View of Wing.

STATE OF ARKANSAS
LICENSED PROFESSIONAL ENGINEER
No. 9235
9/22/23
CHARLES R. ELLIS

BRIDGE ENGINEER

SHEET 1 OF 3
DETAILS OF END BENTS
HEARTSILL CREEK (SITE 2)

ROUTE SEC.

ARKANSAS STATE HIGHWAY COMMISSION

LITTLE ROCK, ARK.

DRAWN BY:	CGP	DATE:	08/07/2023	FILENAME:	b040861x2_b1.dgn
CHECKED BY:	WAC	DATE:	08/31/2023	SCALE:	1/4" = 1'-0"
DESIGNED BY:	PGT	DATE:	08/2023		

BRIDGE NO. 07642 DRAWING NO. 66888

PRINT DATE: 9/22/2023

DATE REVISED	DATE REVISED	FED. RD. DIST. NO.	STATE	JOB NO.	SHEET NO.	TOTAL SHEETS
		6	ARK.	040861	149	291
		07642 - END BENTS - 66889				

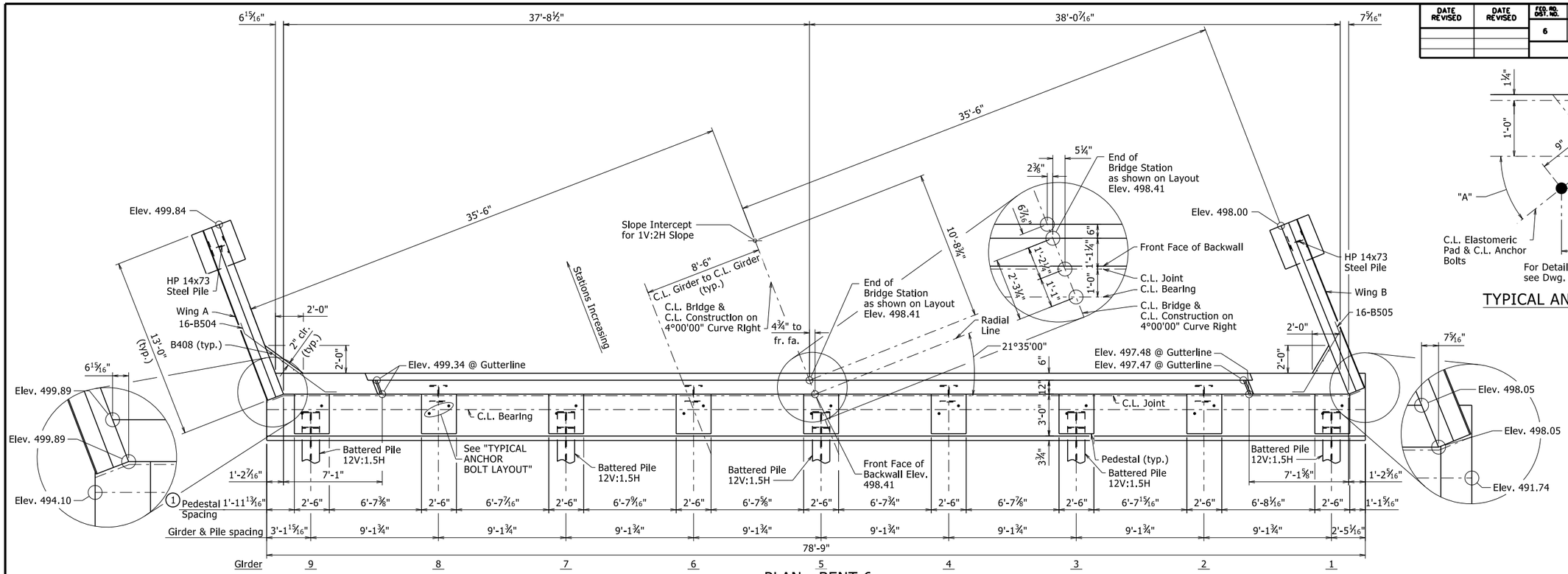

PLAN - BENT 6

¼" = 1'-0"

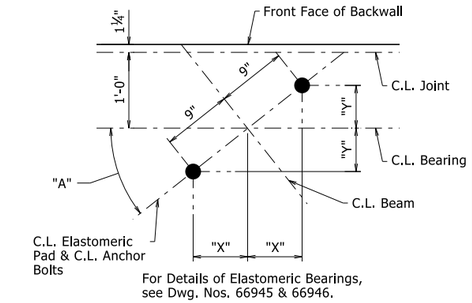

TYPICAL ANCHOR BOLT LAYOUT

NO SCALE

	"A"	"X"	"Y"
Girder 1	22°10'47"	8 3/8"	3 3/8"
Girder 2	22°02'19"	8 3/8"	3 3/8"
Girder 3	21°53'58"	8 3/8"	3 3/8"
Girder 4	21°45'44"	8 3/8"	3 3/8"
Girder 5	21°37'36"	8 3/8"	3 3/8"
Girder 6	21°29'34"	8 3/8"	3 3/8"
Girder 7	21°21'37"	8 3/8"	3 1/4"
Girder 8	21°13'47"	8 3/8"	3 1/4"
Girder 9	21°06'02"	8 3/8"	3 1/4"

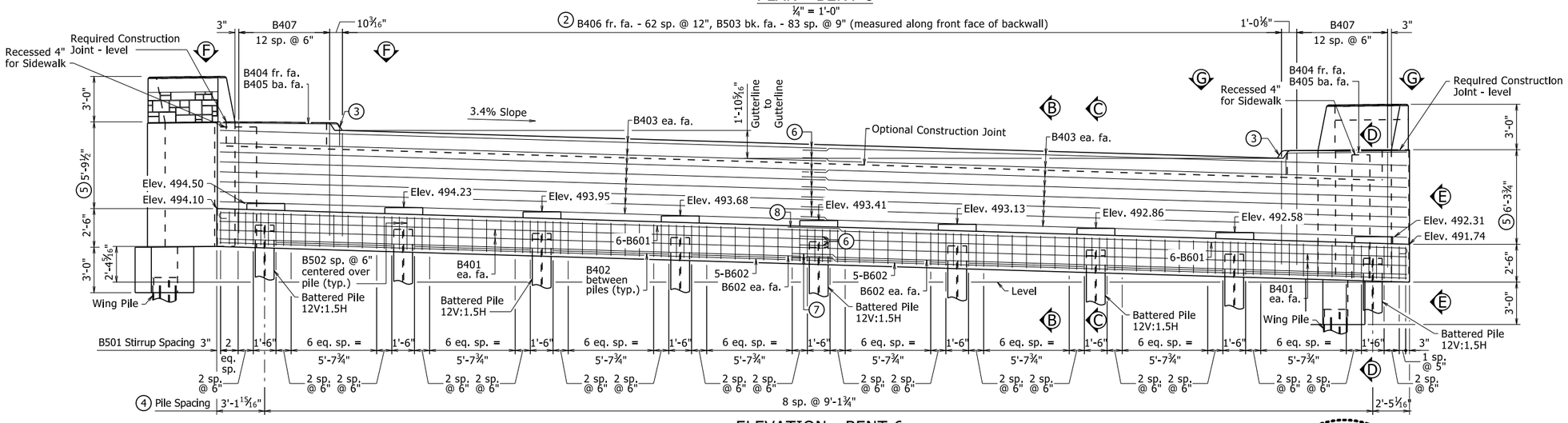

ELEVATION - BENT 6

LOOKING AHEAD

¼" = 1'-0"

NOTES:

1. Pedestals shall be cast level at the elevations shown in "ELEVATION - BENT 6". See Dwg. No. 66939 for "PEDESTAL PLAN" & "TYPICAL PEDESTAL DETAILS".
2. See Dwg. No. 66939 for "SECTION B-B", "SECTION C-C", "SECTION D-D", "VIEW E-E", and Dwg. No. 66890 for "VIEW F-F" & "VIEW G-G" for placement of reinforcing.
3. See Dwg. No. 66939 for "SIDEWALK & CURB DETAIL".
4. See Dwg. No. 66890 for "LAYOUT OF PILES".
5. Measured at beginning of wing.
6. 1'-9" minimum lapped splice length
7. 2'-8" minimum lapped splice length
8. 3'-5" minimum lapped splice length

NOTES:

See Dwg. No. 66940 for Wing Views and Sections.

See Dwg. No. 66942 for Three Dimensional View of Wing.

STATE OF ARKANSAS
LICENSED PROFESSIONAL ENGINEER
No. 9235
9/22/23
CHARLES R. ELLIS
BRIDGE ENGINEER

SHEET 2 OF 3
DETAILS OF END BENTS
HEARTSILL CREEK (SITE 2)

ROUTE SEC.

ARKANSAS STATE HIGHWAY COMMISSION

LITTLE ROCK, ARK.

DRAWN BY: CGP DATE: 09/06/2023 FILENAME: b040861x2_b1.dgn
CHECKED BY: WAC DATE: 09/07/2023 SCALE: AS NOTED
DESIGNED BY: PGT DATE: 08/2023

BRIDGE NO. 07642 DRAWING NO. 66889

PRINT DATE: 9/22/2023

DATE REVISED	DATE REVISED	FED. RD. DIST. NO.	STATE	JOB NO.	SHEET NO.	TOTAL SHEETS
		6	ARK.	040861	150	291
		07642 - END BENTS - 66890				

BAR LIST

MARK	BENT 1 NO. REQ'D	BENT 1 LENGTH	BENT 1 "A"	BENT 6 NO. REQ'D	BENT 6 LENGTH	BENT 6 "A"	P.D.
B401	12	32'-0"		8	40'-1"		Str.
B402	7	9'-3"		7	7'-7"		Str.
B403	32	33'-0"	32'-0"	32	40'-1"	39'-1"	2"
B404	2	11'-0"	9'-6"	2	9'-4"	7'-10"	2"
B405	2	10'-3"	8'-10"	2	8'-8"	7'-3"	2"
B406	75	9'-4"		63	9'-4"		2"
B407	30	16'-0"		26	16'-0"		2"
B408	6	8'-1"		6	7'-7"		Str.
B409	8	3'-2"		8	3'-2"		2"
B410	2	5'-4"		2	5'-4"		2"
B411	2	5'-6"		2	5'-6"		2"
B412	36	5'-3"		36	5'-3"		2"
B413	36	5'-7"		36	5'-7"		2"
B414	9	9'-8"		9	9'-8"		2"
B415	16	32'-0"		---	---		Str.
B501	112	13'-4"		97	13'-4"		2½"
B502	18	8'-5"		18	8'-5"		2½"
B503	100	5'-8"		84	5'-8"		Str.
B504	16	10'-9"	9'-1"	16	8'-9"	7'-1"	3¾"
B505	16	6'-5"	4'-9"	16	6'-8"	5'-0"	3¾"
B601	12	48'-7"	48'-6"	12	41'-7"	40'-11"	4½"
B602	14	47'-6"		14	40'-7"		Str.
F601	12	2'-8"		12	2'-8"		Str.
F602	24	11'-5"		24	11'-5"		4½"
R401E	68	6'-4"		52	6'-4"		(1)
R402E	16	16'-8"		16	12'-8"		Str.
W401E	68	3'-11"		52	3'-11"		(1)
W402	56	(3)		40	(3)		2"
W701	68	16'-8"		68	12'-8"		Str.

BENDING DIAGRAMS

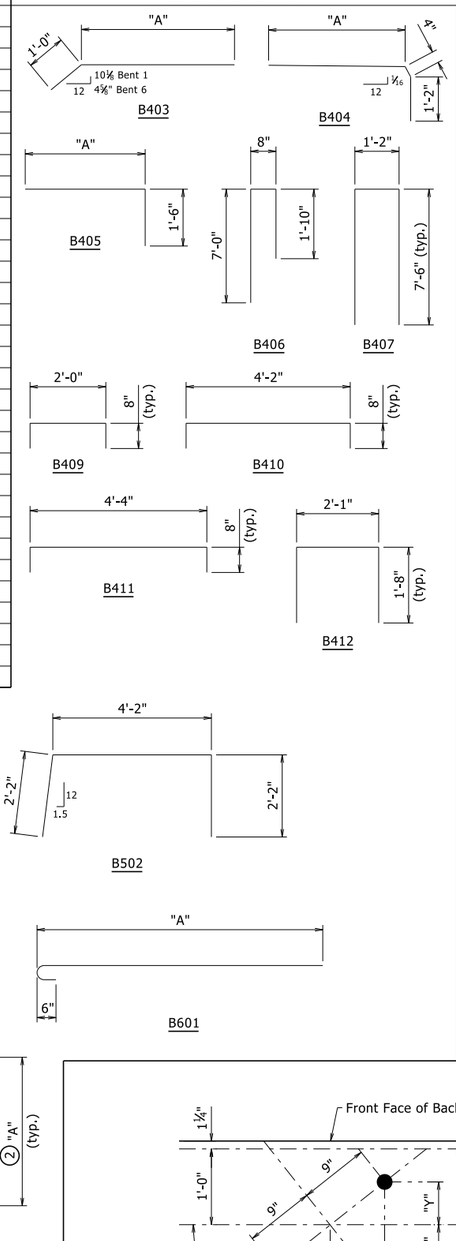

Dimensions are out to out of bars.
Bars with the "E" suffix shall be epoxy coated.

(1) See Std. Dwg. No. 55070 for details of rail reinforcing and location of bars with an "R" prefix & W401E.

(2) Bent 1 Wing A - 8'-6¾"
Bent 1 Wing B - 7'-11⅞"
Bent 6 Wing A - 7'-11"
Bent 6 Wing B - 8'-5½"

(3) Bent 1 Wing A - 17'-9¾"
Bent 1 Wing B - 16'-8¾"
Bent 6 Wing A - 16'-7"
Bent 6 Wing B - 17'-8"

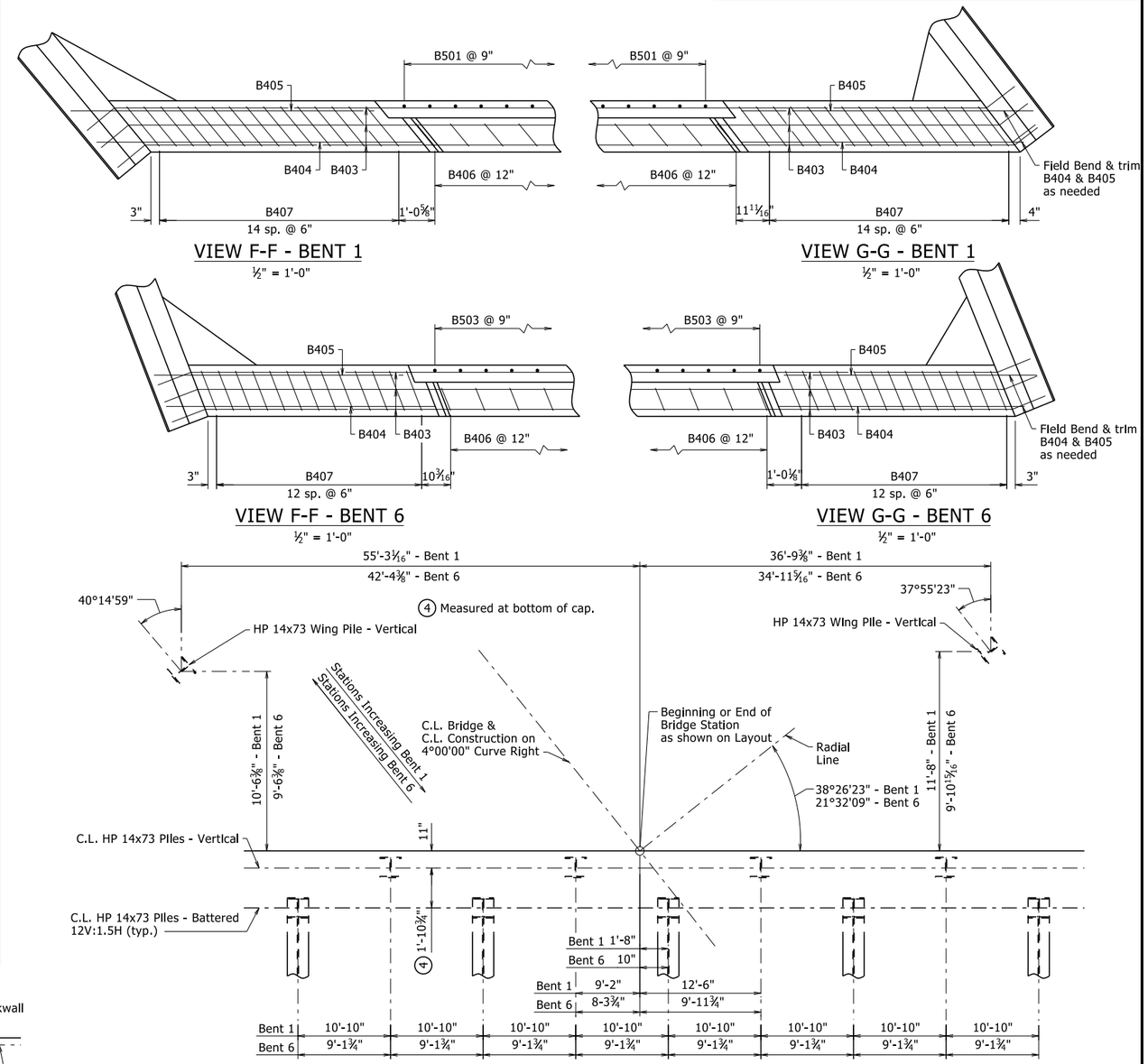

LAYOUT OF PILES
NO SCALE

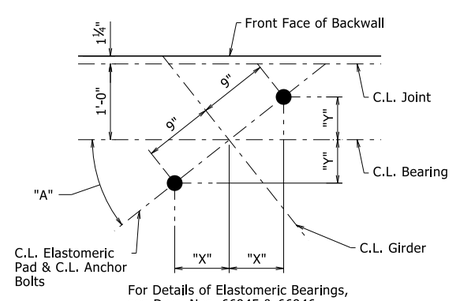

For Details of Elastomeric Bearings, see Dwg. Nos. 66945 & 66946.

TYPICAL ANCHOR BOLT LAYOUT
NO SCALE

	"A"	"X"	"Y"
Girder 1	39°26'33"	7"	5 11/16"
Girder 2	39°09'29"	7"	5 11/16"
Girder 3	38°52'43"	7"	5⅝"
Girder 4	38°36'12"	7"	5⅝"
Girder 5	38°19'56"	7 1/16"	5 9/16"
Girder 6	38°03'57"	7⅛"	5½"
Girder 7	37°48'10"	7⅛"	5½"
Girder 8	37°32'39"	7⅛"	5½"
Girder 9	37°17'21"	7⅛"	5½"

STATE OF ARKANSAS
LICENSED PROFESSIONAL ENGINEER
No. 9235
9/22/23
CHARLES R. ELLIS
BRIDGE ENGINEER

SHEET 3 OF 3
DETAILS OF END BENTS
HEARTSILL CREEK (SITE 2)

ROUTE SEC.
ARKANSAS STATE HIGHWAY COMMISSION
LITTLE ROCK, ARK.

DRAWN BY: CGP DATE: 08/07/2023
CHECKED BY: WAC DATE: 08/31/2023
DESIGNED BY: PGT DATE: 08/2023
FILENAME: b040861x2_b1.dgn
SCALE: AS NOTED

BRIDGE NO. 07642 DRAWING NO. 66890

PRINT DATE: 9/22/2023

DATE REVISED	DATE REVISED	FED. RD. DIST. NO.	STATE	JOB NO.	SHEET NO.	TOTAL SHEETS
		6	ARK.	040861	151	291
		07642 - INTERMEDIATE BENTS - 66891				

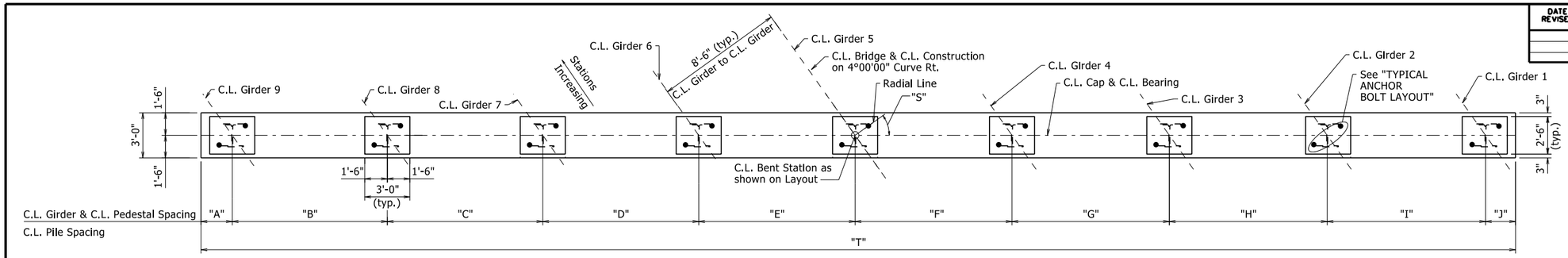

PLAN

¼" = 1'-0"

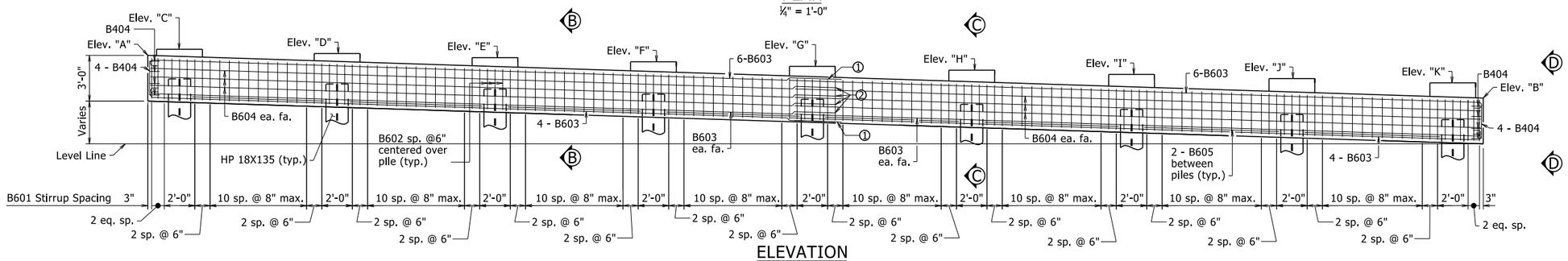

ELEVATION

LOOKING AHEAD

¼" = 1'-0"

TABLE OF VARIABLES - ELEVATION

Bent	Elev. "A"	Elev. "B"	Elev. "C"	Elev. "D"	Elev. "E"	Elev. "F"	Elev. "G"	Elev. "H"	Elev. "I"	Elev. "J"	Elev. "K"
2	495.55	492.74	495.95	495.67	495.40	495.13	494.85	494.58	494.30	494.03	493.75
3	495.26	492.55	495.66	495.39	495.12	494.85	494.58	494.31	494.04	493.77	493.50
4	494.89	492.26	495.28	495.01	494.74	494.48	494.21	493.94	493.67	493.40	493.13
5	494.51	491.96	494.90	494.63	494.35	494.08	493.81	493.54	493.27	492.99	492.72

TABLE OF VARIABLES - PLAN

Bent	"A"	"B"	"C"	"D"	"E"	"F"	"G"	"H"	"I"	"J"	"S"	"T"
2	2'-0 15/16"	10'-3 7/8"	10'-4 3/16"	10'-4 9/16"	10'-4 15/16"	10'-5 3/16"	10'-5 11/16"	10'-6 1/16"	10'-6 1/2"	1'-11 15/16"	35°23'00"	88'-0"
3	1'-10 11/16"	9'-11 1/16"	9'-11 5/16"	9'-11 9/16"	9'-11 7/8"	10'-0 1/8"	10'-0 7/16"	10'-0 11/16"	10'-1"	2'-1 3/16"	31°47'00"	84'-6"
4	2'-2 1/2"	9'-7 1/16"	9'-7 1/4"	9'-7 7/16"	9'-7 5/8"	9'-7 13/16"	9'-8"	9'-8 1/4"	9'-8 7/16"	2'-1 5/8"	28°11'00"	82'-0"
5	2'-2 7/16"	9'-3 11/16"	9'-3 13/16"	9'-3 15/16"	9'-4 1/8"	9'-4 1/4"	9'-4 3/8"	9'-4 1/2"	9'-4 11/16"	2'-0 3/16"	24°35'00"	79'-6"

BAR LIST-PER BENT

MARK	NO. REQ'D	LENGTH	P.D.
B401	36	6'-11"	2"
B402	45	6'-5"	2"
B403	"K"	10'-0"	2"
B404	16	3'-8"	2"
B601	126	11'-10"	4½"
B602	27	7'-8"	4½"
B603	24	"V"	4½"
B604	12	"W"	Str.
B605	16	"Z"	Str.

BENDING DIAGRAMS

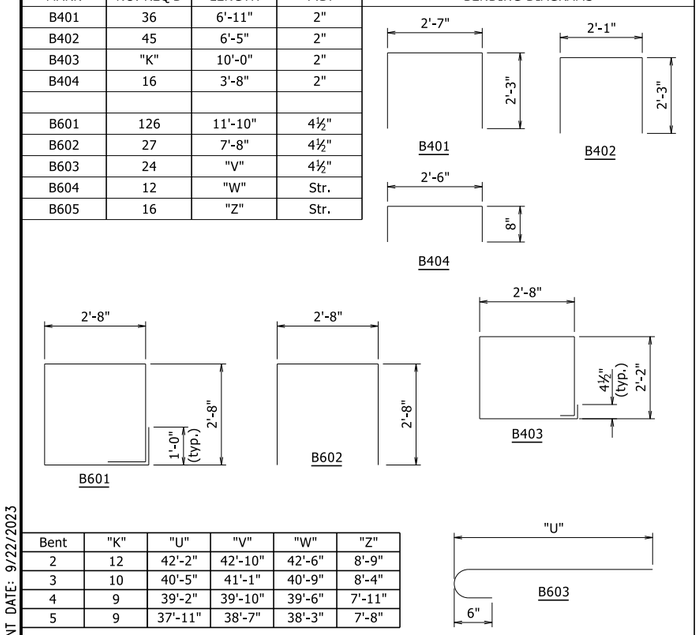

Bent	"K"	"U"	"V"	"W"	"Z"
2	12	42'-2"	42'-10"	42'-6"	8'-9"
3	10	40'-5"	41'-1"	40'-9"	8'-4"
4	9	39'-2"	39'-10"	39'-6"	7'-11"
5	9	37'-11"	38'-7"	38'-3"	7'-8"

Dimensions are out to out of bars.

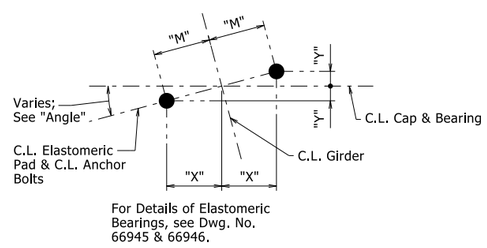

TYPICAL ANCHOR BOLT LAYOUT

NO SCALE

Bent	Girder	"X"	"Y"	Angle	Bent	Girder	"X"	"Y"	Angle
2	1	10 7/16"	7 1/16"	36°22'44"	4	1	11 5/8"	6 7/16"	28°55'57"
	2	10½"	7 1/16"	36°07'28"		2	11 5/8"	6 3/8"	28°44'28"
	3	10 9/16"	7 5/8"	35°52'25"		3	11 5/8"	6 5/16"	28°33'10"
	4	10 9/16"	7½"	35°37'36"		4	11 1/16"	6 5/16"	28°22'00"
	5	10 5/8"	7½"	35°23'00"		5	11 1/16"	6¼"	28°11'00"
	6	10 5/8"	7½"	35°08'37"		6	11 1/16"	6¼"	28°00'09"
	7	10 11/16"	7 7/16"	34°54'27"		7	11¾"	6 3/16"	27°49'26"
	8	10 11/16"	7 3/8"	34°40'29"		8	11¾"	6⅛"	27°38'52"
	9	10¾"	7 3/8"	34°26'43"		9	11¾"	6⅛"	27°28'26"
3	1	11 3/16"	7⅛"	32°39'02"	5	1	11¾"	5 9/16"	25°13'20"
	2	11 3/16"	7⅛"	32°25'45"		2	11¾"	5½"	25°03'34"
	3	11 3/16"	7 1/16"	32°12'39"		3	11 13/16"	5½"	24°53'55"
	4	11¼"	7 1/16"	31°59'44"		4	11 13/16"	5 7/16"	24°44'24"
	5	11¼"	7"	31°47'00"		5	11 13/16"	5 7/16"	24°35'00"
	6	11 5/16"	6 15/16"	31°34'27"		6	11 13/16"	5⅜"	24°25'44"
	7	11 5/16"	6⅞"	31°22'04"		7	11⅞"	5⅜"	24°16'35"
	8	11 5/16"	6⅞"	31°09'52"		8	11⅞"	5 5/16"	24°07'32"
	9	11⅜"	6 13/16"	30°57'50"		9	11⅞"	5 5/16"	23°58'37"

See Dwg. No. 66943 for "SECTION B-B", "SECTION C-C", & "VIEW D-D".

① 3'-5" minimum lapped splice length

② 2'-8" minimum lapped splice length

③ Pedestals shall be cast level at the elevations shown in "ELEVATION". See Dwg. No. 66943 for "PEDESTAL PLAN" & "TYPICAL PEDESTAL DETAILS".

Bent No.	"M"
2	13"
3	13¼"
4	13¼"
5	13"

STATE OF ARKANSAS
Charles R. Ellis
9/22/23 7:50:11 2023 9/22 7:50 AM
LICENSED PROFESSIONAL ENGINEER
No. 9235
CHARLES R. ELLIS

BRIDGE ENGINEER

DETAILS OF INTERMEDIATE BENTS
HEARTSILL CREEK (SITE 2)

ROUTE SEC.

ARKANSAS STATE HIGHWAY COMMISSION

LITTLE ROCK, ARK.

DRAWN BY: RD DATE: 08/28/2023
CHECKED BY: NAC DATE: 09/06/2023
DESIGNED BY: PGT DATE: 08/2023
FILENAME: b040861x2_b2.dgn
SCALE: AS NOTED

BRIDGE NO. 07642 DRAWING NO. 66891

PRINT DATE: 9/22/2023

DATE REVISED	DATE REVISED	FED. RD. DIST. NO.	STATE	JOB NO.	SHEET NO.	TOTAL SHEETS
		6	ARK.	040861	152	291
		07642		- 420'-0" UNIT -		66892

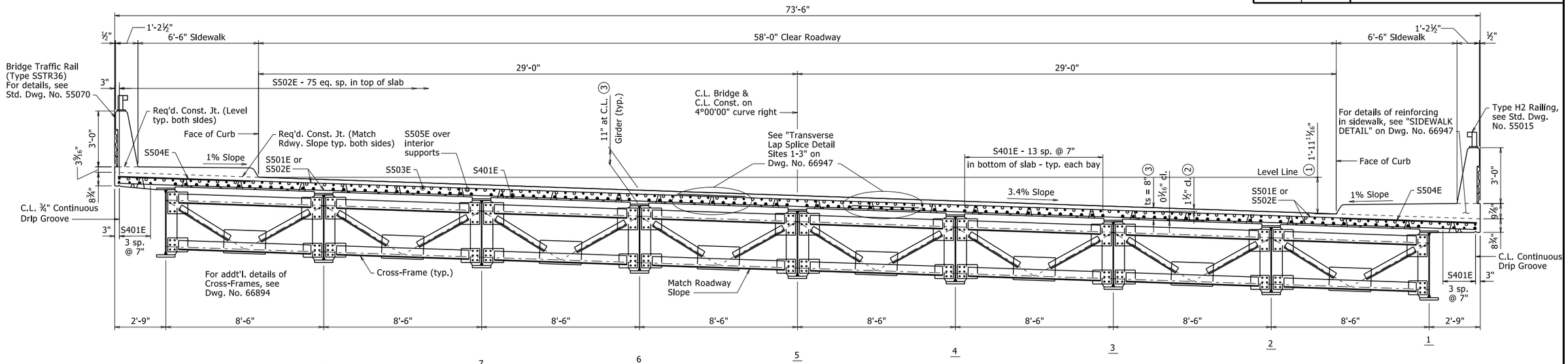

TYPICAL ROADWAY SECTION

Looking Ahead
⅜" = 1'-0"

① Vertical Distance at Top of Deck from Left to Right Gutterline.

② Tolerance: Minus = ¼";
Plus = Equal to amount of slab thickening used to meet slab thickness tolerance. See "ADJUSTMENT FOR SLAB THICKNESS TOLERANCE" on Std. Dwg. No. 55007.

③ See "ADJUSTMENT FOR SLAB THICKNESS TOLERANCE" on Std. Dwg. No. 55007.

Expansion Device:
Rdwy. Channel - C15x33.9
Connection angle - ∠8" x 4" x ½"
Detail Device ⅛" high & provide ¼" shims using 2-1/16" & 1-⅛" PLs

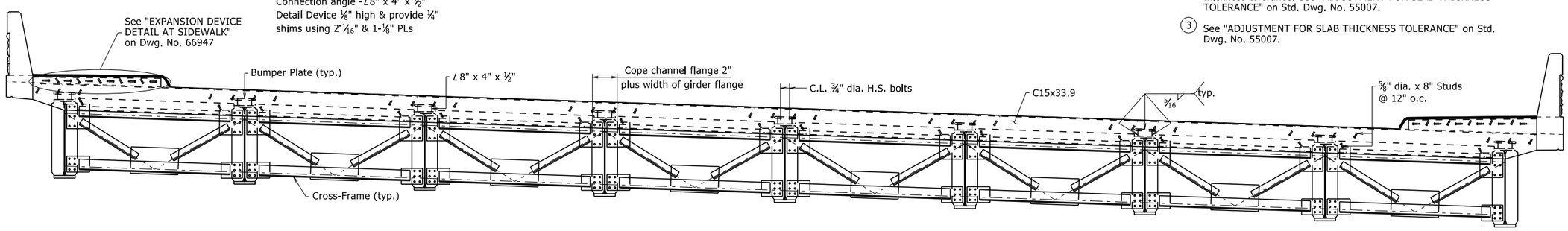

TYPICAL ROADWAY SECTION NEAR JOINT

Looking Ahead
Bent 1 Shown
⅜" = 1'-0"

Sidewalk Reinforcing:

Longitudinal: K401E in top as shown

Transverse: K402E & K403E @ 12" o.c. or
K404E @ beg. bridge
K405E @ end bridge

Slab Reinforcing:

Longitudinal: S503E in Top and S401E in Bottom (placed as shown)
S505E Add'l. Top over Interior Support, see "Reinforcing Plan" on Dwg. No. 66896.

Transverse: S501E & S502E @ 6" o.c. in top & bottom
S504E @ 6" o.c. in top of overhangs (bundled with #5 bars)
S506E @ beg. bridge or S509E @ end bridge

All horizontal dimensions shown are measured along a line radial to C.L. Construction.

Bar positions or clearances from the forms shall be maintained by means of stays, ties, hangers, or other approved devices per Subsection 804.06. Placement of slab bolsters or high chairs with full-length lower runners directly on removable deck forms will not be allowed.

Class 2 Protective Surface Treatment shall be applied to the Roadway Surface, Sidewalk Surface (including curbing), and the Roadway Face and Top of Concrete Bridge Rail in accordance with Section 803.

Class 3 Textured Coating Finish shall be applied to bridge surfaces as specified in Special Provision "Textured Coating Finish" and in accordance with Subsection 802.19(b)(3).

STATE OF ARKANSAS
LICENSED PROFESSIONAL ENGINEER
No. 9235
9/22/23
CHARLES R. ELLIS
Charles R. Ellis
9/22/2023 9:22 AM

BRIDGE ENGINEER

SHEET 1 OF 6
DETAILS OF 420'-0"
CONTINUOUS PLATE GIRDER UNIT
HEARTSILL CREEK (SITE 2)

ROUTE SEC.

ARKANSAS STATE HIGHWAY COMMISSION

LITTLE ROCK, ARK.

DRAWN BY:	CTM	DATE:	6/27/2023	FILENAME:	b040861x2_s1.dgn
CHECKED BY:	JSQ	DATE:	8/29/23	SCALE:	XXXXX
DESIGNED BY:	CTM	DATE:	6/2023		

BRIDGE NO. 07642 DRAWING NO. 66892

PRINT DATE: 9/22/2023

DATE REVISED	DATE REVISED	FED. RD. DIST. NO.	STATE	JOB NO.	SHEET NO.	TOTAL SHEETS
		6	ARK.	040861	153	291
		07642		- 420'-0" UNIT -	66893	

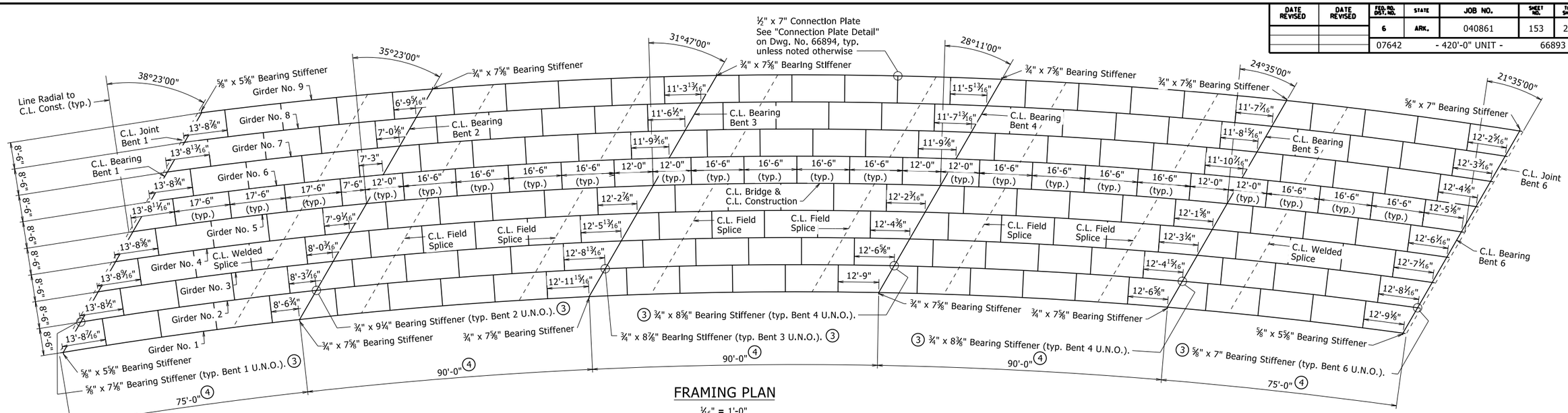

FRAMING PLAN

1/16" = 1'-0"

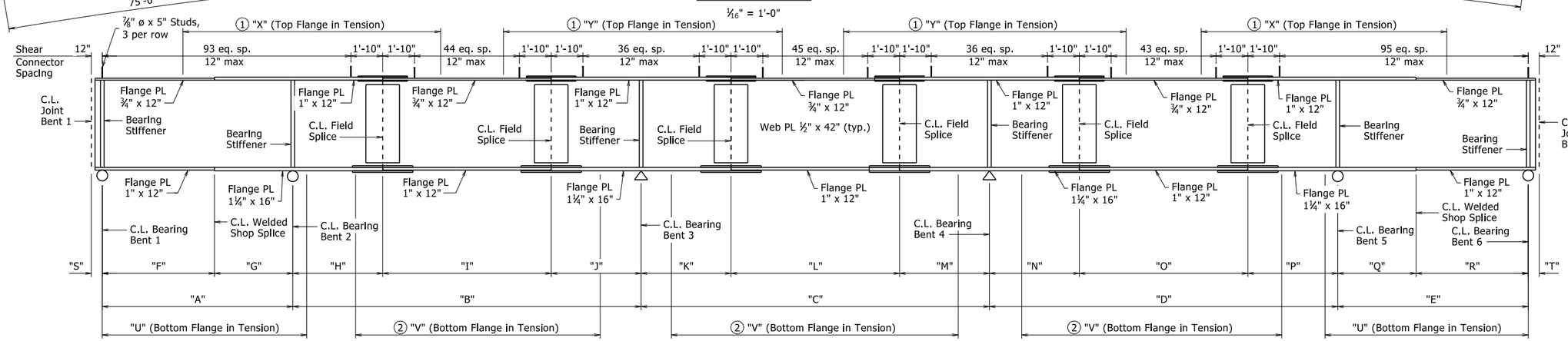

GIRDER ELEVATION

No Scale

TABLE OF VARIABLES

Girder No.	"A"	"B"	"C"	"D"	"E"	"F"	"G"	"H"	"I"	"J"	"K"	"L"	"M"	"N"	"O"	"P"	"Q"	"R"	"S"	"T"	"U"	"V"	"X"	"Y"
Girder 1	74'-9 3/16"	90'-11 15/16"	90'-9"	90'-6 5/8"	74'-3 1/8"	53'-9 1/4"	20'-11 15/16"	19'-6 1/8"	49'-6 1/2"	21'-11 5/16"	19'-5 7/16"	50'-5"	20'-10 9/16"	20'-5"	48'-3 9/16"	21'-10 1/8"	19'-4 7/16"	54'-10 5/8"	1'-3 9/16"	1'-0 15/16"	64'-0"	69'-0"	77'-0"	86'-0"
Girder 2	74'-5 15/16"	90'-8 13/16"	90'-6 3/8"	90'-4 15/16"	74'-2 1/16"	53'-6 7/8"	20'-11 1/8"	19'-5 3/8"	49'-4 13/16"	21'-10 3/8"	19'-4 7/8"	50'-3 1/16"	20'-10 1/16"	20'-4 3/16"	48'-2 5/8"	21'-9 3/4"	19'-4 3/16"	54'-9 13/16"	1'-3 1/2"	1'-0 15/16"	65'-0"	72'-0"	70'-0"	73'-0"
Girder 3	74'-2 3/4"	90'-5 13/16"	90'-4 3/8"	90'-3 1/4"	74'-1 1/16"	53'-4 1/2"	20'-10 1/4"	19'-4 11/16"	49'-3 3/16"	21'-9 15/16"	19'-4 3/8"	50'-2 7/16"	20'-9 5/8"	20'- 4 1/8"	48'-1 3/4"	21'-9 3/8"	19'-3 7/8"	54'-9 3/16"	1'-3 7/16"	1'-0 15/16"	64'-0"	70'-0"	74'-0"	77'-0"
Girder 4	73'-11 11/16"	90'-2 7/8"	90'-2 3/16"	90'-1 5/8"	74'-0 1/16"	53'-2 1/4"	20'-9 1/2"	19'-4"	49'-1 9/16"	21'-9 5/16"	19'-3 13/16"	50'-1 3/16"	20'-9 1/8"	20'-3 11/16"	48'-0 7/8"	21'-9 1/16"	19'-3 9/16"	54'-8 1/2"	1'-3 3/8"	1'-0 15/16"	65'-0"	72'-0"	70'-0"	73'-0"
Girder 5	73'-8 1/16"	90'-0"	90'-0"	90'-0"	73'-11 1/16"	53'-0"	20'-8 1/16"	19'-3 5/16"	49'-0"	21'-8 1/16"	19'-3 5/16"	50'-0"	20'-8 1/16"	20'-3 5/16"	48'-0"	21'-8 1/16"	19'-3 5/16"	54'-7 13/16"	1'-3 5/16"	1'-0 15/16"	64'-0"	71'-0"	70'-0"	72'-0"
Girder 6	73'-5 13/16"	89'-9 3/16"	89'-9 7/8"	89'-10 7/16"	73'-10 1/8"	52'-9 13/16"	20'-7 15/16"	19'-2 5/8"	48'-10 1/2"	21'-8 1/16"	19'-2 13/16"	49'-10 13/16"	20'-8 1/4"	20'-2 15/16"	47'-11 3/16"	21'-8 3/8"	19'-3"	54'-7 1/8"	1'-3 1/4"	1'-0 7/8"	64'-0"	71'-0"	73'-0"	77'-0"
Girder 7	73'-2 15/16"	89'-6 1/2"	89'-7 13/16"	89'-8 7/8"	73'-9 3/16"	52'-7 3/4"	20'-7 3/16"	19'-2"	48'-9"	21'-7 1/2"	19'-2 5/16"	49'-9 11/16"	20'-7 13/16"	20'-2 1/2"	47'-10 3/8"	21'-8 1/16"	19'-2 3/4"	54'-6 7/16"	1'-3 3/16"	1'-0 7/8"	64'-0"	71'-0"	73'-0"	72'-0"
Girder 8	73'-0 3/16"	89'-3 13/16"	89'-5 13/16"	89'-7 7/16"	73'-8 5/16"	52'-5 11/16"	20'-6 1/2"	19'-1 3/8"	48'-7 9/16"	21'-6 15/16"	19'-1 13/16"	49'-8 9/16"	20'-7 7/16"	20'-2 1/8"	47'-9 3/8"	21'-7 11/16"	19'-2 1/2"	54'-5 13/16"	1'-3 1/8"	1'-0 7/8"	65'-0"	71'-0"	75'-0"	82'-0"
Girder 9	72'-9 1/2"	89'-1 1/4"	89'-3 13/16"	89'-5 15/16"	73'-7 7/16"	52'-3 11/16"	20'-5 13/16"	19'-0 3/4"	48'-6 1/8"	21'-6 3/8"	19'-1 3/8"	49'-7 7/16"	20'-7"	20'-1 3/4"	47'-8 3/4"	21'-7 3/8"	19'-2 1/4"	54'-5 3/16"	1'-3 1/16"	1'-0 7/8"	64'-0"	71'-0"	75'-0"	82'-0"

1. Centered over C.L. Bearing.
2. Centered at midpoint of span.
3. See "Bearing Stiffener Detail" on Dwg. No. 66894.
4. Measured along C.L. Const.

All girders are placed concentric to C.L. Construction. Unless noted otherwise, all Cross-Frames are placed on radial lines. Cross-Frames at Bents are skewed along C.L. Bearing.

Skew is measured at C.L. Joint for End Bents and C.L. Bent for Intermediate Bents.

The erection of the structural steel shall be performed according to a plan permitting the steel to be erected plumb with bolts tightened while the steel is as close as possible to the steel dead load condition.

For details of bolted field splices, bearing stiffeners, and connection plates, see Dwg. No. 66894.

All Structural Steel shall be ASTM A709 Gr. 50W unless otherwise noted and shall be paid for as "Structural Steel in Plate Girder Spans (ASTM A709, Gr. 50W)". See Standard Dwg. Nos. 55006 and 55007 for additional notes and details.

STATE OF ARKANSAS
Charles R. Ellis
9/22/2023 9:23 AM
LICENSED PROFESSIONAL ENGINEER
No. 9235
9/22/23
CHARLES R. ELLIS

BRIDGE ENGINEER

SHEET 2 OF 6
DETAILS OF 420'-0"
CONTINUOUS PLATE GIRDER UNIT
HEARTSILL CREEK (SITE 2)

ROUTE SEC.

ARKANSAS STATE HIGHWAY COMMISSION

LITTLE ROCK, ARK.

DRAWN BY: CTM DATE: 6/27/2023 FILENAME: b040861x2_s1.dgn
CHECKED BY: JSQ DATE: 8/29/23 SCALE: As Shown
DESIGNED BY: CTM DATE: 6/2023

BRIDGE NO. 07642 DRAWING NO. 66893

PRINT DATE: 9/22/2023

DATE REVISED	DATE REVISED	FED. RD. DIST. NO.	STATE	JOB NO.	SHEET NO.	TOTAL SHEETS
		6	ARK.	040861	154	291
		07642		- 420'-0" UNIT -	66894	

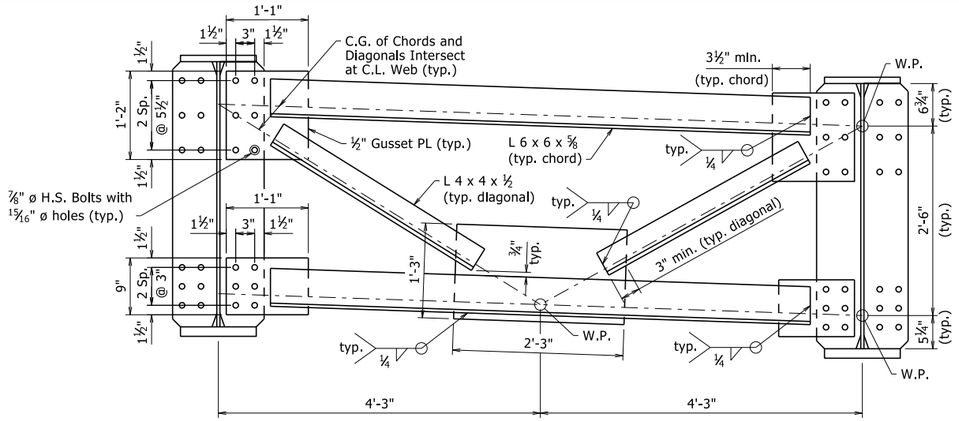

DETAILS OF CROSS-FRAMES AT CONNECTION PLATES

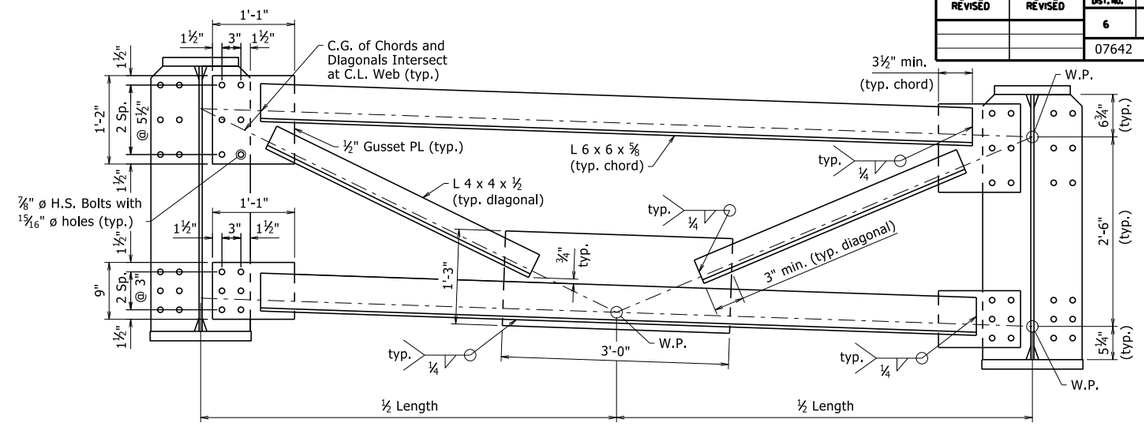

DETAILS OF CROSS-FRAMES AT BENTS 2 THRU 5

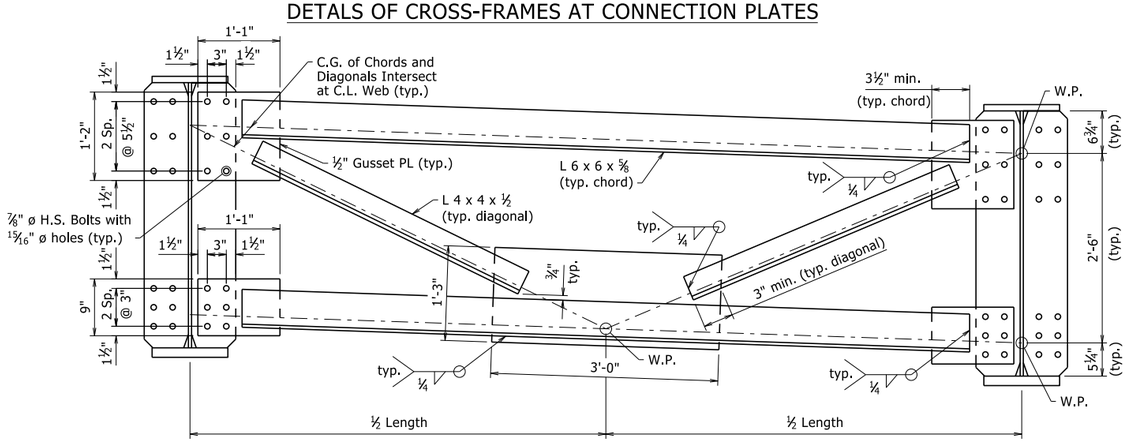

DETAILS OF CROSS-FRAMES AT BENTS 1 & 6

NOTE: All Bearing Stiffeners shall be vertical in final position.

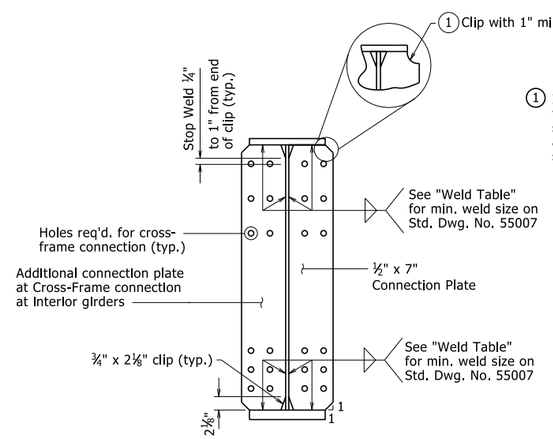

CONNECTION PLATE DETAIL

1 If permanent steel bridge deck forms are used, the Fabricator shall clip plates as necessary to accommodate the deck form supports.

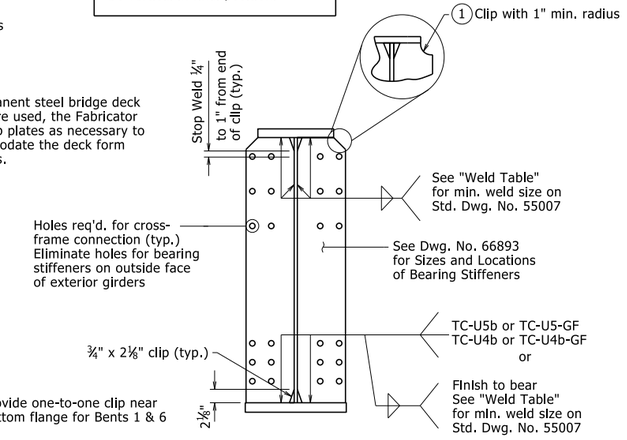

2 Provide one-to-one clip near bottom flange for Bents 1 & 6

BEARING STIFFENER DETAIL

Bents 2 thru 5 Shown, Bents 1 & 6 Similar 2

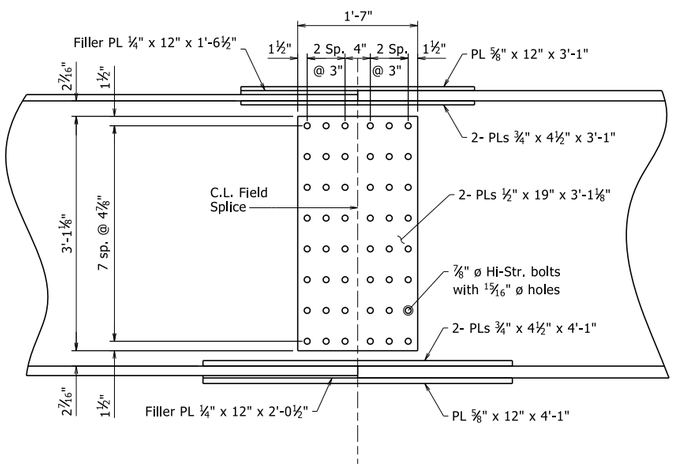

WEB SPLICE

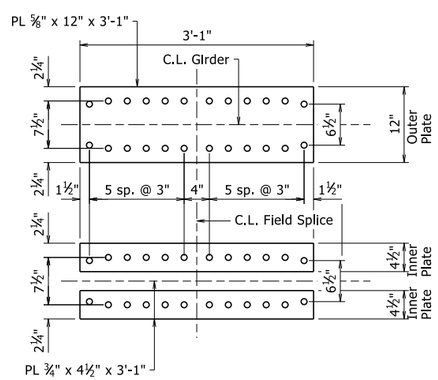

TOP FLANGE SPLICE

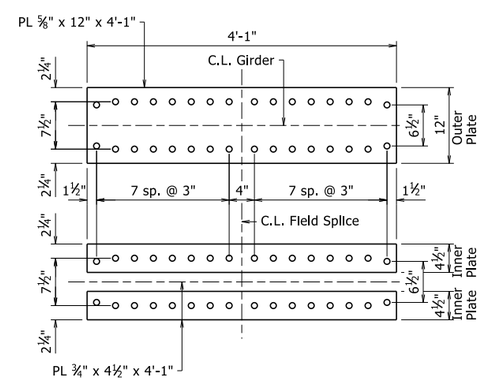

BOTTOM FLANGE SPLICE

All field splice bolts shall be ⅞" ø Hi-Str. bolts.

All holes for splice bolts 15/16" ø.

All field splice plates shall be ASTM A709, Gr. 50W.

Bolted field splices may be eliminated or shop weld splices may be substituted with the approval of the Engineer. Payment will be made on the basis of plan quantities.

STATE OF ARKANSAS
LICENSED PROFESSIONAL ENGINEER
No. 9235
9/22/23
CHARLES R. ELLIS
BRIDGE ENGINEER

SHEET 3 OF 6
DETAILS OF 420'-0"
CONTINUOUS PLATE GIRDER UNIT
HEARTSILL CREEK (SITE 2)

ROUTE SEC.

ARKANSAS STATE HIGHWAY COMMISSION
LITTLE ROCK, ARK.

DRAWN BY:	CTM	DATE:	6/27/2023	FILENAME:	b040861x2_s1.dgn
CHECKED BY:	JSQ	DATE:	8/29/23	SCALE:	1" = 1'-0"
DESIGNED BY:	CTM	DATE:	6/2023		

BRIDGE NO. 07642 DRAWING NO. 66894

PRINT DATE: 9/22/2023

DATE REVISED	DATE REVISED	FED. RD. DIST. NO.	STATE	JOB NO.	SHEET NO.	TOTAL SHEETS
		6	ARK.	040861	155	291
		07642		- 420'-0" UNIT -		66895

TABLE OF DEAD LOAD DEFLECTIONS (INCHES)

Span	Point of Deflection	Structural Steel									Structural Steel + Slab									Structural Steel + Slab + Rail + Sidewalk								
		Girder 1	Girder 2	Girder 3	Girder 4	Girder 5	Girder 6	Girder 7	Girder 8	Girder 9	Girder 1	Girder 2	Girder 3	Girder 4	Girder 5	Girder 6	Girder 7	Girder 8	Girder 9	Girder 1	Girder 2	Girder 3	Girder 4	Girder 5	Girder 6	Girder 7	Girder 8	Girder 9
1	0.0	0	0	0	0	0	0	0	0	0	0	0	0	0	0	0	0	0	0	0	0	0	0	0	0	0	0	0
	0.1	0.044	0.049	0.048	0.047	0.047	0.046	0.045	0.045	0.043	0.280	0.332	0.326	0.323	0.319	0.314	0.309	0.305	0.277	0.346	0.366	0.346	0.341	0.336	0.331	0.327	0.330	0.328
	0.2	0.082	0.090	0.088	0.087	0.086	0.084	0.083	0.082	0.080	0.515	0.612	0.600	0.594	0.587	0.577	0.568	0.560	0.512	0.638	0.673	0.637	0.626	0.619	0.608	0.601	0.607	0.609
	0.3	0.108	0.117	0.114	0.113	0.112	0.110	0.108	0.107	0.104	0.678	0.799	0.783	0.775	0.766	0.753	0.741	0.731	0.665	0.842	0.878	0.830	0.817	0.808	0.794	0.785	0.794	0.793
	0.4	0.118	0.128	0.126	0.124	0.123	0.121	0.119	0.118	0.114	0.740	0.878	0.861	0.853	0.843	0.828	0.817	0.805	0.731	0.921	0.963	0.913	0.899	0.889	0.873	0.865	0.875	0.872
	0.5	0.112	0.123	0.120	0.119	0.118	0.116	0.114	0.112	0.109	0.710	0.840	0.824	0.816	0.808	0.793	0.783	0.771	0.701	0.885	0.919	0.873	0.860	0.852	0.836	0.829	0.840	0.836
	0.6	0.094	0.102	0.100	0.099	0.098	0.096	0.095	0.094	0.090	0.592	0.702	0.688	0.683	0.673	0.662	0.653	0.645	0.582	0.739	0.766	0.728	0.720	0.710	0.698	0.691	0.703	0.694
	0.7	0.066	0.072	0.071	0.070	0.069	0.068	0.067	0.066	0.063	0.420	0.500	0.490	0.487	0.478	0.470	0.464	0.458	0.409	0.526	0.544	0.519	0.513	0.504	0.496	0.491	0.500	0.487
	0.8	0.036	0.039	0.038	0.038	0.038	0.037	0.037	0.036	0.035	0.228	0.272	0.267	0.267	0.263	0.259	0.256	0.254	0.229	0.284	0.294	0.282	0.281	0.277	0.273	0.271	0.277	0.271
	0.9	0.011	0.012	0.012	0.012	0.011	0.011	0.011	0.011	0.011	0.075	0.088	0.085	0.086	0.083	0.081	0.080	0.080	0.075	0.093	0.095	0.090	0.091	0.088	0.085	0.085	0.087	0.089
2	0.0	0	0	0	0	0	0	0	0	0	0	0	0	0	0	0	0	0	0	0	0	0	0	0	0	0	0	0
	0.1	0.012	0.015	0.015	0.014	0.015	0.015	0.014	0.014	0.012	0.065	0.086	0.087	0.083	0.084	0.084	0.083	0.080	0.063	0.084	0.097	0.093	0.088	0.089	0.089	0.088	0.087	0.081
	0.2	0.044	0.049	0.049	0.047	0.049	0.048	0.048	0.046	0.042	0.249	0.300	0.298	0.289	0.300	0.293	0.294	0.279	0.240	0.315	0.334	0.317	0.305	0.317	0.310	0.312	0.304	0.300
	0.3	0.078	0.088	0.087	0.085	0.085	0.084	0.084	0.082	0.074	0.450	0.552	0.546	0.533	0.535	0.528	0.524	0.510	0.431	0.567	0.611	0.580	0.563	0.565	0.558	0.556	0.557	0.532
	0.4	0.105	0.116	0.115	0.113	0.113	0.111	0.111	0.108	0.098	0.612	0.739	0.731	0.714	0.715	0.705	0.700	0.681	0.579	0.770	0.816	0.776	0.754	0.755	0.745	0.743	0.745	0.711
	0.5	0.114	0.127	0.126	0.124	0.124	0.122	0.121	0.118	0.109	0.670	0.814	0.805	0.787	0.788	0.776	0.771	0.750	0.651	0.843	0.896	0.854	0.831	0.832	0.820	0.818	0.823	0.797
	0.6	0.105	0.117	0.116	0.113	0.114	0.112	0.111	0.108	0.100	0.616	0.749	0.740	0.723	0.724	0.712	0.708	0.688	0.597	0.776	0.822	0.785	0.764	0.765	0.752	0.752	0.756	0.730
	0.7	0.079	0.088	0.088	0.086	0.086	0.084	0.084	0.081	0.075	0.464	0.566	0.558	0.543	0.545	0.535	0.532	0.515	0.443	0.587	0.620	0.592	0.574	0.576	0.566	0.565	0.568	0.544
	0.8	0.045	0.050	0.049	0.048	0.049	0.048	0.048	0.046	0.042	0.259	0.318	0.312	0.305	0.308	0.301	0.301	0.291	0.249	0.330	0.347	0.331	0.323	0.326	0.319	0.320	0.323	0.309
	0.9	0.015	0.016	0.016	0.016	0.016	0.015	0.015	0.015	0.012	0.085	0.104	0.101	0.099	0.100	0.096	0.095	0.091	0.070	0.111	0.113	0.108	0.106	0.107	0.102	0.102	0.103	0.090
3	0.0	0	0	0	0	0	0	0	0	0	0	0	0	0	0	0	0	0	0	0	0	0	0	0	0	0	0	0
	0.1	0.014	0.016	0.016	0.016	0.015	0.016	0.015	0.016	0.014	0.084	0.106	0.107	0.105	0.102	0.104	0.101	0.105	0.087	0.105	0.118	0.114	0.111	0.108	0.110	0.107	0.112	0.105
	0.2	0.046	0.053	0.052	0.051	0.049	0.050	0.049	0.050	0.045	0.281	0.339	0.338	0.335	0.324	0.329	0.319	0.328	0.277	0.350	0.376	0.360	0.353	0.342	0.347	0.337	0.354	0.336
	0.3	0.081	0.092	0.090	0.088	0.087	0.087	0.086	0.086	0.078	0.489	0.594	0.591	0.582	0.571	0.572	0.564	0.569	0.486	0.609	0.657	0.628	0.614	0.603	0.603	0.597	0.617	0.587
	0.4	0.108	0.122	0.118	0.116	0.114	0.114	0.112	0.113	0.103	0.655	0.791	0.778	0.767	0.754	0.754	0.742	0.748	0.638	0.815	0.873	0.826	0.809	0.796	0.795	0.786	0.813	0.770
	0.5	0.117	0.133	0.129	0.127	0.125	0.125	0.123	0.124	0.114	0.710	0.860	0.852	0.840	0.826	0.826	0.813	0.818	0.708	0.884	0.947	0.904	0.886	0.872	0.871	0.862	0.892	0.853
	0.6	0.107	0.123	0.119	0.117	0.115	0.115	0.113	0.114	0.105	0.650	0.791	0.782	0.771	0.759	0.757	0.746	0.750	0.650	0.810	0.868	0.829	0.813	0.801	0.799	0.791	0.819	0.784
	0.7	0.081	0.094	0.090	0.088	0.087	0.086	0.085	0.086	0.079	0.492	0.600	0.591	0.582	0.572	0.571	0.562	0.565	0.490	0.615	0.656	0.626	0.614	0.604	0.603	0.596	0.619	0.592
	0.8	0.046	0.055	0.051	0.050	0.050	0.050	0.049	0.049	0.045	0.280	0.347	0.339	0.334	0.329	0.329	0.324	0.327	0.283	0.350	0.378	0.359	0.353	0.348	0.347	0.344	0.359	0.343
	0.9	0.016	0.019	0.017	0.017	0.016	0.016	0.016	0.016	0.014	0.096	0.120	0.114	0.112	0.109	0.108	0.106	0.107	0.088	0.121	0.130	0.121	0.119	0.116	0.115	0.113	0.119	0.108
4	0.0	0	0	0	0	0	0	0	0	0	0	0	0	0	0	0	0	0	0	0	0	0	0	0	0	0	0	0
	0.1	0.013	0.012	0.015	0.015	0.015	0.015	0.015	0.015	0.013	0.072	0.084	0.091	0.091	0.093	0.091	0.092	0.088	0.075	0.093	0.096	0.098	0.097	0.099	0.097	0.098	0.096	0.093
	0.2	0.044	0.044	0.049	0.049	0.049	0.048	0.049	0.047	0.044	0.256	0.296	0.307	0.303	0.307	0.299	0.304	0.292	0.258	0.325	0.332	0.328	0.321	0.325	0.317	0.323	0.318	0.318
	0.3	0.077	0.081	0.086	0.086	0.086	0.085	0.085	0.083	0.077	0.453	0.537	0.546	0.541	0.544	0.536	0.537	0.525	0.454	0.573	0.599	0.582	0.572	0.575	0.567	0.570	0.574	0.555
	0.4	0.104	0.108	0.114	0.114	0.114	0.112	0.113	0.110	0.103	0.611	0.714	0.723	0.720	0.724	0.711	0.715	0.699	0.611	0.772	0.794	0.770	0.762	0.766	0.752	0.760	0.766	0.746
	0.5	0.113	0.119	0.124	0.123	0.124	0.122	0.122	0.120	0.111	0.664	0.782	0.792	0.782	0.784	0.774	0.773	0.760	0.660	0.839	0.868	0.843	0.827	0.829	0.819	0.822	0.834	0.805
	0.6	0.104	0.109	0.114	0.113	0.113	0.112	0.111	0.110	0.101	0.607	0.711	0.722	0.711	0.713	0.705	0.703	0.693	0.600	0.769	0.787	0.768	0.752	0.754	0.746	0.748	0.762	0.733
	0.7	0.078	0.082	0.086	0.084	0.085	0.084	0.083	0.082	0.075	0.452	0.526	0.537	0.527	0.528	0.522	0.519	0.513	0.440	0.576	0.582	0.572	0.558	0.559	0.553	0.553	0.566	0.540
	0.8	0.044	0.046	0.049	0.048	0.048	0.048	0.047	0.047	0.043	0.249	0.291	0.300	0.293	0.295	0.291	0.289	0.287	0.245	0.320	0.322	0.320	0.311	0.313	0.309	0.308	0.318	0.304
	0.9	0.015	0.014	0.015	0.015	0.015	0.015	0.015	0.015	0.012	0.079	0.085	0.090	0.086	0.087	0.085	0.084	0.084	0.065	0.105	0.095	0.097	0.092	0.093	0.091	0.091	0.095	0.085
5	0.0	0	0	0	0	0	0	0	0	0	0	0	0	0	0	0	0	0	0	0	0	0	0	0	0	0	0	0
	0.1	0.010	0.012	0.012	0.013	0.012	0.012	0.012	0.012	0.011	0.069	0.087	0.086	0.091	0.087	0.089	0.088	0.088	0.077	0.086	0.096	0.092	0.097	0.092	0.095	0.094	0.095	0.093
	0.2	0.035	0.041	0.039	0.039	0.039	0.039	0.039	0.038	0.036	0.222	0.282	0.271	0.275	0.274	0.271	0.271	0.264	0.236	0.276	0.311	0.289	0.291	0.290	0.287	0.287	0.286	0.283
	0.3	0.064	0.075	0.072	0.072	0.072	0.072	0.071	0.069	0.067	0.408	0.510	0.494	0.500	0.499	0.496	0.492	0.477	0.436	0.506	0.562	0.527	0.529	0.528	0.525	0.522	0.519	0.525
	0.4	0.091	0.106	0.102	0.102	0.102	0.101	0.101	0.099	0.095	0.574	0.718	0.699	0.703	0.704	0.696	0.693	0.681	0.614	0.712	0.792	0.745	0.744	0.744	0.736	0.736	0.743	0.738
	0.5	0.110	0.127	0.122	0.123	0.123	0.121	0.121	0.119	0.115	0.696	0.859	0.838	0.841	0.844	0.832	0.830	0.814	0.737	0.863	0.946	0.893	0.889	0.892	0.880	0.881	0.889	0.884
	0.6	0.116	0.132	0.128	0.128	0.129	0.127	0.127	0.124	0.120	0.733	0.896	0.874	0.878	0.881	0.867	0.866	0.849	0.768	0.909	0.985	0.931	0.928	0.931	0.917	0.920	0.929	0.920
	0.7	0.106	0.121	0.117	0.118	0.118	0.116	0.116	0.114	0.110	0.667	0.820	0.799	0.804	0.806	0.793	0.791	0.777	0.704	0.827	0.901	0.851	0.850	0.852	0.838	0.840	0.851	0.842
	0.8	0.081	0.093	0.090	0.091	0.091	0.089	0.089	0.087	0.084	0.512	0.630	0.612	0.620	0.621	0.608	0.607	0.596	0.540	0.633	0.691	0.651	0.656	0.656	0.643	0.645	0.653	0.645
	0.9	0.044	0.051	0.049	0.049	0.049	0.049	0.048	0.048	0.046	0.279	0.342	0.333	0.336	0.337	0.331	0.330	0.324	0.295	0.343	0.375	0.354	0.355	0.356	0.350	0.351	0.355	0.352
	0.0	0	0	0	0	0	0	0	0	0	0	0	0	0	0	0	0	0	0	0	0	0	0	0	0	0	0	0

Camber for Dead Load Deflection ± ¼" tolerance. Deflections shown are along C.L. Girder from the plane perpendicular to the web extending from C.L. Bearing to C.L. Bearing. Negative sign (-) indicates point above chord. Vertical curve corrections are not included.

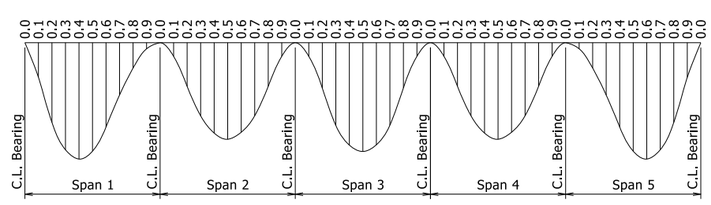

DEAD LOAD DEFLECTION DIAGRAM

No Scale

STATE OF ARKANSAS
LICENSED PROFESSIONAL ENGINEER
No. 9235
9/22/23
CHARLES R. ELLIS

BRIDGE ENGINEER

SHEET 4 OF 6
DETAILS OF 420'-0"
CONTINUOUS PLATE GIRDER UNIT
HEARTSILL CREEK (SITE 2)

ROUTE SEC.

ARKANSAS STATE HIGHWAY COMMISSION

LITTLE ROCK, ARK.

DRAWN BY: CTM DATE: 6/27/2023 FILENAME: b040861x2_s1.dgn
CHECKED BY: JSQ DATE: 8/29/23 SCALE: No Scale
DESIGNED BY: CTM DATE: 6/2023

BRIDGE NO. 07642 DRAWING NO. 66895

PRINT DATE: 9/22/2023

DATE REVISED	DATE REVISED	FED. RD. DIST. NO.	STATE	JOB NO.	SHEET NO.	TOTAL SHEETS
		6	ARK.	040861	156	291
		07642		- 420'-0" UNIT -	66896	

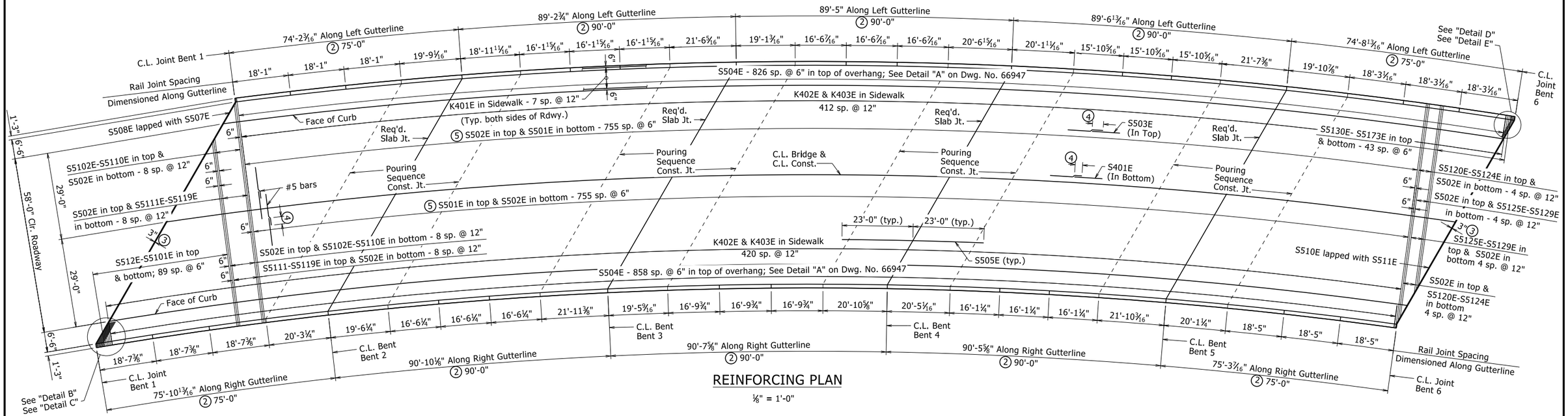

REINFORCING PLAN

1/8" = 1'-0"

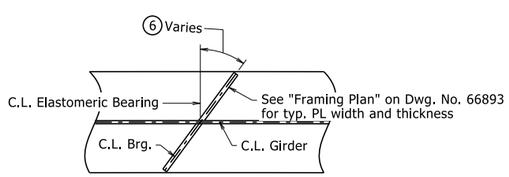

INTERIOR GIRDERS

(6) See Dwg. Nos. 66889, 66890, 66891 & 66893.

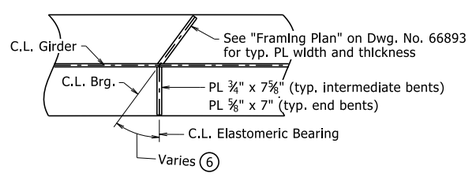

EXTERIOR GIRDERS

(Girder 1 shown, Girder 9 similar)

TYPICAL BEARING STIFFENERS

No Scale

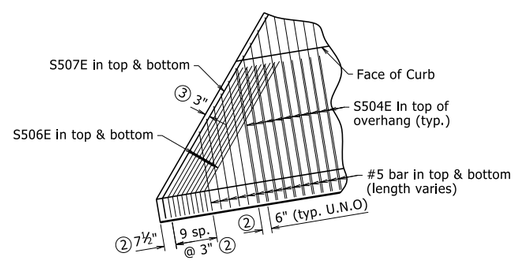

DETAIL B

1/4"= 1'-0"

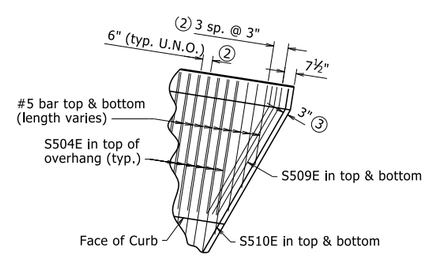

DETAIL D

1/4"= 1'-0"

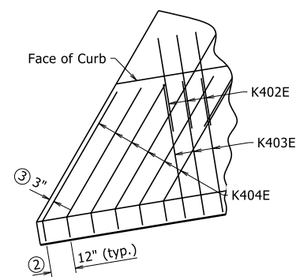

DETAIL C

1/4"= 1'-0"

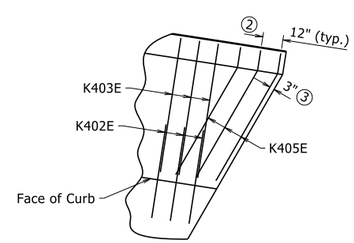

DETAIL E

1/4"= 1'-0"

C.L. Bridge is in a 4°00'00" Horizontal Curve to the Right. All longitudinal lines and longitudinal reinforcing steel shall be placed on curves concentric with C.L. Bridge. All transverse reinforcing steel shall be placed on radial lines and shall be measured along C.L. Bridge. Unless noted otherwise, all longitudinal dimensions are along C.L. Bridge & C.L. Construction.

See Std. Dwg. No. 55070 for additional details of bridge traffic railing.

See Dwg. No. 66897 for Bar List.

(1) Placed as shown in "TYPICAL ROADWAY SECTION," Dwg. No. 66892.

(2) Measured Along C.L. Construction.

(3) Measured to C.L. Joint.

(4) Minimum Lap for Bars:
2'-5" - #4 Bars
3'-7" - #5 Bars

(5) Alternate bars and bar splice locations about C.L. Bridge. See "TRANSVERSE LAP SPLICE DETAIL SITES 1-3" on Dwg. No. 66947.

STATE OF ARKANSAS
LICENSED PROFESSIONAL ENGINEER
No. 9235
9/22/23
CHARLES R. ELLIS

BRIDGE ENGINEER

SHEET 5 OF 6
DETAILS OF 420'-0"
CONTINUOUS PLATE GIRDER UNIT
HEARTSILL CREEK (SITE 2)

ROUTE SEC.

ARKANSAS STATE HIGHWAY COMMISSION

LITTLE ROCK, ARK.

DRAWN BY:	CTM	DATE:	6/27/2023	FILENAME:	b040861x2_s1.dgn
CHECKED BY:	JSQ	DATE:	8/29/23	SCALE:	As Shown
DESIGNED BY:	CTM	DATE:	6/2023		

BRIDGE NO. 07642 DRAWING NO. 66896

PRINT DATE: 9/22/2023

DATE REVISED	DATE REVISED	FED. RD. DIST. NO.	STATE	JOB NO.	SHEET NO.	TOTAL SHEETS
		6	ARK.	040861	157	291
		07642		- 420'-0" UNIT -	66897	

BAR LIST

Slab and Sidewalk				Railing			
MARK	NO. REQ'D.	LENGTH	P.D.	MARK	NO. REQ'D.	(1) LENGTH	P.D.
S401E	1200	44'-6"	Str.	(1) R401E	1708	6'-4"	2½", 3"
S501E	1510	43'-1"	Str.	(1) R402E	32	5'-6"	Str.
S502E	1551	33'-9"	Str.	(1) R403E	1708	4'-3"	3", 3¾"
S503E	616	56'-1"	Str.	(1) R404E	32	12'-8"	Str.
S504E	1666	7'-2"	Str.	(1) R405E	24	18'-3"	Str.
S505E	304	46'-0"	Str.	(1) R406E	8	19'-11"	Str.
S506E	18	9'-0"	3¾"	(1) R407E	8	19'-2"	Str.
S507E	2	50'-0"	3¾"	(1) R408E	24	16'-2"	Str.
S508E	2	46'-5"	3¾"	(1) R409E	16	21'-7"	Str.
S509E	6	7'-7"	3¾"	(1) R410E	8	19'-1"	Str.
S510E	2	42'-11"	3¾"	(1) R411E	24	16'-5"	Str.
S511E	2	39'-4"	3¾"	(1) R412E	8	20'-6"	Str.
S512E-S5101E	90	4'-3"-59'-11"	Str.	(1) R413E	8	20'-1"	Str.
				(1) R414E	24	15'-9"	Str.
S5102E-S5110E	2 ea.	30'-6"-41'-1"	Str.	(1) R415E	16	21'-6"	Str.
S5111E-S5119E	2 ea.	31'-2"-41'-9"	Str.	(1) R416E	8	19'-9"	Str.
S5120E-S5124E	2 ea.	31'-3"-40'-11"	Str.	(1) R417E	24	18'-1"	Str.
S5125E-S5129E	2 ea.	39'-9"-30'-0"	Str.	(1) R418E	24	17'-9"	Str.
S5130E-S5173E	2 ea.	4'-3"-59'-0"	Str.	(1) R419E	8	19'-5"	Str.
K401E	160	44'-10"	Str.				
K402E	834	5'-6"	3"	(1) R420E	8	18'-8"	Str.
K403E	834	7'-2"	Str.	(1) R421E	24	15'-9"	Str.
K404E	6	8'-11"	Str.	(1) R422E	8	21'-2"	Str.
K405E	3	7'-7"	Str.	(1) R423E	8	18'-9"	Str.
				(1) R424E	24	16'-2"	Str.
				(1) R425E	8	20'-2"	Str.
				(1) R426E	8	19'-9"	Str.
				(1) R427E	24	15'-6"	Str.
				(1) R428E	8	21'-3"	Str.
				(1) R429E	8	19'-6"	Str.
				(1) R430E	24	17'-11"	Str.

Bars designated with an "E" suffix are epoxy coated.

(1) See Std. Dwg. No. 55070 for additional details.

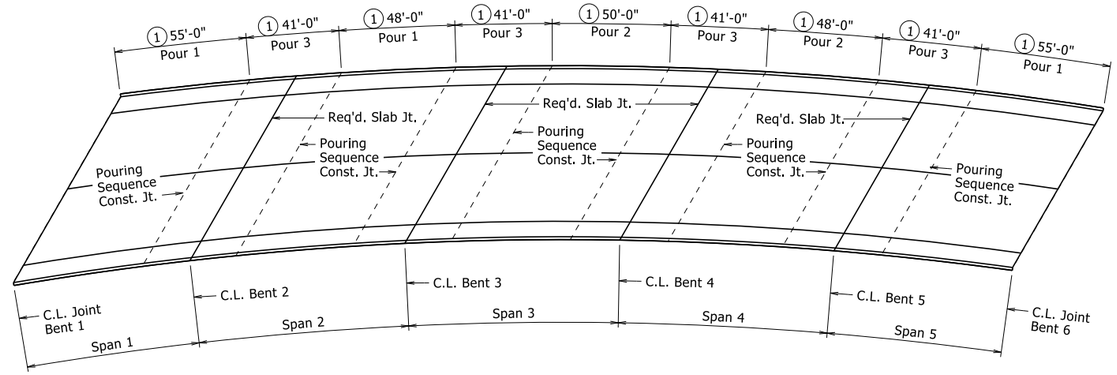

SLAB POURING SEQUENCE

1/32" = 1'-0"

(1) Measured along C.L. Construction

POURING SEQUENCE NOTES

Pours with the same number may be placed simultaneously or separately. All pours (1) must be placed before pours (2) can be placed. All pours (2) must be placed before pours (3) can be placed. A minimum of 48 hours shall elapse between the end of a pour and the start of the next pour. A minimum of 72 hours shall elapse between the end of a pour and the start of an adjacent pour. A minimum of 72 hours shall elapse between completion of the slab and the pouring of the sidewalk. A minimum of 72 hours shall elapse between completion of the sidewalk and pouring of the bridge rail. Any railing or sidewalk pours made before the entire slab unit has been placed must be approved by the Engineer. The Contractor must obtain approval from the Engineer for any deviations from the pouring sequence shown.

Concrete shall be placed, consolidated, and screeded off for the entire pour before any concrete has taken its initial set. This may require the use of a retarding agent.

Required slab joints and pouring sequence construction joints shall align with open joints at the front face of the rail.

TABLE OF VARIABLES
BRIDGE TRAFFIC RAILING (TYPE SSTR36)

Panel Length	Panel Type	R4XXE	A
18'-7⅜"	Closed	R405E	37
20'-3¼"	Closed	R406E	40
19'-6¼"	Closed	R407E	39
16'-6¼"	Closed	R408E	33
21'-11⅜"	Closed	R409E	43
19'-5 9/16"	Closed	R410E	38
16'-9¾"	Closed	R411E	33
20'-10⅝"	Closed	R412E	41
20'-5 1/16"	Closed	R413E	40
16'-1¼"	Closed	R414E	32
21'-10 3/16"	Closed	R415E	43
20'-1¼"	Closed	R416E	40
18'-5"	Closed	R417E	36
18'-1"	Closed	R418E	36
19'-9 1/16"	Closed	R419E	39
18'-11 11/16"	Closed	R420E	38
16'-1 15/16"	Closed	R421E	32
21'-6 15/16"	Closed	R422E	43
19'-1 3/16"	Closed	R423E	38
16'-6 7/16"	Closed	R424E	33
20'-6 15/16"	Closed	R425E	41
20'-1 11/16"	Closed	R426E	40
15'-10 5/16"	Closed	R427E	31
21'-7⅜"	Closed	R428E	43
19'-10⅞"	Closed	R429E	39
18'-3 1/16"	Closed	R430E	36

Dimensions are out-to-out of bars.

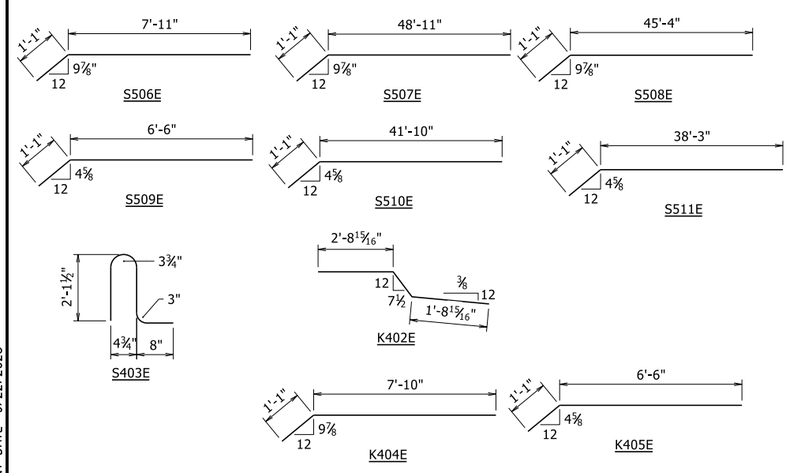

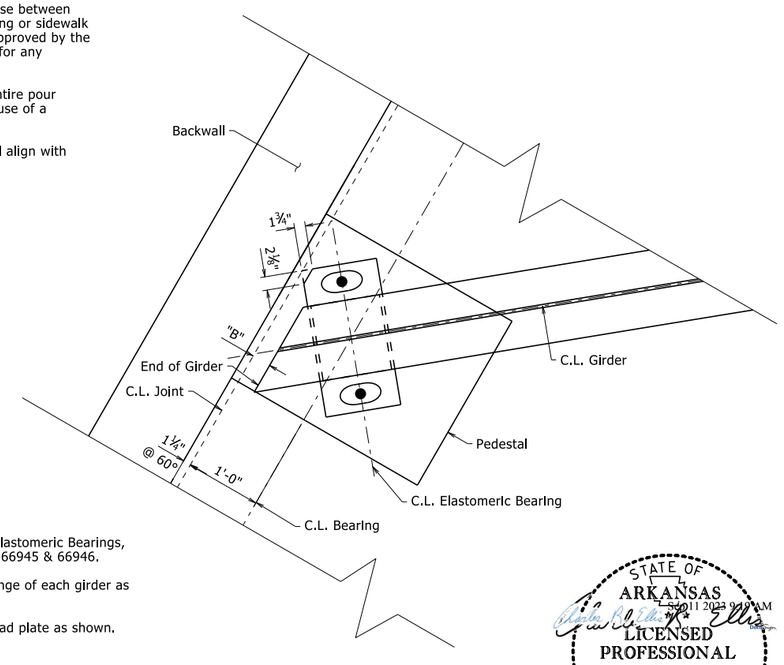

For details of Elastomeric Bearings, See Dwg. Nos. 66945 & 66946.

Clip bottom flange of each girder as shown.

Clip external load plate as shown.

PLAN OF BEARING AT END BENT

1" = 1'-0"

STATE OF ARKANSAS
9/22/2023 9:27 AM
LICENSED PROFESSIONAL ENGINEER
No. 9235
9/22/23
CHARLES R. ELLIS

BRIDGE ENGINEER

SHEET 6 OF 6
DETAILS OF 420'-0"
CONTINUOUS PLATE GIRDER UNIT
HEARTSILL CREEK (SITE 2)

ROUTE SEC.

ARKANSAS STATE HIGHWAY COMMISSION

LITTLE ROCK, ARK.

DRAWN BY: CTM DATE: 6/27/2023 FILENAME: b040861x2_s1.dgn
CHECKED BY: JSQ DATE: 8/29/23 SCALE: No Scale
DESIGNED BY: CTM DATE: 6/2023

BRIDGE NO. 07642 DRAWING NO. 66897

PRINT DATE: 9/22/2023

DATE REVISED	DATE REVISED	FED. RD. DIST. NO.	STATE	JOB NO.	SHEET NO.	TOTAL SHEETS
		6	ARK.	040861	158	291
		07643		- LAYOUT -	66898	

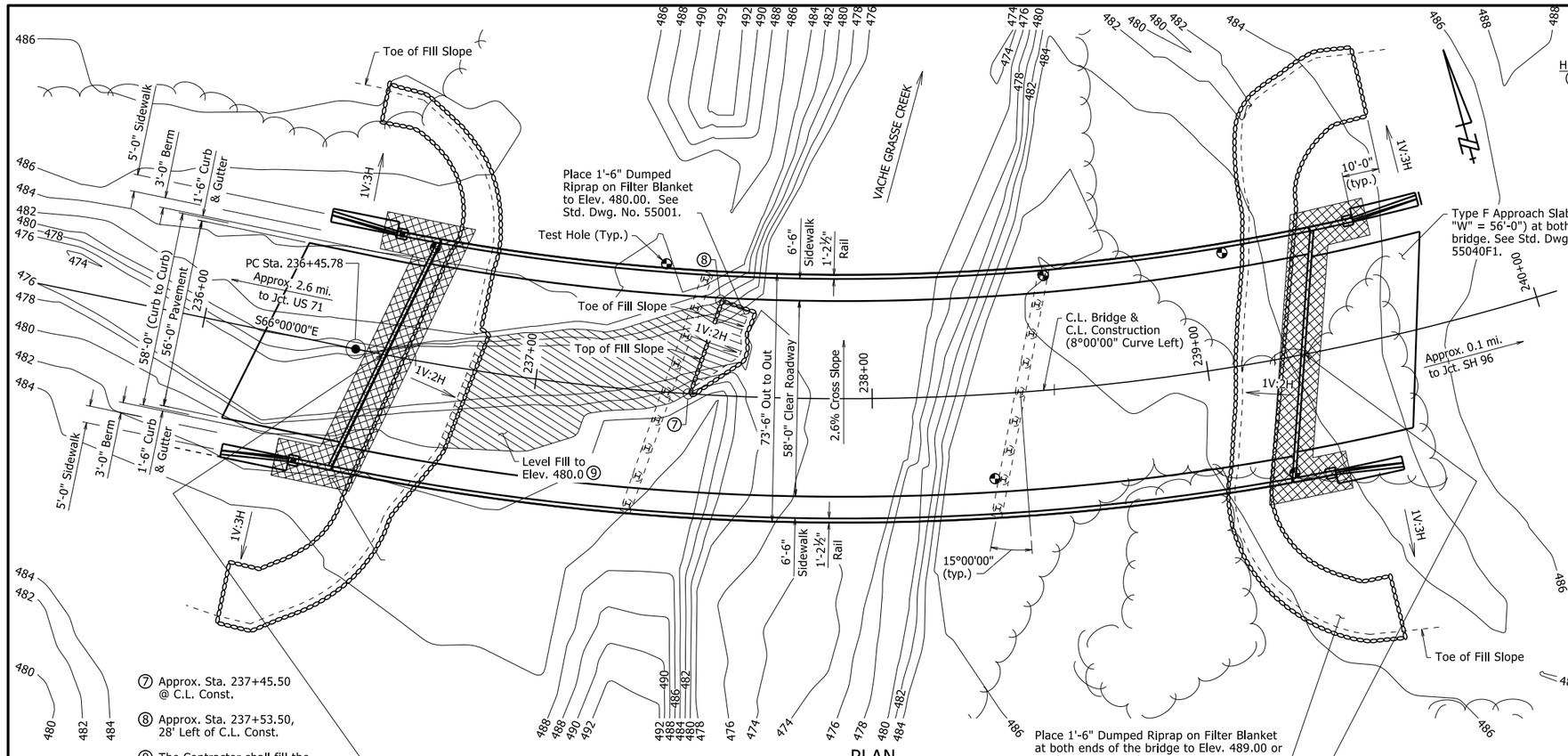

PLAN

⑦ Approx. Sta. 237+45.50 @ C.L. Const.

⑧ Approx. Sta. 237+53.50, 28' Left of C.L. Const.

⑨ The Contractor shall fill the existing channel as shown near the beginning of bridge to Elev. 480.0. Approx. 200 cu. yds. of Compacted Embankment.

HORIZONTAL CURVE DATA
(along C.L. Construction)
PI = 238+99.39
Δ = 39°00'00" Left
D = 8°00'00"
T = 253.62'
L = 487.50'
R = 716.20'
PC = 236+45.78
PT = 241+33.28

NOTES:
For R/W data, see Roadway Plans.

Stations shown are along C.L. Construction. Elevations shown are actual top of deck elevations at C.L. Bridge. Any vertical dimensions referenced to C.L. Deck is based on actual top of deck elevation at C.L. Bridge. See "SUPERELEVATION TRANSITION SKETCH" for additional information.

C.L. Bridge is in a 8°00' curve left. C.L. Girders, and the longitudinal lines of the bridge, approach slabs, and transitional approach railing shall be constructed on curves concentric with C.L. Bridge and C.L. Construction. Bents shall be constructed along lines skewed from radial lines to C.L. Bridge and C.L. Construction. Skew is measured at C.L. Joint for End Bents and C.L. Bent for Intermediate Bents.

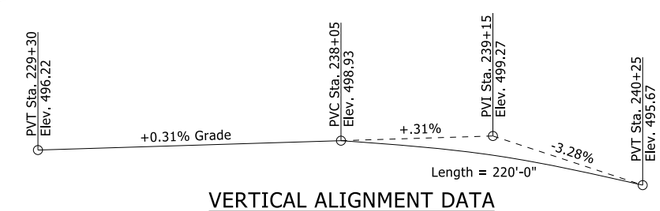

VERTICAL ALIGNMENT DATA

Along C.L. Construction
No Scale

HYDRAULIC DATA

FLOOD DESCRIPTION	FREQUENCY	TOTAL ② DISCHARGE	DISCHARGE THIS SITE	① NATURAL WATER SURFACE ELEVATION	WATER SURFACE ELEV. WITH BACKWATER
	YEARS	CFS	CFS	FEET	FEET
Design	50	16,934	7,294	486.8	488.6
Base	100	20,893	8,829	487.5	489.5
Extreme	500	33,875	13,484	489.3	491.9
Overtopping	>500	-	-	-	-

① Unconstricted water surface elevation without structure or roadway approaches.

② The total discharge includes flow at this Site and Site 2.

Q100 backwater elevation for existing structure = N/A ft.
Proposed Low Bridge Chord elevation = 492.19 ft.

Drainage Area = 42.2 square miles
Historical H.W. Elev. = N/A

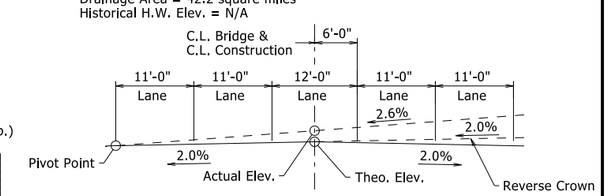

Begin Superelevation Transition	Sta. 234+63.00
Reverse Crown	Sta. 235+99.15
Max. Superelevation	Sta. 236+40.00
Max. Superelevation	Sta. 239+36.00
Reverse Crown	Sta. 239+76.85
End Superelevation Transition	Sta. 241+13.00

SUPERELEVATION TRANSITION SKETCH

Looking Ahead
No Scale

Total Length of Bridge = 275'-3⅜"
1'-1 11/16" | 273'-0" Continuous Plate Girder Unit (84'-105'-84') | 1'-1 11/16"

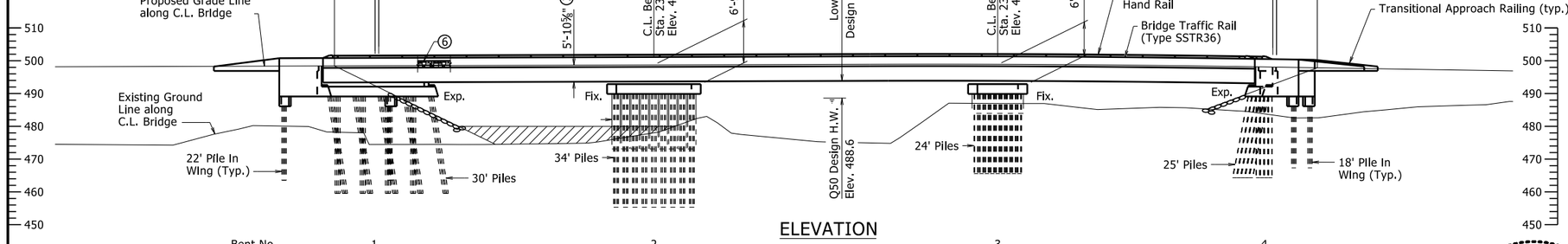

ELEVATION

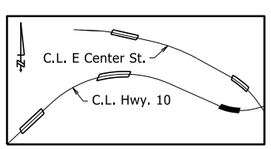

LOCATION SKETCH
No Scale

For General Notes, see Dwg. No. 66873.

For Soil Borings, see Dwg. No. 66899.

③ Measured from top of deck at C.L. Bridge to low steel.

④ Low Steel occurs at Sta. 239+37.35, 34' Left.

⑤ Top of Deck at C.L. Bridge and C.L. Bent to low side top of cap.

⑥ Ashlar Stone Pattern, see Special Provision "Architectural Finish" and Dwg. Nos. 66940 & 66947.

STATE OF ARKANSAS
7-20-11 2023 9:41 AM
LICENSED PROFESSIONAL ENGINEER
No. 9235
9/22/23
CHARLES R. ELLIS
BRIDGE ENGINEER

SHEET 1 OF 2
LAYOUT OF BRIDGE
HIGHWAY 10 OVER VACHE GRASSE CREEK (SITE 3)
HWY. 10 - HWY. 96 (GREENWOOD BYPASS) (S)
SEBASTIAN COUNTY

ROUTE 10 SEC. 0
ARKANSAS STATE HIGHWAY COMMISSION
LITTLE ROCK, ARK.

DRAWN BY: CGP DATE: 9/6/2022
CHECKED BY: JYP DATE: 11/08/2022
DESIGNED BY: CNL DATE: 7/1/2022
FILENAME: b040861x3_L1.dgn
SCALE: 1" = 20' or As Noted

BRIDGE NO. 07643 DRAWING NO. 66898

PRINT DATE: 9/22/2023

DATE REVISED	DATE REVISED	FED. RD. DIST. NO.	STATE	JOB NO.	SHEET NO.	TOTAL SHEETS
		6	ARK.	040861	159	291
		07643		- LAYOUT -		66899

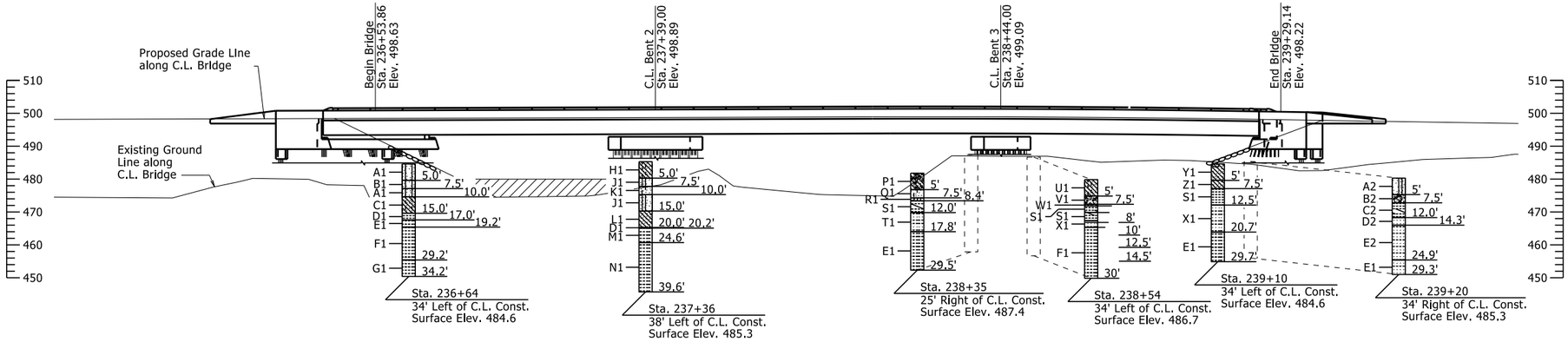

ELEVATION OF SOIL BORINGS

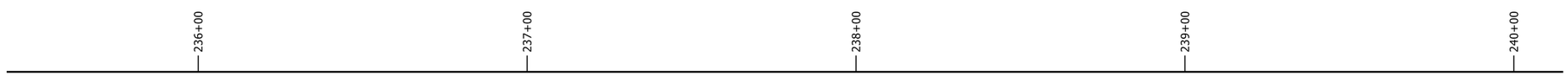

BORING LEGEND

A1-Wet, Very Loose, Brown Sandy Silt
B1-Wet, Very Loose, Brown Silt with Sand
C1-Wet, Very Soft, Brown Sandy Silty Clay
D1-SHALE - Weathered, Medium Hard, Gray
E1-SHALE WITH FREQUENT SANDSTONE PARTINGS AND SEAMS - Unweathered, Medium Hard with Hard Layers, Gray
F1-SHALE WITH FREQUENT SANDSTONE PARTINGS AND SEAMS - Unweathered, Medium Hard with Hard Layers, Occasional Fractures, Gray
G1-SHALE WITH FREQUENT SANDSTONE PARTINGS AND SEAMS - Unweathered, Medium Hard with Hard Layers, Gray
H1-Wet, Very Soft, Brown Silty Clay with Sand
J1-Wet, Very Loose, Reddish Brown Sandy Silt
K1-Wet, Very Loose, Reddish Brown Silty Sand
L1-Moist, Medium Stiff, Brown and Gray Sandy Lean Clay with Trace Rock Fragments
M1-SHALE WITH FREQUENT SANDSTONE PARTINGS - Unweathered, Medium, Occasional Fractures, Gray
N1-SHALE WITH FREQUENT SANDSTONE PARTINGS - Unweathered, Medium Hard, Gray
P1-Moist, Stiff, Reddish Brown Sandy Silty Clay with Some Gravel
Q1-Moist, Medium Dense, Reddish Brown Silty Sand with Some Rock Fragments
R1-Moist, Very Dense, Reddish Brown Sandy Silt with Some Rock Fragments
S1-SHALE - Highly Weathered, Medium Hard, Gray
T1-SHALE WITH INTERBEDDED SANDSTONE - Unweathered, Hard, Gray
U1-Moist, Medium Stiff, Reddish Brown Sandy Silty Clay
V1-Moist, Medium Dense, Reddish Brown Silty Clayey Sand with Gravel (Rock Fragments)
W1-Moist, Medium Dense, Reddish Brown Sandy Silt with Gravel (Rock Fragments)
X1-SHALE WITH INTERBEDDED SANDSTONE - Unweathered, Medium Hard with Hard Layers, Gray
Y1-Moist, Stiff, Brown Lean Clay with Sand
Z1-Moist, Very Stiff, Reddish Brown Sandy Lean Clay with Some Gravel
A2-Moist, Medium Dense, Brown Silty Sand with Trace Rock Fragments
B2-Moist, Dense, Reddish Brown Silty Clayey Gravel with Sand
C2-SHALE - Highly Weathered, Medium Hard, Brown and Gray
D2-SHALE WITH FREQUENT SANDSTONE PARTINGS - Unweathered, Medium Hard with Hard Layers, Gray
E2-SANDSTONE WITH INTERBEDDED SHALE - Unweathered, Medium Hard with Hard Layers, Gray

"N" VALUES

Sta. 236+64 - 34' Left of C.L. Const.
3.0- 4.0,N=0
5.5- 6.5,N=0
8.0- 9.0,N=0
10.5- 11.5,N=3
15.5- 15.6,N=40(1")

Sta. 237+36 - 38' Left of C.L. Const.
3.0- 4.0,N=0
5.5- 6.5,N=1
8.0- 9.0,N=4
10.5- 11.5,N=1
15.5- 16.5,N=10
20.0- 20.2,N=40(2")

Sta. 238+35 - 25' Right of C.L. Const.
3.0- 4.0,N=9
5.5- 6.5,N=12
8.0- 8.7,N=78(8")
10.5- 10.6,N=40(1")

Sta. 238+54 - 34' Left of C.L. Const.
3.0- 4.0,N=7
5.5- 6.5,N=21
8.0- 9.0,N=81
10.5- 10.5,N=60(6")

Sta. 239+10 - 34' Left of C.L. Const.
3.0- 4.0,N=11
5.5- 6.5,N=22
8.0- 9.0,N=94
10.5- 10.5,N=45(6")

Sta. 239+20 - 34' Right of C.L. Const.
3.0- 4.0,N=12
5.5- 6.5,N=41
8.0- 8.5,N=65(6")
10- 10.1,N=30(1")

DETAIL DRAWINGS:	DRAWING NO(S).
End Bents	66900-66902 & 66939-66942
Intermediate Bents	66903 & 66943
Steel H-Piling	66944
Elastomeric Bearings	66945-66946
273'-0" Continuous Plate Girder Unit	66904-66909 & 66947-66948
General Notes For Steel Bridge Structures	55006
Details For Steel Bridge Structures	55007
Poured Silicone Joints	55008
Transitional Approach Railing	55013A
Type H2 Railing	55015
Bridge Traffic Rail	55070

STATE OF ARKANSAS
55011 2023.09.22 9:00 AM
LICENSED PROFESSIONAL ENGINEER
No. 9235
9/22/23
CHARLES R. ELLIS

BRIDGE ENGINEER

SHEET 2 OF 2
LAYOUT OF BRIDGE
HIGHWAY 10 OVER VACHE GRASSE CREEK (SITE 3)
HWY. 10 - HWY. 96 (GREENWOOD BYPASS) (S)
SEBASTIAN COUNTY

ROUTE 10 SEC. 0

ARKANSAS STATE HIGHWAY COMMISSION

LITTLE ROCK, ARK.

DRAWN BY: CGP DATE: 9/6/2022
CHECKED BY: JYP DATE: 11/08/2022
DESIGNED BY: CNL DATE: 7/1/2022
FILENAME: b040861x3_L1.dgn
SCALE: 1" = 20' or As Noted

BRIDGE NO. 07643 DRAWING NO. 66899

PRINT DATE: 9/22/2023

DATE REVISED	DATE REVISED	FED. RD. DIST. NO.	STATE	JOB NO.	SHEET NO.	TOTAL SHEETS
		6	ARK.	040861	160	291
		07643 - END BENTS - 66900				

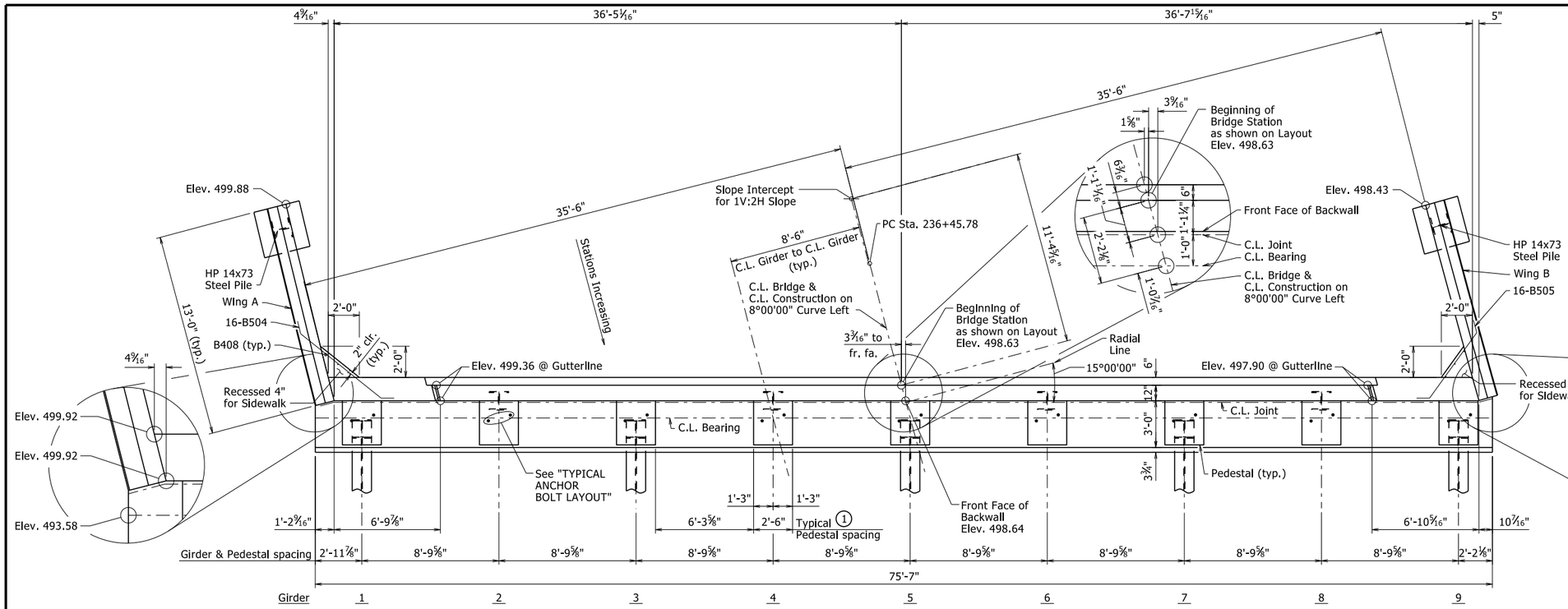

PLAN - BENT 1

¼" = 1'-0"

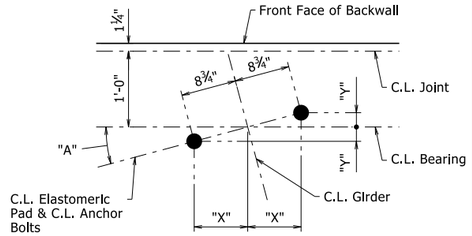

For Details of Elastomeric Bearings, see Dwg. Nos. 66945 & 66946.

TYPICAL ANCHOR BOLT LAYOUT

NO SCALE

	"A"	"X"	"Y"
Girder 1	14°23'02"	8½"	2 3/16"
Girder 2	14°33'09"	8½"	2 3/16"
Girder 3	14°43'28"	8 7/16"	2¼"
Girder 4	14°54'05"	8 7/16"	2¼"
Girder 5	15°04'59"	8 7/16"	2¼"
Girder 6	15°16'04"	8 7/16"	2 5/16"
Girder 7	15°27'29"	8 7/16"	2 5/16"
Girder 8	15°39'12"	8 7/16"	2⅜"
Girder 9	15°51'12"	8 7/16"	2⅜"

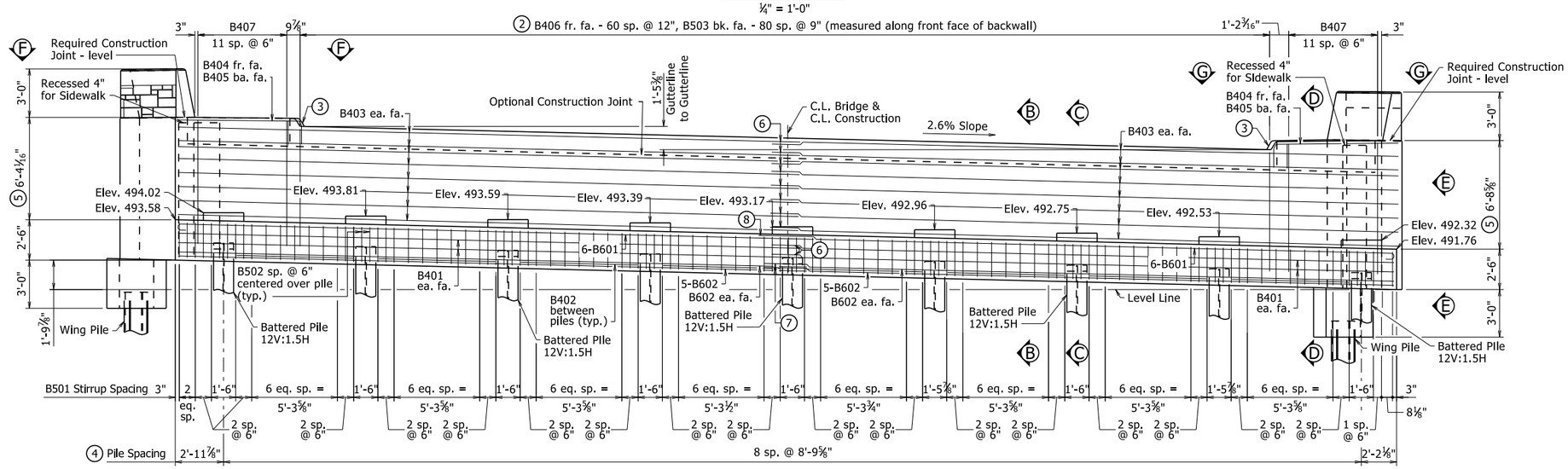

ELEVATION - BENT 1

LOOKING BACK

¼" = 1'-0"

1. Pedestals shall be cast level at the elevations shown in "ELEVATION - BENT 1". See Dwg. No. 66939 for "PEDESTAL PLAN" & "TYPICAL PEDESTAL DETAILS".
2. See Dwg. No. 66939 for "SECTION B-B", "SECTION C-C", "SECTION D-D" & "VIEW E-E", and Dwg. No. 66902 for "VIEW F-F" & "VIEW G-G" for placement of reinforcing.
3. See Dwg. No. 66939 for "SIDEWALK & CURB DETAIL".
4. See Dwg. No. 66902 for "LAYOUT OF PILES".
5. Measured at beginning of wing.
6. 1'-9" minimum lapped splice length
7. 2'-8" minimum lapped splice length
8. 3'-5" minimum lapped splice length

NOTES:

See Dwg. No. 66940 for Wing Views and Sections.

See Dwg. No. 66942 for Three Dimensional View of Wing.

STATE OF ARKANSAS
LICENSED PROFESSIONAL ENGINEER
No. 9235
9/22/23
CHARLES R. ELLIS
BRIDGE ENGINEER

SHEET 1 OF 3
DETAILS OF END BENTS
VACHE GRASSE CREEK (SITE 3)

ROUTE SEC.

ARKANSAS STATE HIGHWAY COMMISSION

LITTLE ROCK, ARK.

DRAWN BY:	CGP	DATE:	09/06/2023	FILENAME:	b040861x3_b1.dgn
CHECKED BY:	WAC	DATE:	09/07/2023	SCALE:	AS NOTED
DESIGNED BY:	PGT	DATE:	09/2023		

BRIDGE NO. 07643 DRAWING NO. 66900

PRINT DATE: 9/22/2023

DATE REVISED	DATE REVISED	FED. RD. DIST. NO.	STATE	JOB NO.	SHEET NO.	TOTAL SHEETS
		6	ARK.	040861	161	291
		07643 - END BENTS - 66901				

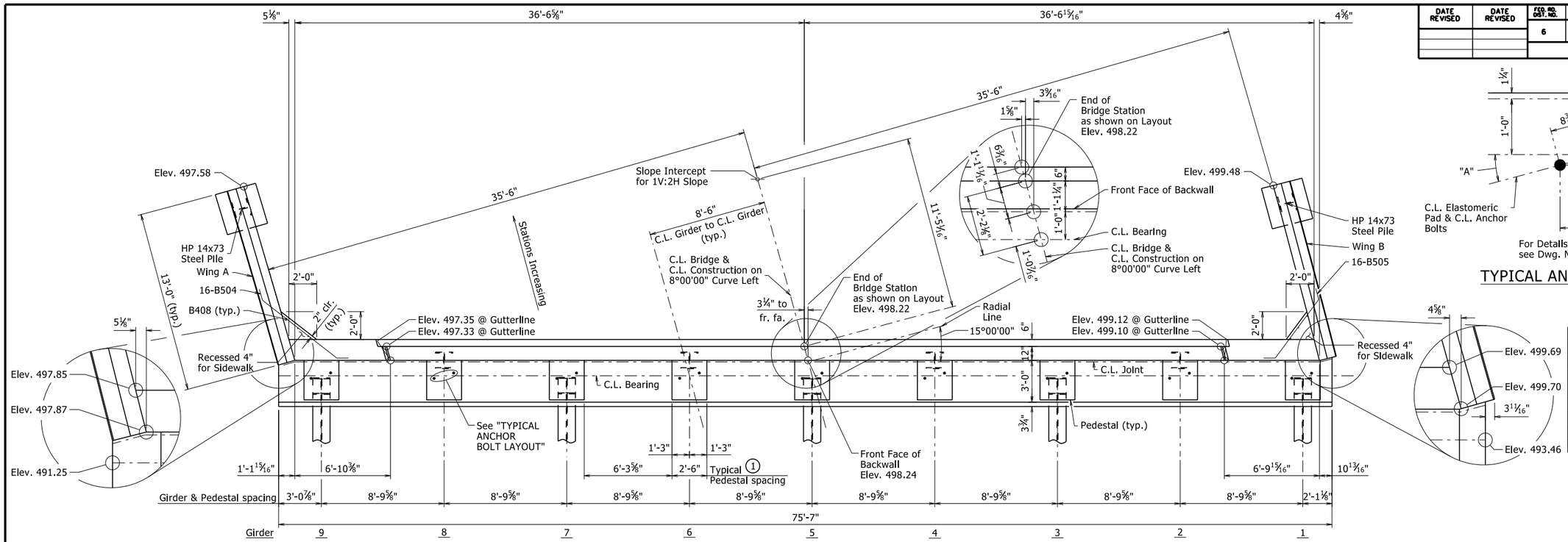

PLAN - BENT 4

¼" = 1'-0"

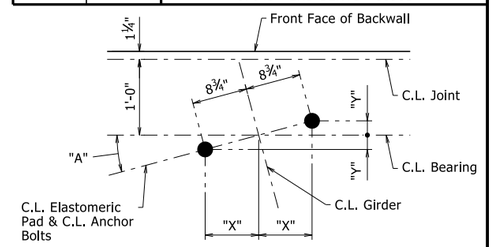

For Details of Elastomeric Bearings, see Dwg. Nos. 66945 & 66946.

TYPICAL ANCHOR BOLT LAYOUT

NO SCALE

	"A"	"X"	"Y"
Girder 1	14°13'36"	8½"	2⅛"
Girder 2	14°23'35"	8½"	2 3/16"
Girder 3	14°33'48"	8½"	2 3/16"
Girder 4	14°44'19"	8 7/16"	2¼"
Girder 5	14°55'02"	8 7/16"	2¼"
Girder 6	15°06'04"	8 7/16"	2 5/16"
Girder 7	15°17'21"	8 7/16"	2 5/16"
Girder 8	15°28'55"	8 7/16"	2 5/16"
Girder 9	15°40'49"	8 7/16"	2⅜"

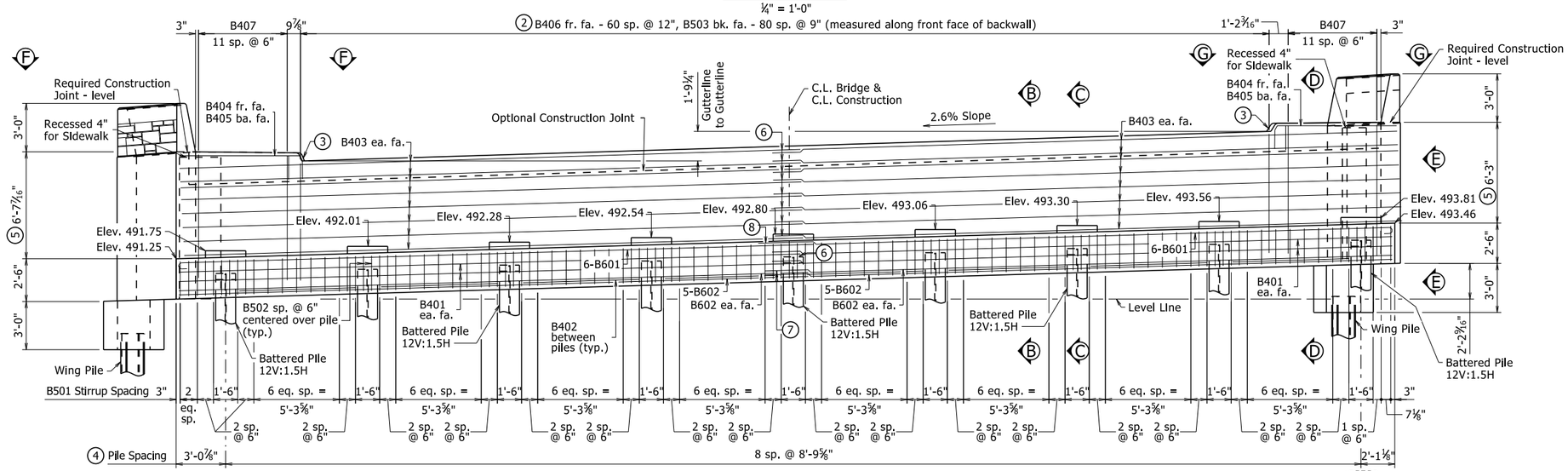

ELEVATION - BENT 4

LOOKING AHEAD

¼" = 1'-0"

① Pedestals shall be cast level at the elevations shown in "ELEVATION - BENT 4". See Dwg. No. 66939 for "PEDESTAL PLAN" & "TYPICAL PEDESTAL DETAILS".

② See Dwg. No. 66939 for "SECTION B-B", "SECTION C-C", "SECTION D-D" & "VIEW E-E", and Dwg. No. 66902 for "VIEW F-F" & "VIEW G-G" for placement of reinforcing.

③ See Dwg. No. 66939 for "SIDEWALK & CURB DETAIL".

④ See Dwg. No. 66902 for "LAYOUT OF PILES".

⑤ Measured at beginning of wing.

⑥ 1'-9" minimum lapped splice length

⑦ 2'-8" minimum lapped splice length

⑧ 3'-5" minimum lapped splice length

NOTES:

See Dwg. No. 66940 for Wing Views and Sections.

See Dwg. No. 66942 for Three Dimensional View of Wing.

STATE OF ARKANSAS
LICENSED PROFESSIONAL ENGINEER
No. 9235
9/22/23
CHARLES R. ELLIS
BRIDGE ENGINEER

SHEET 2 OF 3
DETAILS OF END BENTS
VACHE GRASSE CREEK (SITE 3)

ROUTE SEC.

ARKANSAS STATE HIGHWAY COMMISSION

LITTLE ROCK, ARK.

DRAWN BY: CGP DATE: 09/06/2023 FILENAME: b040861x3_b1.dgn
CHECKED BY: WAC DATE: 09/07/2023 SCALE: AS NOTED
DESIGNED BY: PGT DATE: 09/2023

BRIDGE NO. 07643 DRAWING NO. 66901

PRINT DATE: 9/22/2023

DATE REVISED	DATE REVISED	FED. RD. DIST. NO.	STATE	JOB NO.	SHEET NO.	TOTAL SHEETS
		6	ARK.	040861	162	291
		07643 - END BENTS - 66902				

BAR LIST

MARK	BENT 1 NO. REQ'D	BENT 1 LENGTH	BENT 1 "A"	BENT 4 NO. REQ'D	BENT 4 LENGTH	BENT 4 "A"	P.D.
B401	4	38'-6"		4	38'-6"		Str.
B402	7	7'-3"		7	7'-3"		Str.
B403	32	38'-8"		32	38'-8"		2"
B404	2	9'-1"		2	9'-1"		2"
B405	2	8'-5"		2	8'-5"		2"
B406	61	8'-11"		61	8'-11"		2"
B407	24	15'-4"		24	15'-4"		2"
B408	6	7'-7"		6	7'-7"		Str.
B409	8	3'-2"		8	3'-2"		2"
B410	2	5'-4"		2	5'-4"		2"
B411	2	5'-6"		2	5'-6"		2"
B412	36	5'-3"		36	5'-3"		2"
B413	36	5'-7"		36	5'-7"		2"
B414	17	9'-8"		17	9'-8"		2"
B501	96	13'-4"		96	13'-4"		2½"
B502	18	8'-5"		18	8'-5"		2½"
B503	81	5'-8"		81	5'-8"		Str.
B504	16	8'-4"	6'-8"	16	8'-5"	6'-9"	3¾"
B505	16	6'-10"	5'-2"	16	6'-11"	5'-3"	3¾"
B601	12	40'-0"		12	40'-0"		4½"
B602	14	39'-0"		14	39'-0"		Str.
F601	12	2'-8"		12	2'-8"		Str.
F602	24	11'-5"		24	11'-5"		4½"
R401E	52	6'-4"		52	6'-4"		(1)
R402E	16	12'-8"		16	12'-8"		Str.
W401E	52	3'-11"		52	3'-11"		(1)
W402	40	(3)		40	(3)		2"
W701	68	12'-8"		68	12'-8"		Str.

BENDING DIAGRAMS

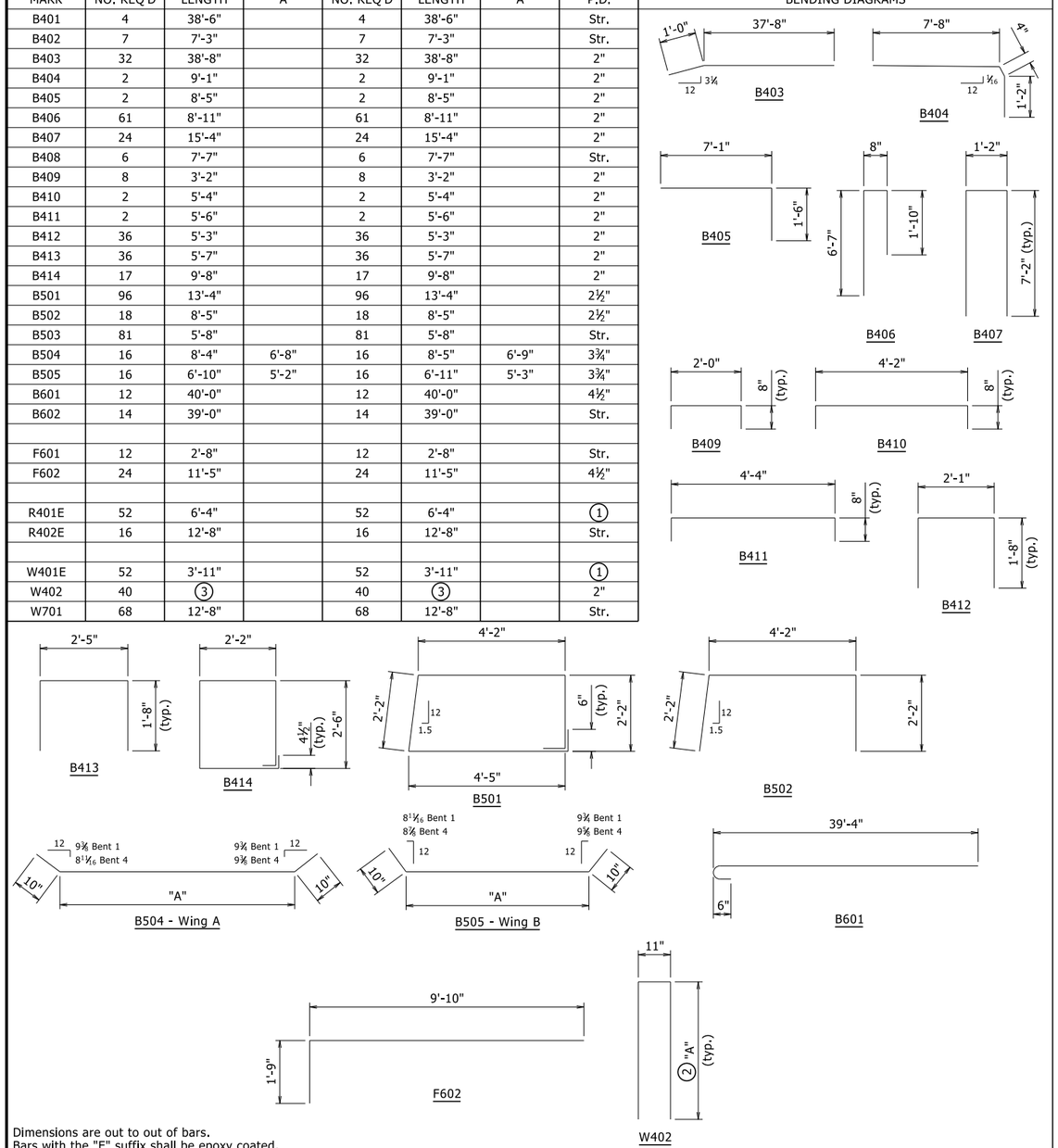

Dimensions are out to out of bars.
Bars with the "E" suffix shall be epoxy coated.

(1) See Std. Dwg. No. 55070 for details of rail reinforcing and location of bars with an "R" prefix & W401E.

(2) Bent 1 Wing A - 8'-6"
Bent 1 WIng B - 8'-10½"
Bent 4 Wing A - 8'-8½"
Bent 4 Wing B - 8'-4"

(3) Bent 1 Wing A - 17'-9"
Bent 1 Wing B - 18'-6"
Bent 4 Wing A - 18'-2"
Bent 4 Wing B - 17'-5"

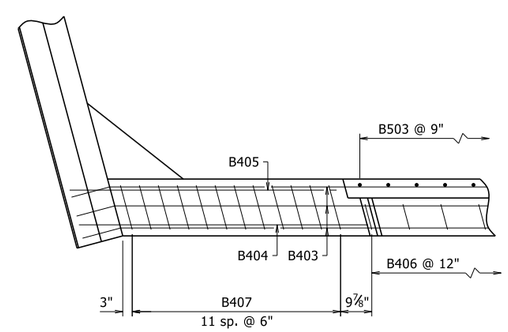

VIEW F-F
½" = 1'-0"

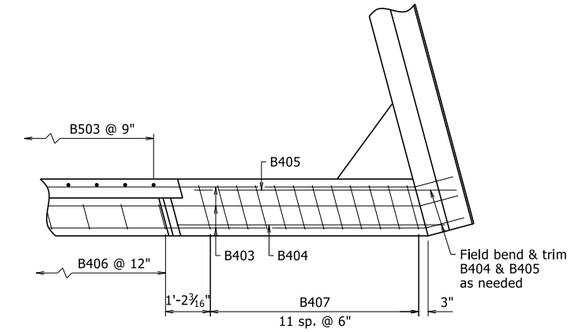

VIEW G-G
½" = 1'-0"

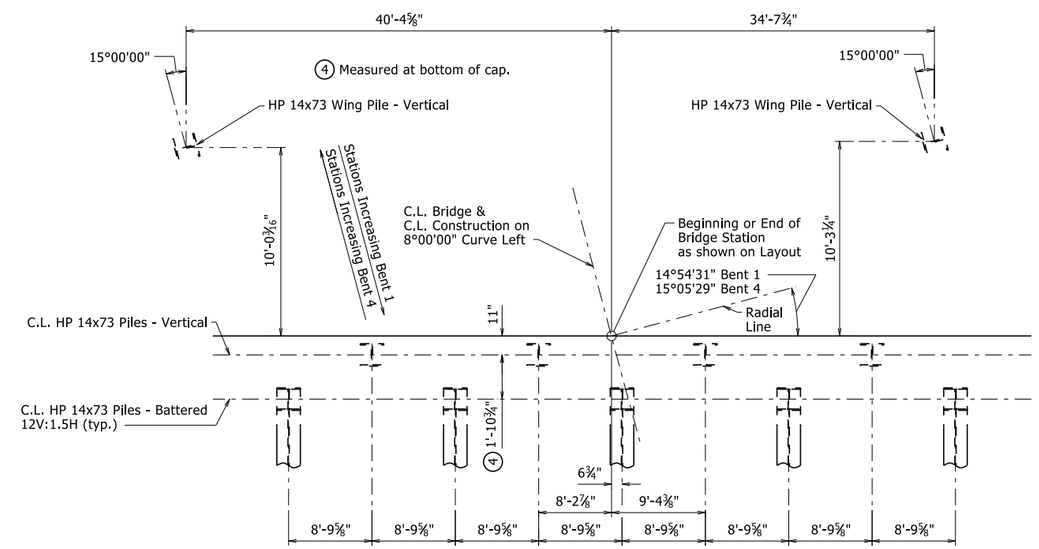

LAYOUT OF PILES
NO SCALE

STATE OF ARKANSAS
LICENSED PROFESSIONAL ENGINEER
No. 9235
9/22/23
CHARLES R. ELLIS

BRIDGE ENGINEER

SHEET 3 OF 3
DETAILS OF END BENTS
VACHE GRASSE CREEK (SITE 3)

ROUTE SEC.
ARKANSAS STATE HIGHWAY COMMISSION
LITTLE ROCK, ARK.

DRAWN BY: CGP DATE: 09/06/2023
CHECKED BY: WAC DATE: 09/07/2023
DESIGNED BY: PGT DATE: 09/2023
FILENAME: b040861x3_b1.dgn
SCALE: AS NOTED

BRIDGE NO. 07643 DRAWING NO. 66902

PRINT DATE: 9/22/2023

DATE REVISED	DATE REVISED	FED. RD. DIST. NO.	STATE	JOB NO.	SHEET NO.	TOTAL SHEETS
		6	ARK.	040861	163	291
		07643 - INTERMEDIATE BENTS - 66903				

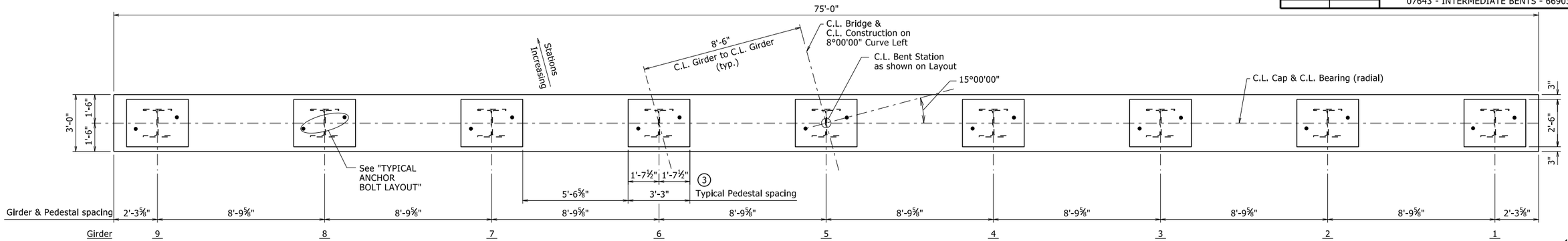

PLAN

⅜" = 1'-0"

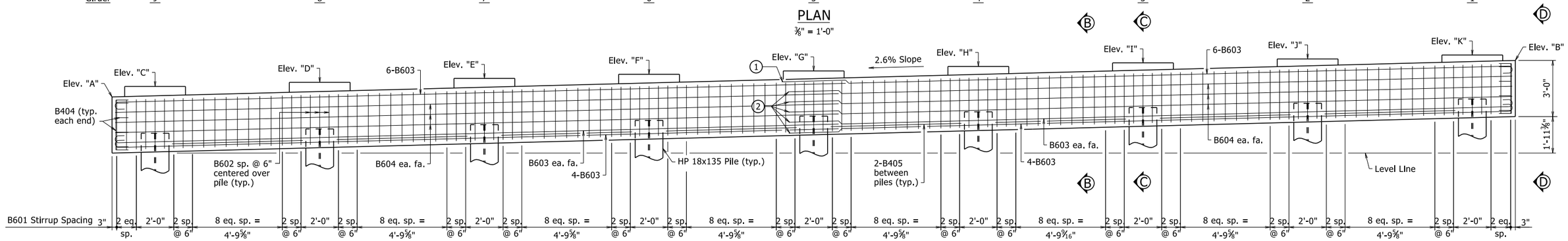

ELEVATION

LOOKING AHEAD

⅜" = 1'-0"

	Elev. "A"	Elev. "B"	Elev. "C"	Elev. "D"	Elev. "E"	Elev. "F"	Elev. "G"	Elev. "H"	Elev. "I"	Elev. "J"	Elev. "K"
Bent 2	492.08	494.03	492.64	492.86	493.07	493.29	493.47	493.71	493.90	494.11	494.32
Bent 3	492.22	494.17	492.78	493.01	493.24	493.47	493.68	493.93	494.13	494.35	494.58

NOTES:

See Dwg. No. 66943 for "SECTION A-A", "SECTION B-B", "SECTION C-C", & "VIEW D-D".

① 3'-5" minimum lapped splice length

② 2'-8" minimum lapped splice length

③ Pedestals shall be cast level at the elevations shown in "ELEVATION". See Dwg. No. 66943 for "PEDESTAL PLAN" & "TYPICAL PEDESTAL DETAILS".

BAR LIST-PER BENT

MARK	NO. REQ'D	LENGTH	P.D.
B401	36	6'-1"	2"
B402	45	5'-4"	2"
B403	9	10'-6"	2"
B404	16	3'-10"	2"
B405	16	7'-0"	Str.
B601	110	11'-10"	4½"
B602	27	7'-8"	4½"
B603	24	39'-9"	4½"
B604	12	38'-8"	Str.

BENDING DIAGRAMS

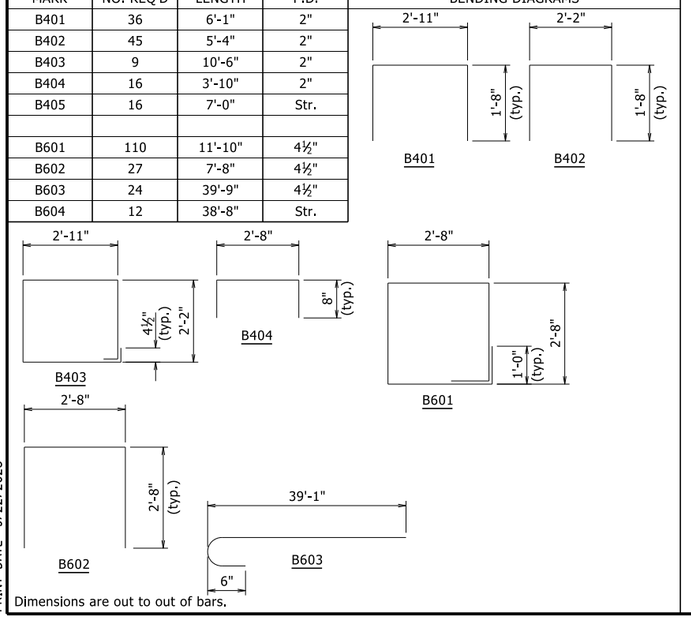

Dimensions are out to out of bars.

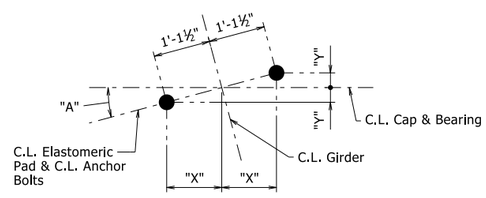

For Details of Elastomeric Bearings, see Dwg. Nos. 66945 & 66946.

TYPICAL ANCHOR BOLT LAYOUT

NO SCALE

		"A"	"X"	"Y"
Bent 2 & Bent 3	Girder 1	14°18'20"	1'-1 1/16"	3⅜"
	Girder 2	14°28'22"	1'-1 1/16"	3 7/16"
	Girder 3	14°38'38"	1'-1 1/16"	3½"
	Girder 4	14°49'12"	1'-1 1/16"	3½"
	Girder 5	15°00'00"	1'-1 1/16"	3 9/16"
	Girder 6	15°11'05"	1'-1"	3⅝"
	Girder 7	15°22'25"	1'-1"	3⅝"
	Girder 8	15°34'05"	1'-1"	3 11/16"
	Girder 9	15°45'59"	1'-1"	3¾"

STATE OF ARKANSAS
LICENSED PROFESSIONAL ENGINEER
No. 9235
9/22/23
CHARLES R. ELLIS

BRIDGE ENGINEER

DETAILS OF INTERMEDIATE BENTS
VACHE GRASSE CREEK (SITE 3)

ROUTE SEC.

ARKANSAS STATE HIGHWAY COMMISSION

LITTLE ROCK, ARK.

DRAWN BY: CGP DATE: 09/06/2023
CHECKED BY: NAC DATE: 09/07/2023
DESIGNED BY: PGT DATE: 09/2023
FILENAME: b040861x3_b2.dgn
SCALE: AS NOTED

BRIDGE NO. 07643 DRAWING NO. 66903

PRINT DATE: 9/22/2023

DATE REVISED	DATE REVISED	FED. RD. DIST. NO.	STATE	JOB NO.	SHEET NO.	TOTAL SHEETS
		6	ARK.	040861	164	291
		07463		- 273'-0" UNIT -		66904

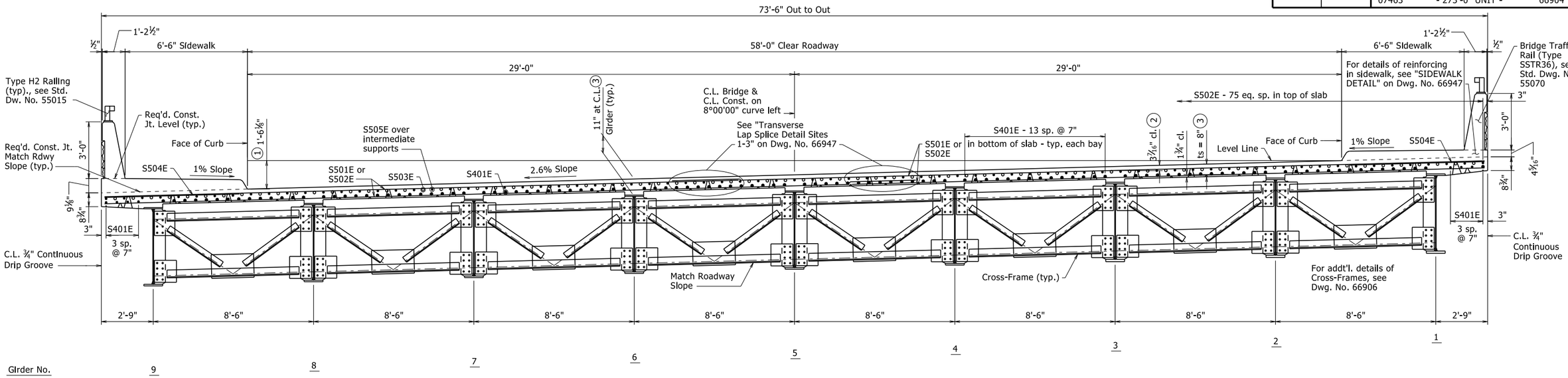

TYPICAL ROADWAY SECTION

Looking Ahead
⅜" = 1'-0"

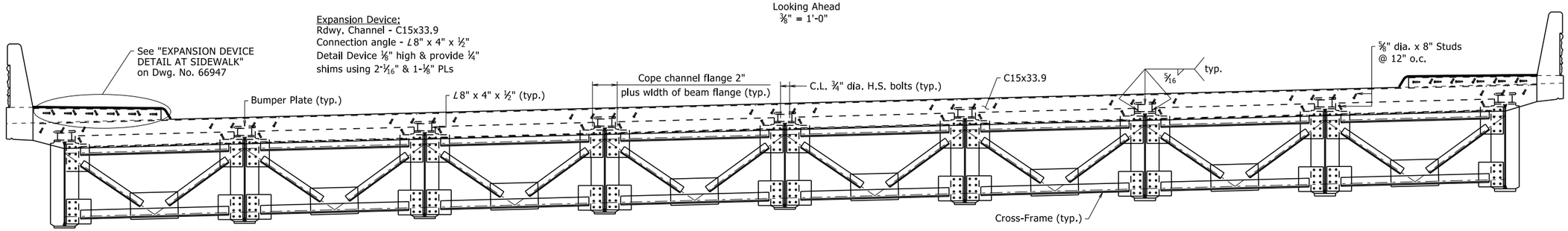

For additional details of poured silicone joint, see Std. Dwg. No. 55008

TYPICAL ROADWAY SECTION AT JOINT

Looking Ahead
⅜" = 1'-0"

Sidewalk Reinforcing:

Longitudinal: K401E in top as shown

Transverse: K402E & K403E @ 12" o.c. or
K404E @ beg. bridge
K405E @ end bridge

Slab Reinforcing:

Longitudinal: S401E in Bottom and S503E in Top (placed as shown)
S505E Addt'l Top over Interior Support, see "Reinforcing Plan" on Dwg. No. 66908.
Transverse: S501E & S502E @ 6" o.c. in top & bottom
S504E @ 6" o.c. in top of overhangs (bundled with #5 bars)
S506E @ beg. bridge or S509E @ end bridge

All horizontal dimensions shown are measured along a line radial to C.L. Constuction.

Bar positions or clearances from the forms shall be maintained by means of stays, ties, hangers, or other approved devices per Subsection 804.06. Placement of slab bolsters or high chairs with full-length lower runners directly on removable deck forms will not be allowed.

Class 2 Protective Surface Treatment shall be applied to the Roadway Surface, Sidewalk Surface (including curbing), and the Roadway Face and Top of Concrete Bridge Rail in accordance with Section 803.

Class 3 Textured Coating Finish shall be applied to bridge surfaces as specified in Special Provision "Textured Coating Finish" and in accordance with Subsection 802.19(b)(3).

1. Vertical Distance at Top of Deck from Left to Right Gutterline.
2. Tolerance: Minus = ¼";
   Plus = Equal to amount of slab thickening used to meet slab thickness tolerance. See "ADJUSTMENT FOR SLAB THICKNESS" on Std. Dwg. No. 55070.
3. See "ADJUSTMENT FOR SLAB THICKNESS" on Std. Dwg. No. 55070.

STATE OF ARKANSAS
LICENSED PROFESSIONAL ENGINEER
No. 9235
9/22/23
CHARLES R. ELLIS

9/22/2023 9:20 AM

BRIDGE ENGINEER

SHEET 1 OF 6
DETAILS OF 273'-0"
CONTINUOUS PLATE GIRDER UNIT
VACHE GRASSE CREEK (SITE 3)

ROUTE SEC.

ARKANSAS STATE HIGHWAY COMMISSION

LITTLE ROCK, ARK.

DRAWN BY:	CTM	DATE:	6/27/2023	FILENAME:	b040861x3_s1.dgn
CHECKED BY:	DBS	DATE:	8/25/23	SCALE:	As Shown
DESIGNED BY:	CTM	DATE:	6/2023		

BRIDGE NO. 07463 DRAWING NO. 66904

PRINT DATE: 9/22/2023

DATE REVISED	DATE REVISED	FED. RD. DIST. NO.	STATE	JOB NO.	SHEET NO.	TOTAL SHEETS
		6	ARK.	040861	165	291
		07463		- 273'-0" UNIT -	66905	

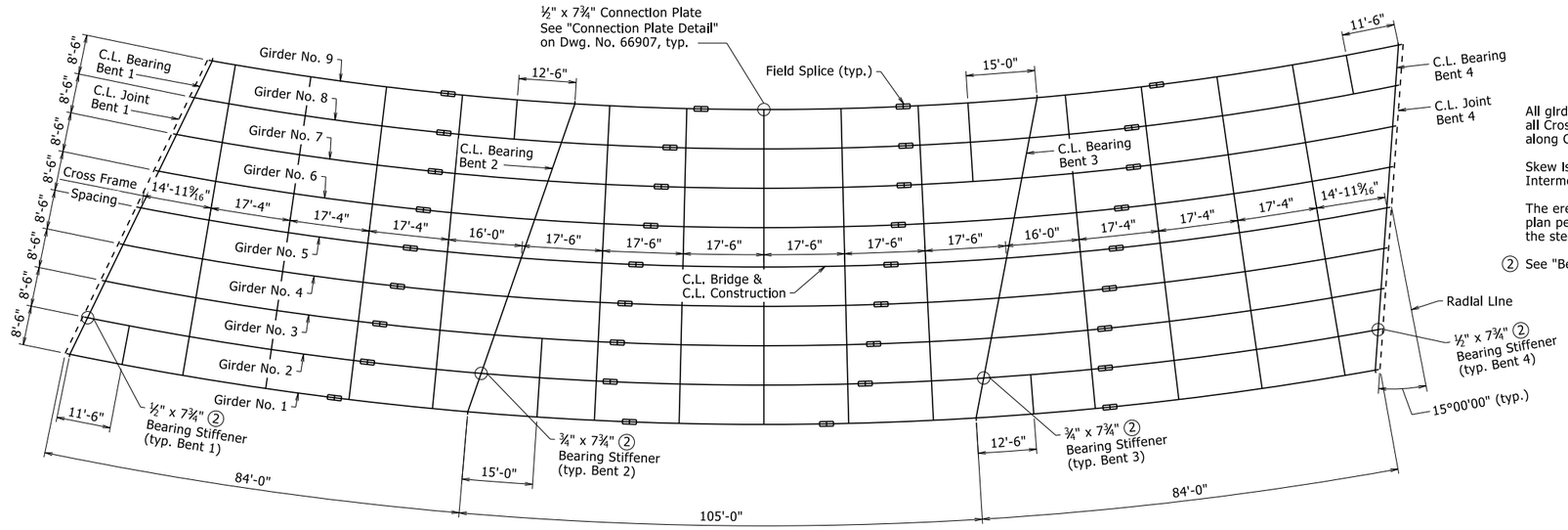

All girders are placed concentric to C.L. Const. Unless noted otherwise, all Cross-Frames are placed on radial lines and spacing is measured along C.L. Const. Cross-Frames at Bents are skewed along C.L. Bearing.

Skew is measured at C.L. Joint for End Bents and at C.L. Bent for Intermediate Bents.

The erection of the structural steel shall be performed according to a plan permitting the steel to be erected plumb with bolts tightened while the steel is as close as possible to the steel dead load condition.

② See "Bearing Stiffener Detail" on Dwg. No. 66907.

FRAMING PLAN

1/16" = 1'-0"

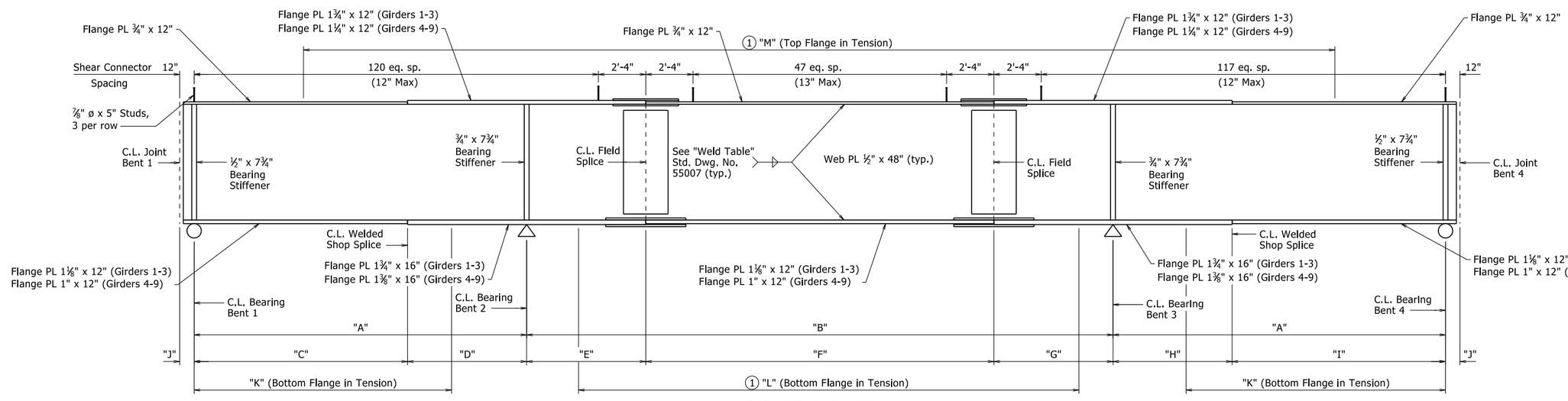

For details of bolted field splices, bearing stiffeners, and connection plates, see Dwg. No. 66907.

All Structural Steel shall be ASTM A709 Gr. 50W unless otherwise noted and shall be paid for as "Structural Steel in Plate Girder Spans (ASTM A709 Gr. 50W). See Standard Dwg. Nos. 55006 and 55007 for additional notes and details.

For "DETAILS OF WELDED SPLICES FOR PLATE GIRDERS", "SHEAR CONNNECTOR DETAIL", AND "SCREED RAIL SUPPORT FOR PLATE GIRDERS", see Std. Dwg. No. 55007.

GIRDER ELEVATION

No Scale

① Centered at midpoint of span

TABLE OF VARIABLES

Girder No.	"A"	"B"	"C"	"D"	"E"	"F"	"G"	"H"	"I"	"J"	"K"	"L"	"M"
Girder 1	86'-11 7/16"	109'-11 13/16"	57'-11⅝"	28'-11⅞"	35'-0⅛"	42'-7 7/16"	32'-4¼"	29'-0 9/16"	57'-11⅛"	1'-0⅜"	73'-0"	79'-0"	211'-0"
Girder 2	85'- 11½"	108'-8⅞"	61'-3⅛"	24'-8⅜"	27'-11⅜"	55'-1 13/16"	25'-7 11/16"	26'-4¾"	59'-6¾"	1'-0⅜"	73'-0"	79'-0"	195'-0"
Girder 3	84'-11½"	107'-5 15/16"	60'-0 9/16"	24'-10 15/16"	26'-7¼"	55'-5 1/16"	25'-5⅝"	24'-7½"	60'-4 1/16"	1'-0⅜"	71'-0"	77'-0"	192'-0"
Girder 4	83'-11 9/16"	106'-2 15/16"	59'-11 15/16"	23'-11⅝"	25'-4½"	55'-4 5/16"	25'-6 3/16"	23'-11 13/16"	59'-11 11/16"	1'-0 7/16"	72'-0"	81'-0"	184'-0"
Girder 5	82'-11 3/16"	105'-0"	58'-10¾"	24'-0 13/16"	24'-9 15/16"	55'-1 13/16"	25'-0¼"	23'-9⅜"	59'-2"	1'-0 7/16"	71'-0"	81'-0"	181'-0"
Girder 6	81'-11⅝"	103'-9 1/16"	57'-9⅞"	24'-1 11/16"	25'-1⅝"	53'-6½"	25'-0 15/16"	23'-3⅞"	58'-7¾"	1'-0 7/16"	69'-0"	78'-0"	179'-0"
Girder 7	80'-11⅝"	102'-6 1/16"	56'-6 1/16"	24'-5 3/16"	24'-6 3/16"	52'-6⅛"	25'-5 13/16"	24'-3 1/16"	56'-8½"	1'-0 7/16"	69'-0"	78'-0"	180'-0"
Girder 8	79'-11⅝"	101'-3⅛"	54'-5 9/16"	25'-6⅛"	23'-5⅞"	51'-0"	26'-9¼"	22'-2¾"	57'-8⅞"	1'-0 7/16"	68'-0"	77'-0"	179'-0"
Girder 9	78'-11 11/16"	100'-0 3/16"	51'-5½"	27'-6⅛"	27'-3 7/16"	43'-8⅜"	29'-0 9/16"	25'-11 11/16"	53'-0"	1'-0½"	66'-0"	73'-0"	179'-0"

STATE OF ARKANSAS
LICENSED PROFESSIONAL ENGINEER
No. 9235
9/22/23
CHARLES R. ELLIS
Charles R. Ellis
Digitally signed by Charles R. Ellis
Date: 2023.09.22 11:20:11 -05'00'
BRIDGE ENGINEER

SHEET 2 OF 6
DETAILS OF 273'-0"
CONTINUOUS PLATE GIRDER UNIT
VACHE GRASSE CREEK (SITE 3)

ROUTE SEC.

ARKANSAS STATE HIGHWAY COMMISSION

LITTLE ROCK, ARK.

DRAWN BY: CTM DATE: 6/27/2023 FILENAME: b040861x3_s1.dgn
CHECKED BY: DBS DATE: 8/25/23 SCALE: As Shown
DESIGNED BY: CTM DATE: 6/2023

BRIDGE NO. 07463 DRAWING NO. 66905

PRINT DATE: 9/22/2023

DATE REVISED	DATE REVISED	FED. RD. DIST. NO.	STATE	JOB NO.	SHEET NO.	TOTAL SHEETS
		6	ARK.	040861	166	291
		07463		- 273'-0" UNIT -		66906

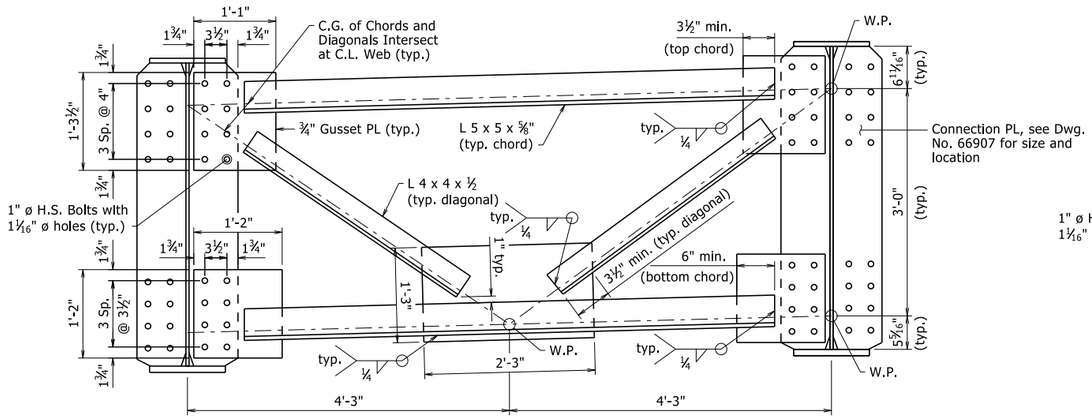

DETAILS OF CROSS-FRAMES AT CONNECTION PLATES

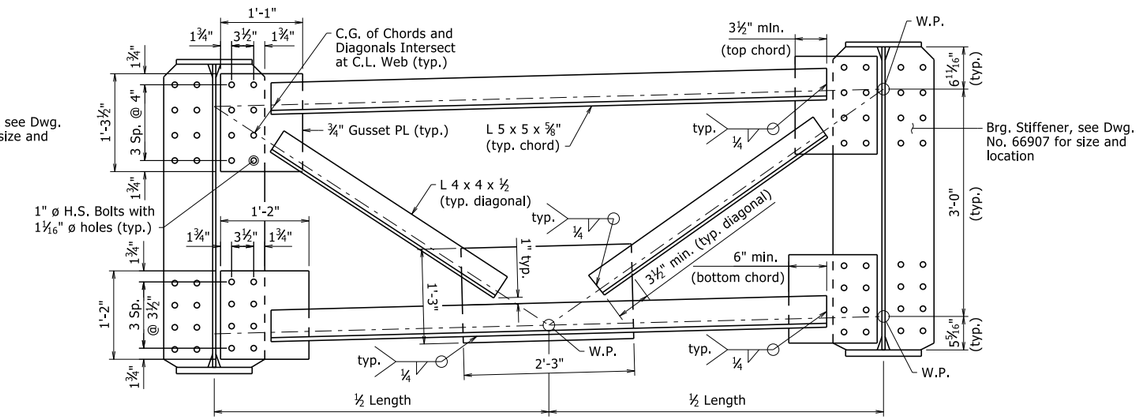

DETAILS OF CROSS-FRAMES AT BENTS

BAR LIST

Slab and Sidewalk				Railing			
MARK	NO. REQ'D.	LENGTH	P.D.	MARK	NO. REQ'D.	LENGTH	P.D.
S401E	840	41'-1"	Str.	(1) R401E	1214	6'-4"	2½", 3"
S501E	1010	43'-1"	Str.	(1) R402E	32	5'-6"	Str.
S502E	1032	33'-9"	Str.	(1) R403E	1214	4'-3"	3", 3¾"
S503E	462	48'-6"	Str.	(1) R404E	32	12'-8"	Str.
S504E	1087	7'-2"	Str.	(1) R405E	24	20'-8"	Str.
S505E	456	27'-9"	Str.	(1) R406E	16	12'-1"	Str.
S506E	12	7'-5"	Str.	(1) R407E	16	12'-1"	Str.
S507E	2	41'-6"	Str.	(1) R408E	24	19'-9"	Str.
S508E	2	37'-11	Str.	(1) R409E	16	12'-1"	Str.
S509E	12	7'-5"	Str.	(1) R410E	16	12'-1"	Str.
S511E-S541E	31	6'-11"-60'-0"	Str.	(1) R411E	24	20'-8"	Str.
S542E-S545E	8	24'-7"-30'-5"	Str.	(1) R412E	24	17'-10"	Str.
S546E-S548E	6	22'-10"-32'-2"	Str.	(1) R413E	16	12'-2"	Str.
S549E-S551E	6	30'-2"-21'-7"	Str.	(1) R414E	16	12'-2"	Str.
S552E-S554E	6	32'-4"-23'-8"	Str.	(1) R415E	24	16'-2"	Str.
S555E-S582E	28	6'-5"-58'-11"	Str.	(1) R416E	16	12'-2"	Str.
K401E	112	43'-5"	Str.	(1) R417E	16	12'-2"	Str.
K402E	542	5'-6"	3"	(1) R418E	24	17'-10"	Str.
K403E	542	7'-2"	Str.	Bars designated with an "E" suffix are epoxy coated.			
K404E	2	7'-5"	Str.				
K405E	3	7'-5"	Str.	(1) See Std. Dwg. No. 55070 for additional details.			

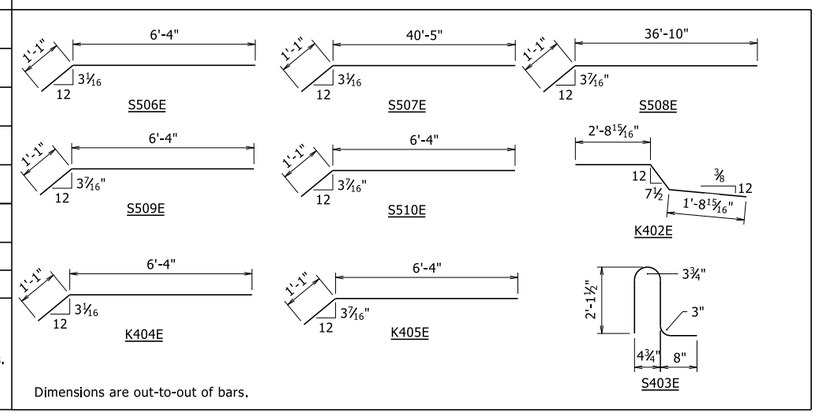

Dimensions are out-to-out of bars.

TABLE OF VARIABLES
BRIDGE TRAFFIC RAILING (TYPE SSTR36)

Panel Length	Panel Type	R4XXE	A
21'-0⅞"	Closed	R405E	42
12'-5 11/16"	Closed	R406E	24
12'-5 7/16"	Closed	R407E	24
20'-1½"	Closed	R408E	40
12'-5 9/16"	Closed	R409E	24
12'-5½"	Closed	R410E	24
21'-1"	Closed	R411E	42
18'-2 15/16"	Closed	R412E	36
12'-6⅝"	Closed	R413E	25
12'-6 11/16"	Closed	R414E	25
16'-6 7/16"	Closed	R415E	33
12'-6½"	Closed	R416E	25
12'-6¾"	Closed	R417E	25
18'-2⅞"	Closed	R418E	36

STATE OF ARKANSAS
LICENSED PROFESSIONAL ENGINEER
No. 9235
9/22/23
CHARLES R. ELLIS
BRIDGE ENGINEER

SHEET 3 OF 6
DETAILS OF 273'-0"
CONTINUOUS PLATE GIRDER UNIT
VACHE GRASSE CREEK (SITE 3)

ROUTE SEC.

ARKANSAS STATE HIGHWAY COMMISSION

LITTLE ROCK, ARK.

DRAWN BY: CTM DATE: 6/27/2023 FILENAME: b040861x3_s1.dgn
CHECKED BY: DBS DATE: 8/25/23 SCALE: 1"= 1'-0"
DESIGNED BY: CTM DATE: 6/2023

BRIDGE NO. 07463 DRAWING NO. 66906

PRINT DATE: 9/22/2023

DATE REVISED	DATE REVISED	FED. RD. DIST. NO.	STATE	JOB NO.	SHEET NO.	TOTAL SHEETS
		6	ARK.	040861	167	291
		07463		- 273'-0" UNIT -		66907

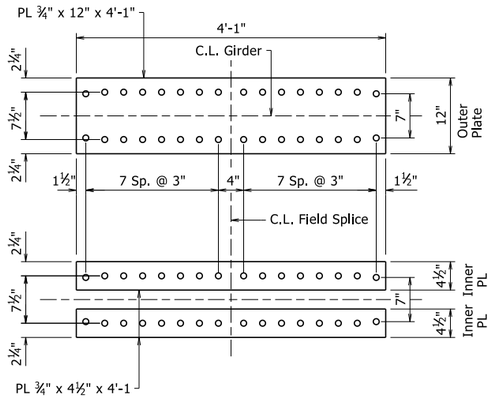

TOP FLANGE SPLICE GIRDERS 1-3

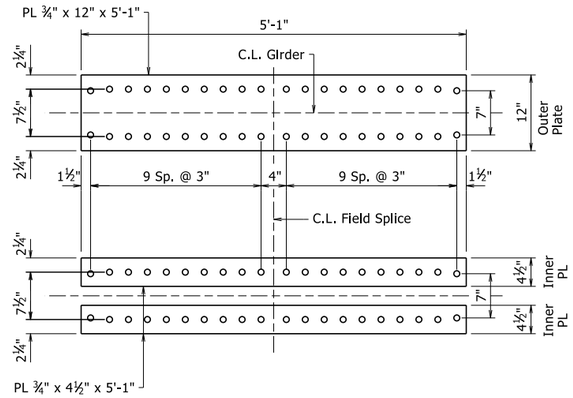

BOTTOM FLANGE SPLICE GIRDERS 1-3

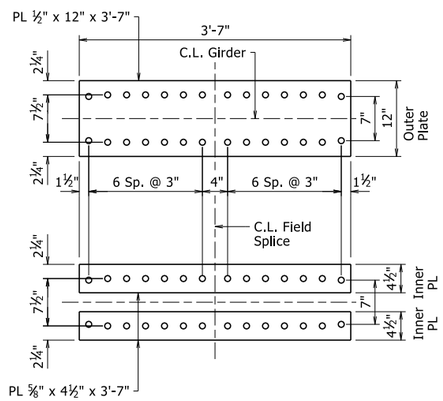

TOP FLANGE SPLICE GIRDERS 4-9

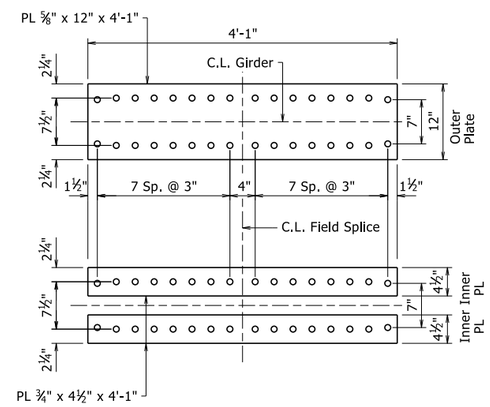

BOTTOM FLANGE SPLICE GIRDERS 4-9

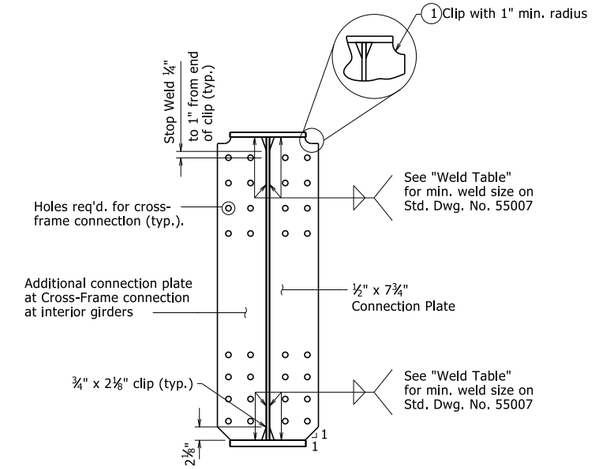

CONNECTION PLATE DETAIL

1 If permanent steel bridge deck forms are used, the Fabricator shall clip plates as necessary to accommodate the deck form supports.

NOTE: All Bearing Stiffeners shall be vertical in final position.

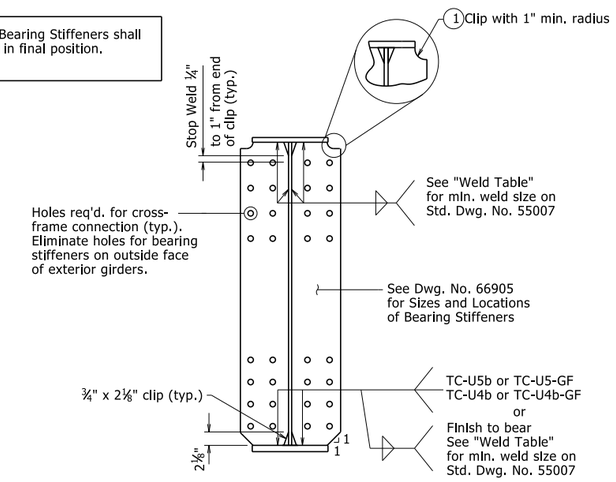

BEARING STIFFENER DETAIL

Bents 1 & 4 Shown, Bents 2 & 3 Similar

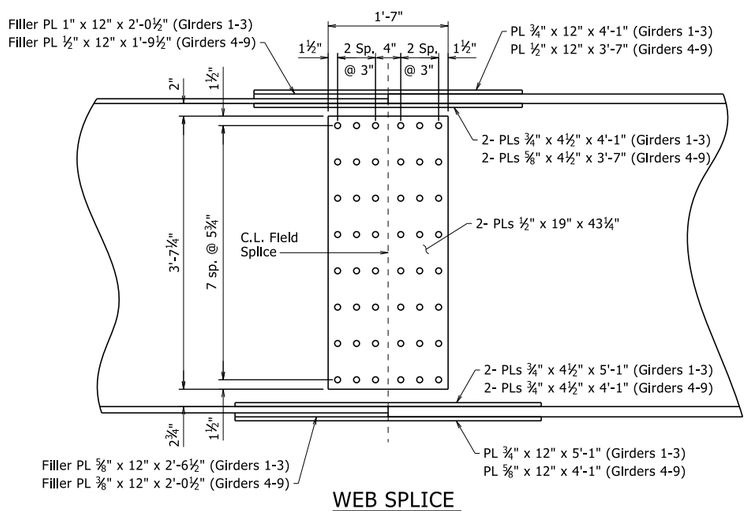

WEB SPLICE

FIELD SPLICE DETAILS

Bolted field splice may be eliminated or shop weld splices may be substituted with the approval of the Engineer. Payment will be made on the basis of plan quantities.

All field splice bolts shall be ⅞" ø Hi-Str. bolts.

All holes for splice bolts $\frac{15}{16}$" ø.

All field splice plates shall be ASTM A709 Gr. 50W.

STATE OF ARKANSAS
LICENSED PROFESSIONAL ENGINEER
No. 9235
9/22/23
CHARLES R. ELLIS

BRIDGE ENGINEER

SHEET 4 OF 6
DETAILS OF 273'-0"
CONTINUOUS PLATE GIRDER UNIT
VACHE GRASSE CREEK (SITE 3)

ROUTE SEC.

ARKANSAS STATE HIGHWAY COMMISSION

LITTLE ROCK, ARK.

DRAWN BY:	CTM	DATE:	6/27/2023	FILENAME:	b040861x3_s1.dgn
CHECKED BY:	DBS	DATE:	8/25/23	SCALE:	1" = 1'-0"
DESIGNED BY:	CTM	DATE:	6/2023		

BRIDGE NO. 07463 DRAWING NO. 66907

PRINT DATE: 9/22/2023

DATE REVISED	DATE REVISED	FED. RD. DIST. NO.	STATE	JOB NO.	SHEET NO.	TOTAL SHEETS
		6	ARK.	040861	168	291
		07463	- 273'-0" UNIT -			66908

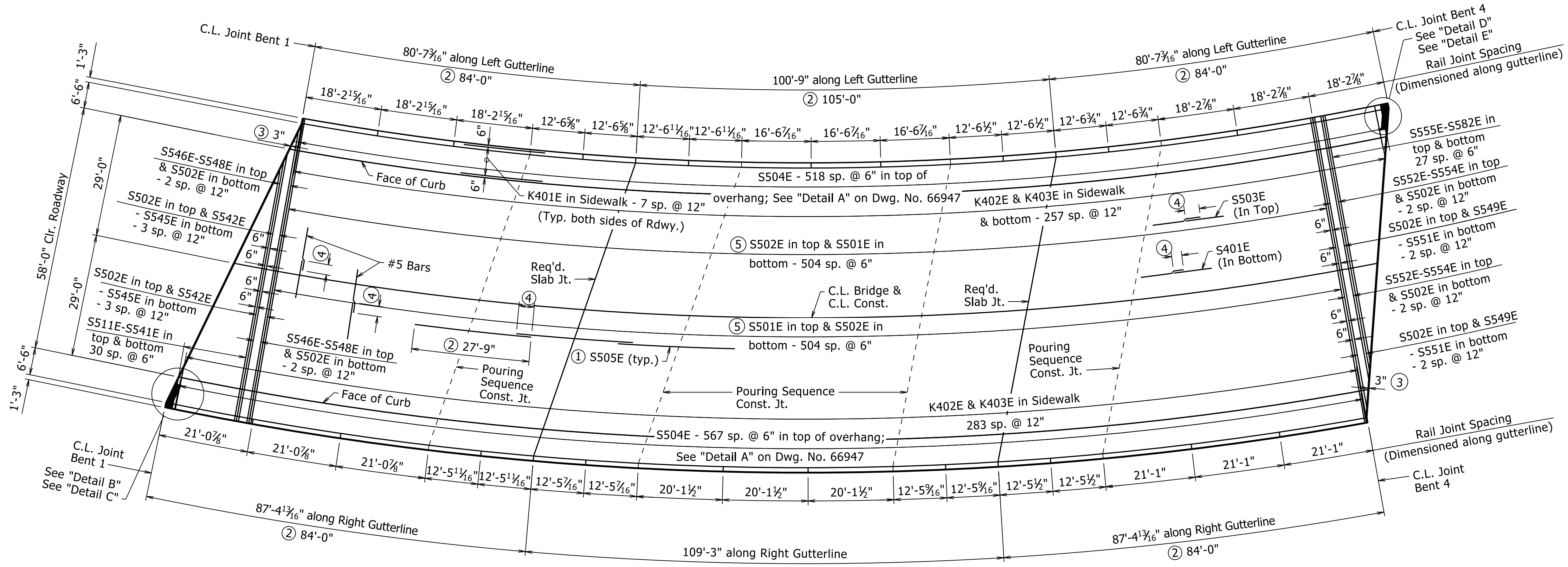

REINFORCING PLAN

1⁄16" = 1'-0"

POURING SEQUENCE NOTES

Pours with the same number may be placed simultaneously or separately. All pours (1) must be placed before pours (2) can be placed. A minimum of 48 hours shall elapse between the end of a pour and the start of the next pour. A minimum of 72 hours shall elapse between the end of a pour and the start of an adjacent pour. A minimum of 72 hours shall elapse between completion of the slab and the pouring of the sidewalk. A minimum of 72 hours shall elapse between completion of the sidewalk and pouring of the bridge rail. Any railing or sidewalk pours made before the entire slab unit has been placed must be approved by the Engineer. The Contractor must obtain approval from the Engineer for any deviations from the pouring sequence shown.

Concrete shall be placed, consolidated, and screeded off for the entire pour before any concrete has taken its initial set. This may require the use of a retarding agent.

Required slab joints and pouring sequence construction joints shall align with open joints at the front face of the rail.

① Placed as shown in "TYPICAL ROADWAY SECTION," Dwg. No. 66904

② Measured Along C.L. Construction

③ Measured to C.L. Joint

④ Minimum Lap for Bars:
2'-5" - #4 Bars
3'-7" - #5 Bars

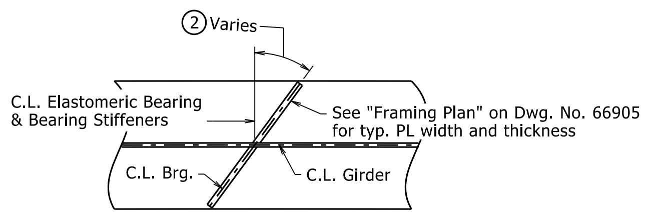

INTERIOR GIRDERS

② See Dwg. Nos. 66898 & 66905.

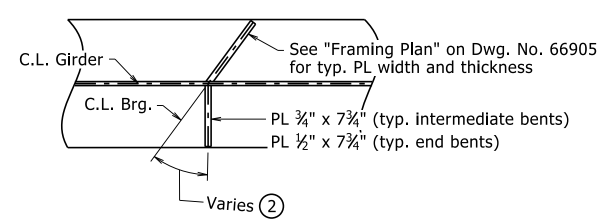

EXTERIOR GIRDERS

(Girder 1 shown, Girder 9 similar)

TYPICAL BEARING STIFFENERS

No Scale

C.L. Bridge is in a 8°00'00" Horizontal Curve to the Left. All longitudinal lines and longitudinal reinforcing steel shall be placed on curves concentric with C.L. Bridge. All transverse reinforcing steel shall be placed on radial lines and shall be measured along C.L. Bridge. Unless noted otherwise, all longitudinal dimensions are along C.L. Bridge & C.L. Construction.

See Dwg. No. 66906 for Bar List.

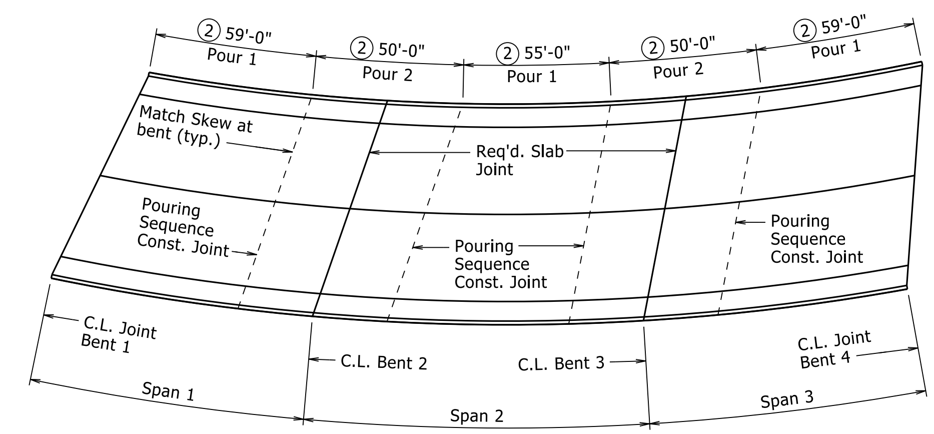

SLAB POURING SEQUENCE

1⁄32" = 1'-0"

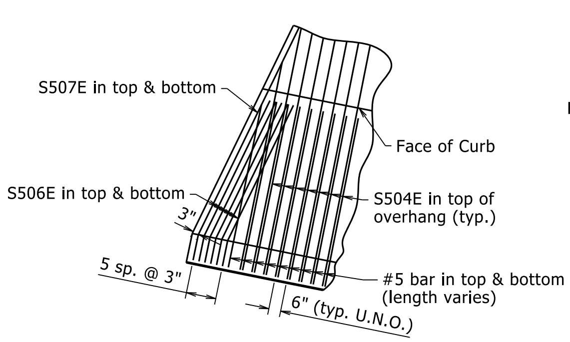

DETAIL B

¼"= 1'-0"

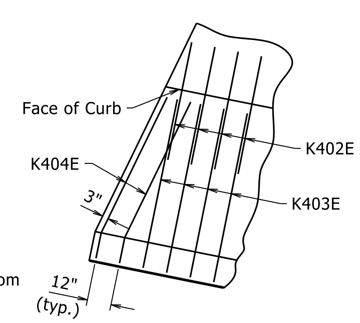

DETAIL C

¼"= 1'-0"

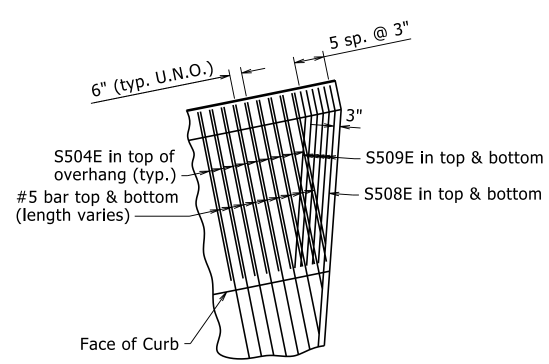

DETAIL D

¼"= 1'-0"

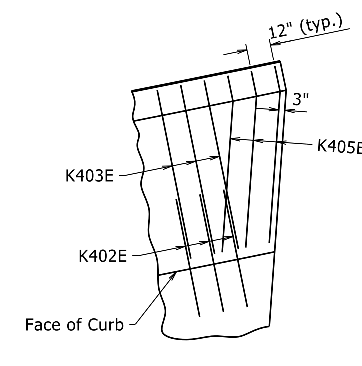

DETAIL E

¼"= 1'-0"

STATE OF ARKANSAS LICENSED PROFESSIONAL ENGINEER No. 9235 9/22/23 CHARLES R. ELLIS

BRIDGE ENGINEER

SHEET 5 OF 6
DETAILS OF 273'-0"
CONTINUOUS PLATE GIRDER UNIT
VACHE GRASSE CREEK (SITE 3)

ROUTE SEC.

ARKANSAS STATE HIGHWAY COMMISSION

LITTLE ROCK, ARK.

DRAWN BY: CTM	DATE: 6/27/2023	FILENAME: b040861x3_s1.dgn
CHECKED BY: DBS	DATE: 8/25/23	SCALE: As Shown
DESIGNED BY: CTM	DATE: 6/2023	

BRIDGE NO. 07463 DRAWING NO. 66908

PRINT DATE: 9/22/2023

DATE REVISED	DATE REVISED	FED. RD. DIST. NO.	STATE	JOB NO.	SHEET NO.	TOTAL SHEETS
		6	ARK.	040861	169	291
		07463	- 273'-0" UNIT -		66909	

TABLE OF DEAD LOAD DEFLECTIONS (INCHES)

Span	Point of Deflection	Structural Steel									Structural Steel + Slab									Structural Steel + Slab + Rail + Sidewalk								
		Girder 1	Girder 2	Girder 3	Girder 4	Girder 5	Girder 6	Girder 7	Girder 8	Girder 9	Girder 1	Girder 2	Girder 3	Girder 4	Girder 5	Girder 6	Girder 7	Girder 8	Girder 9	Girder 1	Girder 2	Girder 3	Girder 4	Girder 5	Girder 6	Girder 7	Girder 8	Girder 9
1	0.0	0	0	0	0	0	0	0	0	0	0	0	0	0	0	0	0	0	0	0	0	0	0	0	0	0	0	0
	0.1	0.068	0.066	0.067	0.066	0.065	0.064	0.060	0.056	0.049	0.411	0.416	0.432	0.432	0.423	0.414	0.382	0.344	0.289	0.488	0.465	0.466	0.460	0.449	0.441	0.413	0.386	0.355
	0.2	0.124	0.122	0.120	0.120	0.118	0.113	0.110	0.103	0.093	0.751	0.767	0.777	0.786	0.770	0.733	0.696	0.635	0.544	0.893	0.858	0.839	0.837	0.818	0.781	0.753	0.716	0.672
	0.3	0.161	0.156	0.157	0.158	0.156	0.151	0.142	0.132	0.117	0.977	0.987	1.020	1.034	1.018	0.973	0.898	0.809	0.686	1.163	1.105	1.101	1.101	1.082	1.037	0.971	0.913	0.845
	0.4	0.176	0.170	0.168	0.168	0.166	0.161	0.155	0.144	0.129	1.075	1.078	1.096	1.106	1.089	1.040	0.983	0.879	0.750	1.284	1.207	1.182	1.177	1.157	1.108	1.064	0.994	0.924
	0.5	0.162	0.157	0.157	0.159	0.158	0.152	0.145	0.134	0.121	0.990	1.004	1.028	1.047	1.037	0.986	0.919	0.815	0.702	1.181	1.122	1.108	1.114	1.102	1.051	0.994	0.922	0.864
	0.6	0.130	0.127	0.127	0.129	0.127	0.124	0.117	0.109	0.101	0.799	0.820	0.837	0.854	0.839	0.802	0.742	0.664	0.579	0.953	0.914	0.900	0.909	0.891	0.854	0.803	0.752	0.713
	0.7	0.087	0.085	0.085	0.087	0.087	0.083	0.081	0.075	0.070	0.546	0.560	0.569	0.585	0.576	0.542	0.510	0.456	0.400	0.650	0.622	0.611	0.622	0.611	0.577	0.552	0.516	0.491
	0.8	0.045	0.043	0.043	0.046	0.045	0.043	0.041	0.040	0.039	0.294	0.294	0.299	0.319	0.307	0.288	0.263	0.238	0.219	0.348	0.324	0.320	0.339	0.326	0.307	0.285	0.269	0.269
	0.9	0.013	0.012	0.013	0.013	0.011	0.010	0.009	0.012	0.011	0.097	0.096	0.096	0.094	0.084	0.071	0.058	0.072	0.063	0.113	0.104	0.102	0.100	0.089	0.075	0.062	0.082	0.078
2	0.0	0	0	0	0	0	0	0	0	0	0	0	0	0	0	0	0	0	0	0	0	0	0	0	0	0	0	0
	0.1	0.020	0.022	0.023	0.020	0.022	0.021	0.021	0.019	0.015	0.072	0.089	0.106	0.102	0.117	0.116	0.119	0.107	0.084	0.094	0.106	0.118	0.111	0.127	0.126	0.130	0.120	0.107
	0.2	0.067	0.068	0.071	0.072	0.072	0.071	0.067	0.057	0.049	0.294	0.328	0.367	0.400	0.407	0.410	0.392	0.333	0.279	0.368	0.378	0.402	0.431	0.437	0.440	0.425	0.375	0.350
	0.3	0.123	0.125	0.127	0.129	0.126	0.124	0.116	0.104	0.091	0.572	0.632	0.691	0.733	0.734	0.731	0.686	0.613	0.524	0.705	0.723	0.755	0.787	0.785	0.783	0.744	0.693	0.654
	0.4	0.166	0.166	0.167	0.170	0.173	0.167	0.156	0.139	0.123	0.798	0.869	0.926	0.980	1.020	0.998	0.932	0.820	0.710	0.979	0.990	1.010	1.050	1.090	1.069	1.012	0.930	0.883
	0.5	0.187	0.185	0.182	0.186	0.186	0.179	0.167	0.155	0.137	0.918	0.982	1.019	1.078	1.103	1.071	0.999	0.916	0.792	1.125	1.117	1.110	1.155	1.177	1.145	1.084	1.042	0.985
	0.6	0.166	0.165	0.169	0.174	0.172	0.164	0.153	0.140	0.125	0.818	0.880	0.949	1.008	1.019	0.976	0.911	0.825	0.716	1.003	0.999	1.033	1.081	1.088	1.044	0.990	0.940	0.887
	0.7	0.122	0.122	0.125	0.129	0.129	0.124	0.116	0.108	0.094	0.597	0.645	0.696	0.739	0.753	0.729	0.683	0.630	0.539	0.734	0.731	0.758	0.793	0.805	0.781	0.744	0.719	0.667
	0.8	0.065	0.066	0.069	0.073	0.074	0.070	0.066	0.060	0.054	0.303	0.341	0.376	0.412	0.428	0.407	0.383	0.344	0.304	0.378	0.387	0.410	0.444	0.459	0.437	0.418	0.394	0.379
	0.9	0.019	0.020	0.023	0.025	0.023	0.020	0.021	0.020	0.018	0.082	0.096	0.119	0.133	0.122	0.109	0.116	0.111	0.098	0.105	0.110	0.131	0.145	0.132	0.118	0.128	0.130	0.125
3	0.0	0	0	0	0	0	0	0	0	0	0	0	0	0	0	0	0	0	0	0	0	0	0	0	0	0	0	0
	0.1	0.015	0.014	0.012	0.011	0.012	0.012	0.011	0.010	0.009	0.093	0.092	0.079	0.080	0.083	0.087	0.074	0.068	0.056	0.109	0.103	0.085	0.085	0.088	0.092	0.078	0.073	0.069
	0.2	0.050	0.049	0.044	0.044	0.044	0.043	0.039	0.037	0.034	0.298	0.296	0.277	0.291	0.298	0.285	0.257	0.231	0.201	0.354	0.332	0.299	0.310	0.316	0.303	0.274	0.255	0.249
	0.3	0.094	0.091	0.088	0.087	0.086	0.084	0.076	0.071	0.064	0.549	0.546	0.550	0.564	0.567	0.550	0.491	0.447	0.378	0.653	0.613	0.595	0.600	0.602	0.585	0.526	0.499	0.468
	0.4	0.138	0.134	0.130	0.128	0.126	0.121	0.114	0.106	0.095	0.802	0.804	0.810	0.824	0.825	0.790	0.735	0.663	0.561	0.957	0.904	0.876	0.878	0.876	0.840	0.790	0.744	0.694
	0.5	0.171	0.165	0.161	0.161	0.157	0.151	0.140	0.129	0.115	0.994	0.993	1.007	1.032	1.023	0.979	0.901	0.805	0.683	1.188	1.117	1.089	1.100	1.086	1.041	0.971	0.907	0.844
	0.6	0.186	0.178	0.175	0.170	0.165	0.158	0.148	0.139	0.124	1.085	1.080	1.094	1.092	1.073	1.023	0.951	0.865	0.737	1.300	1.214	1.183	1.164	1.139	1.088	1.025	0.977	0.911
	0.7	0.171	0.164	0.160	0.159	0.154	0.146	0.138	0.127	0.112	0.999	0.998	1.004	1.018	1.000	0.950	0.889	0.790	0.668	1.196	1.120	1.085	1.085	1.062	1.011	0.959	0.892	0.823
	0.8	0.134	0.129	0.126	0.123	0.118	0.112	0.105	0.096	0.086	0.780	0.787	0.788	0.785	0.762	0.726	0.677	0.601	0.512	0.935	0.883	0.852	0.837	0.809	0.772	0.731	0.678	0.631
	0.9	0.073	0.070	0.068	0.066	0.064	0.062	0.059	0.052	0.047	0.428	0.425	0.425	0.420	0.414	0.401	0.382	0.327	0.279	0.512	0.475	0.459	0.447	0.440	0.427	0.413	0.368	0.343
	0.0	0	0	0	0	0	0	0	0	0	0	0	0	0	0	0	0	0	0	0	0	0	0	0	0	0	0	0

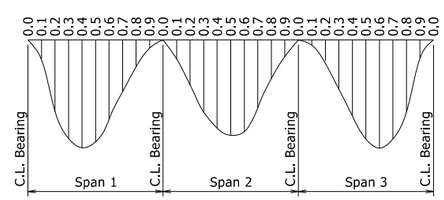

DEAD LOAD DEFLECTION DIAGRAM

No Scale

Camber for Dead Load Deflection ± ¼" tolerance.
Deflections shown are along C.L. Girder from a plane from C.L. Bearing to C.L. Bearing.
Negative sign (-) indicates point above chord.
Vertical curve corrections are not included.

STATE OF ARKANSAS
LICENSED PROFESSIONAL ENGINEER
No. 9235
9/22/23
CHARLES R. ELLIS

BRIDGE ENGINEER

SHEET 6 OF 6
DETAILS OF 273'-0"
CONTINUOUS PLATE GIRDER UNIT
VACHE GRASSE CREEK (SITE 3)

ROUTE SEC.

ARKANSAS STATE HIGHWAY COMMISSION

LITTLE ROCK, ARK.

DRAWN BY: CTM DATE: 6/27/2023 FILENAME: b040861x3_s1.dgn
CHECKED BY: DBS DATE: 8/25/23 SCALE: As Shown
DESIGNED BY: CTM DATE: 6/2023

BRIDGE NO. 07463 DRAWING NO. 66909

PRINT DATE: 9/22/2023

DATE REVISED	DATE REVISED	FED. RD. DIST. NO.	STATE	JOB NO.	SHEET NO.	TOTAL SHEETS
		6	ARK.	040861	170	291
		07644		- LAYOUT -	66910	

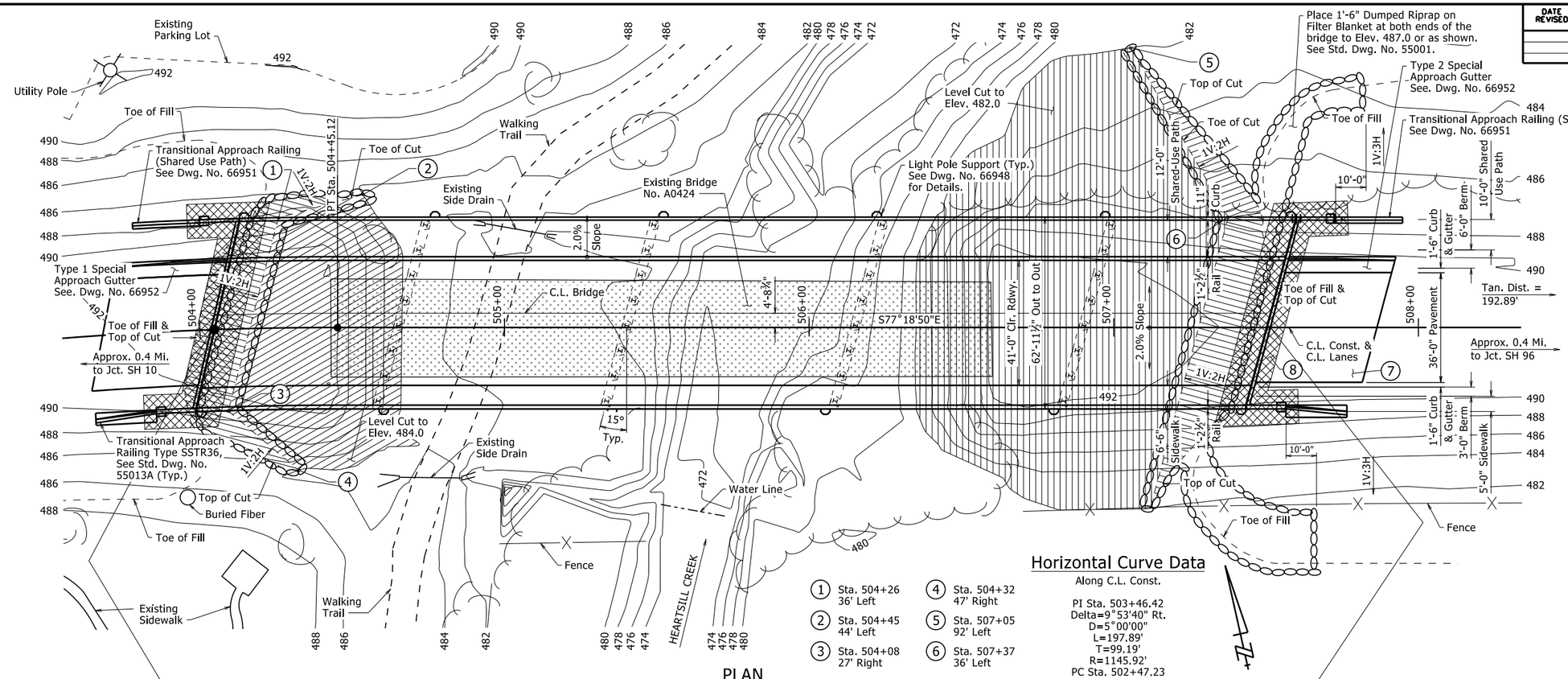

PLAN

Horizontal Curve Data

Along C.L. Const.

PI Sta. 503+46.42
Delta=9°53'40" Rt.
D=5°00'00"
L=197.89'
T=99.19'
R=1145.92'
PC Sta. 502+47.23
PT Sta. 504+45.12

1. Sta. 504+26, 36' Left
2. Sta. 504+45, 44' Left
3. Sta. 504+08, 27' Right
4. Sta. 504+32, 47' Right
5. Sta. 507+05, 92' Left
6. Sta. 507+37, 36' Left

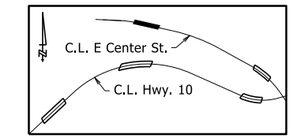

LOCATION SKETCH

No Scale

For R/W Data, see Roadway Plans.

The Contractor shall excavate the existing embankment at the beginning of bridge to Elev. 484.0 and at the end of bridge to Elev. 482.0. Approx. 3,885 cu. yds. of excavation.

C.L. Construction is on a 5°00' curve right up to Sta. 504+45.12. C.L. Beams, and the longitudinal lines of the bridge, approach slabs and gutters, and transitional approach railing shall be constructed on curves concentric with C.L. Construction up to this station. Bent 1 shall be constructed along lines skewed from radial lines to C.L. Construction. Skew is measured at C.L. Joint for End Bents and at C.L. Bent for Intermediate Bents.

7. Type F Approach Slab (width, "W" = 36'-0") at both ends of bridge. See Std. Dwg. No. 55040F1.
8. Aggregate Base Course (Class 7) at both ends of bridge. See "DETAIL A" on Dwg. No. 66873.

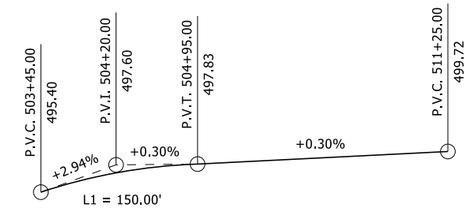

VERTICAL ALIGNMENT DATA

Along C.L. Const.

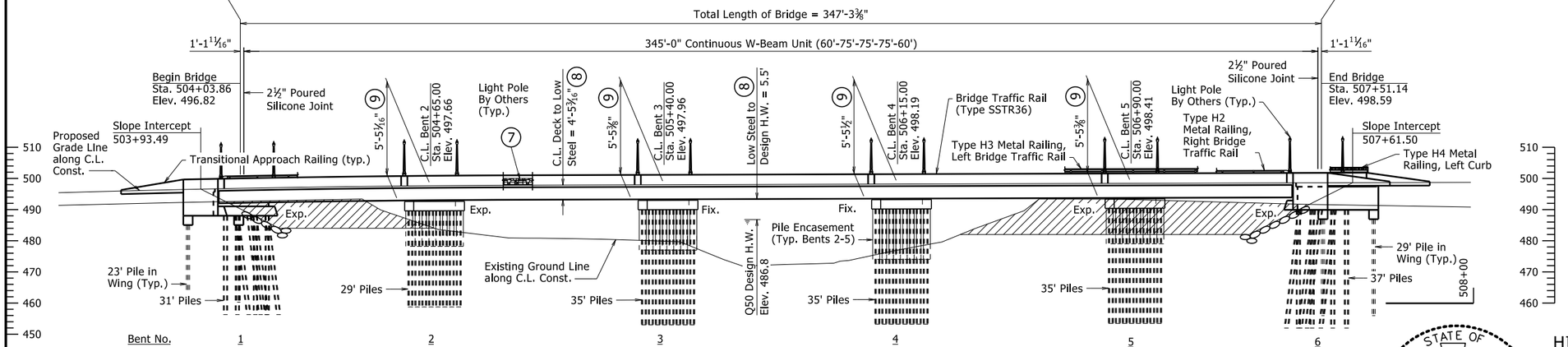

Stations shown are along C.L. Construction. Elevations shown are theoretical working point elevations at C.L. Construction. Any vertical dimension referenced to Top of Deck at C.L. Construction is based on theoretical working point elevation at C.L. Construction. See "ROUNDING DETAIL" on Standard Drawing Number 55007 for additional information.

ELEVATION

For General Notes, see Dwg. No. 66872.

For Hydraulic Data, see Dwg. No. 66916.

For Soil Borings, see Dwg. No. 66915 & 66916.

7. Ashlar Stone Pattern, see Special Provision "Architectural Finish" and Dwg. Nos. 66940, 66947, 66951, & 66952.
8. Low Steel Elev. 492.28 occurs at Sta. 503+98.36, 24'-1¾" Right of C.L. Const.
9. Dimension taken from Top of Deck at C.L. Bent to Low Side Top of Cap

STATE OF ARKANSAS
Charles R. Ellis
7-24-2023 9:27 AM
LICENSED PROFESSIONAL ENGINEER
No. 9235
9/22/23
CHARLES R. ELLIS
BRIDGE ENGINEER

SHEET 1 OF 4
LAYOUT OF BRIDGE
HIGHWAY 10 OVER HEARTSILL CREEK (SITE 4)
HWY. 10 - HWY. 96 (GREENWOOD BYPASS) (S)
SEBASTIAN COUNTY

ROUTE 10 SEC. 1

ARKANSAS STATE HIGHWAY COMMISSION

LITTLE ROCK, ARK.

DRAWN BY: JCG	DATE: 12/2/2022	FILENAME: b040861x4_L1.dgn	
CHECKED BY: JYP	DATE: 12/14/2022	SCALE: 1" = 20'	
DESIGNED BY: CNL	DATE: 7/1/2022		

BRIDGE NO. 07644 DRAWING NO. 66910

PRINT DATE: 9/22/2023

DATE REVISED	DATE REVISED	FED. RD. DIST. NO.	STATE	JOB NO.	SHEET NO.	TOTAL SHEETS
		6	ARK.	040861	171	291
		07644		- LAYOUT -		66911

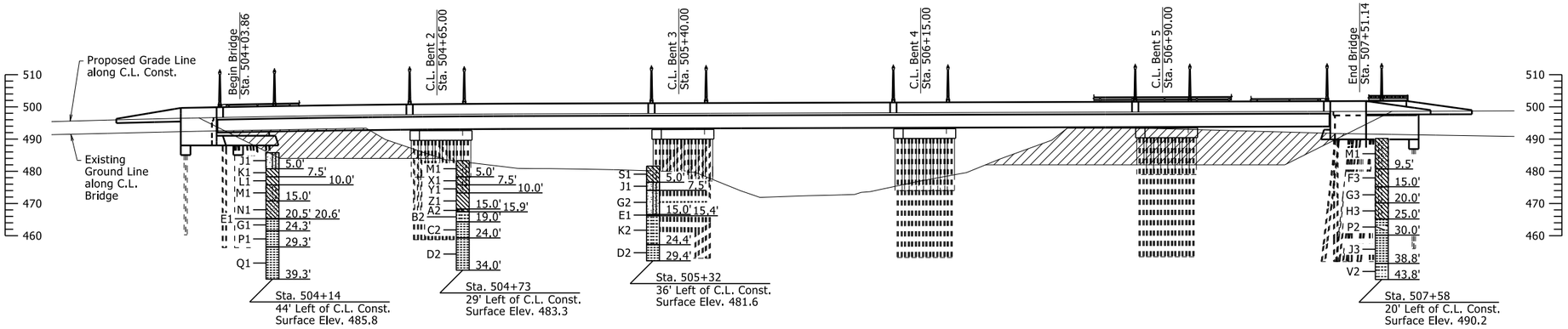

ELEVATION OF SOIL BORINGS - LEFT OF C.L. CONST.

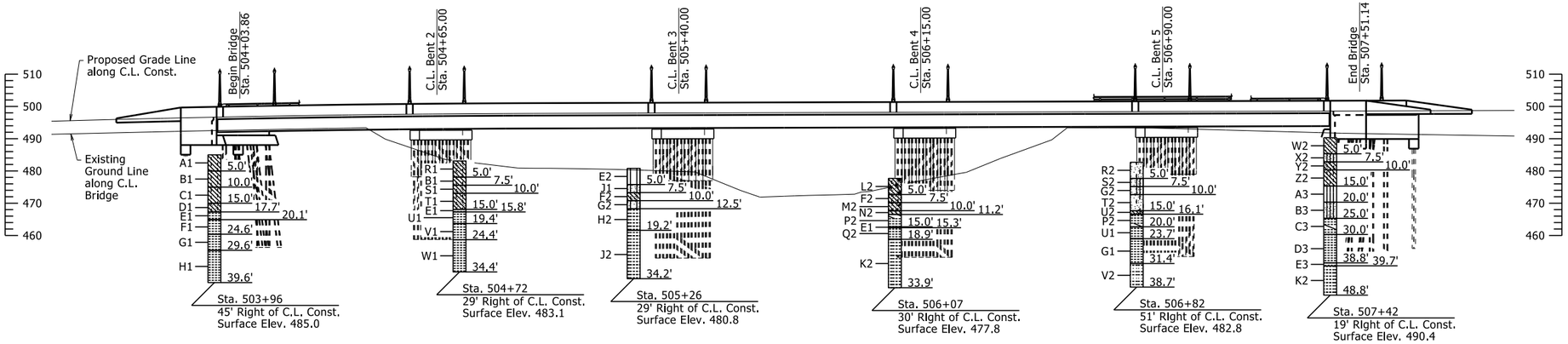

ELEVATION OF SOIL BORINGS - RIGHT OF C.L. CONST.

For Boring Legend and "N" Values, see Dwg. No. 66916.

STATE OF ARKANSAS
LICENSED PROFESSIONAL ENGINEER
No. 9235
9/22/23
CHARLES R. ELLIS

BRIDGE ENGINEER

SHEET 2 OF 4
LAYOUT OF BRIDGE
HIGHWAY 10 OVER HEARTSILL CREEK (SITE 4)
HWY. 10 - HWY. 96 (GREENWOOD BYPASS) (S)
SEBASTIAN COUNTY

ROUTE 10 SEC. 1

ARKANSAS STATE HIGHWAY COMMISSION

LITTLE ROCK, ARK.

DRAWN BY:	JCG	DATE:	12/2/2022	FILENAME:	b040861x4_L1.dgn
CHECKED BY:	JYP	DATE:	12/14/2022	SCALE:	1" = 20'
DESIGNED BY:	CNL	DATE:	7/1/2022		

BRIDGE NO. 07644 DRAWING NO. 66911

PRINT DATE: 9/22/2023

DATE REVISED	DATE REVISED	FED. RD. DIST. NO.	STATE	JOB NO.	SHEET NO.	TOTAL SHEETS
		6	ARK.	040861	172	291
		07644		- LAYOUT -	66912	

BORING LEGEND

A1-Moist, Very Soft, Brown Silty Clay
B1-Moist, Medium Stiff, Brown Silty Clay
C1-Moist, Stiff, Brown Silty Clay
D1-Wet, Stiff, Sandy Silty Clay with Trace Gravel (Shale Fragments)
E1-SHALE - Weathered, Medium Hard, Gray
F1-SHALE - Slightly Weathered, Medium Hard with Soft Layers, Gray
G1-SHALE - Unweathered, Medium Hard, Gray
H1-SHALE - Unweathered, Medium Hard, Occasional Fractures, Gray
J1-Moist, Very Loose, Brown Sandy Silt
K1-Moist, Medium Stiff, Brown Lean Clay
L1-Moist, Soft, Brown Lean Clay
M1-Moist, Medium Stiff, Brown Silty Clay with Sand
N1-Moist, Stiff, Brown Sandy Lean Clay
P1-SHALE - Unweathered, Medium Hard, Frequent Fractures and Slickensides, Gray
Q1-SHALE - Unweathered with Weathered Layers, Medium Hard with Soft Layers, Frequent Fractures and Slickensides, Gray
R1-Moist, Medium Stiff, Brown Sandy Silty Clay
S1-Moist, Soft, Brown Sandy Silty Clay
T1-Wet, Soft, Brown Sandy Silty Clay
U1-SHALE - Slightly Weathered, Medium Hard, Gray
V1-SHALE - Unweathered, Medium Hard, Occasional Fractures and Slickensides, Gray
W1-SHALE - Unweathered with Highly Weathered Layers, Medium Hard with Soft Layers, Frequent Fractures and Slickensides, Gray
X1-Moist, Stiff, Brown Silty Clay with Sand
Y1-Moist, Medium Loose, Brown Silt with Sand
Z1-Wet, Soft, Brown Sandy Lean Clay
A2-Wet, Hard, Brown Sandy Lean Clay
B2-SHALE WITH FREQUENT SANDSTONE PARTINGS AND SEAMS - Slightly Weathered, Medium Hard with Hard Layers, Gray
C2-SHALE - Slightly Weathered, Medium Hard, Occasional Fractures, Gray
D2-SHALE WITH OCCASIONAL SANDSTONE PARTINGS AND SEAMS - Unweathered, Medium Hard, Gray
E2-Moist, Very Loose, Brown Silt
F2-Wet, Very Soft, Brown Sandy Silty Clay
G2-Wet, Very Loose, Brown Sandy Silt
H2-SHALE WITH FREQUENT SANDSTONE PARTINGS AND SEAMS - Weathered with Highly Weathered Layers, Medium Hard with Soft Layers, Frequent Fractures, Gray
J2-SHALE WITH FREQUENT SANDSTONE PARTINGS AND SEAMS - Slightly Weathered with Weathered Layers, Medium Hard, Frequent Fractures, Gray
K2-SHALE WITH FREQUENT SANDSTONE PARTINGS AND SEAMS - Unweathered, Medium Hard with Hard Layers, Gray
L2-Moist, Very Soft, Brown Sandy Silty Clay with Organic Matter
M2-Wet, Medium Stiff, Gray Sandy Lean Clay with Gravel
N2-Wet, Very Stiff, Gray Sandy Lean Clay
P2-SHALE - Highly Weathered, Very Soft, Gray
Q2-SHALE - Slightly Weathered, Medium Hard, Occasional Fractures, Gray
R2-Moist, Loose, Brown Silty Sand
S2-Moist, Loose, Brown Sandy Silt
T2-Wet, Very Loose, Brown Silty Sand
U2-Wet, Very Stiff, Brown Sandy Silty Clay
V2-SHALE WITH INTERBEDDED SANDSTONE - Unweathered, Medium Hard with Hard Layers, Gray
W2-Moist, Medium Stiff, Brown Sandy Lean Clay
X2-Wet, Loose, Brown Sandy Silt
Y2-Wet, Medium Stiff, Brown Silty Clay with Sand
Z2-Wet, Soft, Brown Silty Clay
A3-Wet, Very Loose, Brown Silt
B3-Wet, Loose, Light Gray Sandy Silt
C3-SHALE - Highly Weathered, Soft, Gray
D3-SHALE - Unweathered, Medium Hard, Occasional Slickensides, Gray
E3-SANDSTONE WITH INTERBEDDED SHALE - Unweathered, Cemented, Gray
F3-Moist, Soft, Brown Silty Clay
G3-Wet, Soft, Light Gray Silty Clay
H3-Wet, Very Soft, Light Gray Silty Clay
J3-SHALE - Unweathered, Medium Hard, Gray

"N" VALUES

Sta. 504+14 - 44' Left of C.L. Const.
3.0- 4.0,N=2
5.5- 6.5,N=5
8.0- 9.0,N=3
10.5- 11.5,N=5
15.5- 16.5,N=13
20.5- 20.6,N=11(1")

Sta. 504+73 - 29' Left of C.L. Const.
3.0- 4.0,N=8
5.5- 6.5,N=10
8.0- 9.0,N=7
10.5- 11.5,N=3
15.5- 16.1,N=34(7")

Sta. 505+32 - 36' Left of C.L. Const.
3.0- 4.0,N=2
5.5- 6.5,N=3
8.0- 9.0,N=0
10.5- 11.5,N=0
15.0- 15.4,N=38(5")

Sta. 507+58 - 20' Left of C.L. Const.
5.0- 6.0,N=6
10.0- 11.0,N=2
15.5- 16.5,N=3
20.5- 21.5,N=0
25.5- 26.5,N=27
30.0- 30.0,N=20(0")

Sta. 503+96 - 45' Right of C.L. Const.
3.0- 4.0,N=0
5.5- 6.5,N=6
8.0- 9.0,N=5
10.5- 11.5,N=12
15.5- 16.5,N=12
20.0- 20.1,N=12(1")

Sta. 504+72 - 29' Right of C.L. Const.
3.0- 4.0,N=6
5.5- 6.5,N=5
8.0- 9.0,N=3
10.5- 11.5,N=4
15.5- 15.6,N=22(1")

Sta. 505+26 - 29' Right of C.L. Const.
3.0- 4.0,N=4
5.5- 6.5,N=0
8.0- 9.0,N=0
10.5- 11.5,N=0
15.0- 15.4,N=40(5")

Sta. 506+07 - 30' Right of C.L. Const.
3.0- 4.0,N=1
5.5- 6.5,N=1
8.0- 9.0,N=8
10.5- 11.5,N=17
15.0- 15.3,N=38(4")

Sta. 506+82 - 51' Right of C.L. Const.
3.0- 4.0,N=5
5.5- 6.5,N=9
8.0- 9.0,N=0
10.5- 11.5,N=3
15.5- 16.5,N=26
20.0- 20.0,N=20(0")

Sta. 507+42 - 19' Right of C.L. Const.
3.0- 4.0,N=8
5.5- 6.5,N=5
8.0- 9.0,N=6
10.5- 11.5,N=4
15.5- 16.5,N=0
20.5- 21.5,N=5
25.5- 26.5,N=36
30.0- 30.0,N=30(0")

HYDRAULIC DATA

FLOOD DESCRIPTION	FREQUENCY	TOTAL DISCHARGE (2)	DISCHARGE THIS SITE	NATURAL WATER SURFACE ELEVATION (1)	WATER SURFACE ELEVATION WITH BACKWATER
	YEARS	CFS	CFS	FEET	FEET
Design	50	16,934	11,693	486.5	486.8
Base	100	20,893	14,360	487.2	487.7
Extreme	500	33,875	22,488	489.1	490.0
Overtopping	>500	-	-	-	-

(1) Unconstricted water surface elevation without structures or roadway approaches.

(2) The total discharge includes flow at this site and Site 5.

Q100 backwater elevation for existing structure = 490.5 feet
Proposed Low Bridge Chord Elev. = 492.28 feet

Drainage Area = 42.2 square miles
Historical H.W. Elevation = N/A

DETAIL DRAWINGS:	DRAWING NO(S).
End Bents	66914-66917 & 66939-66942
Intermediate Bents	66918 & 66943
Steel H-Piling	66944
Elastomeric Bearings	66945-66946
345'-0" Continuous W-Beam Unit	66919-66924 & 66947-66948
Type H3 Railing	66949
Type H4 Railing	66950
Transitional Approach Railing (Shared Use Path)	66951
General Notes For Steel Bridge Structures	55006
Details For Steel Bridge Structures	55007
Poured Silicone Joints	55008
Transitional Approach Railing	55013A
Type H2 Railing	55015
Bridge Traffic Rail	55070

STATE OF ARKANSAS
LICENSED PROFESSIONAL ENGINEER
No. 9235
9/22/23
CHARLES R. ELLIS

Charles R. Ellis
9/22/2023 9:22 AM

BRIDGE ENGINEER

SHEET 3 OF 4
LAYOUT OF BRIDGE
HIGHWAY 10 OVER HEARTSILL CREEK (SITE 4)
HWY. 10 - HWY. 96 (GREENWOOD BYPASS) (S)
SEBASTIAN COUNTY

ROUTE 10 SEC. 1

ARKANSAS STATE HIGHWAY COMMISSION
LITTLE ROCK, ARK.

DRAWN BY: JCG DATE: 12/2/2022
CHECKED BY: JYP DATE: 12/14/2022
DESIGNED BY: CNL DATE: 7/1/2022
FILENAME: b040861x4_L1.dgn
SCALE: 1" = 20'

BRIDGE NO. 07644 DRAWING NO. 66912

PRINT DATE: 9/22/2023

DATE REVISED	DATE REVISED	FED. RD. DIST. NO.	STATE	JOB NO.	SHEET NO.	TOTAL SHEETS
		6	ARK.	040861	173	291
		07644		- LAYOUT -	66913	

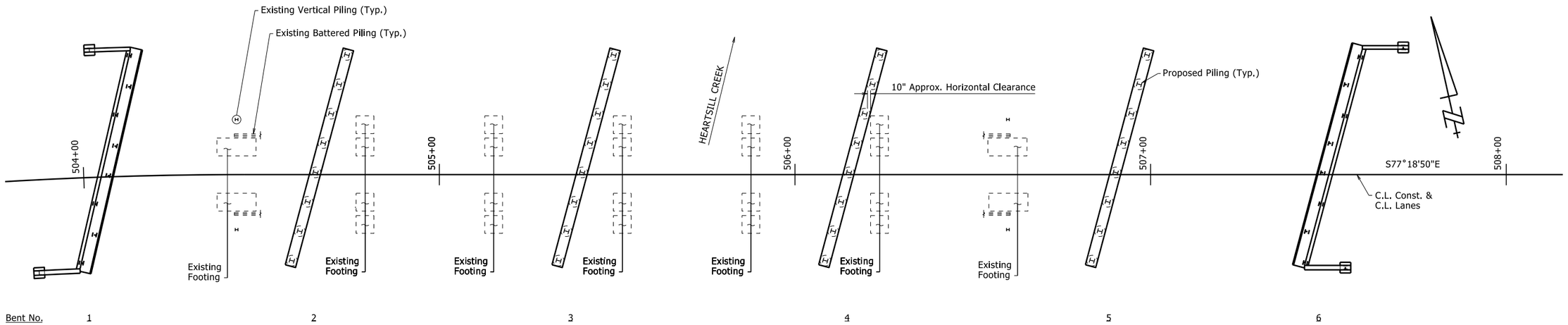

FOUNDATION PLAN

Location of existing bridge foundations are based on existing bridge plans. If an existing footing conflicts with the proposed piling, excavate and remove the conflicting portion, and backfill with an approved material. Labor and material for excavation, removal and disposal of material, and backfill will not be paid for directly but will be considered subsidiary to the item "Removal of Existing Bridge Structure (Site No. _)".

STATE OF ARKANSAS
LICENSED PROFESSIONAL ENGINEER
No. 9235
9/22/23
CHARLES R. ELLIS

BRIDGE ENGINEER

SHEET 4 OF 4
LAYOUT OF BRIDGE
HIGHWAY 10 OVER HEARTSILL CREEK (SITE 4)
HWY. 10 - HWY. 96 (GREENWOOD BYPASS) (S)
SEBASTIAN COUNTY

ROUTE 10 SEC. 1

ARKANSAS STATE HIGHWAY COMMISSION

LITTLE ROCK, ARK.

DRAWN BY: JCG DATE: 12/2/2022
CHECKED BY: JYP DATE: 12/14/2022
DESIGNED BY: CNL DATE: 7/1/2022
FILENAME: b040861x4_L1.dgn
SCALE: 1" = 15'

BRIDGE NO. 07644 DRAWING NO. 66913

PRINT DATE: 9/22/2023

DATE REVISED	DATE REVISED	FED. RD. DIST. NO.	STATE	JOB NO.	SHEET NO.	TOTAL SHEETS
		6	ARK.	040861	174	291
		07644 - END BENTS - 66914				

NOTES:

See Dwg. Nos. 66940 & 66941 for Wing Views and Sections.

See Dwg. No. 66942 for Three Dimensional View of Wing.

Wings and rails are constructed on curves concentric to C.L. Const.

For General Notes, see Std. Dwg. No. 55006 and Dwg. No. 66939.

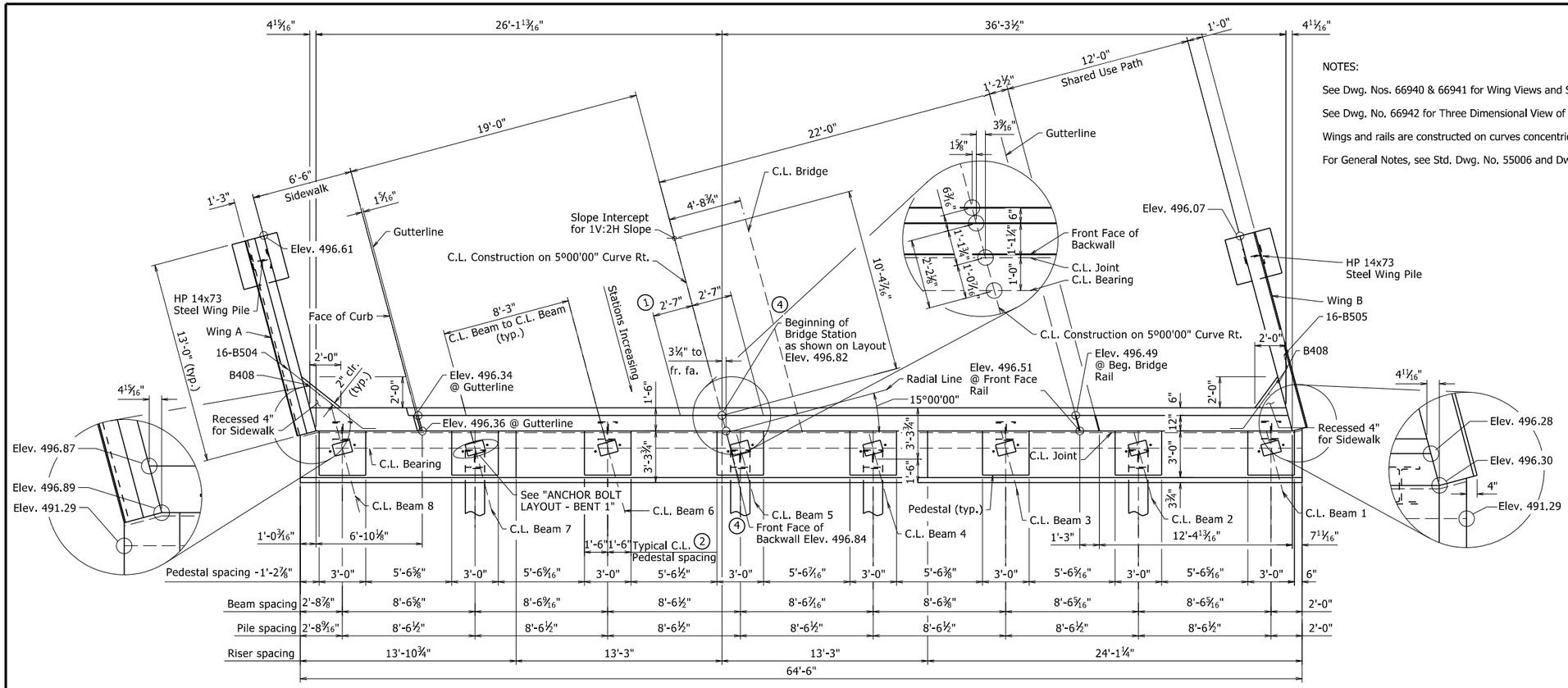

PLAN - BENT 1

¼" = 1'-0"

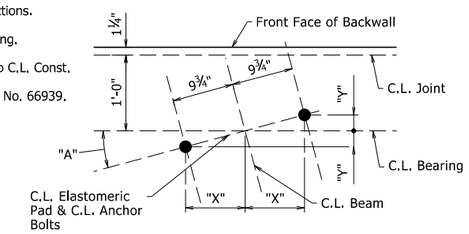

For Details of Elastomeric Bearings, see Dwg. Nos. 66945 & 66946.

ANCHOR BOLT LAYOUT - BENT 1

NO SCALE

	"A"	"X"	"Y"
Beam 1	14°30'46"	9 7/16"	2 7/16"
Beam 2	14°37'03"	9 7/16"	2 7/16"
Beam 3	14°43'24"	9 7/16"	2½"
Beam 4	14°49'52"	9 7/16"	2½"
Beam 5	14°56'25"	9 7/16"	2½"
Beam 6	15°03'04"	9 7/16"	2 9/16"
Beam 7	15°09'49"	9 7/16"	2 9/16"
Beam 8	15°16'40"	9⅜"	2 9/16"

(1) See "ROUNDING DETAIL" on Std. Dwg. No. 55007.

(2) Pedestals shall be cast level at the elevations shown in "ELEVATION - BENT 1". See Dwg. No. 66939 for "PEDESTAL PLAN" & "TYPICAL PEDESTAL DETAILS".

(3) Measured at C.L. Construction at Front Face of Backwall to Working Point.

(4) Measured at Working Point.

(5) See Dwg. No. 66939 for "SECTION A-A", "SECTION B-B", "SECTION C-C", "SECTION D-D", "SECTION E-E", and Dwg. No. 66916 for "VIEW F-F" & "VIEW G-G", for placement of reinforcing.

(6) See Dwg. No. 66939 for "SIDEWALK & CURB DETAIL".

(7) See Dwg. No. 66916 for "LAYOUT OF PILES - BENT 1".

(8) See Dwg. No. 66941 for "ELEVATION OF BRIDGE TRAFFIC RAIL (SSTR36) -SHARED USE PATH".

(9) 1'-9" minimum lapped splice length

(10) 2'-8" minimum lapped splice length

(11) 3'-5" minimum lapped splice length

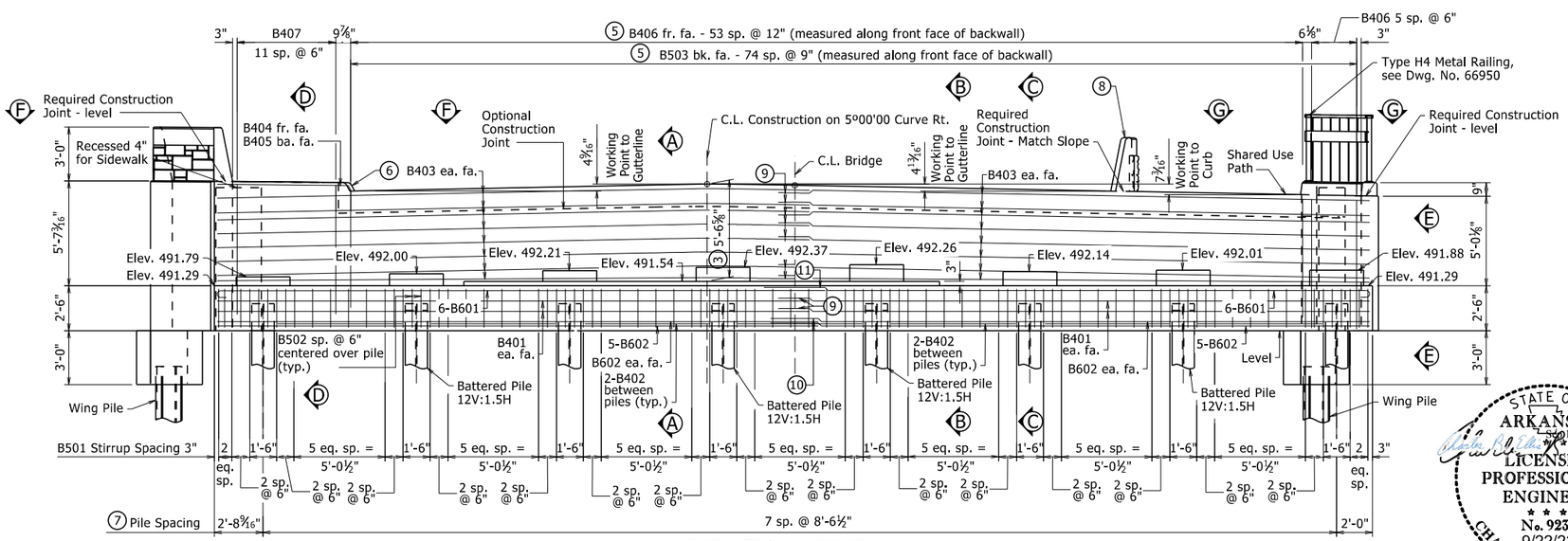

ELEVATION - BENT 1

LOOKING BACK

¼" = 1'-0"

STATE OF ARKANSAS
9/22/2023 9:27:11 AM
LICENSED PROFESSIONAL ENGINEER
No. 9235
9/22/23
CHARLES R. ELLIS

BRIDGE ENGINEER

SHEET 1 OF 4
DETAILS OF END BENTS
HEARTSILL CREEK (SITE 4)

ROUTE SEC.

ARKANSAS STATE HIGHWAY COMMISSION

LITTLE ROCK, ARK.

DRAWN BY:	YG	DATE:	7/31/2023	FILENAME:	b040861x4_b1.dgn
CHECKED BY:	MCB	DATE:	8/30/2023	SCALE:	AS NOTED
DESIGNED BY:	PGT	DATE:	7/18/2023		

BRIDGE NO. 07644 DRAWING NO. 66914

PRINT DATE: 9/22/2023

DATE REVISED	DATE REVISED	FED. RD. DIST. NO.	STATE	JOB NO.	SHEET NO.	TOTAL SHEETS
		6	ARK.	040861	175	291
		07644 - END BENTS - 66915				

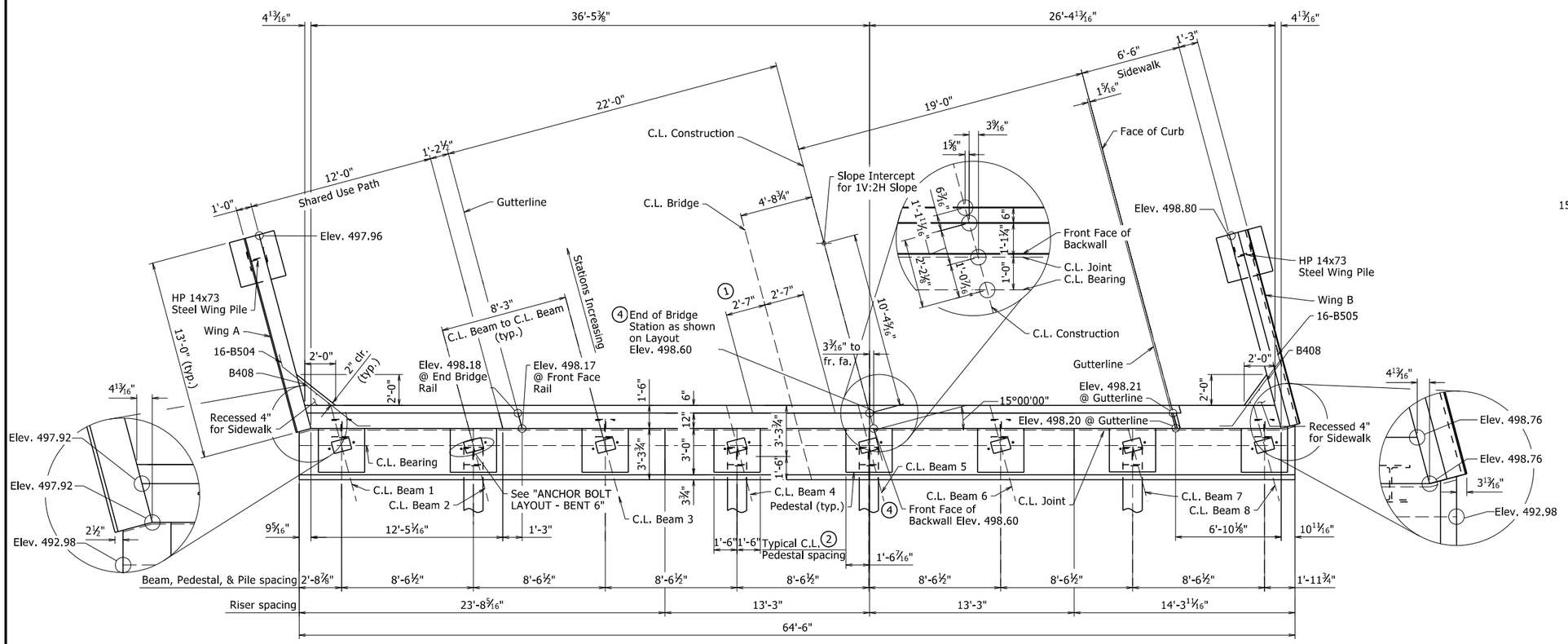

PLAN - BENT 6

¼" = 1'-0"

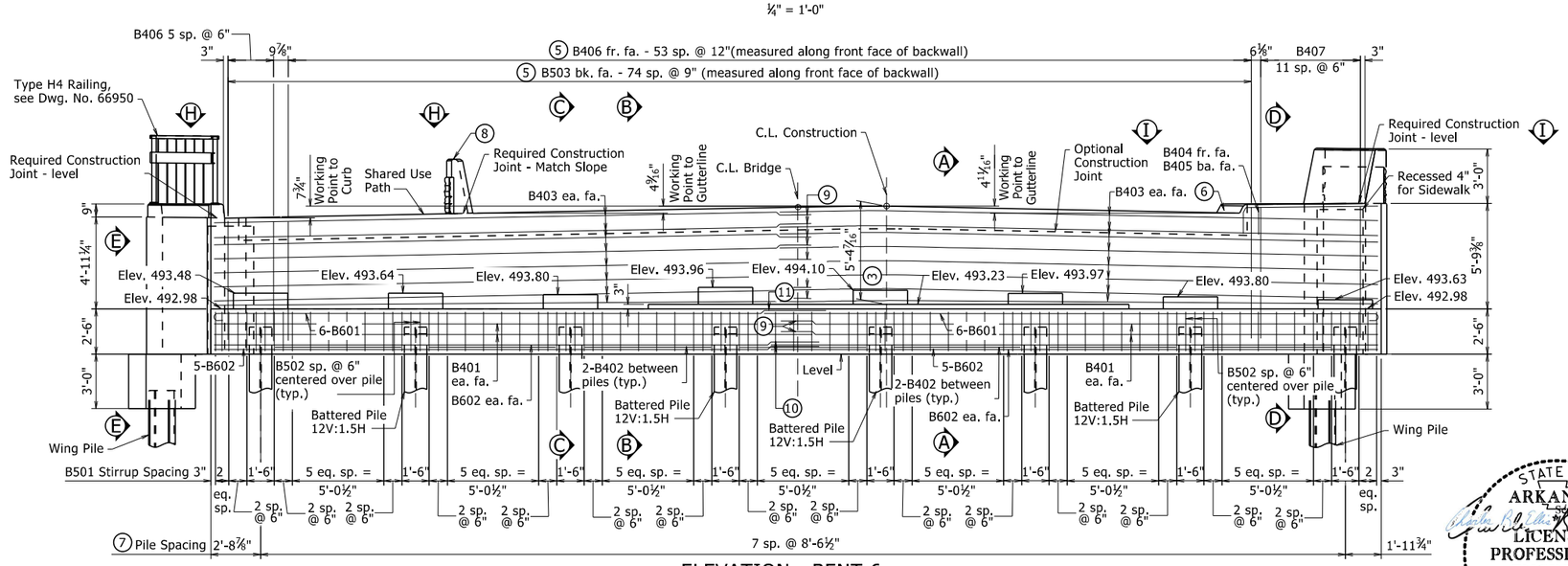

ELEVATION - BENT 6

LOOKING AHEAD

¼" = 1'-0"

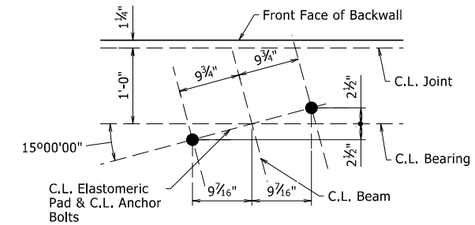

For Details of Elastomeric Bearings, see Dwg. Nos. 66945 & 66946.

ANCHOR BOLT LAYOUT - BENT 6

NO SCALE

1. See "ROUNDING DETAIL" on Std. Dwg. No. 55007.
2. Pedestals shall be cast level at the elevations shown in "ELEVATION-BENT 6". See Dwg. No. 66939 for "PEDESTAL PLAN" & "TYPICAL PEDESTAL DETAILS".
3. Measured at C.L. Construction at Front Face of Backwall to Working Point.
4. Measured at Working Point.
5. See Dwg. No. 66939 for "SECTION A-A", "SECTION B-B", "SECTION C-C", "SECTION D-D", "SECTION E-E and Dwg. No. 66916 for "VIEW H-H" & "VIEW I-I", for placement of reinforcing.
6. See Dwg. No. 66939 for "SIDEWALK & CURB DETAIL".
7. See Dwg. No. 66916 for "LAYOUT OF PILES - BENT 6".
8. See Dwg. No. 66941 for "ELEVATION OF BRIDGE TRAFFIC RAIL (SSTR36) -SHARED USE PATH
9. 1'-9" minimum lapped splice length
10. 2'-8" minimum lapped splice length
11. 3'-5" minimum lapped splice length

NOTES:

See Dwg. Nos. 66940 & 66941 for Wing Views and Sections.

See Dwg. No. 66942 for Three Dimensional View of Wing.

Wings and rails are constructed on curves concentric to C.L. Const.

For General Notes, see Std. Dwg. No. 55006 and Dwg. No. 66939.

STATE OF ARKANSAS
LICENSED PROFESSIONAL ENGINEER
No. 9235
9/22/23
CHARLES R. ELLIS
BRIDGE ENGINEER

SHEET 2 OF 4
DETAILS OF END BENTS
HEARTSILL CREEK (SITE 4)

ROUTE SEC.

ARKANSAS STATE HIGHWAY COMMISSION

LITTLE ROCK, ARK.

DRAWN BY: YG DATE: 7/31/2023
CHECKED BY: MCB DATE: 8/30/2023
DESIGNED BY: PGT DATE: 7/18/2023
FILENAME: b040861x4_b1.dgn
SCALE: AS NOTED

BRIDGE NO. 07644 DRAWING NO. 66915

PRINT DATE: 9/22/2023

DATE REVISED	DATE REVISED	FED. RD. DIST. NO.	STATE	JOB NO.	SHEET NO.	TOTAL SHEETS
		6	ARK.	040861	176	291
		07644 - END BENTS - 66916				

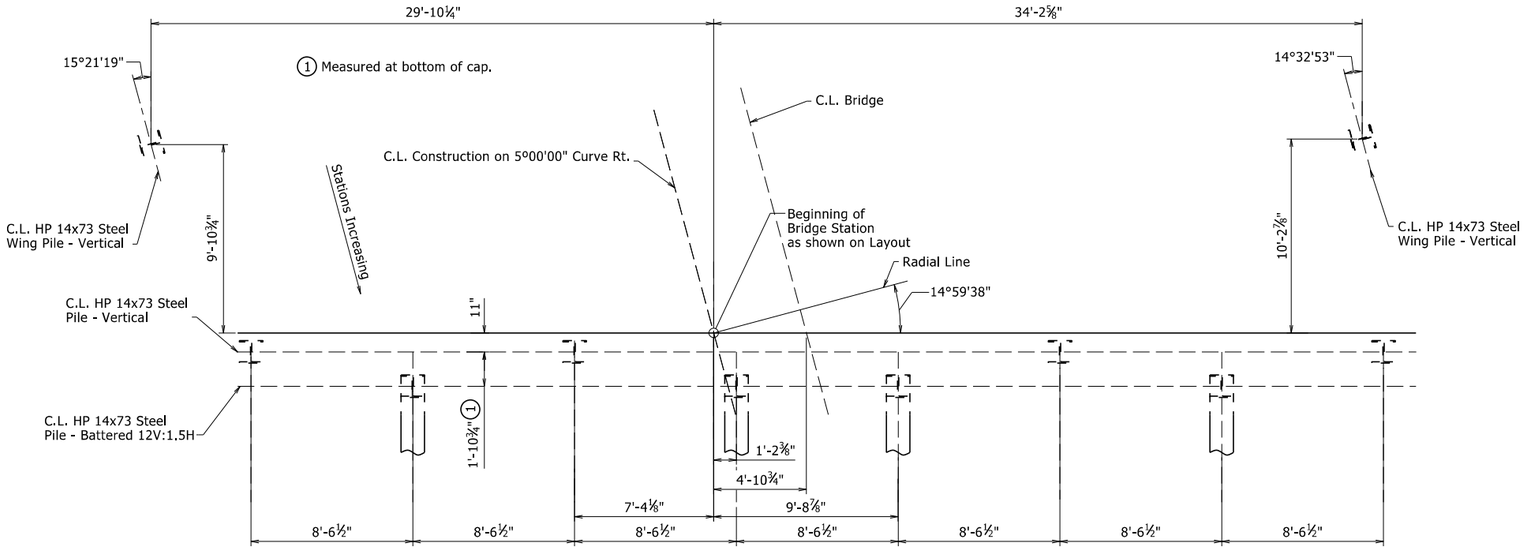

LAYOUT OF PILES - BENT 1

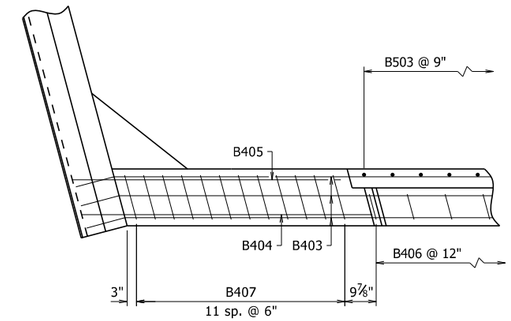

VIEW F-F

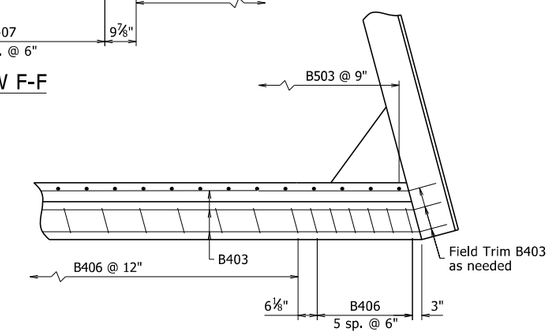

VIEW G-G

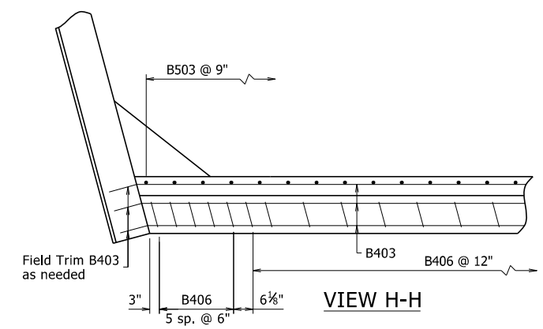

VIEW H-H

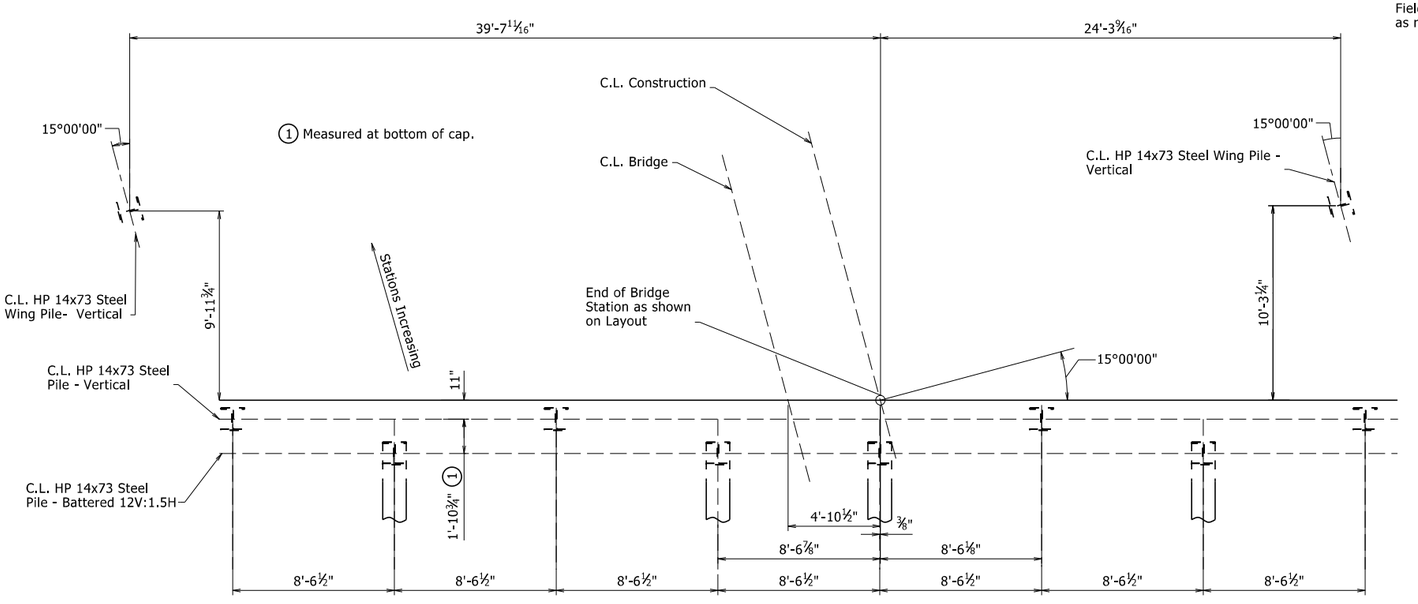

LAYOUT OF PILES - BENT 6

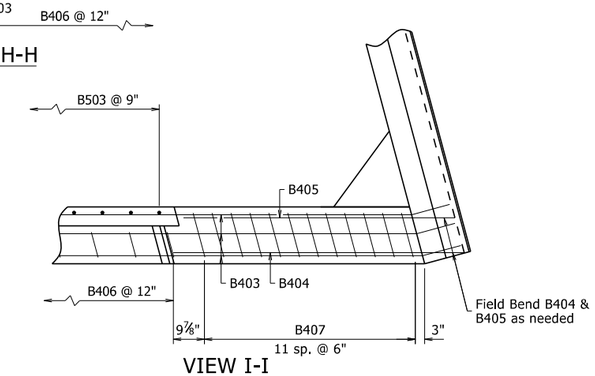

VIEW I-I

STATE OF ARKANSAS
LICENSED PROFESSIONAL ENGINEER
No. 9235
9/22/23
CHARLES R. ELLIS

BRIDGE ENGINEER

SHEET 3 OF 4
DETAILS OF END BENTS
HEARTSILL CREEK (SITE 4)

ROUTE SEC.

ARKANSAS STATE HIGHWAY COMMISSION

LITTLE ROCK, ARK.

DRAWN BY:	YG	DATE:	07/31/2023	FILENAME:	b040861x4_b1.dgn
CHECKED BY:	MCB	DATE:	8/30/2023	SCALE:	No Scale
DESIGNED BY:	PGT	DATE:	7/18/2023		

BRIDGE NO. 07644 DRAWING NO. 66916

PRINT DATE: 9/22/2023

DATE REVISED	DATE REVISED	FED. RD. DIST. NO.	STATE	JOB NO.	SHEET NO.	TOTAL SHEETS
		6	ARK.	040861	177	291
		07644 - END BENTS - 66917				

BAR LIST - PER BENT

MARK	NO. REQ'D	LENGTH	P.D.
B401	8	33'-0	Str.
B402	14	7'-0"	Str.
B403	32	33'-0"	2"
B404	1	9'-2"	2½"
B405	1	8'-7"	2½"
B406	60	8'-11"	2"
B407	12	15'-4"	2"
B408	6	7'-7"	Str.
B409	8	3'-2"	2"
B410	2	5'-4"	2"
B411	2	5'-6"	2"
B412	32	5'-11"	2"
B413	32	6'-3"	2"
B414	12	9'-8"	2"
B501	78	13'-3"	2½"
B502	16	8'-5"	2½"
B503	75	5'-8"	Str.
B504	16	"A"	3¾"
B505	16	"B"	3¾"
B601	12	34'-6"	4½"
B602	14	33'-6"	Str.
C401E	26	3'-7"	3"
C402E	4	12'-8"	Str.
F601	12	2'-8"	Str.
F602	24	11'-5"	4½"
(1) R401E	28	6'-4"	2½"
R402E	8	12'-8"	Str.
R404E	8	0'-8"	Str.
(1) W401E	28	3'-11"	3¾"
W402	20	16'-5"	2"
W403	20	16'-2"	2"
W701	68	12'-8"	Str.

BENDING DIAGRAMS

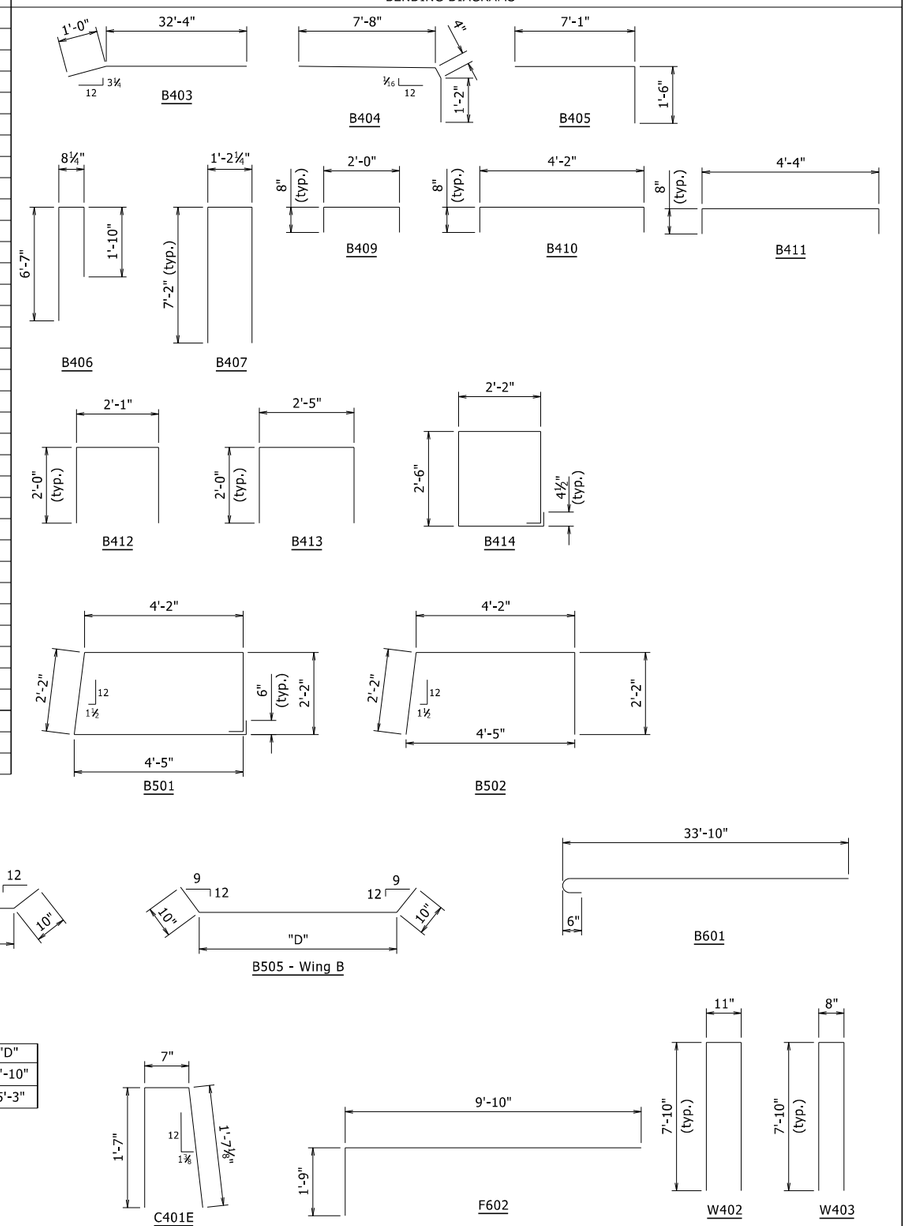

	"A"	"B"	"C"	"D"
Bent 1	8'-4"	6'-6"	6'-8"	4'-10"
Bent 6	7'-11"	6'-11"	6'-3"	5'-3"

Dimensions are out to out of bars.
Bars with an "E" suffix shall be epoxy coated.

(1) See Std. Dwg. No. 55070 for details of rail reinforcing and location of bars with an "R" prefix & W401E.

STATE OF ARKANSAS
LICENSED PROFESSIONAL ENGINEER
No. 9235
9/22/23
CHARLES R. ELLIS

BRIDGE ENGINEER

SHEET 4 OF 4
DETAILS OF END BENTS
HEARTSILL CREEK (SITE 4)

ROUTE SEC.

ARKANSAS STATE HIGHWAY COMMISSION

LITTLE ROCK, ARK.

DRAWN BY: YG DATE: 07/31/2023
CHECKED BY: MCB DATE: 8/30/2023
DESIGNED BY: PGT DATE: 7/18/2023
FILENAME: b040861x4_b1.dgn
SCALE: No Scale

BRIDGE NO. 07644 DRAWING NO. 66917

PRINT DATE: 9/22/2023

DATE REVISED	DATE REVISED	FED. RD. DIST. NO.	STATE	JOB NO.	SHEET NO.	TOTAL SHEETS
		6	ARK.	040861	178	291
		07644 - INTERMEDIATE BENTS - 66918				

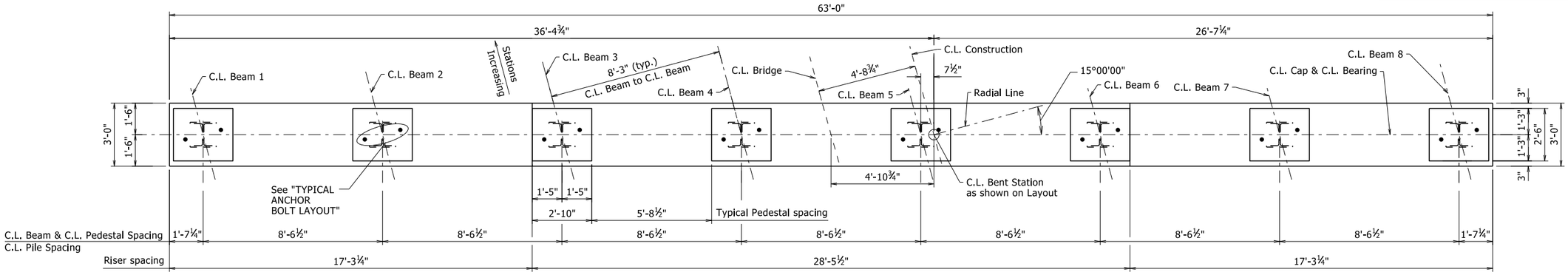

PLAN

⅜" = 1'-0"

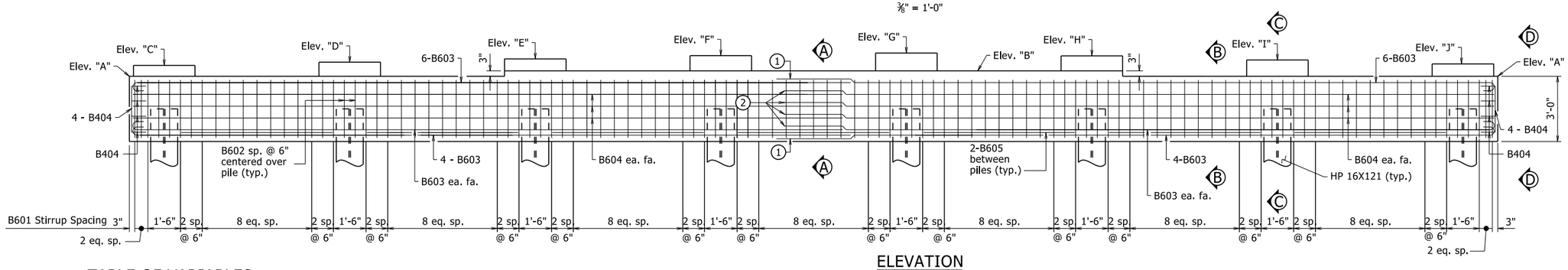

ELEVATION

LOOKING AHEAD

⅜" = 1'-0"

TABLE OF VARIABLES

Bent	Elev. "A"	Elev. "B"	Elev. "C"	Elev. "D"	Elev. "E"	Elev. "F"	Elev. "G"	Elev. "H"	Elev. "I"	Elev. "J"
2	492.24	492.49	492.74	492.89	493.04	493.19	493.31	493.17	492.99	492.80
3	492.51	492.76	493.01	493.17	493.32	493.48	493.62	493.49	493.32	493.15
4	492.73	492.98	493.23	493.39	493.55	493.71	493.85	493.72	493.55	493.38
5	492.96	493.21	493.46	493.62	493.77	493.93	494.07	493.94	493.77	493.60

BAR LIST-PER BENT

MARK	NO. REQ'D	LENGTH	P.D.
B401	32	6'-9"	2"
B402	40	6'-5"	2"
B403	9	9'-8"	2"
B404	16	3'-8"	2"
B601	97	11'-10"	4½"
B602	16	7'-8"	4½"
B603	24	33'-9"	4½"
B604	12	32'-8"	Str.
B605	14	7'-0"	Str.

BENDING DIAGRAMS

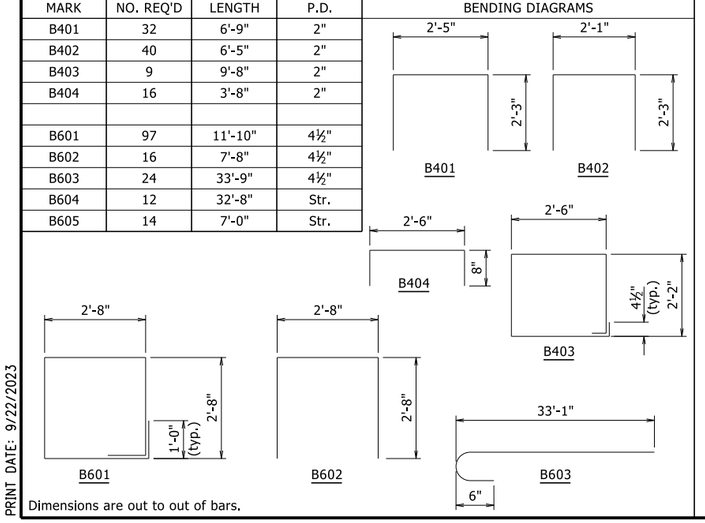

Dimensions are out to out of bars.

See Dwg. No. 66943 for "SECTION A-A", "SECTION B-B", "SECTION C-C", & "VIEW D-D".

(1) 3'-5" minimum lapped splice length

(2) 2'-8" minimum lapped splice length

(3) Pedestals shall be cast level at the elevations shown in "ELEVATION". See Dwg. No. 66943 for "PEDESTAL PLAN" & "TYPICAL PEDESTAL DETAILS".

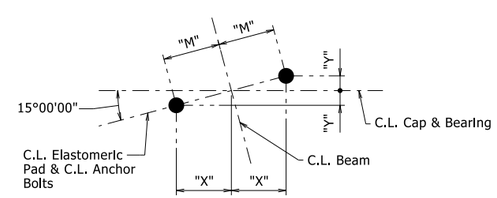

For Details of Elastomeric Bearings, see Dwg. No. 66945 & 66946.

TYPICAL ANCHOR BOLT LAYOUT

NO SCALE

Bent	"X"	"Y"	"M"
2	9⅞"	2⅝"	10¼"
3	10⅛"	2 11/16"	10½"
4	10⅛"	2 11/16"	10½"
5	9⅞"	2⅝"	10¼"

STATE OF ARKANSAS
LICENSED PROFESSIONAL ENGINEER
No. 9235
9/22/23
CHARLES R. ELLIS
BRIDGE ENGINEER

DETAILS OF INTERMEDIATE BENTS
HEARTSILL CREEK (SITE 4)

ROUTE SEC.

ARKANSAS STATE HIGHWAY COMMISSION

LITTLE ROCK, ARK.

DRAWN BY: RD DATE: 08/16/2023 FILENAME: b040861x4_b2.dgn
CHECKED BY: MCB DATE: 08/21/2023 SCALE: AS NOTED
DESIGNED BY: PGT DATE: 08/2023

BRIDGE NO. 07644 DRAWING NO. 66918

PRINT DATE: 9/22/2023

DATE REVISED	DATE REVISED	FED. RD. DIST. NO.	STATE	JOB NO.	SHEET NO.	TOTAL SHEETS
		6	ARK.	040861	179	291
		07644		- 345'-0" UNIT -	66919	

(1) Working Point to Gutterline.

(2) Tolerance: Minus = ¼";
Plus equal to the amount of slab thickening used to meet slab thickness tolerance. See "ADJUSTMENT FOR SLAB THICKNESS TOLERANCE" on Std. Dwg. No. 55007.

(3) See "ADJUSTMENT FOR SLAB THICKNESS TOLERANCE" on Std. Dwg. No. 55007.

(4) If permanent steel bridge deck forms are used, the Fabricator shall clip plates as necessary to accommodate the deck form supports.

(5) C.L. Const. on a 5° curve right up to Sta. 504+54.12.

Bar positions or clearances from the forms shall be maintained by means of stays, ties, hangers, or other approved devices per Subsection 804.06. Placement of slab bolsters or high-chairs with full-length lower runners directly on removable deck forms will not be allowed.

Class 2 Protective Surface Treatment shall be applied to the Roadway, Sidewalk (including curbing), and Shared Use Path Surfaces and the Roadway Face and Top of Concrete Bridge Rail in accordance with Section 803.

Class 3 Textured Coating Finish shall be applied to all areas as specified in Special Provision "TEXTURED COATING FINISH" and in accordance with Subsection 802.19(b)(3).

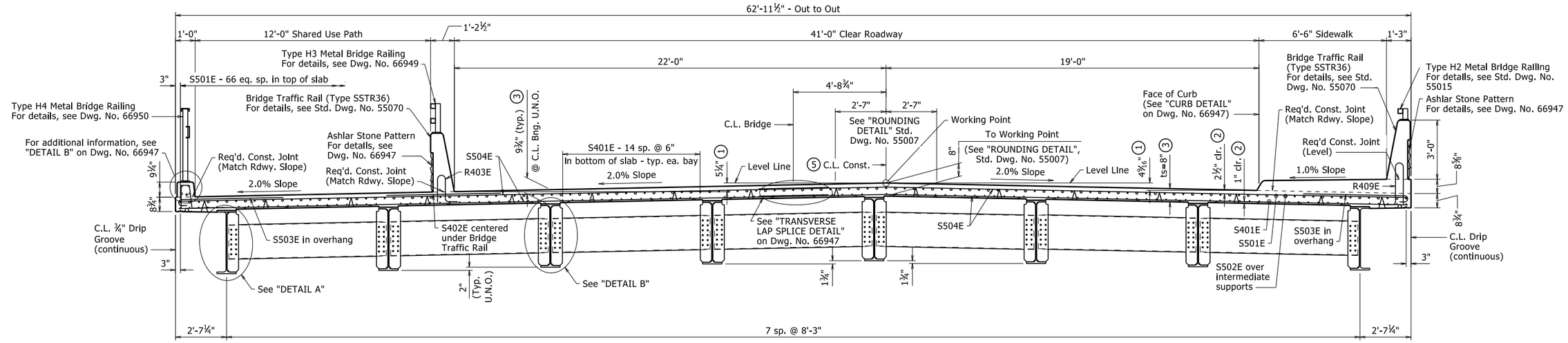

TYPICAL ROADWAY SECTION

Looking Ahead
⅜" = 1'-0"

Slab Reinforcing:

Longitudinal: S401E (Bottom) and S501E (Top) placed as shown
S502E placed as shown over intermediate supports, see "REINFORCING PLAN", Dwg. Nos. 66922 & 66923.

Transverse: S504E @ 6" o.c. in top and bottom,
S503E @ 6" in top of overhang (bundled with #5 bars)

Sidewalk Reinforcing:
Longitudinal: K401E in top as shown

Transverse: K402E & K403E @ 12" o.c.

EXPANSION DEVICE:
Rdwy. Channel - C15x33.9
Conn. ∠8"x4"x½"
Detail Device ⅛" high & provide ¼" shims using 2 - 1/16" and 1 - ⅛" PLs.

For details of poured silicone joint, see Std. Dwg. No. 55008.

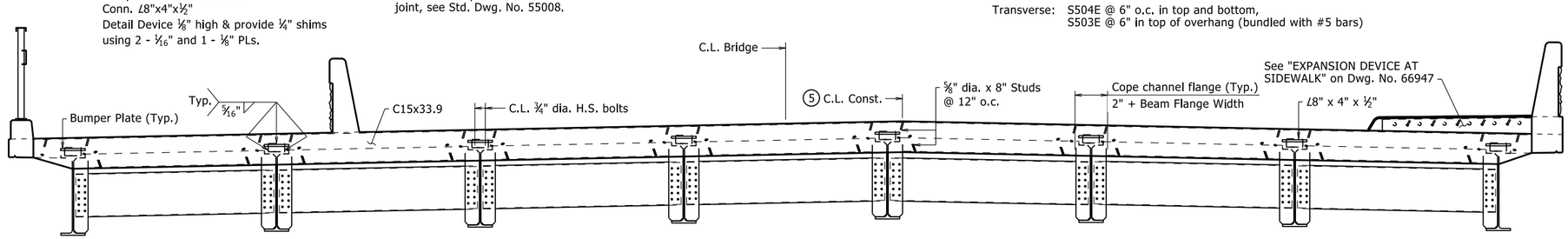

SECTION THRU JOINT

Looking Ahead
⅜" = 1'-0"

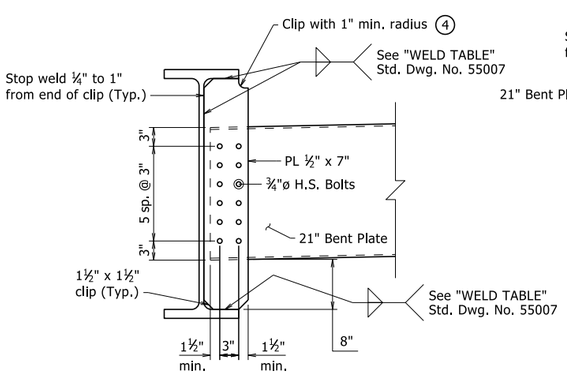

DETAIL A

1" = 1'-0"

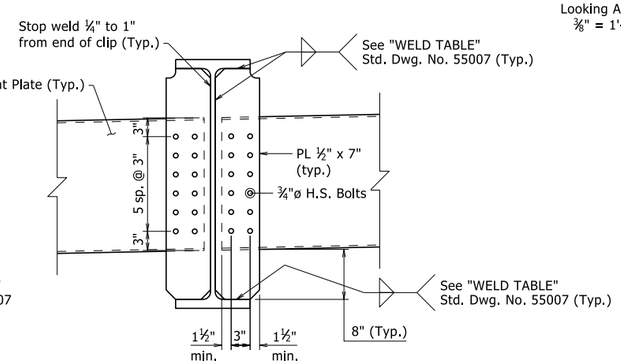

DETAIL B

1" = 1'-0"

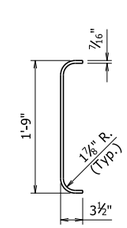

SECTION THRU DIAPHRAGM

1" = 1'-0"

Bolts in diaphragm connections shall be properly installed and tightened in accordance with Subsection 807.71.

STATE OF ARKANSAS
LICENSED PROFESSIONAL ENGINEER
No. 9235
9/22/23
CHARLES R. ELLIS
BRIDGE ENGINEER

SHEET 1 OF 6
DETAILS OF 345'-0"
CONTINUOUS W-BEAM UNIT
HEARTSILL CREEK (SITE 4)

ROUTE SEC.

ARKANSAS STATE HIGHWAY COMMISSION
LITTLE ROCK, ARK.

DRAWN BY: JCG DATE: 06/23/2023
CHECKED BY: WAC DATE: 07/05/2023
DESIGNED BY: JSQ DATE: 04/2023
FILENAME: b040861x4_s1.dgn
SCALE: As Noted

BRIDGE NO. 07644 DRAWING NO. 66919

PRINT DATE: 9/22/2023

DATE REVISED	DATE REVISED	FED. RD. DIST. NO.	STATE	JOB NO.	SHEET NO.	TOTAL SHEETS
		6	ARK.	040861	180	291
		07644		- 345'-0" UNIT -		66920

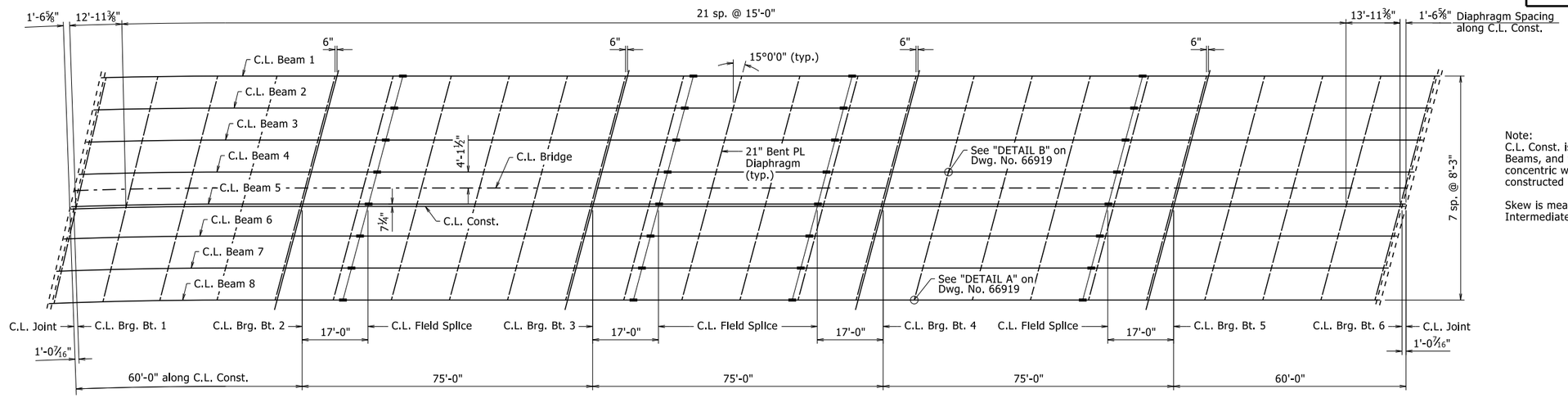

FRAMING PLAN

1/16" = 1'-0"

Note:
C.L. Const. is on a 5°00' curve right up to Sta. 504+45.12. C.L. Beams, and the longitudinal lines shall be constructed on curves concentric with C.L. Const. up to this station. Bent 1 shall be constructed along a line skewed from a radial line to C.L. Const.

Skew is measured at C.L. Joint for End Bents and at C.L. Bent for Intermediate Bents.

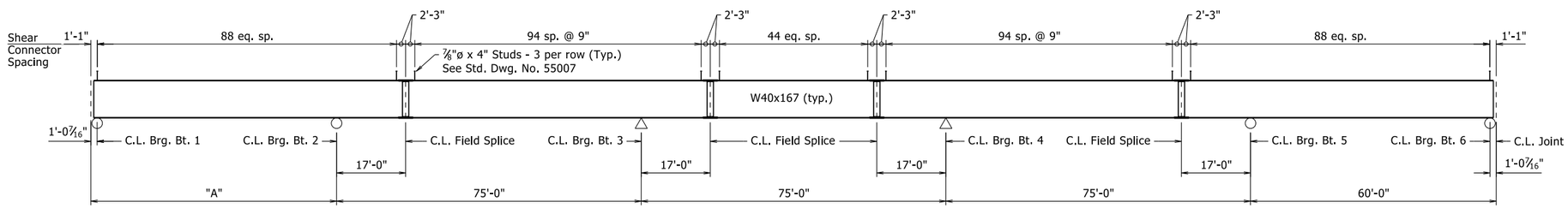

Beam No.	"A"
1	61'-2¼"
2	60'-10¹¹⁄₁₆"
3	60'-7³⁄₁₆"
4	60'-3¾"
5	60'-0¼"
6	59'-8¹³⁄₁₆"
7	59'-5⅜"
8	59'-1¹⁵⁄₁₆"

TYPICAL BEAM ELEVATION

No Scale

All structural steel shall be ASTM A709, Grade 50W unless otherwise noted and shall be paid for as "Structural Steel in Beam Spans (A709, Gr. 50W)". See Std. Dwg. Nos. 55006 and 55007 for additional notes and details.

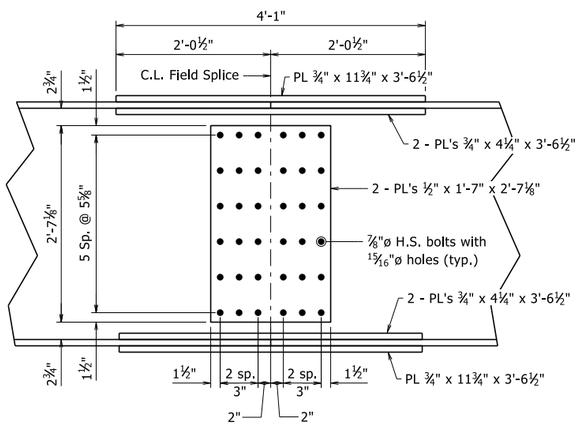

WEB SPLICE

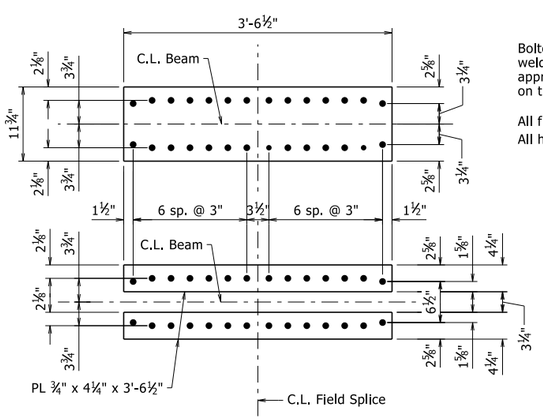

FLANGE SPLICE

FIELD SPLICE DETAIL

1" = 1'-0"

Bolted field splice bolts may be eliminated or shop welded splices may be substituted with the approval of the Engineer. Payment will be made on the basis of plan quantities.

All field splice bolts shall be ⅞"ø H.S. bolts.
All holes for splice bolts shall be ¹⁵⁄₁₆"ø.

STATE OF ARKANSAS
LICENSED PROFESSIONAL ENGINEER
No. 9235
9/22/23
CHARLES R. ELLIS

BRIDGE ENGINEER

SHEET 2 OF 6
DETAILS OF 345'-0"
CONTINUOUS W-BEAM UNIT
HEARTSILL CREEK (SITE 4)

ROUTE SEC.

ARKANSAS STATE HIGHWAY COMMISSION

LITTLE ROCK, ARK.

DRAWN BY: JCG DATE: 06/23/2023 FILENAME: b040861x4_s1.dgn
CHECKED BY: WAC DATE: 07/05/2023 SCALE: As Noted
DESIGNED BY: JSQ DATE: 04/2023

BRIDGE NO. 07644 DRAWING NO. 66920

PRINT DATE: 9/22/2023

DATE REVISED	DATE REVISED	FED. RD. DIST. NO.	STATE	JOB NO.	SHEET NO.	TOTAL SHEETS
		6	ARK.	040861	181	291
		07644		- 345'-0" UNIT -	66921	

TABLE OF DEAD LOAD DEFLECTIONS (INCHES)

Span	Point of Deflection	Beam No. 1			Beam No. 2			Beam No. 3			Beam No. 4			Beam No. 5			Beam No. 6			Beam No. 7			Beam No. 8		
		Structural Steel	Structural Steel + Slab	Structural Steel + Slab + Rail + Sldewalk	Structural Steel	Structural Steel + Slab	Structural Steel + Slab + Rail + Sldewalk	Structural Steel	Structural Steel + Slab	Structural Steel + Slab + Rail + Sldewalk	Structural Steel	Structural Steel + Slab	Structural Steel + Slab + Rail + Sldewalk	Structural Steel	Structural Steel + Slab	Structural Steel + Slab + Rail + Sldewalk	Structural Steel	Structural Steel + Slab	Structural Steel + Slab + Rail + Sldewalk	Structural Steel	Structural Steel + Slab	Structural Steel + Slab + Rail + Sldewalk	Structural Steel	Structural Steel + Slab	Structural Steel + Slab + Rail + Sldewalk
Support	0.0	0	0	0	0	0	0	0	0	0	0	0	0	0	0	0	0	0	0	0	0	0	0	0	0
1	0.1	0.020	0.109	0.140	0.022	0.130	0.145	0.024	0.143	0.154	0.024	0.145	0.155	0.024	0.147	0.156	0.025	0.153	0.162	0.025	0.148	0.158	0.026	0.143	0.158
	0.2	0.037	0.198	0.254	0.041	0.239	0.267	0.043	0.258	0.277	0.044	0.265	0.284	0.045	0.271	0.288	0.046	0.278	0.294	0.047	0.273	0.292	0.047	0.257	0.285
	0.3	0.048	0.260	0.334	0.054	0.315	0.351	0.057	0.341	0.366	0.058	0.350	0.375	0.059	0.358	0.381	0.061	0.367	0.389	0.062	0.361	0.386	0.062	0.337	0.373
	0.4	0.053	0.285	0.366	0.059	0.345	0.385	0.062	0.374	0.401	0.064	0.385	0.413	0.065	0.392	0.417	0.067	0.402	0.426	0.068	0.397	0.425	0.068	0.371	0.411
	0.5	0.050	0.270	0.347	0.056	0.329	0.367	0.059	0.356	0.382	0.061	0.367	0.393	0.062	0.375	0.399	0.064	0.384	0.407	0.065	0.380	0.407	0.066	0.357	0.395
	0.6	0.041	0.223	0.287	0.047	0.274	0.305	0.050	0.298	0.320	0.051	0.306	0.328	0.052	0.314	0.334	0.053	0.320	0.339	0.054	0.318	0.340	0.055	0.299	0.331
	0.7	0.029	0.156	0.201	0.033	0.193	0.214	0.035	0.211	0.226	0.036	0.217	0.233	0.037	0.223	0.237	0.038	0.229	0.243	0.039	0.229	0.245	0.039	0.212	0.235
	0.8	0.014	0.077	0.100	0.017	0.098	0.108	0.018	0.108	0.116	0.019	0.113	0.121	0.019	0.115	0.122	0.020	0.120	0.127	0.021	0.121	0.129	0.022	0.119	0.132
	0.9	0.003	0.017	0.022	0.004	0.024	0.026	0.005	0.028	0.030	0.005	0.029	0.031	0.005	0.031	0.033	0.005	0.032	0.034	0.006	0.034	0.036	0.006	0.033	0.037
Support	0.0	0	0	0	0	0	0	0	0	0	0	0	0	0	0	0	0	0	0	0	0	0	0	0	0
2	0.1	0.013	0.070	0.090	0.013	0.075	0.085	0.013	0.076	0.082	0.013	0.076	0.081	0.012	0.074	0.079	0.012	0.072	0.076	0.012	0.067	0.072	0.011	0.058	0.064
	0.2	0.036	0.197	0.253	0.037	0.215	0.243	0.037	0.221	0.239	0.037	0.220	0.236	0.036	0.218	0.232	0.036	0.214	0.227	0.035	0.201	0.215	0.032	0.175	0.194
	0.3	0.060	0.326	0.418	0.062	0.358	0.404	0.062	0.370	0.399	0.062	0.371	0.397	0.061	0.368	0.391	0.061	0.363	0.385	0.059	0.342	0.366	0.056	0.302	0.335
	0.4	0.077	0.418	0.536	0.079	0.460	0.519	0.080	0.477	0.514	0.080	0.478	0.512	0.079	0.475	0.505	0.078	0.467	0.495	0.076	0.443	0.475	0.072	0.391	0.433
	0.5	0.083	0.449	0.576	0.085	0.495	0.559	0.086	0.514	0.554	0.086	0.515	0.552	0.085	0.512	0.545	0.085	0.506	0.537	0.082	0.479	0.513	0.078	0.424	0.470
	0.6	0.076	0.412	0.529	0.078	0.454	0.512	0.079	0.472	0.509	0.079	0.474	0.508	0.079	0.472	0.502	0.078	0.465	0.493	0.076	0.441	0.472	0.072	0.391	0.433
	0.7	0.058	0.315	0.404	0.060	0.348	0.392	0.061	0.362	0.390	0.060	0.362	0.388	0.060	0.360	0.383	0.060	0.356	0.377	0.058	0.337	0.361	0.055	0.299	0.331
	0.8	0.034	0.185	0.238	0.035	0.204	0.230	0.035	0.211	0.228	0.035	0.212	0.227	0.035	0.211	0.224	0.035	0.208	0.221	0.034	0.198	0.212	0.032	0.174	0.193
	0.9	0.011	0.060	0.077	0.011	0.066	0.074	0.011	0.068	0.073	0.011	0.068	0.073	0.011	0.067	0.071	0.011	0.066	0.070	0.011	0.063	0.067	0.010	0.055	0.061
Support	0.0	0	0	0	0	0	0	0	0	0	0	0	0	0	0	0	0	0	0	0	0	0	0	0	0
3	0.1	0.009	0.048	0.062	0.010	0.056	0.063	0.010	0.059	0.063	0.010	0.060	0.064	0.010	0.060	0.064	0.010	0.061	0.065	0.010	0.059	0.063	0.010	0.053	0.059
	0.2	0.030	0.161	0.207	0.031	0.182	0.204	0.032	0.192	0.207	0.032	0.194	0.208	0.032	0.194	0.206	0.032	0.194	0.206	0.032	0.187	0.200	0.031	0.167	0.185
	0.3	0.052	0.282	0.363	0.055	0.319	0.358	0.056	0.334	0.359	0.056	0.338	0.362	0.056	0.339	0.361	0.056	0.337	0.357	0.056	0.324	0.347	0.054	0.291	0.322
	0.4	0.068	0.370	0.476	0.072	0.417	0.469	0.073	0.438	0.471	0.074	0.443	0.474	0.074	0.443	0.471	0.074	0.441	0.468	0.073	0.423	0.453	0.070	0.379	0.420
	0.5	0.074	0.402	0.517	0.078	0.453	0.509	0.080	0.476	0.512	0.080	0.480	0.514	0.080	0.481	0.512	0.080	0.479	0.508	0.079	0.459	0.492	0.076	0.411	0.455
	0.6	0.069	0.371	0.477	0.072	0.418	0.470	0.073	0.438	0.471	0.074	0.442	0.473	0.074	0.443	0.471	0.074	0.441	0.468	0.072	0.421	0.451	0.070	0.378	0.419
	0.7	0.052	0.282	0.363	0.055	0.319	0.358	0.056	0.334	0.359	0.056	0.336	0.360	0.056	0.337	0.359	0.056	0.335	0.355	0.055	0.321	0.344	0.053	0.287	0.318
	0.8	0.030	0.162	0.209	0.031	0.183	0.205	0.032	0.192	0.206	0.032	0.193	0.207	0.032	0.194	0.206	0.032	0.193	0.205	0.032	0.186	0.199	0.031	0.166	0.184
	0.9	0.009	0.049	0.064	0.010	0.056	0.063	0.010	0.059	0.063	0.010	0.059	0.063	0.010	0.059	0.063	0.010	0.059	0.063	0.010	0.057	0.061	0.009	0.050	0.055
Support	0.0	0	0	0	0	0	0	0	0	0	0	0	0	0	0	0	0	0	0	0	0	0	0	0	0
4	0.1	0.011	0.059	0.076	0.011	0.066	0.074	0.012	0.070	0.076	0.012	0.070	0.075	0.012	0.070	0.074	0.012	0.070	0.074	0.011	0.066	0.071	0.011	0.059	0.065
	0.2	0.033	0.181	0.232	0.035	0.203	0.229	0.035	0.211	0.228	0.036	0.214	0.229	0.035	0.212	0.226	0.035	0.211	0.224	0.035	0.202	0.216	0.033	0.180	0.199
	0.3	0.057	0.310	0.398	0.060	0.347	0.391	0.061	0.363	0.391	0.061	0.366	0.392	0.061	0.366	0.389	0.061	0.363	0.385	0.060	0.347	0.372	0.057	0.311	0.344
	0.4	0.075	0.405	0.519	0.078	0.452	0.510	0.079	0.473	0.510	0.079	0.476	0.510	0.079	0.476	0.506	0.079	0.472	0.500	0.078	0.452	0.484	0.075	0.405	0.448
	0.5	0.081	0.440	0.564	0.085	0.492	0.555	0.086	0.515	0.555	0.086	0.519	0.556	0.086	0.518	0.551	0.086	0.514	0.545	0.085	0.492	0.527	0.081	0.441	0.488
	0.6	0.075	0.409	0.525	0.079	0.457	0.083	0.080	0.478	0.515	0.080	0.482	0.516	0.080	0.482	0.513	0.080	0.478	0.507	0.079	0.457	0.490	0.075	0.409	0.453
	0.7	0.059	0.318	0.408	0.061	0.355	0.400	0.062	0.371	0.400	0.062	0.374	0.400	0.062	0.373	0.397	0.062	0.370	0.392	0.061	0.354	0.379	0.058	0.317	0.351
	0.8	0.035	0.190	0.244	0.037	0.213	0.240	0.037	0.222	0.239	0.037	0.224	0.240	0.037	0.224	0.238	0.037	0.222	0.235	0.037	0.213	0.228	0.035	0.190	0.210
	0.9	0.012	0.066	0.085	0.013	0.073	0.082	0.013	0.077	0.083	0.013	0.077	0.082	0.013	0.077	0.082	0.013	0.076	0.081	0.012	0.072	0.077	0.012	0.065	0.072
Support	0.0	0	0	0	0	0	0	0	0	0	0	0	0	0	0	0	0	0	0	0	0	0	0	0	0
5	0.1	0.004	0.022	0.029	0.004	0.026	0.029	0.004	0.027	0.029	0.004	0.027	0.029	0.005	0.028	0.030	0.005	0.028	0.030	0.005	0.027	0.029	0.004	0.023	0.026
	0.2	0.017	0.090	0.116	0.017	0.102	0.114	0.018	0.107	0.115	0.018	0.107	0.115	0.018	0.107	0.114	0.018	0.108	0.114	0.018	0.104	0.111	0.017	0.091	0.101
	0.3	0.032	0.171	0.221	0.033	0.194	0.217	0.034	0.203	0.218	0.034	0.203	0.218	0.034	0.203	0.216	0.034	0.203	0.215	0.033	0.194	0.207	0.032	0.172	0.191
	0.4	0.046	0.247	0.319	0.048	0.280	0.314	0.049	0.293	0.315	0.049	0.294	0.316	0.049	0.294	0.313	0.049	0.293	0.310	0.048	0.281	0.301	0.046	0.249	0.276
	0.5	0.055	0.296	0.382	0.057	0.335	0.375	0.058	0.350	0.377	0.058	0.351	0.377	0.058	0.351	0.374	0.058	0.350	0.371	0.057	0.335	0.358	0.055	0.298	0.331
	0.6	0.057	0.310	0.400	0.060	0.351	0.393	0.061	0.367	0.395	0.061	0.368	0.395	0.061	0.369	0.393	0.061	0.367	0.389	0.060	0.352	0.377	0.058	0.313	0.347
	0.7	0.052	0.283	0.365	0.055	0.321	0.360	0.056	0.335	0.360	0.056	0.337	0.362	0.056	0.337	0.359	0.056	0.335	0.355	0.055	0.321	0.343	0.053	0.285	0.316
	0.8	0.040	0.217	0.280	0.042	0.246	0.276	0.043	0.257	0.277	0.043	0.258	0.277	0.043	0.258	0.275	0.043	0.257	0.272	0.042	0.246	0.263	0.040	0.219	0.243
	0.9	0.022	0.118	0.152	0.023	0.134	0.150	0.023	0.139	0.150	0.023	0.139	0.149	0.023	0.139	0.148	0.023	0.139	0.147	0.023	0.133	0.142	0.022	0.118	0.131
Support	0.0	0	0	0	0	0	0	0	0	0	0	0	0	0	0	0	0	0	0	0	0	0	0	0	0

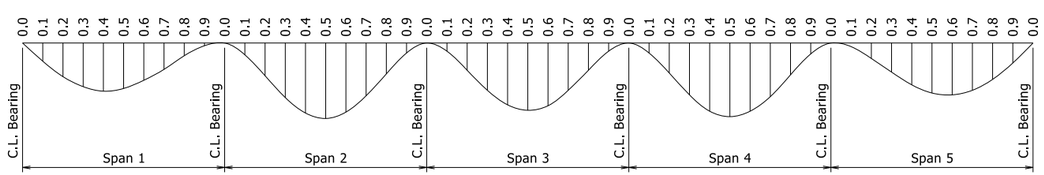

DEAD LOAD DEFLECTION DIAGRAM

No Scale

Camber for Dead Load Deflection ± ¼" tolerance. Deflections shown are along C.L. Beam from a plane perpendicular to the web extending from C.L. Bearing to C.L. Bearing. Vertical curve corrections not included. Negative sign (-) indicates point above chord.

STATE OF ARKANSAS
LICENSED PROFESSIONAL ENGINEER
No. 9235
9/22/23
CHARLES R. ELLIS

BRIDGE ENGINEER

SHEET 3 OF 6
DETAILS OF 345'-0"
CONTINUOUS W-BEAM UNIT
HEARTSILL CREEK (SITE 4)

ROUTE SEC.

ARKANSAS STATE HIGHWAY COMMISSION

LITTLE ROCK, ARK.

DRAWN BY: JCG DATE: 06/23/2023
CHECKED BY: WAC DATE: 07/05/2023
DESIGNED BY: JSQ DATE: 04/2023
FILENAME: b040861x4_s1.dgn
SCALE: As Noted

BRIDGE NO. 07644 DRAWING NO. 66921

PRINT DATE: 9/22/2023

DATE REVISED	DATE REVISED	FED. RD. DIST. NO.	STATE	JOB NO.	SHEET NO.	TOTAL SHEETS
		6	ARK.	040861	182	291
		07644		- 345'-0" UNIT -	66922	

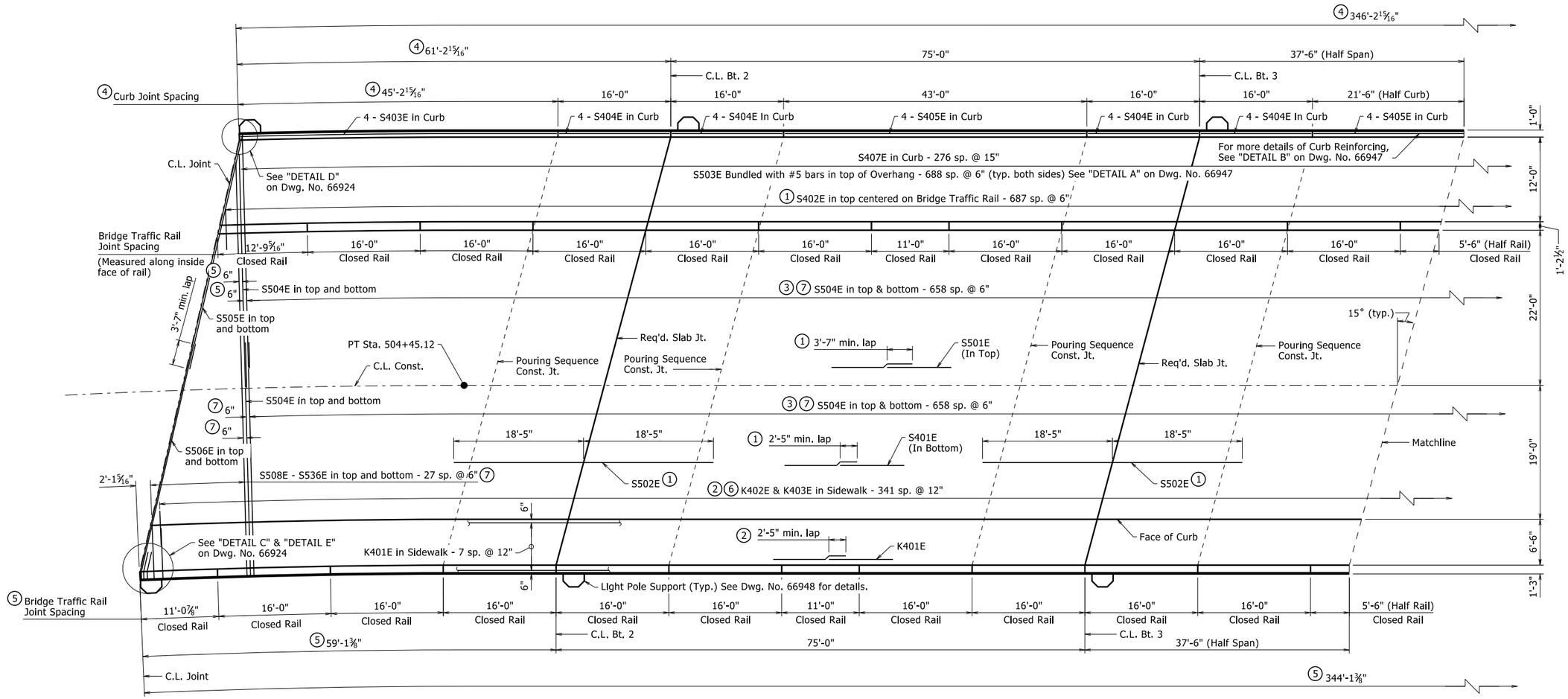

REINFORCING PLAN

1/8" = 1'-0"

(1) Placed as shown in "TYPICAL ROADWAY SECTION", Dwg. No. 66919

(2) Placed as shown in "SIDEWALK DETAIL", Dwg. No. 66947

(3) Placed as shown in "TRANSVERSE LAP SPLICE DETAIL SITES 4 & 5", Dwg. No. 66947

(4) Measured along inside face of Left curb.

(5) Measured along inside face of Right rail.

(6) Measured along Face of Curb.

(7) Measured along C.L. Const.

For additional details of Bridge Traffic Rail, see Std. Dwg. No. 55070.

For Bar List, see Dwg. No. 66924.

C.L. Construction is on a 5°00' curve right up to Sta. 504+45.12. C.L. Beams and all longitudinal reinforcing steel shall be place on curves concentric with C.L. Construction up to this station. All transverse reinforcing steel shall be placed on radial lines.

Skew is measured at C.L. Joint for End Bents and at C.L. Bent for Intermediate Bents. At Bent 1, skew is measured from a Radial line at C.L. Const. to C.L. Joint.

LIGHT POLE SUPPORT LOCATIONS

Looking Ahead Station
Station measured along C.L. Const. at C.L. Support

Left Side	Right Side
504+76.93	504+60.67
505+51.93	505+35.67
506+26.93	506+10.67
507+01.93	506+85.67

STATE OF ARKANSAS
LICENSED PROFESSIONAL ENGINEER
No. 9235
9/22/23
CHARLES R. ELLIS

BRIDGE ENGINEER

SHEET 4 OF 6
DETAILS OF 345'-0"
CONTINUOUS W-BEAM UNIT
HEARTSILL CREEK (SITE 4)

ROUTE SEC.

ARKANSAS STATE HIGHWAY COMMISSION

LITTLE ROCK, ARK.

DRAWN BY: JCG DATE: 06/23/2023
CHECKED BY: WAC DATE: 07/05/2023
DESIGNED BY: JSQ DATE: 04/2023
FILENAME: b040861x4_s1.dgn
SCALE: As Noted

BRIDGE NO. 07644 DRAWING NO. 66922

PRINT DATE: 9/22/2023

DATE REVISED	DATE REVISED	FED. RD. DIST. NO.	STATE	JOB NO.	SHEET NO.	TOTAL SHEETS
		6	ARK.	040861	183	291
		07644		- 345'-0" UNIT -	66923	

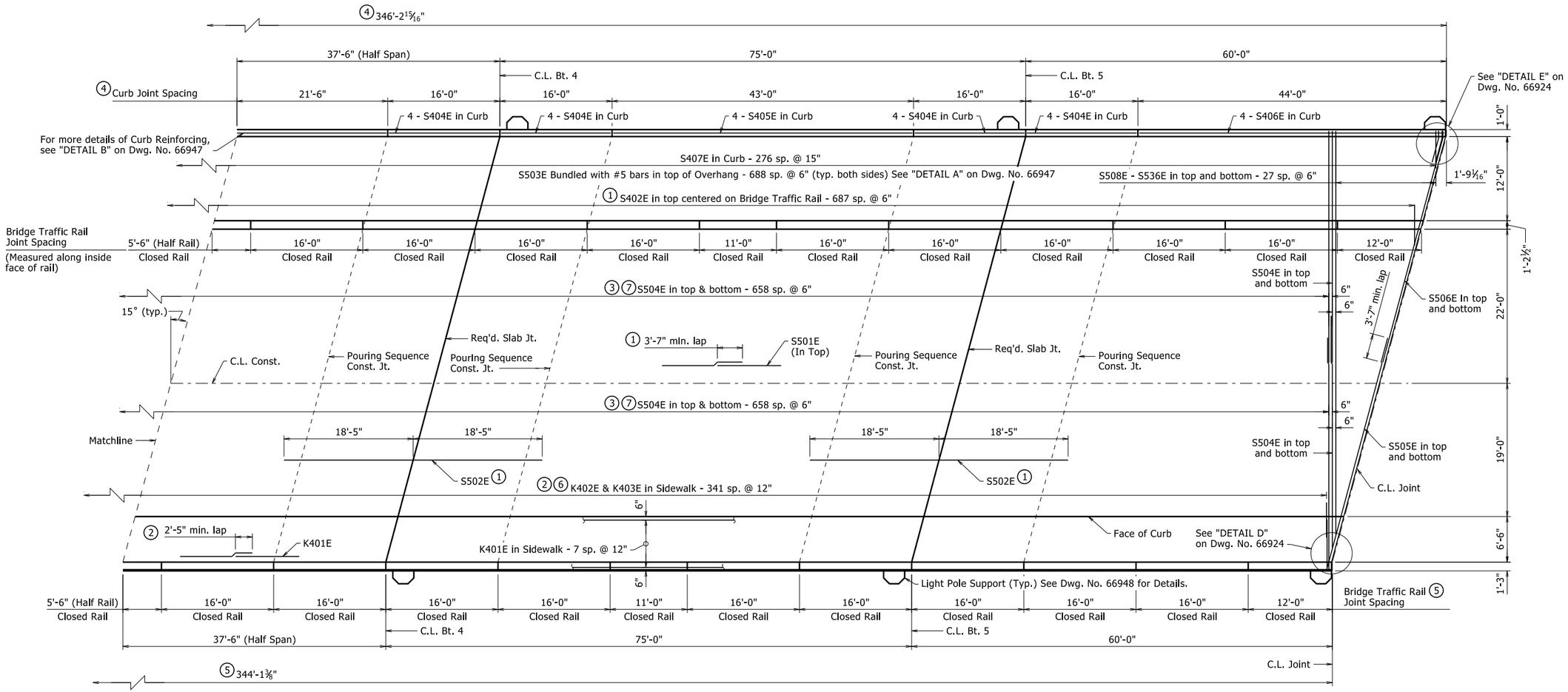

REINFORCING PLAN

1/8" = 1'-0"

① Placed as shown in "TYPICAL ROADWAY SECTION", Dwg. No. 66919.

② Placed as shown in "SIDEWALK DETAIL", Dwg. No. 66947.

③ Placed as shown in "TRANSVERSE LAP SPLICE DETAIL SITES 4 & 5", Dwg. No. 66947.

④ Measured along inside face of Left curb.

⑤ Measured along Inside face of RIght rail.

⑥ Measured along Face of Curb.

⑦ Measured along C.L. Const.

For additional details of Bridge Traffic Rail, see Std. Dwg. No. 55070.

For Bar List, see Dwg. No. 66924.

C.L. Construction is on a 5°00' curve right up to Sta. 504+45.12. C.L. Beams and all longitudinal reinforcing steel shall be place on curves concentric with C.L. Construction up to this station. All transverse

STATE OF ARKANSAS
LICENSED PROFESSIONAL ENGINEER
No. 9235
9/22/23
CHARLES R. ELLIS

BRIDGE ENGINEER

SHEET 5 OF 6
DETAILS OF 345'-0"
CONTINUOUS W-BEAM UNIT
HEARTSILL CREEK (SITE 4)

ROUTE SEC.

ARKANSAS STATE HIGHWAY COMMISSION

LITTLE ROCK, ARK.

DRAWN BY:	JCG	DATE: 06/23/2023	FILENAME:	b040861x4_s1.dgn	
CHECKED BY:	WAC	DATE: 07/05/2023	SCALE:	As Noted	
DESIGNED BY:	JSQ	DATE: 04/2023			

BRIDGE NO. 07644 DRAWING NO. 66923

PRINT DATE: 9/22/2023

DATE REVISED	DATE REVISED	FED. RD. DIST. NO.	STATE	JOB NO.	SHEET NO.	TOTAL SHEETS
		6	ARK.	040861	184	291
		07644		- 345'-0" UNIT -	66924	

TABLE OF VARIABLES
BRIDGE TRAFFIC RAILING (TYPE SSTR36)

Closed Rail Panels		
Panel Length	"A"	R4XXE Bar
11'-0"	21	R404E
11'-0⅞"	21	R405E
12'-0"	23	R406E
12'-9 5/16"	25	R407E
16'-0"	31	R408E

See Std. Dwg. No. 55070 for additional information.

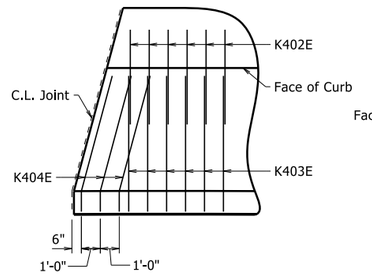

DETAIL C
(SIDEWALK)
¼" = 1'-0"

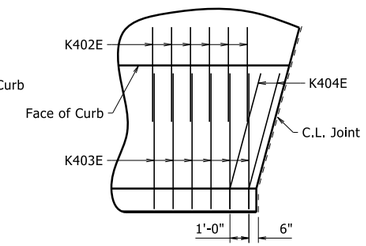

DETAIL D
(SIDEWALK)
¼" = 1'-0"

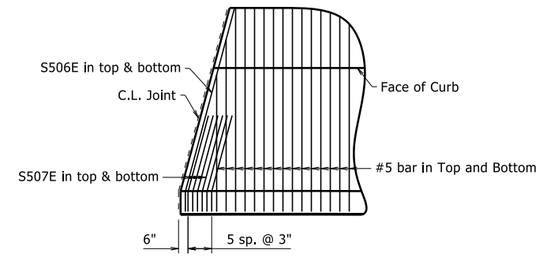

DETAIL E
(SLAB)
¼" = 1'-0"

BAR LIST

MARK	NO. REQ'D.	LENGTH	P.D.
S401E	1035	40'-8"	Str.
S402E	688	5'-9"	Str.
S403E	4	44'-10"	Str.
S404E	32	15'-8"	Str.
S405E	12	42'-8"	Str.
S406E	4	43'-8"	Str.
S407E	277	4'-2"	2"
S501E	469	52'-7"	Str.
S502E	264	36'-10"	Str.
S503E	1376	5'-11"	3¾"
S504E	1322	33'-2"	Str.
S505E	4	34'-3"	Str.
(1) S506E	4	34'-6"	3¾"
(1) S507E	20	5'-9"	3¾"
S508E-S536E	4 ea.	7'-7"-58'-8"	Str.
K401E	72	40'-8"	Str.
K402E	342	5'-6"	3"
K403E	342	7'-2"	Str.
K404E	5	7'-5"	3"
(1)(2) R401E	1380	6'-4"	2½", 3"
R402E	144	5'-6"	Str.
(2) R403E	690	3'-6"	3", 3¾"
R404E	48	10'-8"	Str.
R405E	8	10'-9"	Str.
R406E	16	11'-8"	Str.
R407E	8	12'-5"	Str.
R408E	288	15'-8"	Str.
(3) R409E	690	5'-1"	3", 3¾"
L401E	48	7'-4"	3"
L402E	24	4'-10"	3"
L403E	24	1'-9"	3"
L701E	30	11'-6"	5¼"
L702E	30	10'-10"	5¼"

BENDING DIAGRAMS

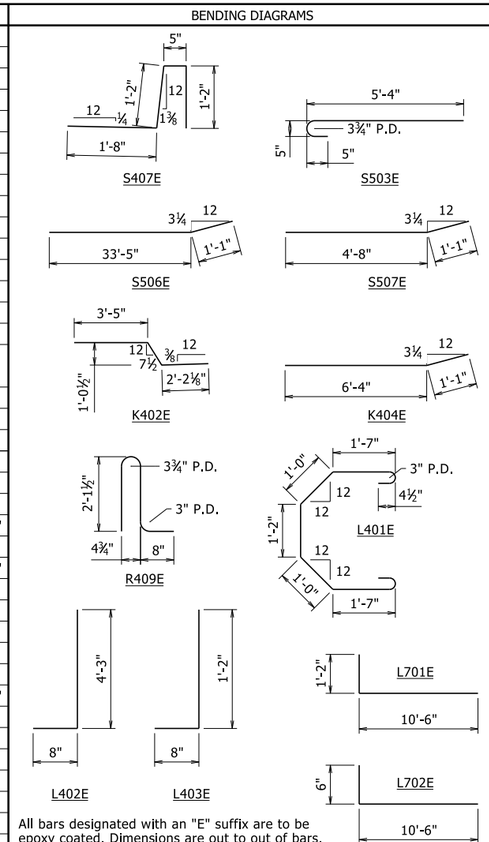

All bars designated with an "E" suffix are to be epoxy coated. Dimensions are out to out of bars.

(1) Trim in field as needed.
(2) See Std. Dwg. No. 55070 for additional details.
(3) Adjust bars to fit in railing adjacent to Shared Use Path near Full-Depth Rail Joints

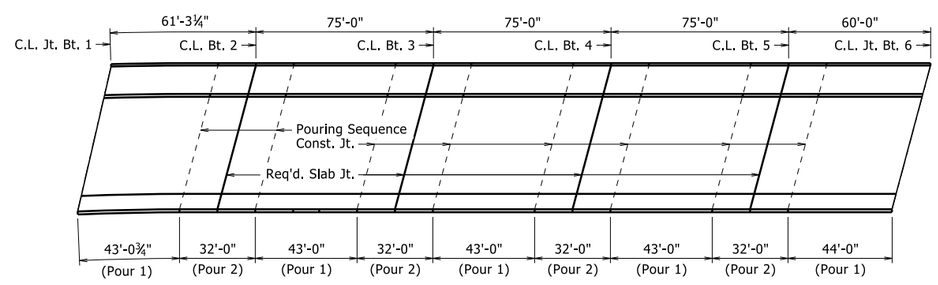

SLAB POURING SEQUENCE
1/32" = 1'-0"

Slab Pouring Sequence Notes:
Pours with the same number may be placed simultaneously or separately. All Pours (1) must be placed before Pours (2). 48 hours shall elapse between the end of a pour and the start of the next pour. 72 hours shall elapse between adjacent pours.

Concrete in bridge superstructure shall be placed, consolidated and screeded off for the entire pour before any concrete has taken its initial set. This may require the use of a retarding agent.

A minimum of 72 hours shall elapse between completion of the slab and the pouring of the sidewalk. A minimum of 72 hours shall elapse between the completion of the sidewalk and pouring of the bridge rail. Any railing or sidewalk pours made before the entire slab unit has been placed must be approved by the Engineer. The Contractor must obtain approval from the Engineer for any deviations from the pouring sequence(s) shown.

Required slab joints and pouring sequence construction joints shall align with bridge traffic rail joints at the face of the rail and curb joints at the face of the curb.

STATE OF ARKANSAS
LICENSED PROFESSIONAL ENGINEER
No. 9235
9/22/23
CHARLES R. ELLIS
BRIDGE ENGINEER

SHEET 6 OF 6
DETAILS OF 345'-0"
CONTINUOUS W-BEAM UNIT
HEARTSILL CREEK (SITE 4)

ROUTE SEC.
ARKANSAS STATE HIGHWAY COMMISSION
LITTLE ROCK, ARK.

DRAWN BY: JCG DATE: 06/23/2023
CHECKED BY: WAC DATE: 07/05/2023
DESIGNED BY: JSQ DATE: 04/2023
FILENAME: b040861x4_s1.dgn
SCALE: As Noted

BRIDGE NO. 07644 DRAWING NO. 66924

PRINT DATE: 9/22/2023

DATE REVISED	DATE REVISED	FED. RD. DIST. NO.	STATE	JOB NO.	SHEET NO.	TOTAL SHEETS
		6	ARK.	040861	185	291
		07645		- LAYOUT -		66925

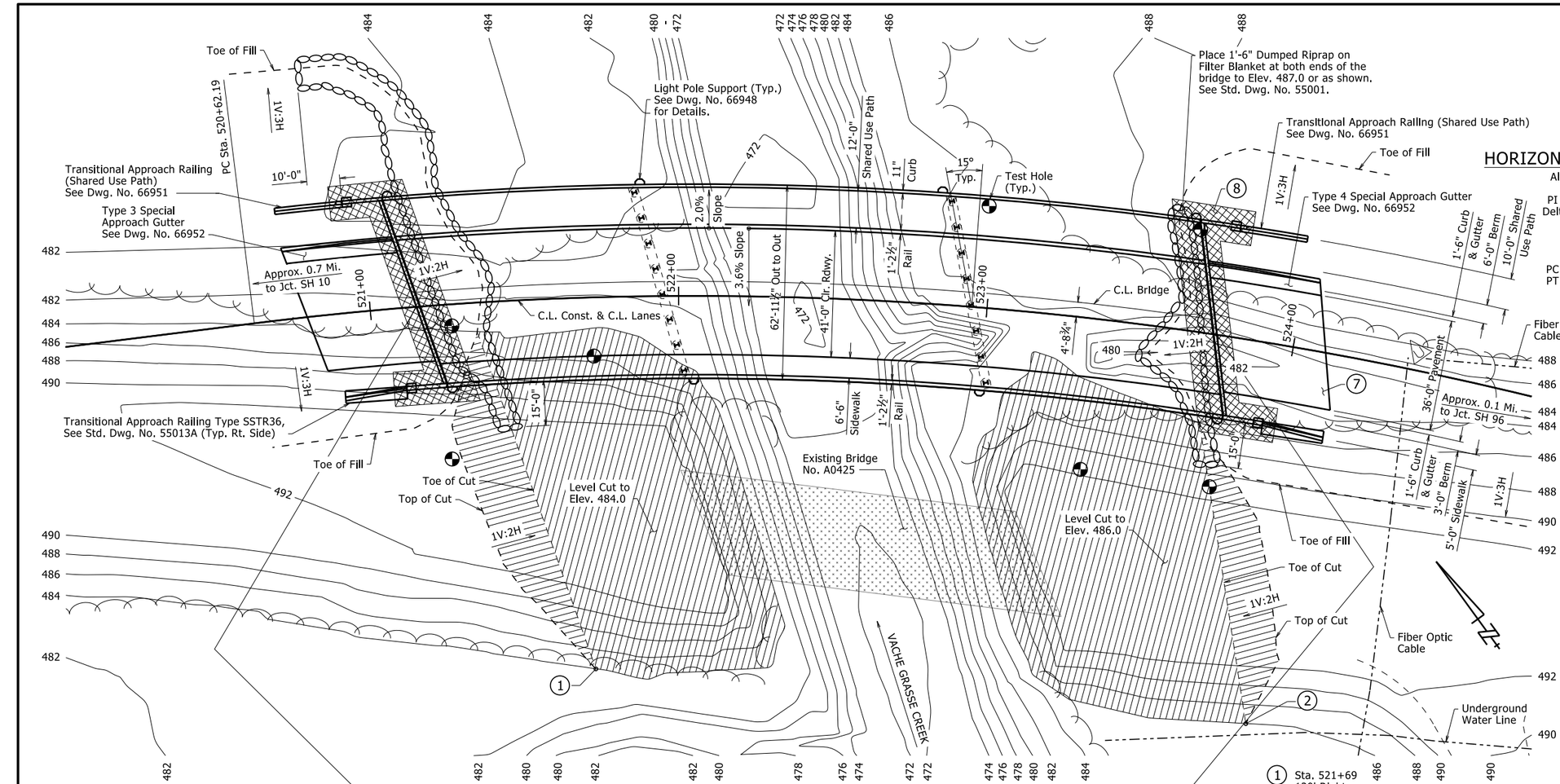

HORIZONTAL CURVE DATA

Along C.L. Const.

PI Sta. 523+28.35
Delta=26°09'08" Rt.
D=5°00'00"
L=523.05'
T=266.16'
R=1145.92'
PC Sta. 520+62.19
PT Sta. 525+85.23

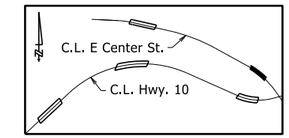

LOCATION SKETCH

No Scale

For R/W Data, see Roadway Plans.

The Contractor shall excavate the existing embankment at the beginning of bridge to Elev. 484.0 and at the end of bridge to Elev. 486.0. Approx. 2,935 cu. yds. of excavation.

C.L. Construction is on a 5°00' curve right. C.L. Girders, and the longitudinal lines of the bridge, approach slabs and gutters, and transitional approach railing shall be constructed on curves concentric to C.L. Construction. Bents shall be constructed along lines skewed from radial lines to C.L. Bridge and C.L. Construction. Skew is measured at C.L. Joint for End Bents and C.L. Bent for Intermediate Bents.

(7) Type F Approach Slabs (width = 36'-0") at both ends of bridge. See Std. Dwg. No. 55040F1.

(8) Aggregate Base Course (Class 7) at both ends of bridge. See "DETAIL A" on Dwg. No. 66873.

(1) Sta. 521+69 120' Right

(2) Sta. 524+06 123' Right

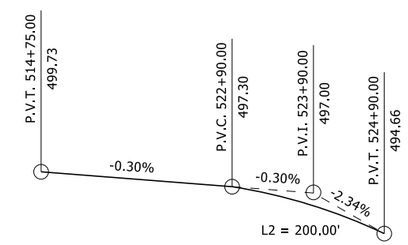

VERTICAL ALIGNMENT DATA

Along C.L. Const.
No Scale

(3) Dimension measured from top of deck at C.L. Bridge to low steel.

(4) Low Steel Elev. 491.59 occurs at Sta. 523+80.28, 24'-1¾" Right of C.L. Const.

(5) Top of Deck at C.L. Const. and C.L. Bent to Low Side Top of Cap = 6'-4 1/16"

(6) Ashlar Stone Pattern, see Special Provision "Architectural Finish" and Dwg. Nos. 66940, 66945, 66951, & 66952.

Stations shown are along C.L. Construction. Elevations shown are actual top of deck elevations at C.L. Construction. Any vertical dimension referenced to Top of Deck at C.L. Construction is based on actual top of deck elevation at C.L. Construction.

See "SUPERELEVATION TRANSITION SKETCH" on Dwg. No. 66927.

ELEVATION

For General Notes, see Dwg. No. 66873.

For Hydraulic Data, see Dwg. No. 66927.

For Soil Borings, see Dwg. Nos. 66926 & 66927.

STATE OF ARKANSAS
LICENSED PROFESSIONAL ENGINEER
No. 9235
9/22/23
CHARLES R. ELLIS
BRIDGE ENGINEER

SHEET 1 OF 3
LAYOUT OF BRIDGE
HIGHWAY 10 OVER VACHE GRASSE CREEK (SITE 5)
HWY. 10 - HWY. 96 (GREENWOOD BYPASS) (S)
SEBASTIAN COUNTY

ROUTE 10 SEC. 1

ARKANSAS STATE HIGHWAY COMMISSION

LITTLE ROCK, ARK.

DRAWN BY: JCG	DATE: 12/2/2022	FILENAME: b040861x5_L1.dgn	
CHECKED BY: JYP	DATE: 12/20/2022	SCALE: 1" = 20' or As Noted	
DESIGNED BY: CNL	DATE: 7/1/2022		

BRIDGE NO. 07645 DRAWING NO. 66925

PRINT DATE: 9/22/2023

DATE REVISED	DATE REVISED	FED. RD. DIST. NO.	STATE	JOB NO.	SHEET NO.	TOTAL SHEETS
		6	ARK.	040861	186	291
		07645		- LAYOUT -		66926

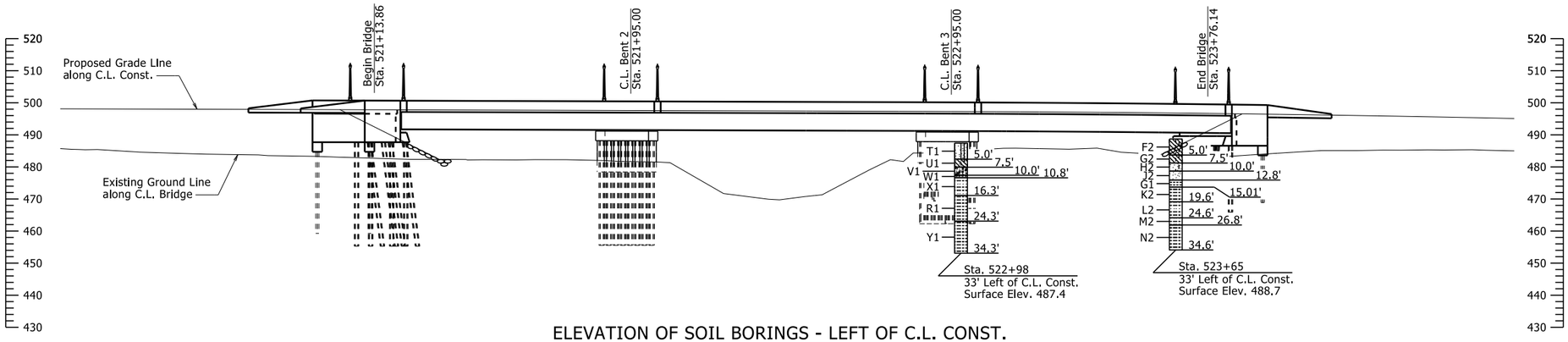

ELEVATION OF SOIL BORINGS - LEFT OF C.L. CONST.

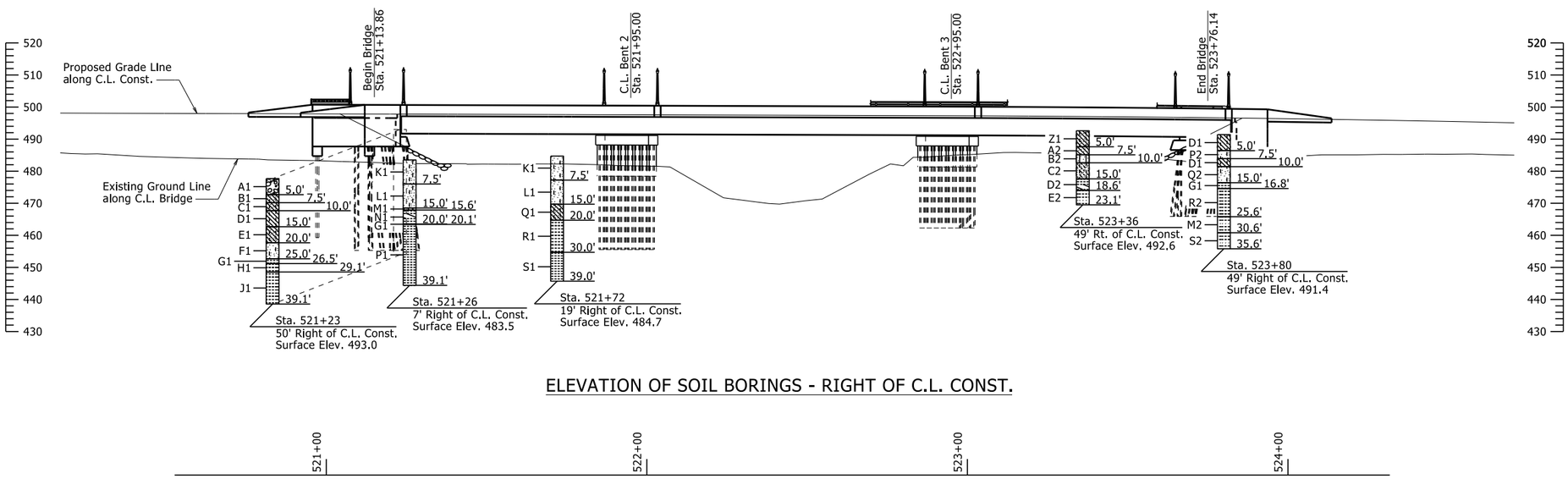

ELEVATION OF SOIL BORINGS - RIGHT OF C.L. CONST.

For Boring Legend and "N" Values, see Dwg. No. 66927.

STATE OF ARKANSAS
LICENSED PROFESSIONAL ENGINEER
No. 9235
9/22/23
CHARLES R. ELLIS

BRIDGE ENGINEER

SHEET 2 OF 3
LAYOUT OF BRIDGE
HIGHWAY 10 OVER VACHE GRASSE CREEK (SITE 5)
HWY. 10 - HWY. 96 (GREENWOOD BYPASS) (S)
SEBASTIAN COUNTY

ROUTE 10 SEC. 1

ARKANSAS STATE HIGHWAY COMMISSION

LITTLE ROCK, ARK.

DRAWN BY:	JCG	DATE:	9/6/2022	FILENAME:	b040861x5_L1.dgn
CHECKED BY:	JYP	DATE:	12/20/2022	SCALE:	1" = 20'
DESIGNED BY:	CNL	DATE:	7/1/2022		

BRIDGE NO. 07645 DRAWING NO. 66926

PRINT DATE: 9/22/2023

DATE REVISED	DATE REVISED	FED. RD. DIST. NO.	STATE	JOB NO.	SHEET NO.	TOTAL SHEETS
		6	ARK.	040861	187	291
		07645		- LAYOUT -		66927

BORING LEGEND

A1-Gravel and Cobbles
B1-Moist, Soft, Brown Sandy Silty Clay
C1-Moist, Medium Stiff, Brown Silty Clay with Sand
D1-Moist, Medium Stiff, Brown Silty Clay
E1-Moist, Soft, Wet Sandy Silty Clay
F1-Wet, Very Loose, Brown Silty Sand
G1-SHALE - Weathered, Medium Hard, Gray
H1-SHALE WITH FREQUENT SANDSTONE PARTINGS AND SEAMS - Unweathered, Medium Hard, Occasional Fractures and Slickensides, Gray
J1-SHALE WITH FREQUENT SANDSTONE PARTINGS AND SEAMS - Unweathered, Medium Hard, Gray
K1-Moist, Very Loose, Light Brown Silty Sand
L1-Wet, Very Loose, Light Brown Silty Sand
M1-Moist, Very Hard, Light Gray Clay
N1-SHALE - Highly Weathered, Medium Hard with Soft Layers, Gray
P1-SHALE WITH OCCASIONAL SANDSTONE PARTINGS - Unweathered, Medium Hard, Occasional Fractures, Gray
Q1-Wet, Medium Stiff, Light Brown Silty Clay with Sand
R1-SHALE WITH FREQUENT SANDSTONE PARTINGS AND SEAMS - Unweathered, Medium Hard, Gray
S1-SHALE - Unweathered, Medium Hard, Gray
T1-Moist, Very Loose, Reddish Brown Silt with Sand
U1-Moist, Soft, Reddish Brown Silty Clay with Sand
V1-Moist, Loose, Reddish Brown Clayey Sand with Gravel (Rock Fragments)
W1-SHALE - Highly Weathered, Soft, Dark Brown
X1-SHALE WITH INTERBEDDED SANDSTONE - Highly Weathered, Medium Hard, Frequent Fractures, Gray
Y1-SHALE WITH FREQUENT SANDSTONE PARTINGS AND SEAMS - Unweathered, Medium Hard, Occasional Fractures, Gray
Z1-Moist, Medium Stiff, Brown Sandy Silty Clay
A2-Moist, Medium Stiff, Brown Sandy Lean Clay
B2-Moist, Loose, Brown Sandy Silt
C2-Wet, Medium Dense, Brown Silty Clayey Sand with Some Gravel
D2-SHALE - Highly Weathered, Soft, Gray
E2-SHALE WITH INTERBEDDED SANDSTONE - Unweathered, Medium Hard, Gray
F2-Moist, Medium Stiff, Brown Silty Clay with Traces of Gravel
G2-Moist, Very Soft, Brown Silty Clay
H2-Moist, Dense, Brown Silty Sand
J2-Moist, Very Dense, Brown Sand
K2-SHALE WITH FREQUENT SANDSTONE PARTINGS - Unweathered, Medium Hard, Gray
L2-SHALE WITH INTERBEDDED SANDSTONE - Unweathered, Medium Hard, Occasional Fractures, Gray
M2-SHALE WITH INTERBEDDED SANDSTONE - Unweathered, Medium Hard, Gray
N2-SHALE WITH FREQUENT SANDSTONE PARTINGS AND SEAMS - Unweathered, Medium Hard, Occasional Fractures, Gray
P2-Moist, Very Loose, Brown Silty Sand
Q2-Moist, Medium Dense, Brown Sand with Silt and Traces of Gravel (Shale Fragments)
R2-SHALE WITH FREQUENT TO OCCASIONAL SANDSTONE PARTINGS AND SEAMS - Unweathered, Medium Hard, Occasional Fractures, Gray
S2-SHALE WITH INTERBEDDED SANDSTONE - Unweathered, Medium Hard, Frequent Fractures, Gray

"N" VALUES

Sta. 522+98 - 33' Left of C.L. Const.
3.0- 4.0,N=3
5.5- 6.5,N=4
8.0- 9.0,N=7
10.5- 11.5,N=87

Sta. 523+65 - 33' Left of C.L. Const.
3.0- 4.0,N=5
5.5- 6.5,N=1
8.0- 9.0,N=33
10.5- 11.5,N=59
15.0- 15.0,N=10(0")

Sta. 521+23 - 50' Right of C.L. Const.
5.5- 6.5,N=4
8.0- 9.0,N=6
10.5- 11.5,N=8
15.5- 16.5,N=4
20.5- 21.5,N=4
25.0- 25.4,N=60(5")

Sta. 521+26 - 7' Right of C.L. Const.
3.0- 4.0,N=4
5.5- 6.5,N=3
8.0- 9.0,N=0
10.5- 11.5,N=1
15.5- 16.1,N=60(7")
20.0- 20.1,N=30(1")

Sta. 521+72 - 19' Right of C.L. Const.
3.0- 4.0,N=4
5.5- 6.5,N=4
8.0- 9.0,N=0
10.5- 11.5,N=0
15.5- 16.5,N=8
20.0- 20.0,N=30(0")

Sta. 523+36 - 49' Right of C.L. Const.
3.0- 4.0,N=8
5.5- 6.5,N=7
8.0- 9.0,N=7
10.5- 11.5,N=11
15.5- 15.6,N=20(1")

Sta. 523+80 - 49' Right of C.L. Const.
3.0- 4.0,N=8
5.5- 6.5,N=3
8.0- 9.0,N=7
10.5- 11.5,N=13
15.5- 15.5,N=60(6")

HYDRAULIC DATA

FLOOD DESCRIPTION	FREQUENCY	TOTAL DISCHARGE (2)	DISCHARGE THIS SITE	NATURAL WATER SURFACE ELEVATION (1)	WATER SURFACE ELEVATION WITH BACKWATER
	YEARS	CFS	CFS	FEET	FEET
Design	50	16,934	5,241	486.5	486.8
Base	100	20,893	6,533	487.2	487.7
Extreme	500	33,875	11,387	489.1	490.0
Overtopping	>500	-	-	-	-

(1) Unconstricted water surface elevation without structures or roadway approaches.

(2) The total discharge includes flow at this site and Site 4.

Q100 backwater elevation for existing structure = 490.5 feet
Proposed Low Bridge Chord Elev. = 491.59 feet

Drainage Area = 42.2 square miles
Historical H.W. Elevation = N/A

DETAIL DRAWINGS:	DRAWING NO(S).
End Bents	66928-66931 & 66939-66942
Intermediate Bents	66932 & 66943
Steel H-Piling	66944
Elastomeric Bearings	66945-66946
260'-0" Continuous Plate Girder Unit	66933-66938 & 66947-66948
Type H3 Railing	66949
Type H4 Railing	66950
Transitional Approach Railing (Shared Use Path)	66951
General Notes For Steel Bridge Structures	55006
Details For Steel Bridge Structures	55007
Poured Silicone Joints	55008
Transitional Approach Railing	55013A
Type H2 Railing	55015
Bridge Traffic Rail	55070

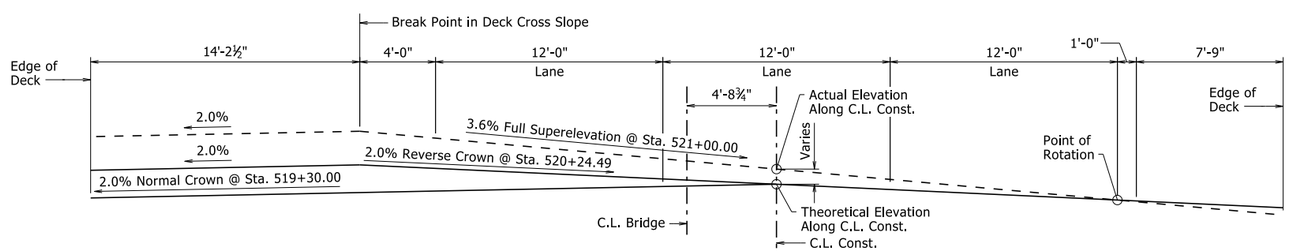

SUPERELEVATION TRANSITION SKETCH

(Looking Ahead, Normal Crown to Full Superelevation)
No Scale

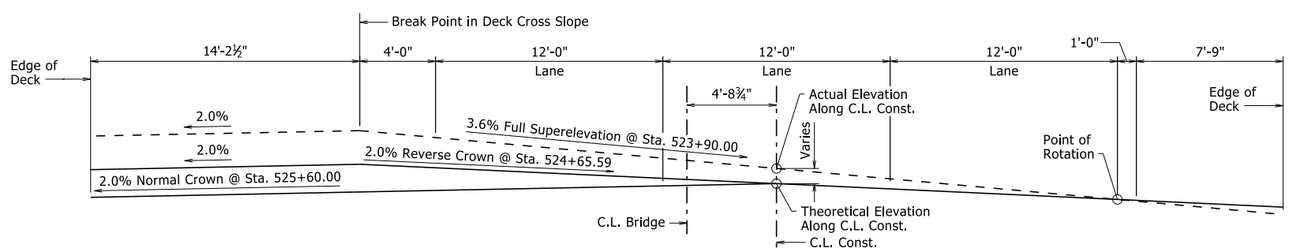

SUPERELEVATION TRANSITION SKETCH

(Looking Ahead, Full Superelevation to Normal Crown)
No Scale

STATE OF ARKANSAS
LICENSED PROFESSIONAL ENGINEER
No. 9235
9/22/23
CHARLES R. ELLIS

BRIDGE ENGINEER

SHEET 3 OF 3
LAYOUT OF BRIDGE
HIGHWAY 10 OVER VACHE GRASSE CREEK (SITE 5)
HWY. 10 - HWY. 96 (GREENWOOD BYPASS) (S)
SEBASTIAN COUNTY

ROUTE 10 SEC. 1

ARKANSAS STATE HIGHWAY COMMISSION

LITTLE ROCK, ARK.

DRAWN BY:	JCG	DATE:	12/2/2022	FILENAME:	b040861x5_L1.dgn
CHECKED BY:	JYP	DATE:	12/20/2022	SCALE:	As Noted
DESIGNED BY:	CNL	DATE:	7/1/2022		

BRIDGE NO. 07645 DRAWING NO. 66927

PRINT DATE: 9/22/2023

DATE REVISED	DATE REVISED	FED. RD. DIST. NO.	STATE	JOB NO.	SHEET NO.	TOTAL SHEETS
		6	ARK.	040861	188	291
		07645 - END BENTS - 66928				

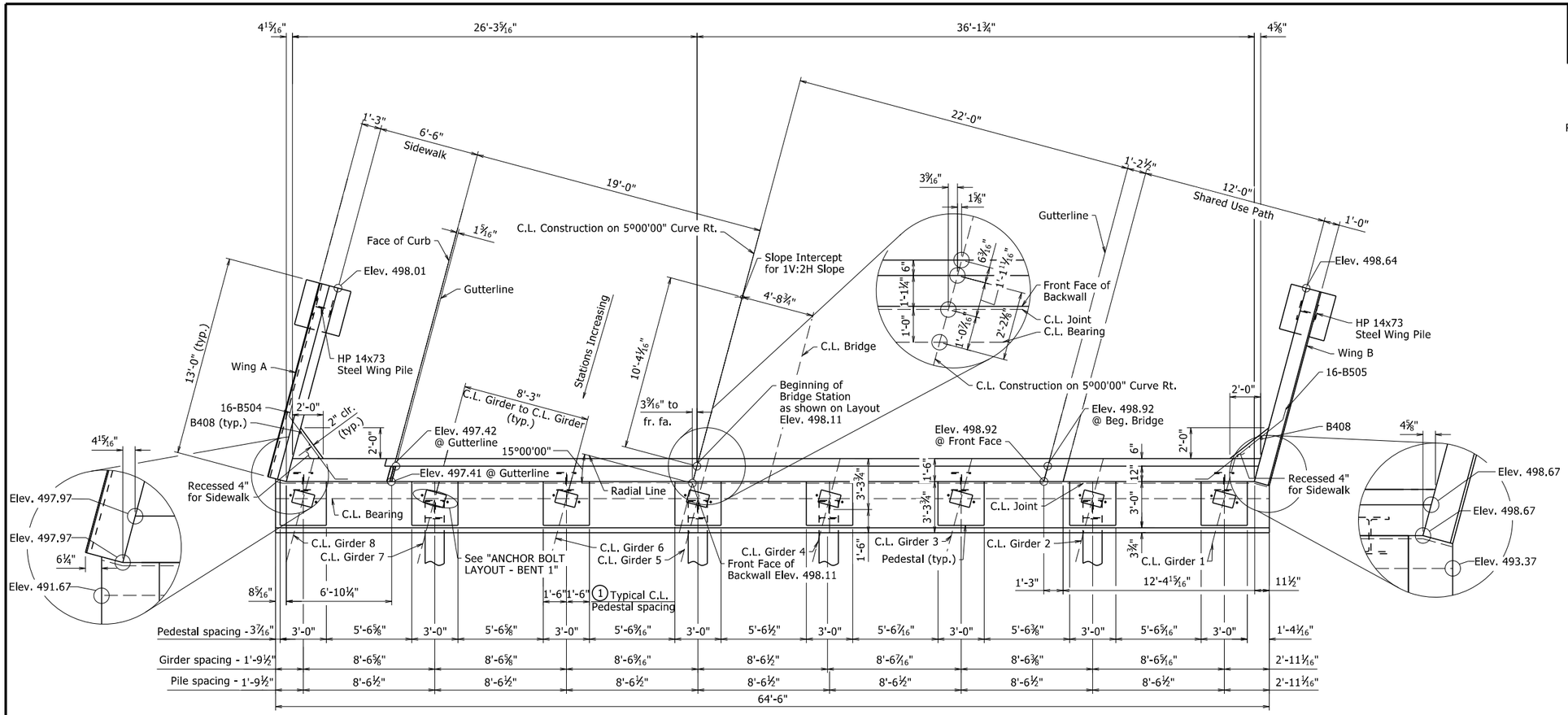

PLAN - BENT 1

¼" = 1'-0"

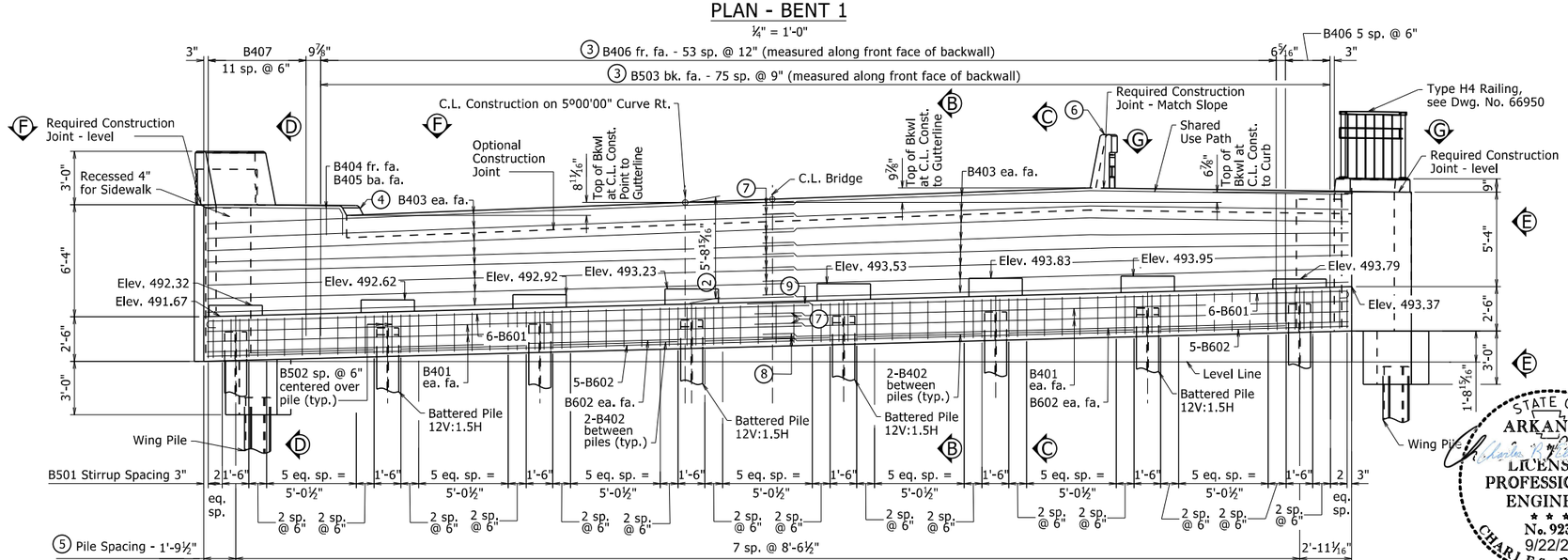

ELEVATION - BENT 1

LOOKING BACK
¼" = 1'-0"

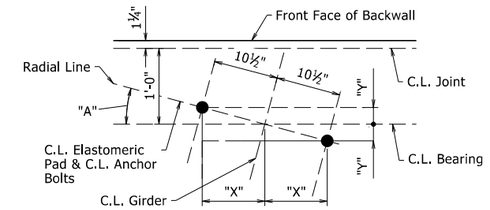

For Details of Elastomeric Bearings, see Dwg. Nos. 66945 & 66946.

ANCHOR BOLT LAYOUT - BENT 1

NO SCALE

	"A"	"X"	"Y"
Girder 1	14°36'49"	10 3/16"	2⅝"
Girder 2	14°43'08"	10⅛"	2 1/16"
Girder 3	14°49'33"	10⅛"	2 1/16"
Girder 4	14°56'02"	10⅛"	2 1/16"
Girder 5	15°02'39"	10⅛"	2¾"
Girder 6	15°09'21"	10⅛"	2¾"
Girder 7	15°16'09"	10⅛"	2¾"
Girder 8	15°23'03"	10⅛"	2 13/16"

① Pedestals shall be cast level at the elevations shown in "ELEVATION - BENT 1". See Dwg. No. 66939 for "PEDESTAL PLAN" & "TYPICAL PEDESTAL DETAILS".

② Measured at C.L. Construction at Front Face of Backwall.

③ See Dwg. No. 66939 for "SECTION B-B", "SECTION C-C", "SECTION D-D", and Dwg. No. 66930 for "VIEW F-F", & "VIEW G-G" for placement of reinforcing.

④ See Dwg. No. 66939 for "SIDEWALK & CURB DETAIL".

⑤ See Dwg. No. 66930 for "LAYOUT OF PILES - BENT 1".

⑥ See Dwg. No. 66941 for "ELEVATION OF BRIDGE TRAFFIC RAIL (SSTR36) - SHARED USE PATH DETAIL"

⑦ 1'-9" minimum lapped splice length

⑧ 2'-8" minimum lapped splice length

⑨ 3'-5" minimum lapped splice length

NOTES:

See Dwg. Nos. 66940 & 66941 for Wing Views and Sections.

See Dwg. No. 66942 for Three Dimensional View of Wing.

Wings and rails are constructed on curves concentric to C.L. Const.

For General Notes, see Std. Dwg. No. 55006 and Dwg. No. 66939.

STATE OF ARKANSAS
LICENSED PROFESSIONAL ENGINEER
No. 9235
9/22/23
CHARLES R. ELLIS
Sep 22, 2023 9:27 AM
DocuSign

BRIDGE ENGINEER

SHEET 1 OF 4
DETAILS OF END BENTS
VACHE GRASSE CREEK (SITE 5)

ROUTE SEC.

ARKANSAS STATE HIGHWAY COMMISSION

LITTLE ROCK, ARK.

DRAWN BY: YG DATE: 7/31/2023 FILENAME: b040861x5_b1.dgn
CHECKED BY: MCB DATE: 9/1/2023 SCALE: AS NOTED
DESIGNED BY: PGT DATE: 7/18/2023

BRIDGE NO. 07645 DRAWING NO. 66928

PRINT DATE: 9/22/2023

DATE REVISED	DATE REVISED	FED. RD. DIST. NO.	STATE	JOB NO.	SHEET NO.	TOTAL SHEETS
		6	ARK.	040861	189	291
		07645 - END BENTS - 66929				

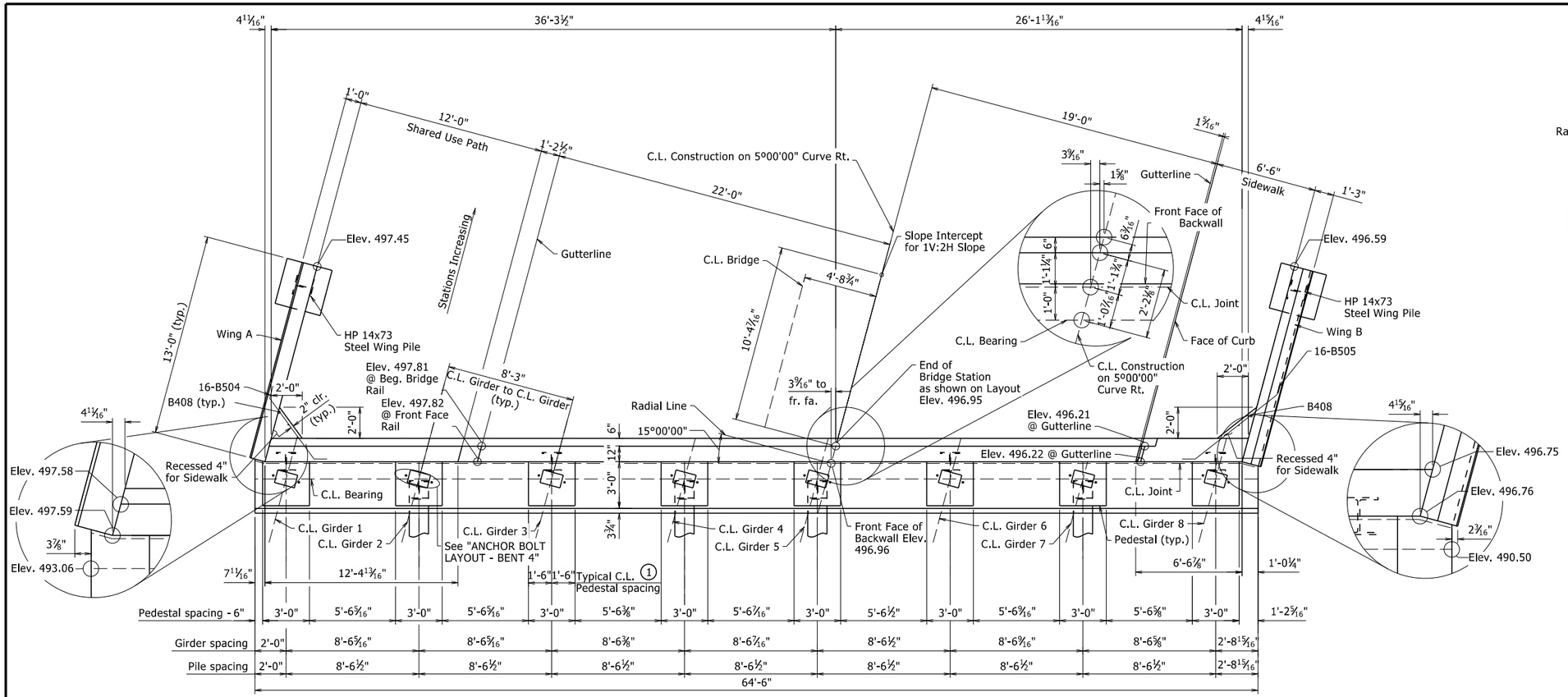

PLAN - BENT 4

¼" = 1'-0"

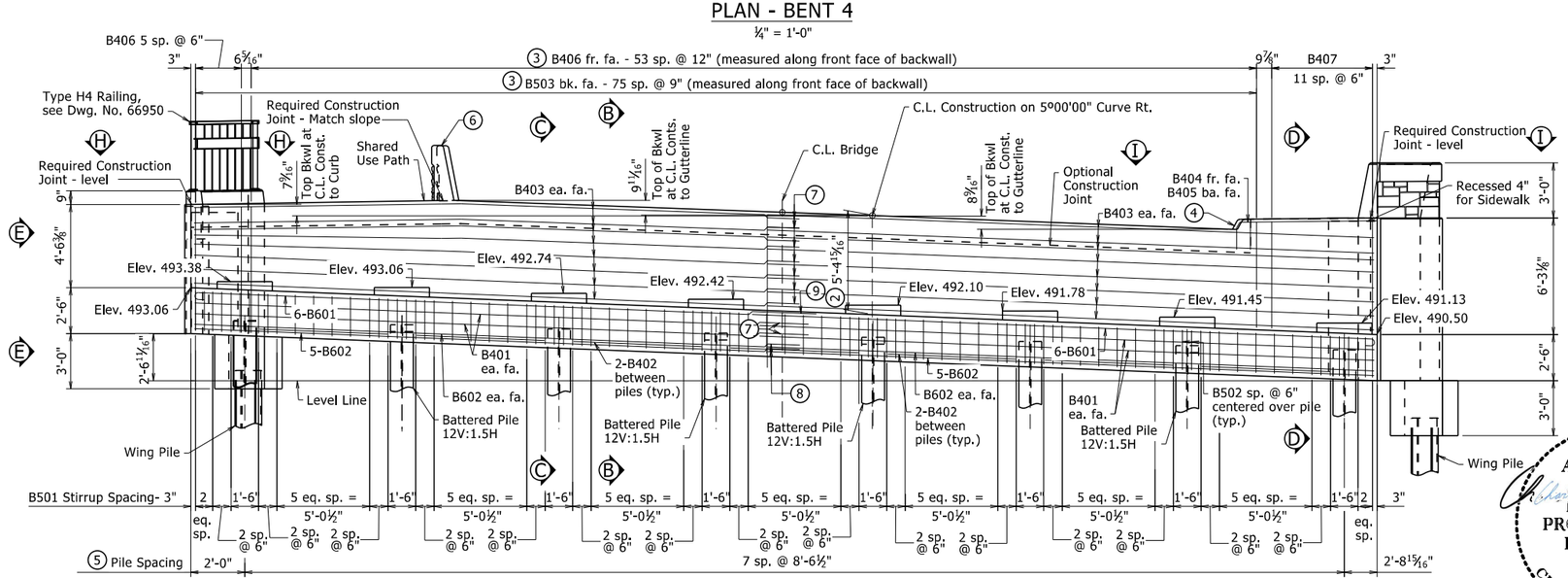

ELEVATION - BENT 4

LOOKING AHEAD

¼" = 1'-0"

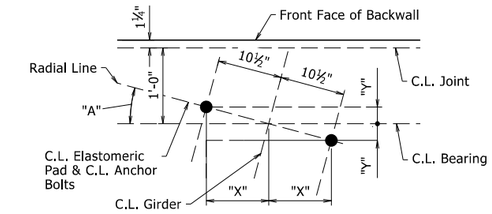

For Details of Elastomeric Bearings, see Dwg. Nos. 66945 & 66946.

ANCHOR BOLT LAYOUT - BENT 4

NO SCALE

	"A"	"X"	"Y"
Girder 1	14°30'46"	10 3/16"	2⅝"
Girder 2	14°37'02"	10 3/16"	2⅝"
Girder 3	14°43'24"	10⅛"	2 11/16"
Girder 4	14°49'51"	10⅛"	2 11/16"
Girder 5	14°56'25"	10⅛"	2 11/16"
Girder 6	15°03'04"	10⅛"	2¾"
Girder 7	15°09'49"	10⅛"	2¾"
Girder 8	15°16'40"	10⅛"	2¾"

1. Pedestals shall be cast level at the elevations shown in "ELEVATION - BENT 4". See Dwg. No. 66939 for "PEDESTAL PLAN" & "TYPICAL PEDESTAL DETAILS".
2. Measured at C.L. Construction at Front Face of Backwall.
3. See Dwg. No. 66939 for "SECTION B-B", "SECTION C-C", "SECTION D-D", "VIEW E-E", and Dwg. No. 66930 for "VIEW H-H" & "VIEW I-I", for placement of reinforcing.
4. See Dwg. No. 66939 for "SIDEWALK & CURB DETAIL".
5. See Dwg. No. 66930 for "LAYOUT OF PILES - BENT 4".
6. See Dwg. No. 66941 for "ELEVATION OF BRIDGE TRAFFIC RAIL (SSTR36) -SHARED USE PATH"
7. 1'-9" minimum lapped splice length
8. 2'-8" minimum lapped splice length
9. 3'-5" minimum lapped splice length

NOTES:

See Dwg. Nos. 66940 & 66941 for Wing Views and Sections.

See Dwg. No. 66942 for Three Dimensional View of Wing.

Wings and rails are constructed on curves concentric to C.L. Const.

For General Notes, see Std. Dwg. No. 55006 and Dwg. No. 66939.

STATE OF ARKANSAS
Charles R. Ellis
Sep 11, 2023 9:28 AM
LICENSED PROFESSIONAL ENGINEER
No. 9235
9/22/23
CHARLES R. ELLIS
BRIDGE ENGINEER

SHEET 2 OF 4
DETAILS OF END BENTS
VACHE GRASSE CREEK (SITE 5)

ROUTE SEC.

ARKANSAS STATE HIGHWAY COMMISSION

LITTLE ROCK, ARK.

DRAWN BY: YG DATE: 7/31/2023 FILENAME: b040861x5_b1.dgn
CHECKED BY: MCB DATE: 9/1/2023 SCALE: AS NOTED
DESIGNED BY: PGT DATE: 7/18/2023

BRIDGE NO. 07645 DRAWING NO. 66929

PRINT DATE: 9/22/2023

DATE REVISED	DATE REVISED	FED. RD. DIST. NO.	STATE	JOB NO.	SHEET NO.	TOTAL SHEETS
		6	ARK.	040861	190	291
		07645 - END BENTS - 66930				

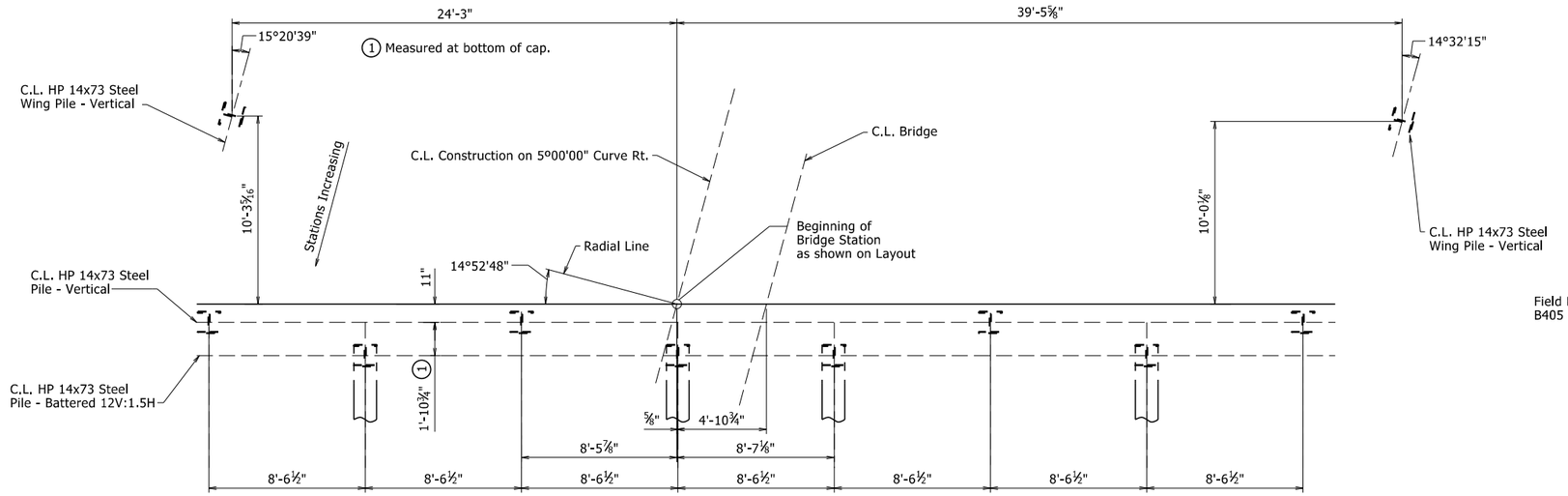

LAYOUT OF PILES - BENT 1

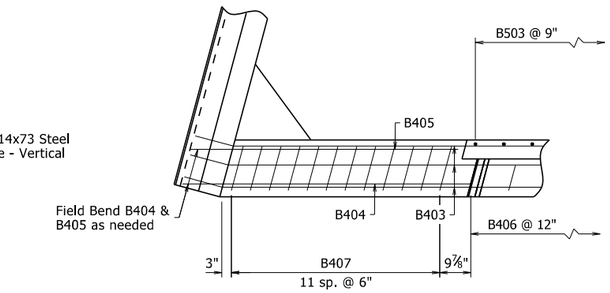

VIEW F-F

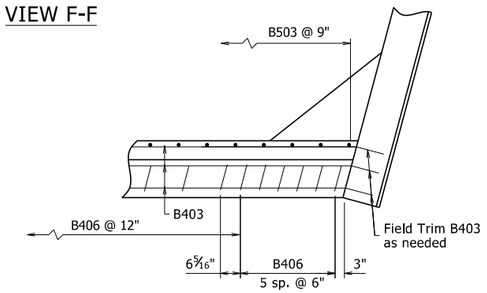

VIEW G-G

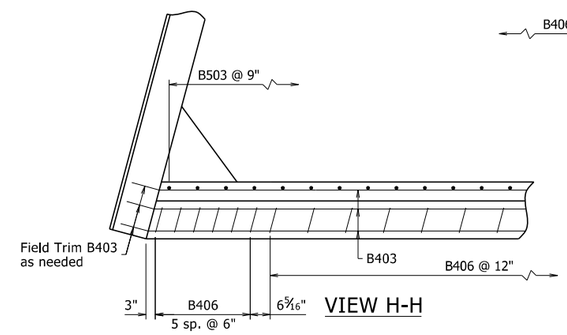

VIEW H-H

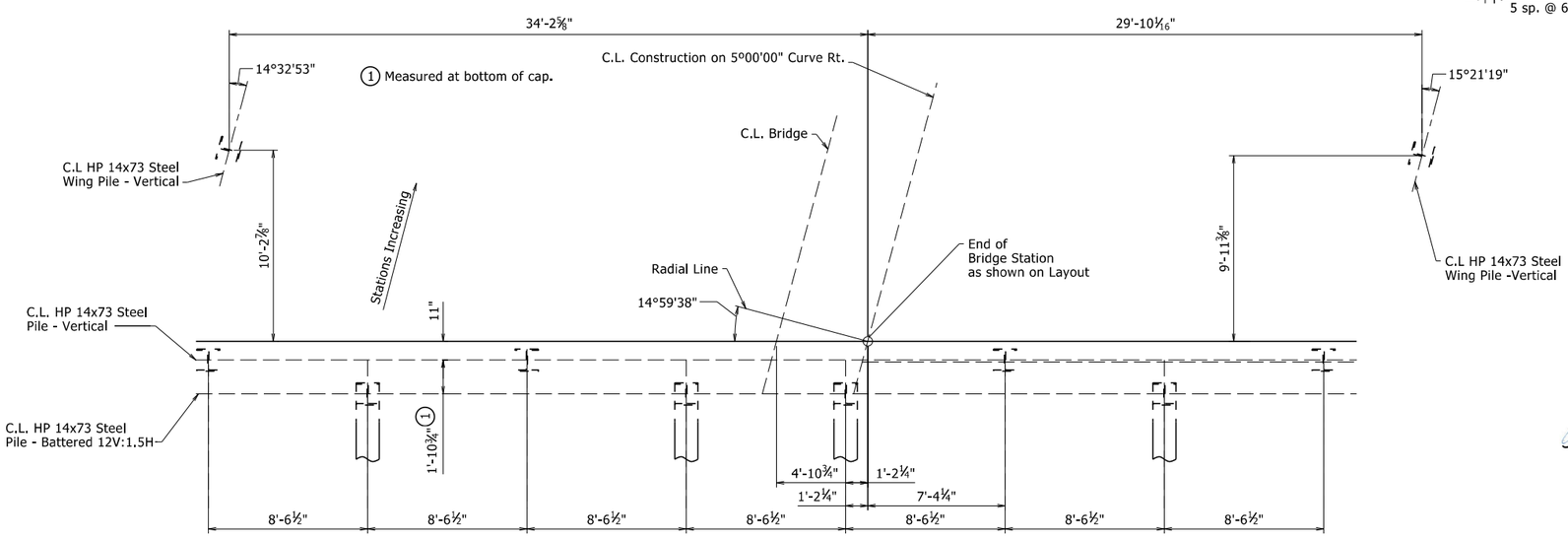

LAYOUT OF PILES - BENT 4

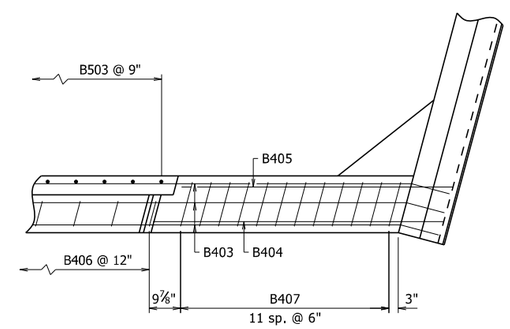

VIEW I-I

STATE OF ARKANSAS
LICENSED PROFESSIONAL ENGINEER
No. 9235
9/22/23
CHARLES R. ELLIS

BRIDGE ENGINEER

SHEET 3 OF 4
DETAILS OF END BENTS
VACHE GRASSE CREEK (SITE 5)

ROUTE SEC.

ARKANSAS STATE HIGHWAY COMMISSION

LITTLE ROCK, ARK.

DRAWN BY:	YG	DATE:	07/31/2023	FILENAME:	b040861x5_b1.dgn
CHECKED BY:	MCB	DATE:	9/1/2023	SCALE:	No Scale
DESIGNED BY:	PGT	DATE:	7/18/2023		

BRIDGE NO. 07645 DRAWING NO. 66930

PRINT DATE: 9/22/2023

DATE REVISED	DATE REVISED	FED. RD. DIST. NO.	STATE	JOB NO.	SHEET NO.	TOTAL SHEETS
		6	ARK.	040861	191	291
		07645 - END BENTS - 66931				

BAR LIST - PER BENT

MARK	NO. REQ'D	LENGTH	P.D.
B401	8	33'-6"	2"
B402	14	7'-0"	Str.
B403	32	33'-0"	2"
B404	1	9'-2"	2½"
B405	1	8'-7"	2½"
B406	60	8'-11"	2"
B407	12	15'-4"	2"
B408	6	7'-7"	Str.
B409	8	3'-2"	2"
B410	2	5'-4"	2"
B411	2	5'-6"	2"
B412	32	5'-11"	2"
B413	32	6'-3"	2"
B414	15	9'-8"	2"
B501	78	13'-3"	2½"
B502	16	8'-5"	2½"
B503	75	5'-8"	Str.
B504	16	"A"	3¾"
B505	16	"B"	3¾"
B601	12	34'-6"	4½"
B602	14	33'-6"	Str.
C401E	26	3'-10"	2"
C402E	4	12'-8"	Str.
F601	12	2'-8"	Str.
F602	24	11'-5"	4½"
(1) R401E	28	6'-4"	2½"
R402E	8	12'-8"	Str.
R404E	8	0'-8"	Str.
(1) W401E	26	3'-11"	3¾"
W402	20	16'-5"	2"
W403	20	16'-2"	2"
W701	68	12'-8"	Str.

BENDING DIAGRAMS

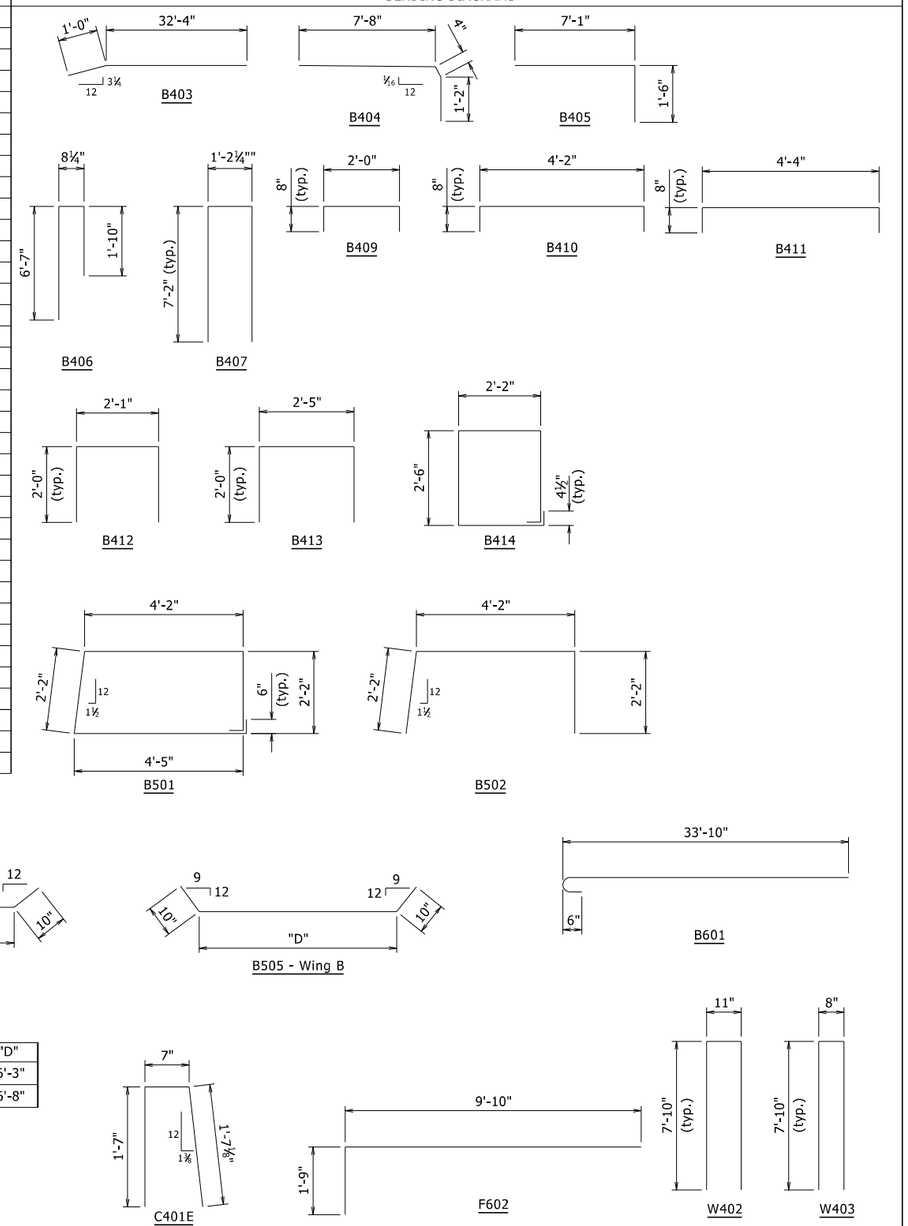

	"A"	"B"	"C"	"D"
Bent 1	6'-8"	7'-11"	5'-0"	6'-3"
Bent 4	6'-6"	8'-4"	4'-10"	6'-8"

Dimensions are out to out of bars.
Bars with the "E" suffix shall be epoxy coated.

(1) See Std. Dwg. No. 55070 for details of rail reinforcing and location of bars with an "R" prefix & W401E.

STATE OF ARKANSAS
LICENSED PROFESSIONAL ENGINEER
No. 9235
9/22/23
CHARLES R. ELLIS

BRIDGE ENGINEER

SHEET 4 OF 4
DETAILS OF END BENTS
VACHE GRASSE CREEK (SITE 5)

ROUTE SEC.

ARKANSAS STATE HIGHWAY COMMISSION

LITTLE ROCK, ARK.

DRAWN BY: YG DATE: 07/31/2023 FILENAME: b040861x5_b1.dgn
CHECKED BY: MCB DATE: 9/1/2023 SCALE: No Scale
DESIGNED BY: PGT DATE: 7/18/2023

BRIDGE NO. 07645 DRAWING NO. 66931

PRINT DATE: 9/22/2023

DATE REVISED	DATE REVISED	FED. RD. DIST. NO.	STATE	JOB NO.	SHEET NO.	TOTAL SHEETS
		6	ARK.	040861	192	291
		07645 - INTERMEDIATE BENTS - 66932				

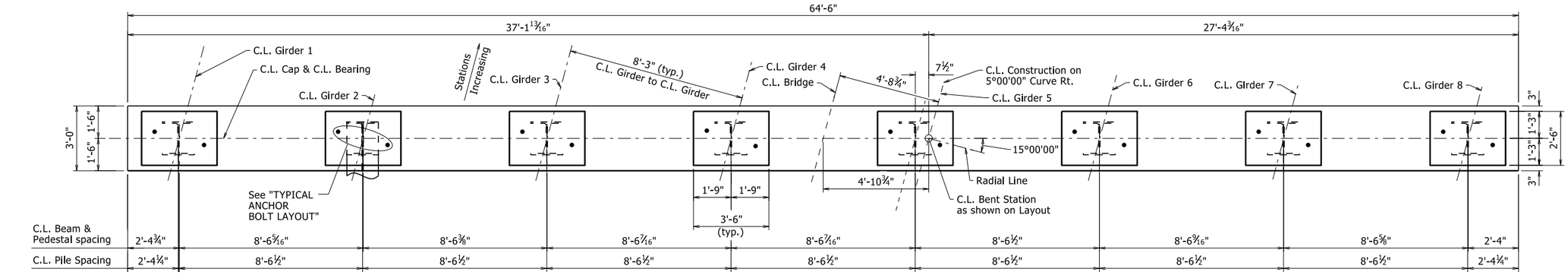

PLAN

3/8" = 1'-0"

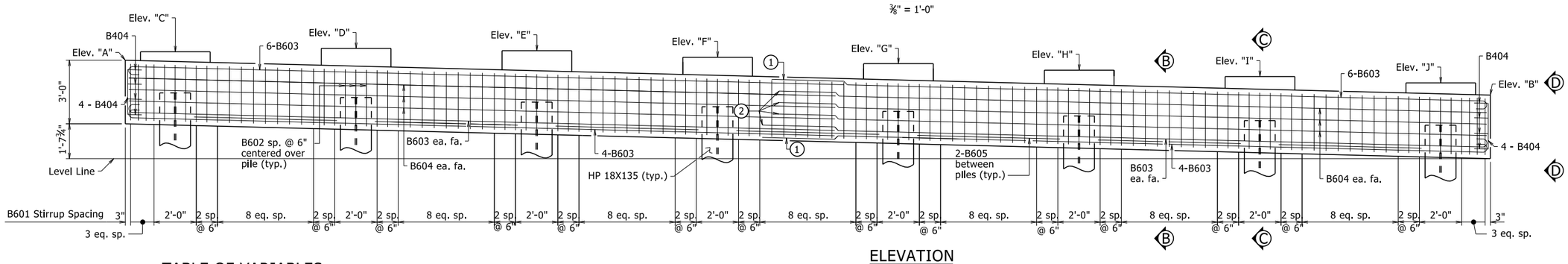

ELEVATION

LOOKING AHEAD

3/8" = 1'-0"

TABLE OF VARIABLES

Bent	Elev. "A"	Elev. "B"	Elev. "C"	Elev. "D"	Elev. "E"	Elev. "F"	Elev. "G"	Elev. "H"	Elev. "I"	Elev. "J"
2	493.16	491.53	493.57	493.73	493.62	493.31	493.01	492.70	492.40	492.10
3	492.86	491.23	493.27	493.43	493.32	493.01	492.71	492.40	492.10	491.79

BAR LIST-PER BENT

MARK	NO. REQ'D	LENGTH	P.D.
B401	32	7'-5"	2"
B402	40	6'-5"	2"
B403	11	10'-8"	2"
B404	16	3'-8"	2"
B601	99	11'-10"	4 1/2"
B602	24	7'-8"	4 1/2"
B603	24	34'-6"	4 1/2"
B604	12	33'-5"	Str.
B605	14	6'-9"	Str.

BENDING DIAGRAMS

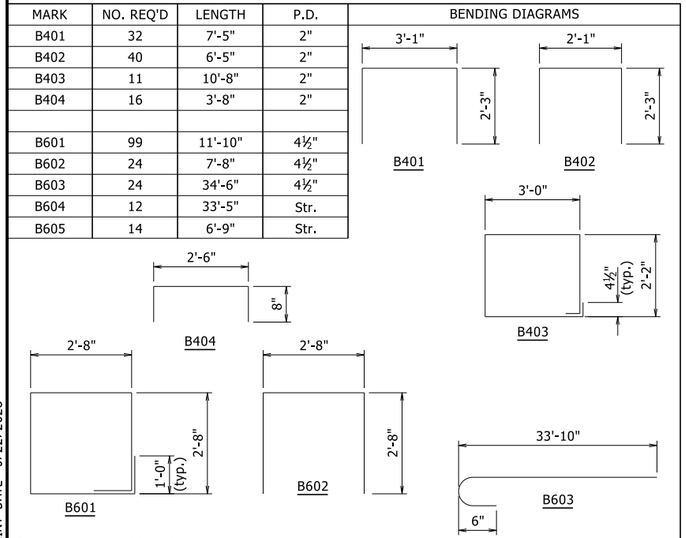

Dimensions are out to out of bars.

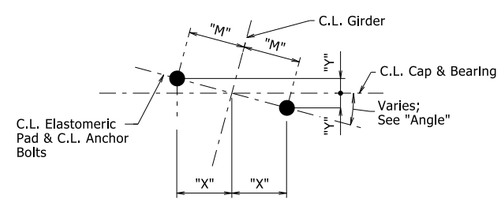

For Details of Elastomeric Bearings, see Dwg. No. 66945 & 66946.

TYPICAL ANCHOR BOLT LAYOUT

NO SCALE

Bent	Girder	"X"	"Y"	Angle
2	1	1'-1 13/16"	3 5/8"	14°33'47"
	2	1'-1 13/16"	3 5/8"	14°40'05"
	3	1'-1 3/4"	3 5/8"	14°46'28"
	4	1'-1 3/4"	3 11/16"	14°52'56"
	5	1'-1 3/4"	3 11/16"	14°59'31"
	6	1'-1 3/4"	3 11/16"	15°06'11"
	7	1'-1 3/4"	3 3/4"	15°12'58"
	8	1'-1 3/4"	3 3/4"	15°19'51"
3	1	1'-1 13/16"	3 9/16"	14°33'47"
	2	1'-1 13/16"	3 5/8"	14°40'05"
	3	1'-1 5/8"	3 5/8"	14°46'28"
	4	1'-1 3/4"	3 11/16"	14°52'56"
	5	1'-1 3/4"	3 11/16"	14°59'31"
	6	1'-1 3/4"	3 11/16"	15°06'11"
	7	1'-1 3/4"	3 3/4"	15°12'58"
	8	1'-1 3/4"	3 3/4"	15°19'51"

Bent No.	"M"
2	14 1/4"
3	14 1/4"

See Dwg. No. 66943 for "SECTION B-B", "SECTION C-C", & "VIEW D-D".

1. 3'-5" minimum lapped splice length
2. 2'-8" minimum lapped splice length
3. Pedestals shall be cast level at the elevations shown in "ELEVATION". See Dwg. No. 66943 for "PEDESTAL PLAN" & "TYPICAL PEDESTAL DETAILS".

STATE OF ARKANSAS
LICENSED PROFESSIONAL ENGINEER
No. 9235
9/22/23
CHARLES R. ELLIS

BRIDGE ENGINEER

DETAILS OF INTERMEDIATE BENTS
VACHE GRASSE CREEK (SITE 5)

ROUTE SEC.

ARKANSAS STATE HIGHWAY COMMISSION

LITTLE ROCK, ARK.

DRAWN BY: RD DATE: 08/21/2023 FILENAME: b040861x5_b2.dgn
CHECKED BY: MCB DATE: 08/29/2023 SCALE: AS NOTED
DESIGNED BY: PGT DATE: 08/2023
BRIDGE NO. 07645 DRAWING NO. 66932

PRINT DATE: 9/22/2023

DATE REVISED	DATE REVISED	FED. RD. DIST. NO.	STATE	JOB NO.	SHEET NO.	TOTAL SHEETS
		6	ARK.	040861	193	291
		07645 - 260' UNIT - 66933				

Slab Reinforcing:

Longitudinal: S401E placed as shown in bottom between girders
S501E placed as shown, see "REINFORCING PLAN" on Dwg. Nos. 66937 and 66938.
S504E placed as shown over intermediate supports, see "REINFORCING PLAN" on Dwg. Nos. 66937 and 66938.

Transverse: S502E in top and bottom @ 6" o.c.
S503E @ 6" in top of overhangs (bundled with No. 5 bars).
See "DETAIL A" on Dwg. No. 66947.

Bar positions or clearances from the forms shall be maintained by means of stays, ties, hangers, or other approved devices per Subsection 804.06. Placement of slab bolsters or high-chairs with full-length lower runners directly on removable deck forms will not be allowed.

(1) Break Point to Gutterline

(2) Tolerance: Minus = ¼";
Plus equal to the amount of slab thickening used to meet slab thickness tolerance. See "ADJUSTMENT FOR SLAB THICKNESS TOLERANCE" on Std. Dwg. No. 55007.

(3) See "ADJUSTMENT FOR SLAB THICKNESS TOLERANCE" on Std. Dwg. No. 55007.

(4) Bridge Traffic Rail (Type SSTR36). See Std. Dwg. No. 55070 for additional details.

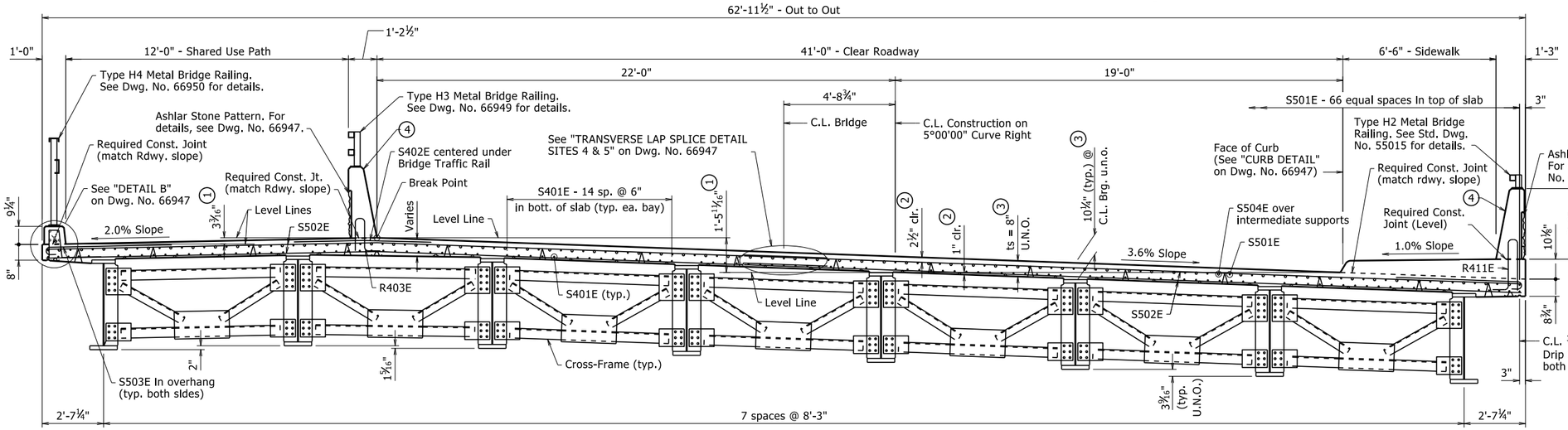

TYPICAL ROADWAY SECTION

Looking Ahead
⅜" = 1'-0"

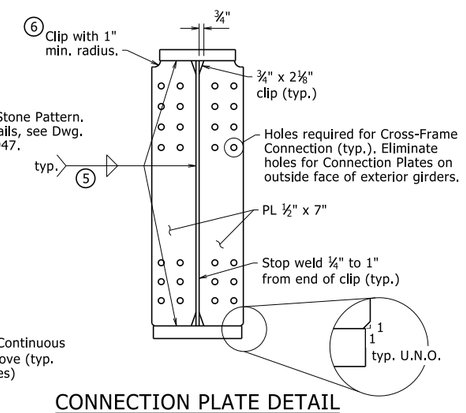

CONNECTION PLATE DETAIL

1" = 1'-0"

NOTE: All Bearing Stiffeners shall be vertical in final position.

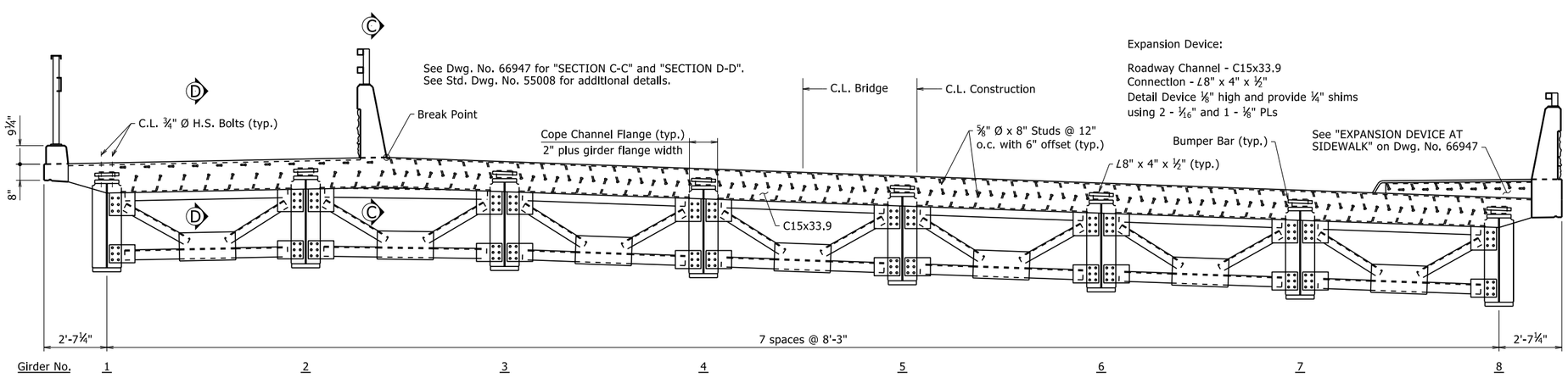

Expansion Device:

Roadway Channel - C15x33.9
Connection - ∠8" x 4" x ½"
Detail Device ⅛" high and provide ¼" shims using 2 - 1/16" and 1 - ⅛" PLs

TYPICAL ROADWAY SECTION THRU JOINT

Looking Ahead
⅜" = 1'-0"

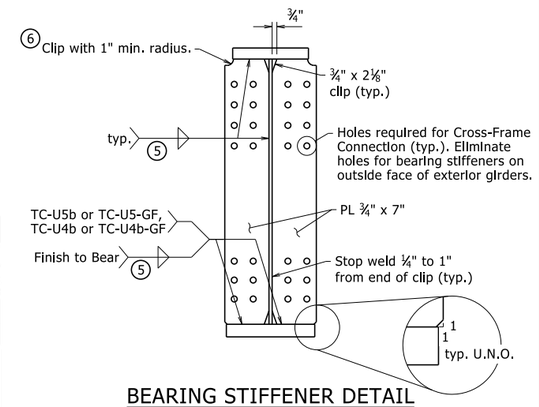

BEARING STIFFENER DETAIL

1" = 1'-0"

All horizontal dimensions shown are measured along a line radial to C.L. Constuction.

Class 2 Protective Surface Treatment shall be applied to the Roadway Surface, Sidewalk Surface (including curbing), and the Roadway Face and Top of Concrete Bridge Rail in accordance with Section 803.

Class 3 Textured Coating Finish shall be applied to bridge surfaces as specified in Special Provision "Textured Coating Finish" and in accordance with Subsection 802.19(b)(3).

(5) See "WELD TABLE" on Std. Dwg. No. 55007 for min. weld size.

(6) If permanent steel bridge deck forms are used, the Fabricator shall clip plates as necessary to accommodate the deck form supports.

STATE OF ARKANSAS
LICENSED PROFESSIONAL ENGINEER
No. 9235
9/22/23
CHARLES R. ELLIS

BRIDGE ENGINEER

SHEET 1 OF 6
DETAILS OF 260'-0"
CONTINUOUS PLATE GIRDER UNIT
VACHE GRASSE CREEK (SITE 5)

ROUTE SEC.

ARKANSAS STATE HIGHWAY COMMISSION

LITTLE ROCK, ARK.

DRAWN BY:	WAC	DATE:	07/2023	FILENAME:	b040861x5_s1.dgn
CHECKED BY:	YG	DATE:	08/2023	SCALE:	As Noted
DESIGNED BY:	JSQ	DATE:	06/2023		

BRIDGE NO. 07645 DRAWING NO. 66933

PRINT DATE: 9/22/2023

DATE REVISED	DATE REVISED	FED. RD. DIST. NO.	STATE	JOB NO.	SHEET NO.	TOTAL SHEETS
		6	ARK.	040861	194	291
		07645 - 260' UNIT - 66934				

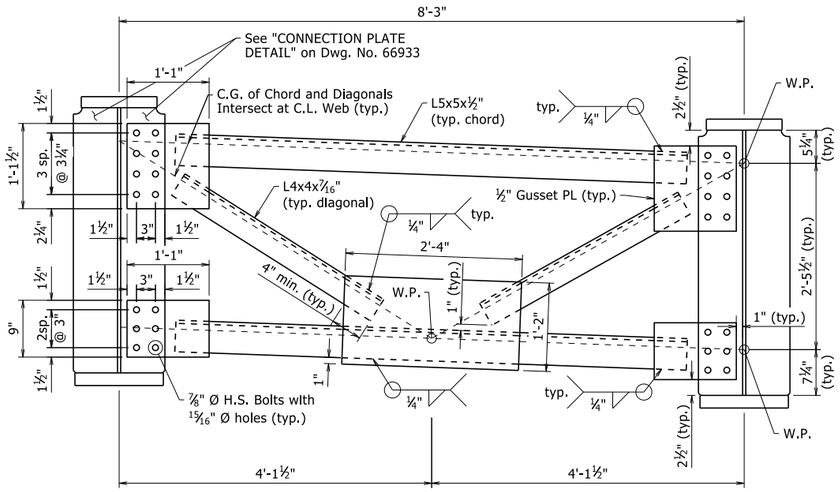

DETAILS OF CROSS-FRAMES AT CONNECTION PLATES

1" = 1'-0"

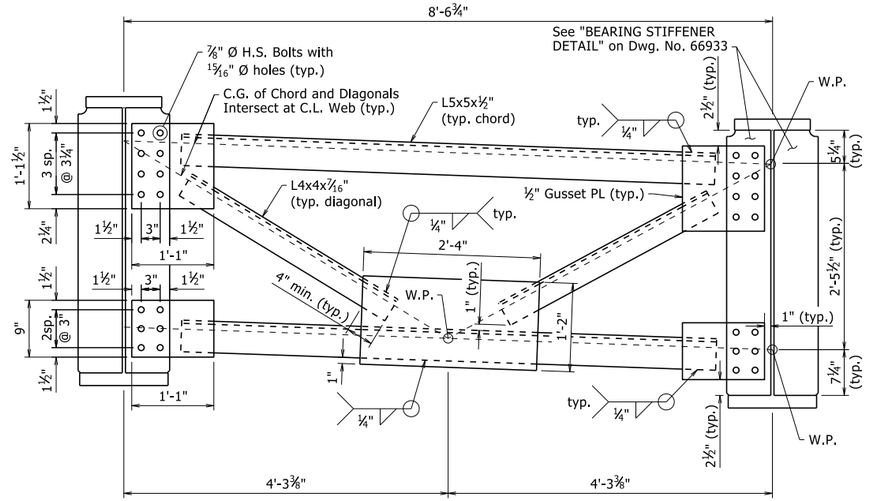

DETAILS OF CROSS-FRAMES AT BENTS

1" = 1'-0"

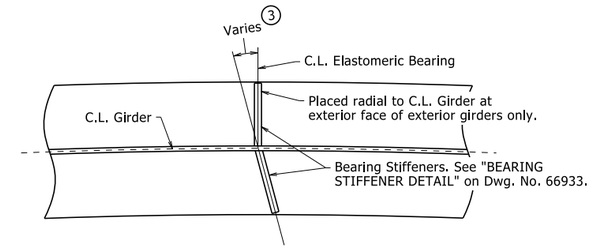

EXTERIOR GIRDERS

Girder 1 shown, Girder 8 similar

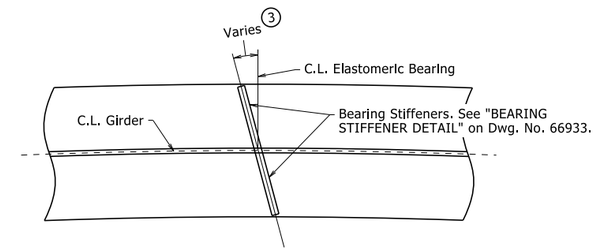

INTERIOR GIRDERS

TYPICAL BEARING STIFFENERS

1½" = 1'-0"

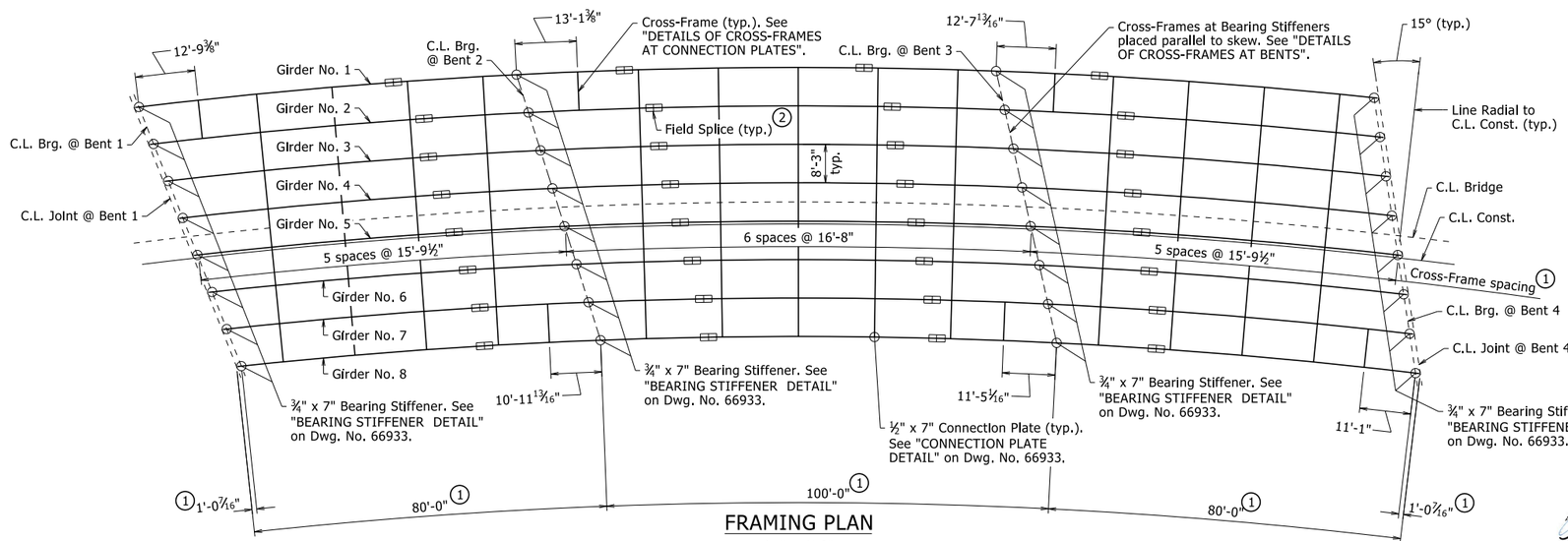

FRAMING PLAN

1/16" = 1'-0"

1. Measured along C.L. Construction.
2. Splice location varies per girder. See "TABLE OF GIRDER VARIABLES".
3. See Dwg. Nos. 66928, 66929 & 66932.

C.L. Girders are concentric to C.L. Construction. Cross-Frames placed radial to C.L. Construction unless noted otherwise. Bearing Stiffeners at the outside face of Exterior Girders shall be placed radial to C.L. Construction.

Skew is measured at C.L. Joint for End Bents and at C.L. Bent for Intermediate Bents.

The erection of the structural steel shall be performed according to a plan permitting the steel to be erected plumb with bolts tightened while the steel is as close as possible to the steel dead load condition.

STATE OF ARKANSAS
LICENSED PROFESSIONAL ENGINEER
No. 9235
9/22/23
CHARLES R. ELLIS

BRIDGE ENGINEER

SHEET 2 OF 6
DETAILS OF 260'-0"
CONTINUOUS PLATE GIRDER UNIT
VACHE GRASSE CREEK (SITE 5)

ROUTE SEC.

ARKANSAS STATE HIGHWAY COMMISSION

LITTLE ROCK, ARK.

DRAWN BY:	WAC	DATE:	07/2023	FILENAME:	b040861x5_s1.dgn
CHECKED BY:	YG	DATE:	08/2023	SCALE:	As Noted
DESIGNED BY:	JSQ	DATE:	06/2023		

BRIDGE NO. 07645 DRAWING NO. 66934

PRINT DATE: 9/22/2023

DATE REVISED	DATE REVISED	FED. RD. DIST. NO.	STATE	JOB NO.	SHEET NO.	TOTAL SHEETS
		6	ARK.	040861	195	291
		07645 - 260' UNIT - 66935				

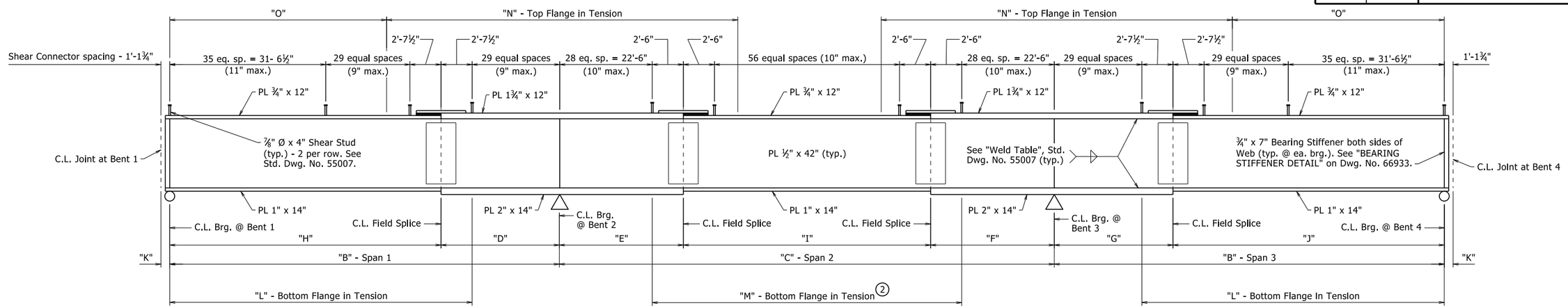

① Dimensions measured along C.L. Girder.

② Centered at midpoint of span

GIRDER ELEVATION

No Scale

All structural steel shall be ASTM A709, Grade 50W unless otherwise noted and shall be paid for as "Structural Steel in Plate Girder Spans (A709, Gr. 50W)". See Std. Dwg. Nos. 55006 and 55007 for additional notes and details.

① TABLE OF GIRDER VARIABLES

Girder No.	"B"	"C"	"D"	"E"	"F"	"G"	"H"	"I"	"J"	"K"	"L"	"M"	"N"	"O"
1	81'-3¾"	102'-11 3/16"	26'-5 1/16"	23'-1⅞"	28'-3 13/16"	22'-2 13/16"	54'-10 1/16"	51'-5½"	59'-0 15/16"	1'-0⅜"	70'-0"	78'-0"	100'-6"	32'-0"
2	80'-8 13/16"	102'-2 9/16"	22'-5⅜"	26'-9⅞"	24'-3⅜"	25'-10 15/16"	58'-3 7/16"	51'-1 5/16"	54'-9 15/16"	1'-0 7/16"	69'-0"	77'-0"	93'-0"	34'-6"
3	80'-1 15/16"	101'-5 15/16"	24'-0⅞"	25'-5"	25'-4¼"	24'-0 3/16"	56'-1 1/16"	50'-8⅝"	56'-1¾"	1'-0 7/16"	68'-0"	74'-0"	81'-0"	40'-0"
4	79'-7"	100'-9¼"	23'-10"	25'-3 11/16"	25'-1 3/16"	23'-9⅜"	55'-9"	50'-4 7/16"	55'-9⅝"	1'-0 7/16"	68'-0"	76'-6"	81'-0"	39'-0"
5	79'-0 1/16"	100'-0⅝"	23'-8⅜"	24'-10 3/16"	24'-7⅛"	23'-9 15/16"	55'-3 7/16"	50'-7 5/16"	55'-2⅛"	1'-0 7/16"	68'-0"	76'-0"	80'-0"	39'-0"
6	78'-5 3/16"	99'-4"	23'-4 9/16"	24'-10 5/16"	24'-8 7/16"	23'-7¼"	55'-0 9/16"	49'-9¼"	54'-9⅞"	1'-0 7/16"	66'-0"	73'-0"	80'-0"	39'-0"
7	77'-10¼"	98'-7⅜"	23'-4"	24'-8 9/16"	24'-10 5/16"	23'-5⅞"	54'-6 3/16"	49'-0½"	54'-4⅜"	1'-0 7/16"	67'-0"	73'-6"	80'-0"	38'-0"
8	77'-3 5/16"	97'-10 11/16"	24'-11"	23'-2"	25'-9½"	21'-4 13/16"	52'-4 5/16"	48'-11¼"	55'-10 7/16"	1'-0 7/16"	65'-0"	70'-0"	86'-0"	35'-0"

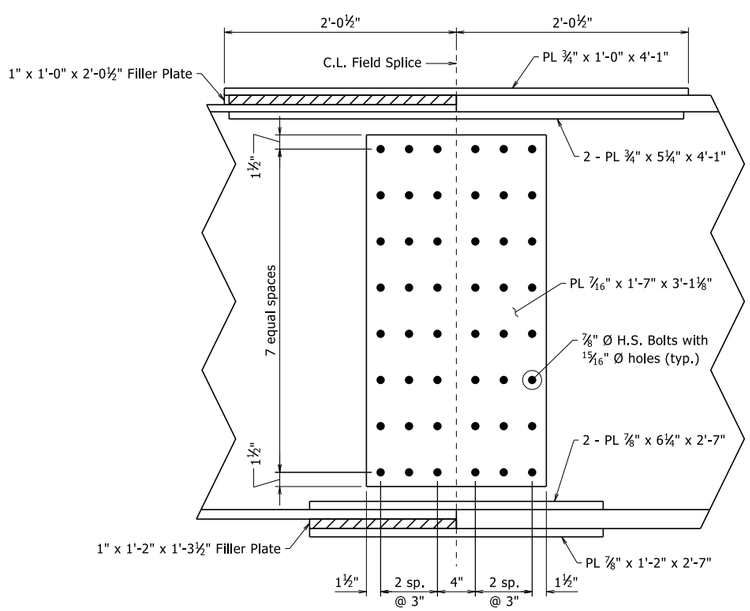

WEB SPLICE

Bolted field splices may be eliminated or shop welded splices may be substituted with the approval of the Engineer. Payment will be made on the basis of plan quantities.

All field splices plates shall be ASTM A709 Gr. 50W.

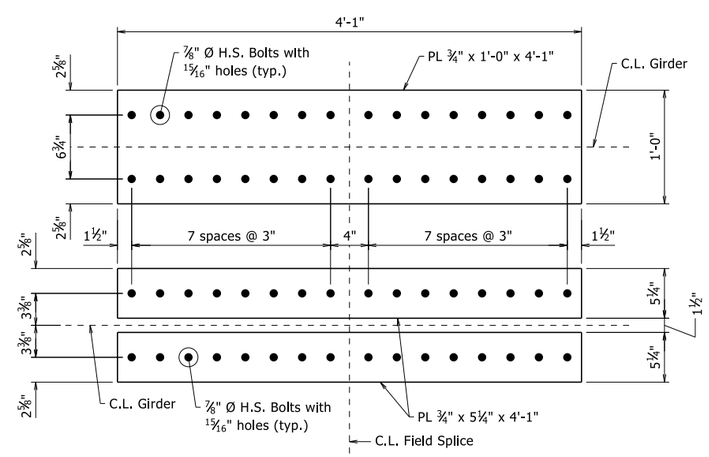

TOP FLANGE SPLICE

FIELD SPLICE DETAILS

1½" = 1'-0"

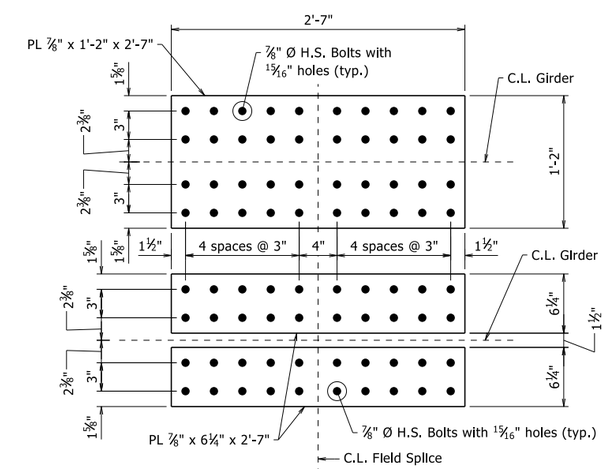

BOTTOM FLANGE SPLICE

STATE OF ARKANSAS
2023.11.28 23:00:00 -06'00'
LICENSED PROFESSIONAL ENGINEER
No. 9235
9/22/23
CHARLES R. ELLIS

BRIDGE ENGINEER

SHEET 3 OF 6
DETAILS OF 260'-0"
CONTINUOUS PLATE GIRDER UNIT
VACHE GRASSE CREEK (SITE 5)

ROUTE SEC.

ARKANSAS STATE HIGHWAY COMMISSION

LITTLE ROCK, ARK.

DRAWN BY:	WAC	DATE:	07/2023	FILENAME:	b040861x5_s1.dgn
CHECKED BY:	YG	DATE:	08/2023	SCALE:	As Noted
DESIGNED BY:	JSQ	DATE:	06/2023		

BRIDGE NO. 07645 DRAWING NO. 66935

PRINT DATE: 9/22/2023

DATE REVISED	DATE REVISED	FED. RD. DIST. NO.	STATE	JOB NO.	SHEET NO.	TOTAL SHEETS
		6	ARK.	040861	196	291
		07645 - 260' UNIT - 66936				

TABLE OF DEAD LOAD DEFLECTIONS (INCHES)

Span	Point of Deflection	Girder No. 1			Girder No. 2			Girder No. 3			Girder No. 4			Girder No. 5			Girder No. 6			Girder No. 7			Girder No. 8		
		Structural Steel	Structural Steel + Slab	Structural Steel + Slab + Rail + Sidewalk	Structural Steel	Structural Steel + Slab	Structural Steel + Slab + Rail + Sidewalk	Structural Steel	Structural Steel + Slab	Structural Steel + Slab + Rail + Sidewalk	Structural Steel	Structural Steel + Slab	Structural Steel + Slab + Rail + Sidewalk	Structural Steel	Structural Steel + Slab	Structural Steel + Slab + Rail + Sidewalk	Structural Steel	Structural Steel + Slab	Structural Steel + Slab + Rail + Sidewalk	Structural Steel	Structural Steel + Slab	Structural Steel + Slab + Rail + Sidewalk	Structural Steel	Structural Steel + Slab	Structural Steel + Slab + Rail + Sidewalk
Support	0	0	0	0	0	0	0	0	0	0	0	0	0	0	0	0	0	0	0	0	0	0	0	0	0
1	0.1	0.048	0.218	0.056	0.052	0.259	0.036	0.053	0.281	0.026	0.055	0.297	0.023	0.056	0.306	0.021	0.058	0.309	0.021	0.059	0.296	0.023	0.060	0.277	0.029
	0.2	0.088	0.397	0.106	0.094	0.469	0.067	0.097	0.512	0.049	0.100	0.542	0.042	0.102	0.554	0.039	0.106	0.563	0.040	0.107	0.538	0.043	0.110	0.502	0.053
	0.3	0.114	0.508	0.137	0.121	0.600	0.088	0.127	0.655	0.064	0.131	0.705	0.055	0.133	0.721	0.050	0.135	0.716	0.050	0.139	0.693	0.056	0.143	0.651	0.070
	0.4	0.124	0.547	0.150	0.131	0.644	0.096	0.136	0.715	0.068	0.141	0.758	0.058	0.144	0.778	0.053	0.147	0.775	0.053	0.150	0.748	0.060	0.156	0.704	0.077
	0.5	0.116	0.506	0.139	0.123	0.600	0.090	0.128	0.670	0.063	0.132	0.714	0.054	0.135	0.731	0.049	0.138	0.727	0.049	0.141	0.699	0.056	0.146	0.650	0.071
	0.6	0.095	0.405	0.111	0.099	0.480	0.072	0.104	0.544	0.051	0.107	0.577	0.043	0.110	0.600	0.039	0.112	0.590	0.038	0.115	0.570	0.044	0.118	0.520	0.057
	0.7	0.066	0.275	0.074	0.069	0.331	0.048	0.071	0.373	0.033	0.073	0.398	0.028	0.075	0.411	0.025	0.078	0.412	0.025	0.079	0.389	0.028	0.081	0.350	0.037
	0.8	0.035	0.144	0.037	0.036	0.174	0.022	0.037	0.200	0.015	0.039	0.217	0.013	0.040	0.226	0.012	0.040	0.220	0.011	0.042	0.210	0.013	0.043	0.183	0.018
	0.9	0.011	0.044	0.010	0.011	0.054	0.005	0.011	0.063	0.003	0.011	0.070	0.003	0.011	0.072	0.002	0.013	0.076	0.003	0.013	0.066	0.002	0.013	0.053	0.003
Support	0	0	0	0	0	0	0	0	0	0	0	0	0	0	0	0	0	0	0	0	0	0	0	0	0
2	0.1	0.014	0.067	0.031	0.015	0.065	0.019	0.015	0.059	0.015	0.017	0.062	0.014	0.018	0.063	0.013	0.018	0.067	0.013	0.019	0.074	0.014	0.017	0.079	0.015
	0.2	0.048	0.216	0.088	0.053	0.233	0.057	0.056	0.236	0.044	0.056	0.230	0.037	0.059	0.238	0.035	0.060	0.244	0.035	0.060	0.251	0.037	0.060	0.268	0.044
	0.3	0.085	0.384	0.148	0.094	0.420	0.099	0.099	0.433	0.074	0.100	0.430	0.062	0.105	0.449	0.058	0.108	0.463	0.058	0.110	0.476	0.064	0.109	0.480	0.074
	0.4	0.115	0.522	0.194	0.127	0.576	0.134	0.134	0.599	0.098	0.139	0.610	0.082	0.141	0.616	0.075	0.145	0.632	0.075	0.148	0.645	0.084	0.148	0.647	0.099
	0.5	0.129	0.594	0.216	0.138	0.629	0.146	0.146	0.655	0.106	0.152	0.673	0.090	0.155	0.684	0.081	0.158	0.697	0.080	0.163	0.715	0.091	0.166	0.715	0.109
	0.6	0.118	0.550	0.197	0.126	0.574	0.135	0.133	0.595	0.099	0.139	0.615	0.083	0.143	0.630	0.075	0.146	0.643	0.075	0.149	0.649	0.083	0.151	0.642	0.100
	0.7	0.089	0.421	0.149	0.094	0.425	0.104	0.098	0.431	0.076	0.103	0.448	0.064	0.106	0.459	0.058	0.108	0.473	0.057	0.112	0.481	0.062	0.114	0.473	0.076
	0.8	0.051	0.248	0.088	0.053	0.235	0.061	0.055	0.235	0.046	0.059	0.247	0.039	0.059	0.248	0.034	0.060	0.258	0.033	0.061	0.259	0.036	0.065	0.261	0.044
	0.9	0.017	0.087	0.032	0.016	0.072	0.022	0.016	0.064	0.017	0.017	0.066	0.015	0.020	0.076	0.014	0.020	0.078	0.013	0.020	0.078	0.013	0.022	0.082	0.016
Support	0	0	0	0	0	0	0	0	0	0	0	0	0	0	0	0	0	0	0	0	0	0	0	0	0
3	0.1	0.009	0.030	0.008	0.010	0.048	0.003	0.012	0.062	0.003	0.012	0.067	0.002	0.011	0.068	0.002	0.012	0.067	0.002	0.011	0.061	0.003	0.010	0.054	0.004
	0.2	0.031	0.124	0.038	0.037	0.172	0.020	0.039	0.197	0.014	0.040	0.212	0.013	0.039	0.211	0.011	0.041	0.215	0.013	0.041	0.203	0.014	0.038	0.186	0.018
	0.3	0.059	0.250	0.075	0.068	0.319	0.043	0.073	0.365	0.031	0.075	0.389	0.027	0.075	0.401	0.025	0.076	0.392	0.025	0.077	0.381	0.029	0.076	0.361	0.038
	0.4	0.088	0.382	0.114	0.100	0.474	0.069	0.106	0.530	0.047	0.109	0.565	0.041	0.110	0.580	0.039	0.113	0.581	0.040	0.113	0.557	0.045	0.113	0.537	0.058
	0.5	0.109	0.480	0.140	0.121	0.581	0.087	0.130	0.657	0.061	0.134	0.699	0.053	0.137	0.719	0.049	0.138	0.713	0.049	0.140	0.694	0.057	0.140	0.665	0.072
	0.6	0.117	0.523	0.149	0.129	0.626	0.095	0.138	0.700	0.066	0.143	0.745	0.057	0.145	0.764	0.052	0.148	0.769	0.053	0.150	0.751	0.062	0.150	0.716	0.077
	0.7	0.108	0.488	0.136	0.119	0.581	0.088	0.128	0.653	0.062	0.132	0.694	0.054	0.134	0.708	0.049	0.137	0.711	0.049	0.138	0.697	0.057	0.139	0.665	0.071
	0.8	0.084	0.380	0.104	0.092	0.450	0.067	0.098	0.505	0.048	0.102	0.533	0.041	0.104	0.548	0.038	0.105	0.547	0.037	0.108	0.547	0.044	0.109	0.519	0.055
	0.9	0.046	0.210	0.056	0.050	0.247	0.036	0.054	0.280	0.027	0.056	0.293	0.023	0.056	0.299	0.021	0.058	0.304	0.021	0.059	0.297	0.023	0.059	0.284	0.029
Support	0	0	0	0	0	0	0	0	0	0	0	0	0	0	0	0	0	0	0	0	0	0	0	0	0

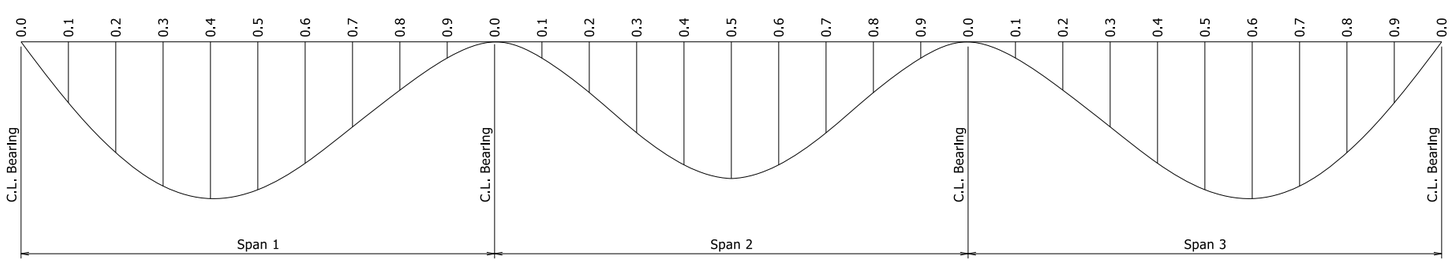

DEAD LOAD DEFLECTION DIAGRAM

No Scale

Camber for Dead Load Deflection +/- ¼" tolerance. Deflections shown are along C.L. Girder from a plane from C.L. Bearing to C.L. Bearing.

STATE OF ARKANSAS
LICENSED PROFESSIONAL ENGINEER
No. 9235
9/22/23
CHARLES R. ELLIS

BRIDGE ENGINEER

SHEET 4 OF 6
DETAILS OF 260'-0"
CONTINUOUS PLATE GIRDER UNIT
VACHE GRASSE CREEK (SITE 5)

ROUTE SEC.

ARKANSAS STATE HIGHWAY COMMISSION

LITTLE ROCK, ARK.

DRAWN BY: WAC DATE: 07/2023
CHECKED BY: YG DATE: 08/2023
DESIGNED BY: JSQ DATE: 06/2023
FILENAME: b040861x5_s1.dgn
SCALE: As Noted

BRIDGE NO. 07645 DRAWING NO. 66936

PRINT DATE: 9/22/2023

DATE REVISED	DATE REVISED	FED. RD. DIST. NO.	STATE	JOB NO.	SHEET NO.	TOTAL SHEETS
		6	ARK.	040861	197	291
		07645 - 260' UNIT - 66937				

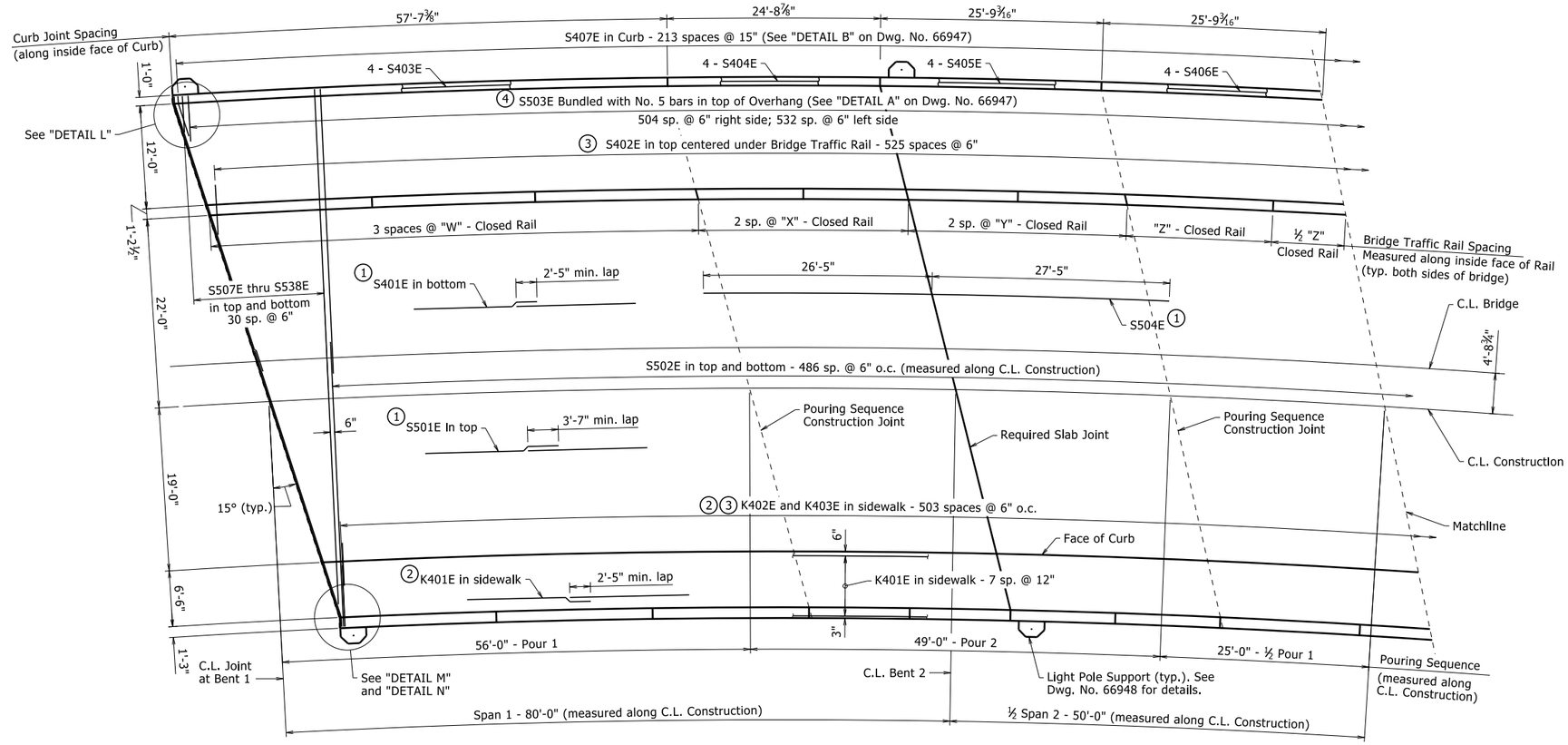

REINFORCING PLAN

⅛" = 1'-0"

For additional details of Bridge Traffic Rail, see Std. Dwg. No. 55070.

For Bar List, see Dwg. No. 66938.

C.L. Construction is on a 5°00'00" curve right. C.L. Girder and all longitudinal reinforcing steel shall be placed on curves concentric with C.L. Construction. All transverse reinforcing steel shall be placed on lines radial to C.L. Construction.

Skew is measured at C.L. Joint for End Bents and at C.L. Bent for Intermediate Bents.

1. Placed as shown in "TYPICAL ROADWAY SECTION" on Dwg. No. 66933.
2. Placed as shown in "SIDEWALK DETAIL" on Dwg. No. 66947.
3. Measured along inside Face of Bridge Traffic Rail.
4. Measured along inside Face of Curb.

LIGHT POLE SUPPORT LOCATIONS

Looking Ahead Station
Station measured along C.L. Const. at C.L. Support

Left Side	Right Side
521+07.72	521+24.61
521+88.28	522+04.56
522+83.44	522+99.43
523+57.30	523+85.35

BRIDGE TRAFFIC RAILING LENGTHS

Looking Ahead Station

Left Side			
"W"	"X"	"Y"	"Z"
18'-11⅞"	12'-2¾"	12'-8⅞"	16'-11¹³⁄₁₆"
Right Side			
"W"	"X"	"Y"	"Z"
18'-2⁹⁄₁₆"	11'-8¹³⁄₁₆"	12'-2¹¹⁄₁₆"	16'-3⁹⁄₁₆"

TABLE OF VARIABLES
BRIDGE TRAFFIC RAILING (TYPE SSTR36)

Closed Rail Panels		
Panel Length	"A"	R4XXE Bar
11'-8¹³⁄₁₆"	23	R409E
12'-2¹¹⁄₁₆"	24	R405E
12'-2¾"	24	R405E
12'-8⅞"	25	R406E
16'-3⁹⁄₁₆"	32	R410E
16'-11¹³⁄₁₆"	33	R407E
18'-2⁹⁄₁₆"	36	R408E
18'-11⅞"	37	R404E

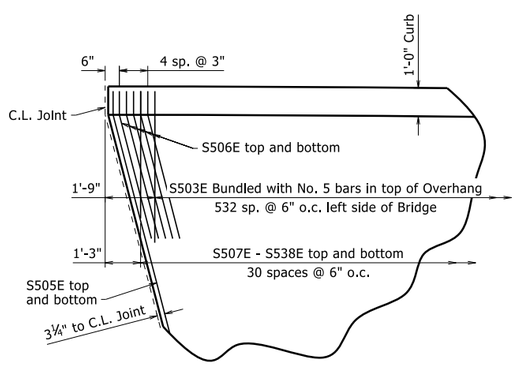

DETAIL L

⅜" = 1'-0"

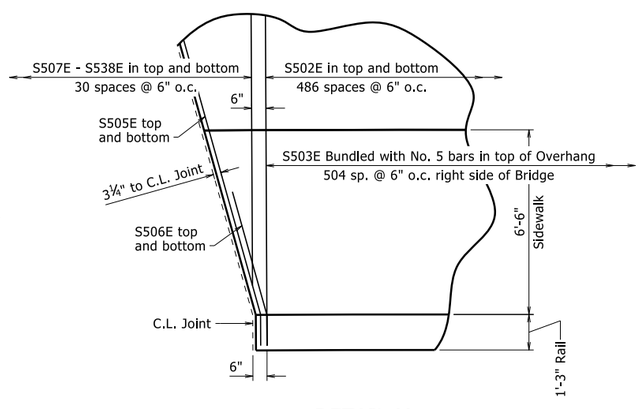

DETAIL M

⅜" = 1'-0"

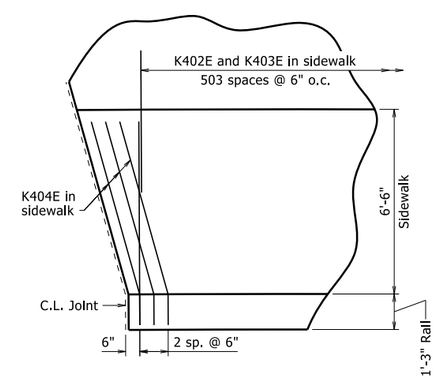

DETAIL N

⅜" = 1'-0"

STATE OF ARKANSAS
LICENSED PROFESSIONAL ENGINEER
No. 9235
9/22/23
CHARLES R. ELLIS

BRIDGE ENGINEER

SHEET 5 OF 6
DETAILS OF 260'-0"
CONTINUOUS PLATE GIRDER UNIT
VACHE GRASSE CREEK (SITE 5)

ROUTE SEC.

ARKANSAS STATE HIGHWAY COMMISSION

LITTLE ROCK, ARK.

DRAWN BY:	WAC	DATE:	07/2023	FILENAME:	b040861x5_s1.dgn
CHECKED BY:	YG	DATE:	08/2023	SCALE:	As Noted
DESIGNED BY:	JSQ	DATE:	06/2023		

BRIDGE NO. 07645 DRAWING NO. 66937

PRINT DATE: 9/22/2023

DATE REVISED	DATE REVISED	FED. RD. DIST. NO.	STATE	JOB NO.	SHEET NO.	TOTAL SHEETS
		6	ARK.	040861	198	291
		07645 - 260' UNIT - 66938				

BAR LIST

Mark	No. Req'd	Length	P.D.
S401E	805	40'-4"	Str.
S402E	526	5'-10"	Str.
S403E	16	29'-11"	Str.
S404E	8	24'-5"	Str.
S405E	8	25'-5"	Str.
S406E	8	27'-0"	Str.
S407E	214	4'-2"	2"
S501E	469	41'-4"	Str.
S502E	974	33'-2"	Str.
S503E	1,038	5'-11"	3¾"
S504E	132	53'-10"	Str.
S505E	8	33'-10"	3¾"
S506E	24	5'-7"	3¾"
S507E - S538E	2 ea.	4'-3" to 60'-0"	Str.
S539E - S570E	2 ea.	4'-1" to 60'-0"	Str.
K401E	56	38'-6"	Str.
K402E	504	5'-6"	3"
K403E	504	7'-2"	Str.
K404E	7	7'-3"	3"
(1) R401E	1,051	6'-4"	2½", 3"
R402E	112	5'-6"	Str.
(1)(2) R403E	534	3'-6"	3", 3¾"
R404E	48	18'-8"	Str.
R405E	64	11'-11"	Str.
R406E	32	12'-5"	Str.
R407E	24	16'-8"	Str.
R408E	48	17'-11"	Str.
R409E	32	11'-5"	Str.
R410E	24	16'-0"	Str.
R411E	506	5'-2"	3¾", 3"
L401E	32	7'-4"	3"
L402E	16	4'-10"	3"
L403E	16	1'-9"	3"
L701E	20	11'-6"	5¼"
L702E	20	10'-10"	5¼"

Bending Diagrams

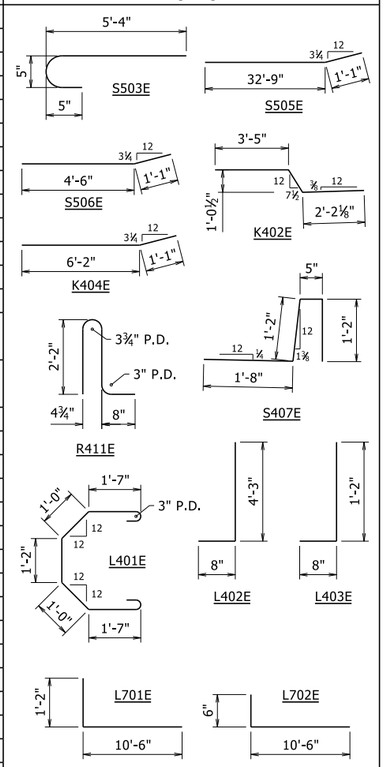

(1) See Std. Dwg. No. 55070 for additional details.

(2) Adjust bars to fit in railing adjacent to Shared Use Path near Full-Depth Rail Joints.

All bars designated with an "E" suffix are to be epoxy coated. Dimensions are out to out of bars.

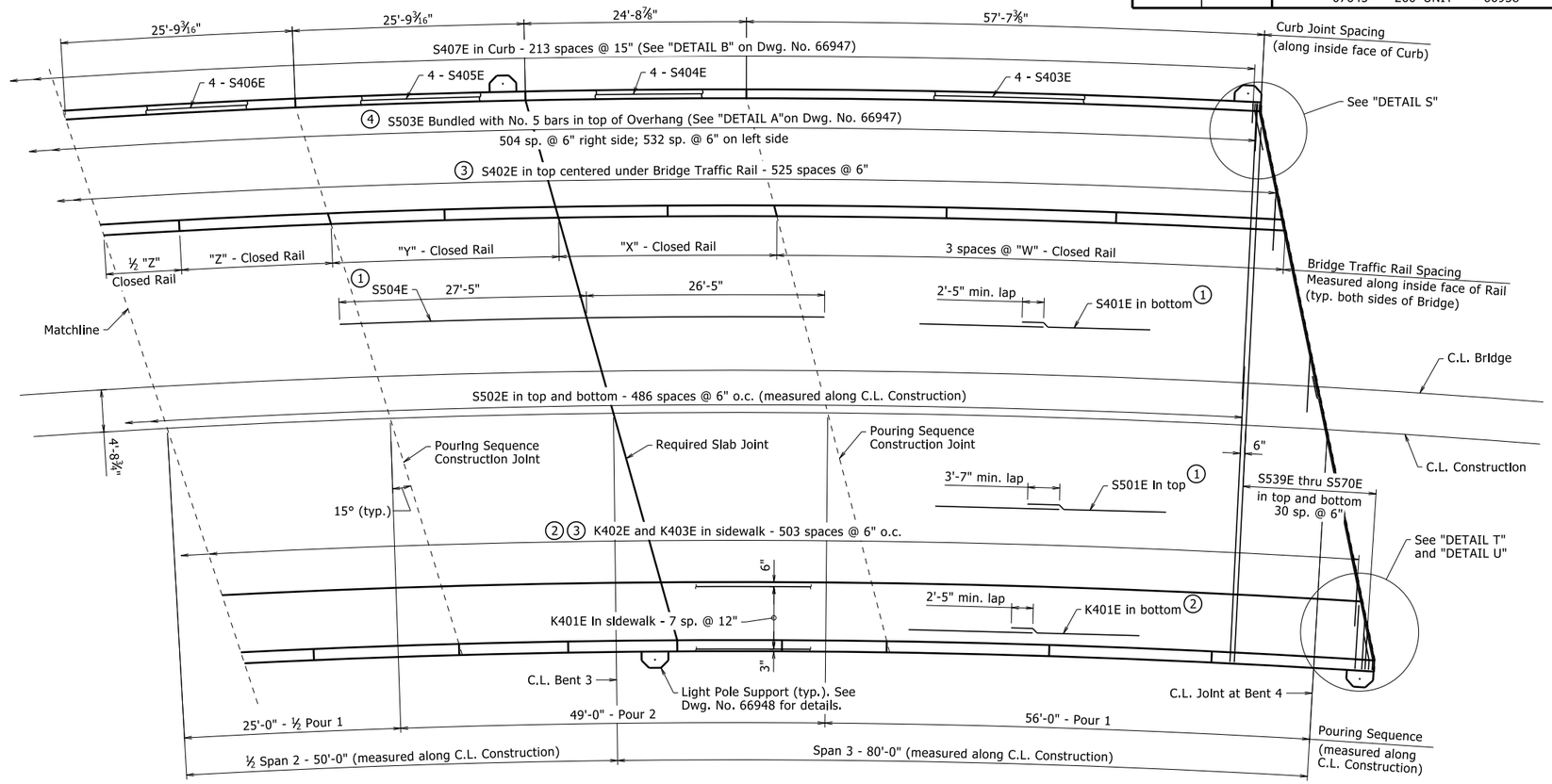

REINFORCING PLAN

⅛" = 1'-0"

(1) Placed as shown in "TYPICAL ROADWAY SECTION" on Dwg. No. 66933.

(2) Placed as shown in "SIDEWALK DETAIL" on Dwg. No. 66947.

(3) Measured along inside face of Bridge Traffic Rail.

(4) Measured along inside face of Curb.

For additional details of Bridge Traffic Rail, see Std. Dwg. No. 55070.

For variables W, X, Y, and Z, see "TABLE OF VARIABLES" on Dwg. No. 66937.

C.L. Construction is on a 5°00'00" curve right. C.L. Girder and all longitudinal reinforcing steel shall be placed on curves concentric with C.L. Construction. All transverse reinforcing steel shall be placed parallel to radial lines along C.L. Construction.

Skew is measured at C.L. Joint for End Bents and at C.L. Bent for Intermediate Bents.

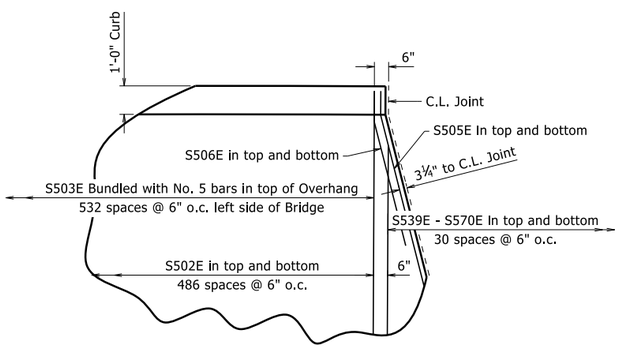

DETAIL S

⅜" = 1'-0"

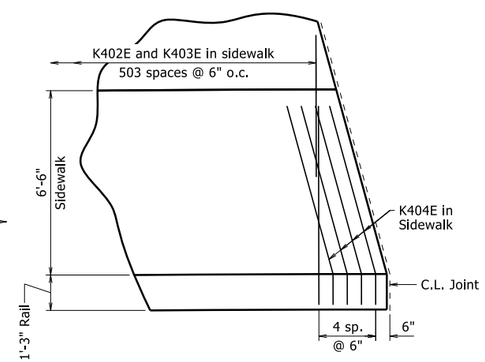

DETAIL T

⅜" = 1'-0"

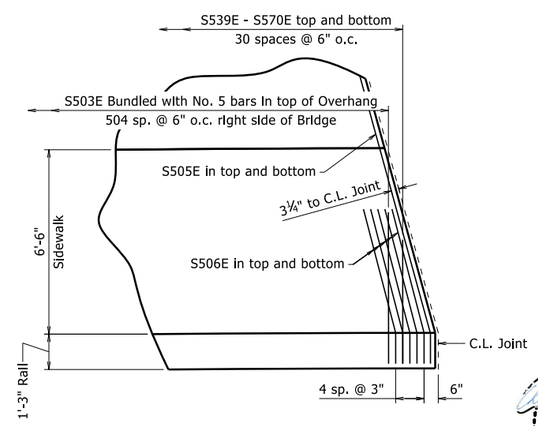

DETAIL U

⅜" = 1'-0"

STATE OF ARKANSAS
LICENSED PROFESSIONAL ENGINEER
No. 9235
9/22/23
CHARLES R. ELLIS

BRIDGE ENGINEER

SHEET 6 OF 6
DETAILS OF 260'-0"
CONTINUOUS PLATE GIRDER UNIT
VACHE GRASSE CREEK (SITE 5)

ROUTE SEC.

ARKANSAS STATE HIGHWAY COMMISSION

LITTLE ROCK, ARK.

DRAWN BY:	WAC	DATE:	07/2023	FILENAME:	b040861x5_s1.dgn
CHECKED BY:	YG	DATE:	08/2023	SCALE:	As Noted
DESIGNED BY:	JSQ	DATE:	06/2023		

BRIDGE NO. 07645 DRAWING NO. 66938

PRINT DATE: 9/22/2023

DATE REVISED	DATE REVISED	FED. RD. DIST. NO.	STATE	JOB NO.	SHEET NO.	TOTAL SHEETS
		6	ARK.	040861	199	291
		07641-07645-COMMON DETAILS END BENTS-66939				

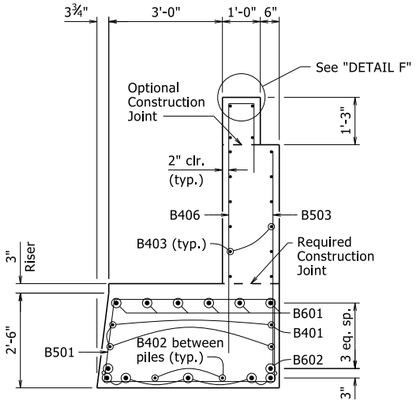

SECTION A-A

Use "SECTION A-A" with
Bridge No. 07641 Bent 1
Bridge No. 07641 Bent 6
Bridge No. 07644 Bent 1
Bridge No. 07644 Bent 6

½" = 1'-0"

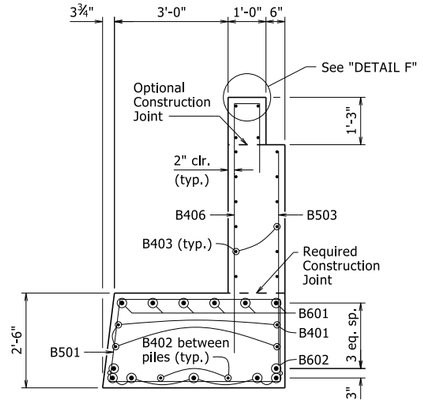

SECTION B-B

½" = 1'-0"

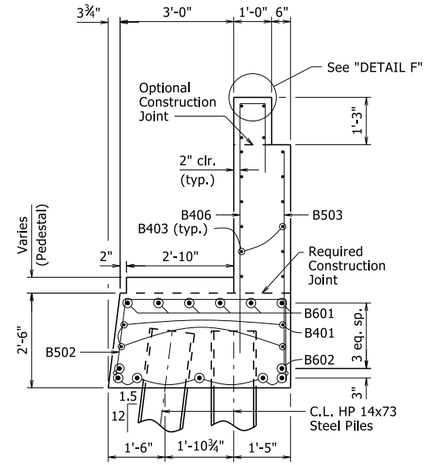

SECTION C-C

½" = 1'-0"

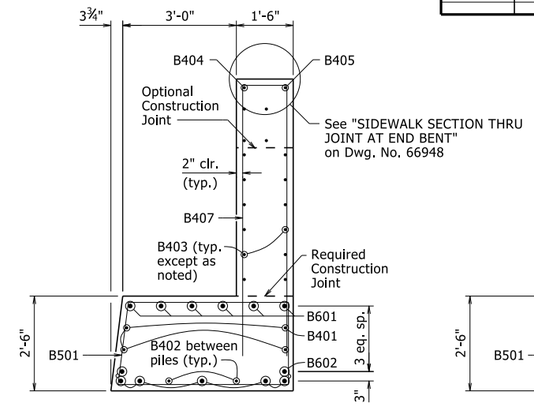

SECTION D-D

½" = 1'-0"

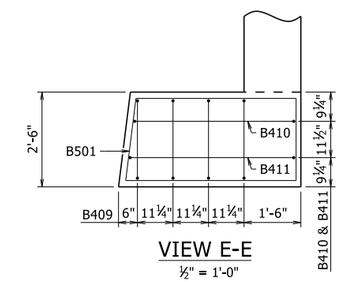

VIEW E-E

½" = 1'-0"

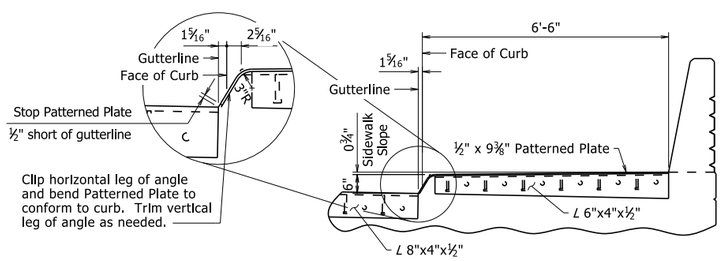

SIDEWALK & CURB DETAIL

NO SCALE

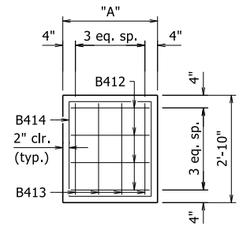

PEDESTAL PLAN

½" = 1'-0"

	"A"
Bridge No. 07641 Bents 1 & 6	2'-6"
Bridge No. 07642 Bents 1 & 6	2'-6"
Bridge No. 07643 Bents 1 & 4	2'-6"
Bridge No. 07644 Bents 1 & 6	3'-0"
Bridge No. 07645 Bents 1 & 4	3'-0"

NOTES: Transverse spacing between vertical anchor studs and vent holes shall be 6".

Concrete shall be hand packed under the joint armor.

For additional joint details, see Std. Dwg. No. 55008.

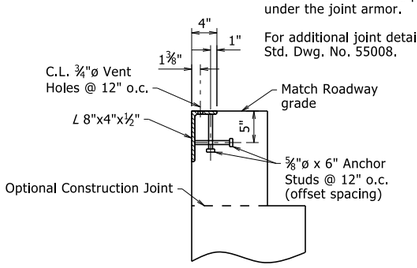

DETAIL F

NO SCALE

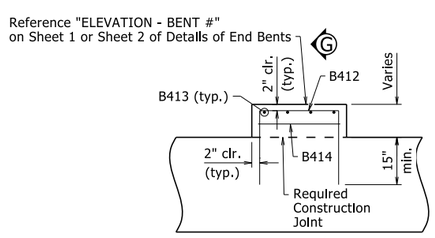

TYPICAL PEDESTAL DETAILS

LOOKING BACK

½" = 1'-0"

Reference "ELEVATION - BENT #" on Sheet 1 or Sheet 2 of Details of End Bents

NOTES:

Riser not shown.

Place one B414 tie on pedestals 9" in height or less, and place two B414 ties on pedestals greater than 9" in height.

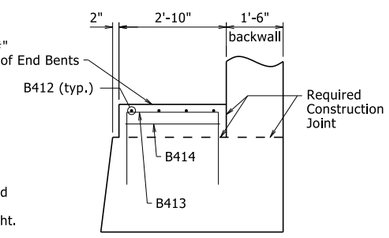

SECTION G-G

½" = 1'-0"

GENERAL NOTES:

For General Notes, see Std. Dwg. No. 55006.

For Joint Details see Std. Dwg. No. 55008 & "SIDEWALK SECTION THRU JOINT AT END BENT" on Dwg No. 66947.

Structural steel shall be ASTM A709, Gr. 50W and shall be paid for as "Structural Steel in Plate Girder Spans (A709, Gr. 50W)" or "Structural Steel in Beam Spans (A709, Gr. 50W)".

All piling shall be Grade 50. For details of steel piling, see Std. Dwg. No. 55020.

Class 2 Protective Surface Treatment shall be applied to the top of the backwall, sidewalk surface (including curbing), shared use path surface and to the roadway face and top of the bridge traffic rail. Class 3 Textured Coating Finish shall be applied to all areas as specified in Special Provision "TEXTURED COATING FINISH" and in accordance with Subsection 802.19(b)(3).

No portion of the backwall shall be poured before the beams/girders are in place. The portion of the backwall above the optional construction joint at the paving bracket shall not be placed until the adjacent deck pour has been made. Refer to the "EXPANSION DEVICE INSTALLATION AT END BENTS" note on Std. Dwg. No. 55008. No heavy construction equipment shall be allowed within 10' of the backwall before the deck concrete placement for the adjacent span has been completed.

For additional information, see Layout.

STATE OF ARKANSAS
11 28 23 10:00 AM
LICENSED PROFESSIONAL ENGINEER
No. 9235
9/22/23
CHARLES R. ELLIS

BRIDGE ENGINEER

SHEET 1 OF 4
COMMON DETAILS OF END BENTS
HEARTSILL CREEK & VACHE GRASSE CREEK

ROUTE SEC.

ARKANSAS STATE HIGHWAY COMMISSION

LITTLE ROCK, ARK.

DRAWN BY: CGP DATE: 08/30/2023 FILENAME: b040861_c2.dgn
CHECKED BY: JYP DATE: 09/05/2023 SCALE: AS NOTED
DESIGNED BY: PGT DATE: 08/2023

BRIDGE NO. 07641-07645 DRAWING NO. 66939

PRINT DATE: 9/22/2023

DATE REVISED	DATE REVISED	FED. RD. DIST. NO.	STATE	JOB NO.	SHEET NO.	TOTAL SHEETS
		6	ARK.	040861	200	291
		07641-07645-COMMON DETAILS END BENTS-66940				

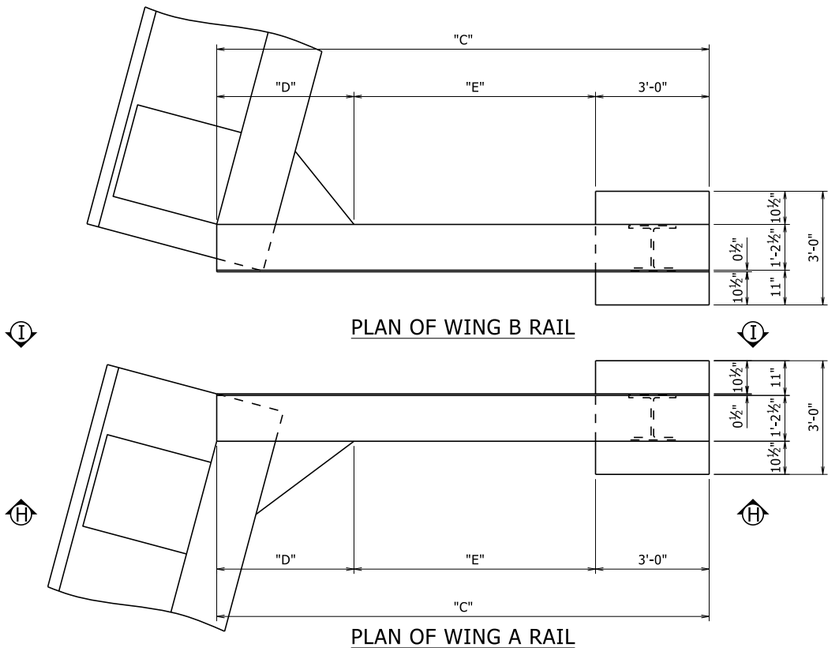

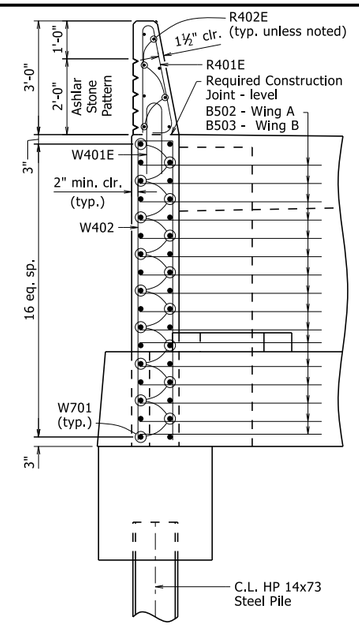

VIEW J-J

NOTE:

The wings are concentric to C.L. Construction on Bridge Nos. 07642, 07643, 07644 & 07645

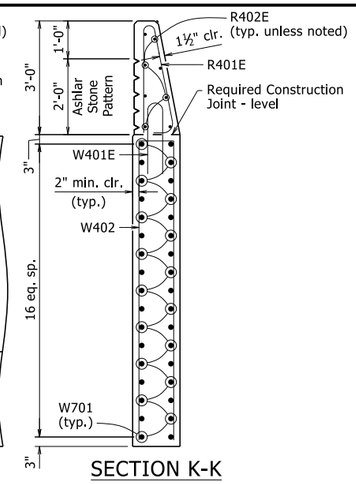

SECTION K-K

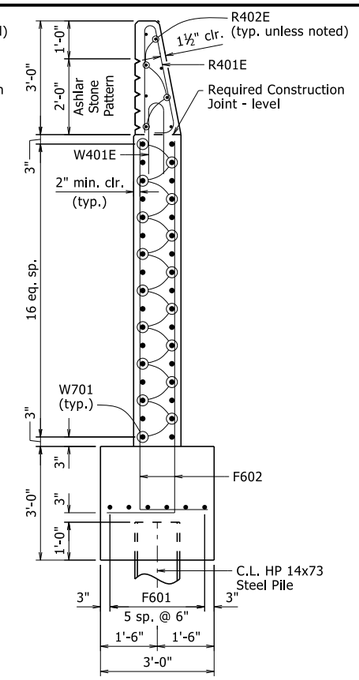

SECTION L-L

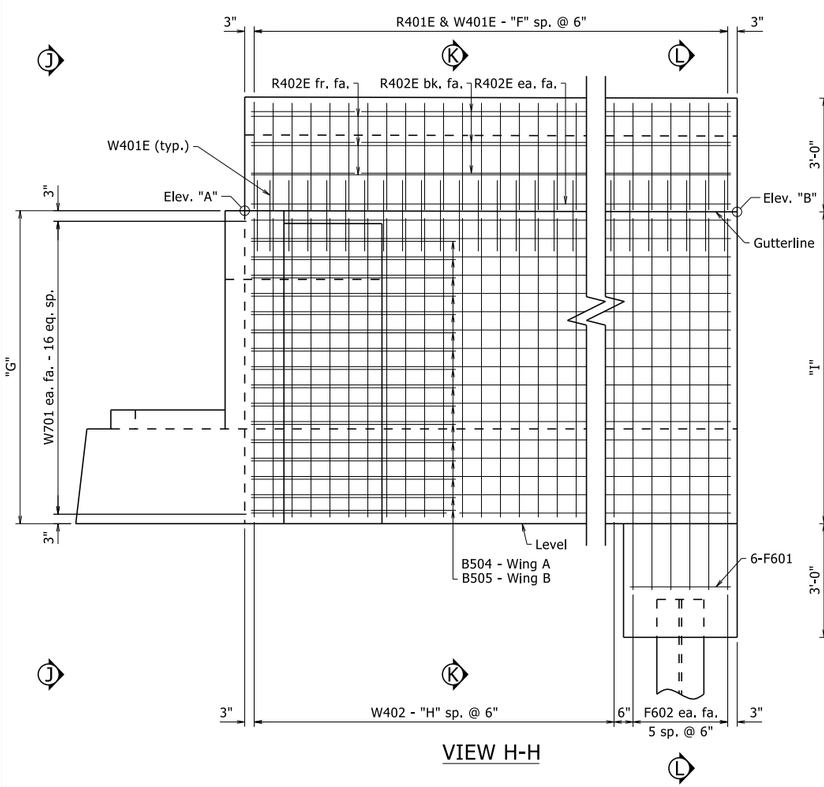

VIEW H-H

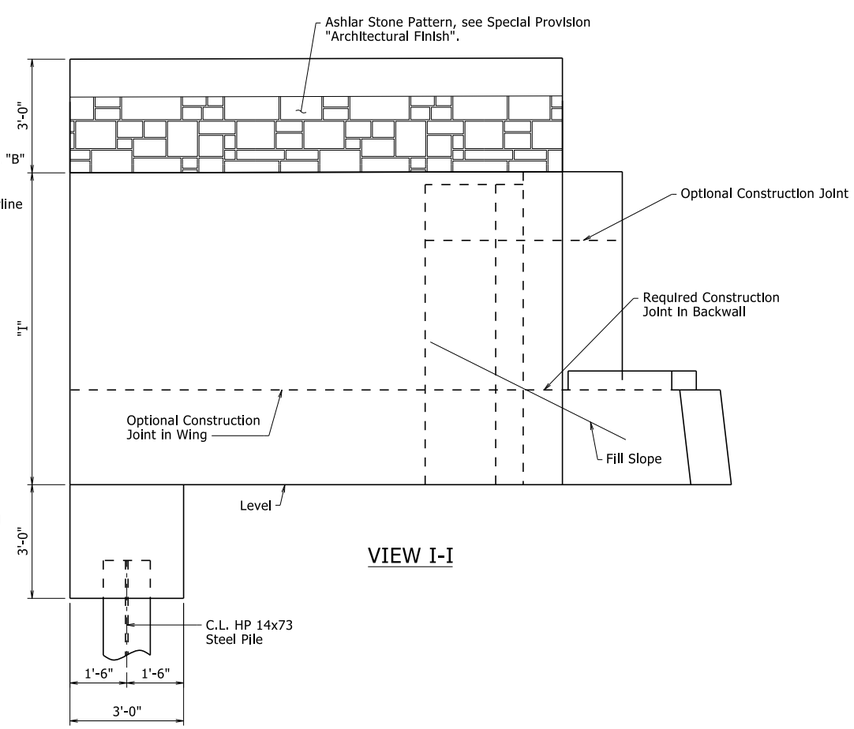

VIEW I-I

			Elev. "A"	Elev. "B"	"C"	"D"	"E"	"F"	"G"	"H"	"I"
Bridge No. 07641	Bent 1	Wing A	496.53	496.50	13'-0"	3'-7½"	6'-4½"	25	8'-2½"	19	8'-2⅛"
		Wing B	496.59	496.55	13'-0"	3'-7½"	6'-4½"	25	8'-3¼"	19	8'-2¾"
	Bent 6	Wing A	497.69	497.72	13'-0"	3'-7½"	6'-4½"	25	8'-3⅜"	19	8'-3¾"
		Wing B	497.63	497.67	13'-0"	3'-7½"	6'-4½"	25	8'-2⅝"	19	8'-3⅛"
Bridge No. 07642	Bent 1	Wing A	499.53	499.54	17'-0"	4'-6 9/16"	9'-5 1/16"	33	8'-10 5/16"	27	8'-10 7/16"
		Wing B	501.42	501.44	17'-0"	4'-4 15/16"	9'-7 1/16"	33	8'-3 13/16"	27	8'-4 1/16"
	Bent 6	Wing A	498.05	498.05	13'-0"	3'-7½"	6'-4½"	25	8'-3½"	19	8'-2⅞"
		Wing B	499.89	499.89	13'-0"	3'-7½"	6'-4½"	25	8'-9¾"	19	8'-9⅛"
Bridge No. 07643	Bent 1	Wing A	499.92	499.88	13'-0"	3'-7½"	6'-4½"	25	8'-10 1/16"	19	8'-9 9/16"
		Wing B	498.48	498.43	13'-0"	3'-7½"	6'-4½"	25	9'-2⅝"	19	9'-2"
	Bent 4	Wing A	497.88	497.59	13'-0"	3'-7½"	6'-4½"	25	9'-1 9/16"	19	8'-9"
		Wing B	499.71	499.49	13'-0"	3'-7½"	6'-4½"	25	8'-10 1/16"	19	8'-6⅜"
Bridge No. 07644	Bent 1	Wing A	496.89	496.60	13'-0"	3'-7½"	6'-4½"	25	8'-1 1/16"	19	7'-9 9/16"
		Wing B	496.30	496.07	13'-0"	3'-7½"	6'-4½"	25	7'-6"	19	7'-3¼"
	Bent 6	Wing A	497.92	497.96	13'-0"	3'-7½"	6'-4½"	25	7'-5¼"	19	7'-5¾"
		Wing B	498.76	498.80	13'-0"	3'-7½"	6'-4½"	25	8'-3⅜"	19	8'-3⅞"
Bridge No. 07645	Bent 1	Wing A	497.97	498.01	13'-0"	3'-7½"	6'-4½"	25	8'-9⅝"	19	8'-10⅛"
		Wing B	498.67	498.70	13'-0"	3'-7½"	6'-4½"	25	7'-9⅝"	19	7'-10"
	Bent 4	Wing A	497.59	497.45	13'-0"	3'-7½"	6'-4½"	25	7'-1 9/16"	19	6'-11⅞"
		Wing B	496.76	496.59	13'-0"	3'-7½"	6'-4½"	25	8'-9⅜"	19	8'-7 5/16"

STATE OF ARKANSAS
LICENSED PROFESSIONAL ENGINEER
No. 9235
9/22/23
CHARLES R. ELLIS
BRIDGE ENGINEER

SHEET 2 OF 4
COMMON DETAILS OF END BENTS
HEARTSILL CREEK & VACHE GRASSE CREEK

ROUTE SEC.

ARKANSAS STATE HIGHWAY COMMISSION

LITTLE ROCK, ARK.

DRAWN BY: CGP DATE: 08/30/2023 FILENAME: b040861_c2.dgn
CHECKED BY: JYP DATE: 09/05/2023 SCALE: 1/2" = 1'-0"
DESIGNED BY: PGT DATE: 08/2023

BRIDGE NO. 07641-07645 DRAWING NO. 66940

PRINT DATE: 9/22/2023

DATE REVISED	DATE REVISED	FED. RD. DIST. NO.	STATE	JOB NO.	SHEET NO.	TOTAL SHEETS
		6	ARK.	040861	201	291
		07641-07645-COMMON DETAILS END BENTS-66941				

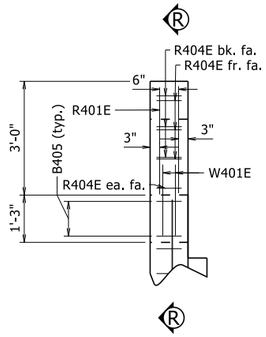

ELEVATION OF BRIDGE TRAFFIC RAIL
(TYPE SSTR36) -SHARED USE PATH

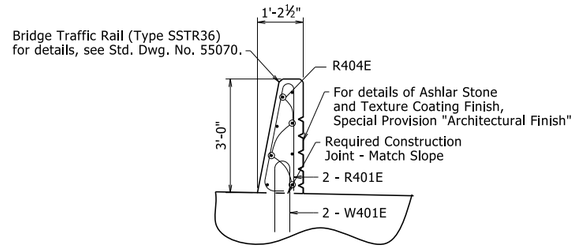

SECTION R-R

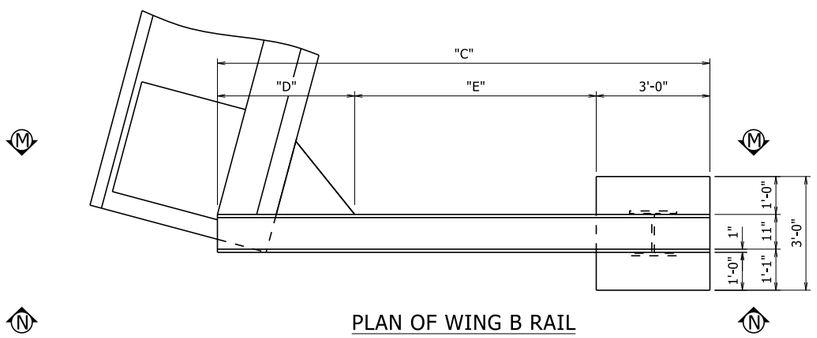

PLAN OF WING B RAIL

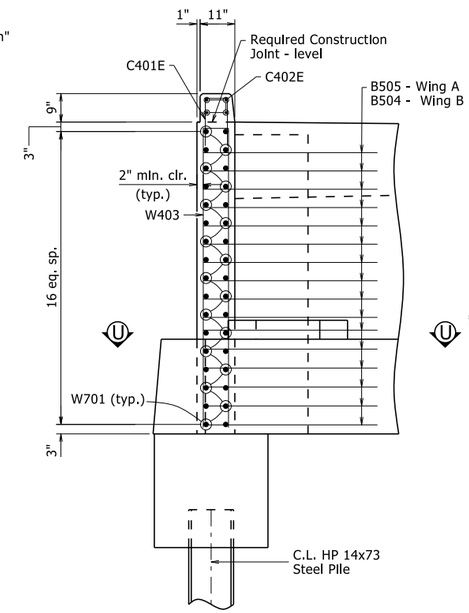

VIEW O-O

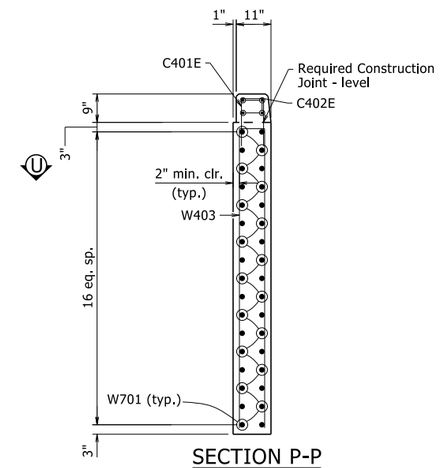

SECTION P-P

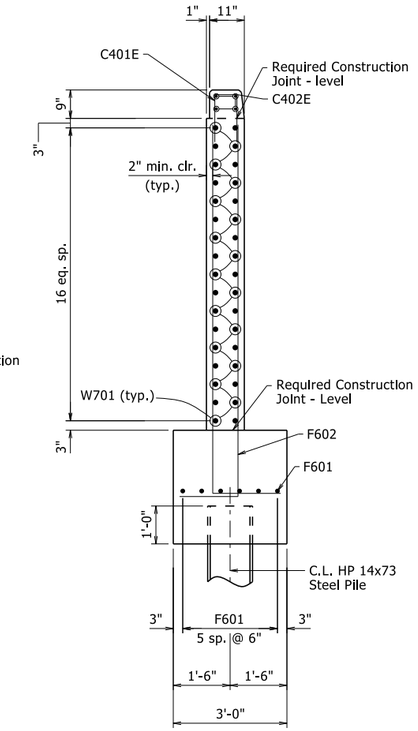

VIEW Q-Q

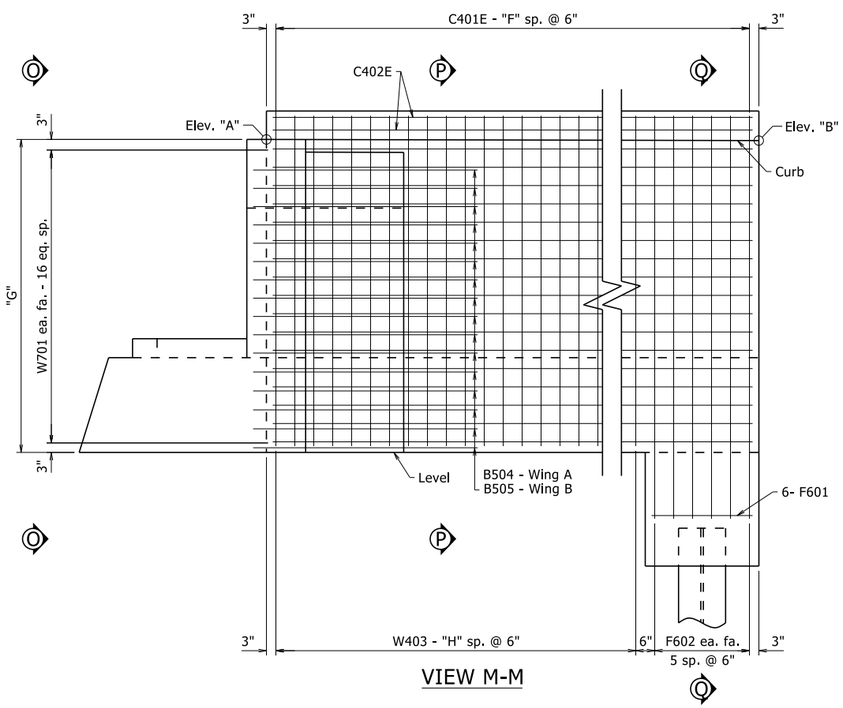

VIEW M-M

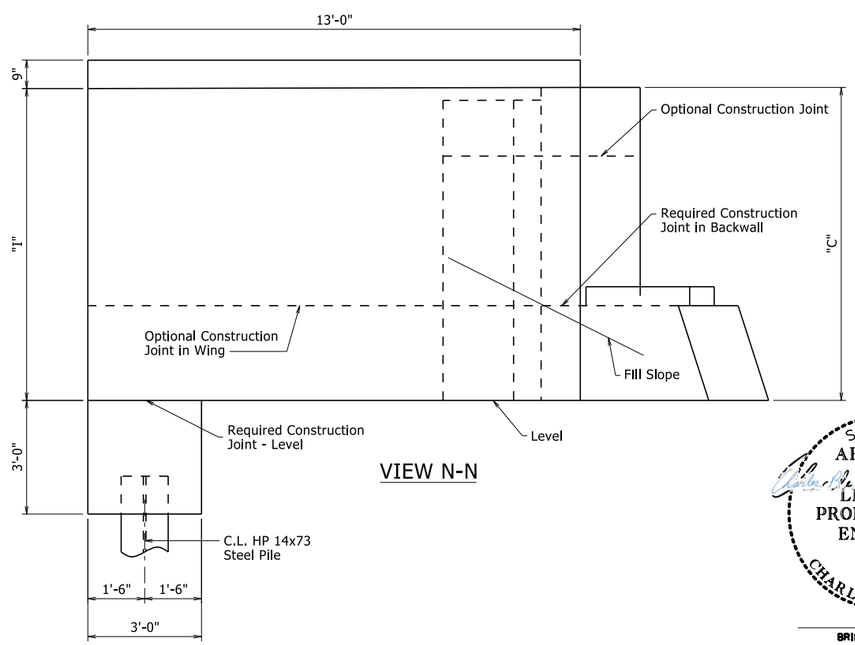

VIEW N-N

STATE OF ARKANSAS
LICENSED PROFESSIONAL ENGINEER
No. 9235
9/22/23
CHARLES R. ELLIS

BRIDGE ENGINEER

SHEET 3 OF 4
COMMON DETAILS OF END BENTS
HEARTSILL CREEK & VACHE GRASSE CREEK

ROUTE SEC.

ARKANSAS STATE HIGHWAY COMMISSION

LITTLE ROCK, ARK.

DRAWN BY:	CGP	DATE:	08/30/2023	FILENAME:	b040861_c2.dgn
CHECKED BY:	JYP	DATE:	09/05/2023	SCALE:	1/2" = 1'-0"
DESIGNED BY:	PGT	DATE:	08/2023		

BRIDGE NO. 07641-07645 DRAWING NO. 66941

PRINT DATE: 9/22/2023

DATE REVISED	DATE REVISED	FED. RD. DIST. NO.	STATE	JOB NO.	SHEET NO.	TOTAL SHEETS
		6	ARK.	040861	202	291
		07641-07645-COMMON DETAILS END BENTS-66942				

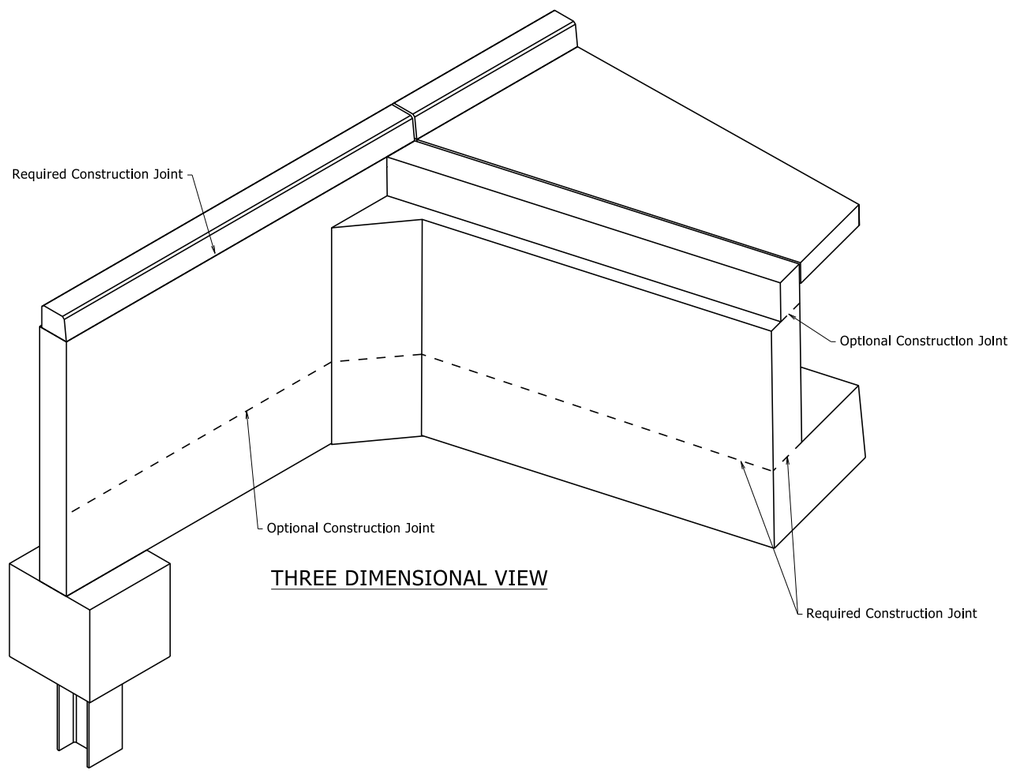

THREE DIMENSIONAL VIEW

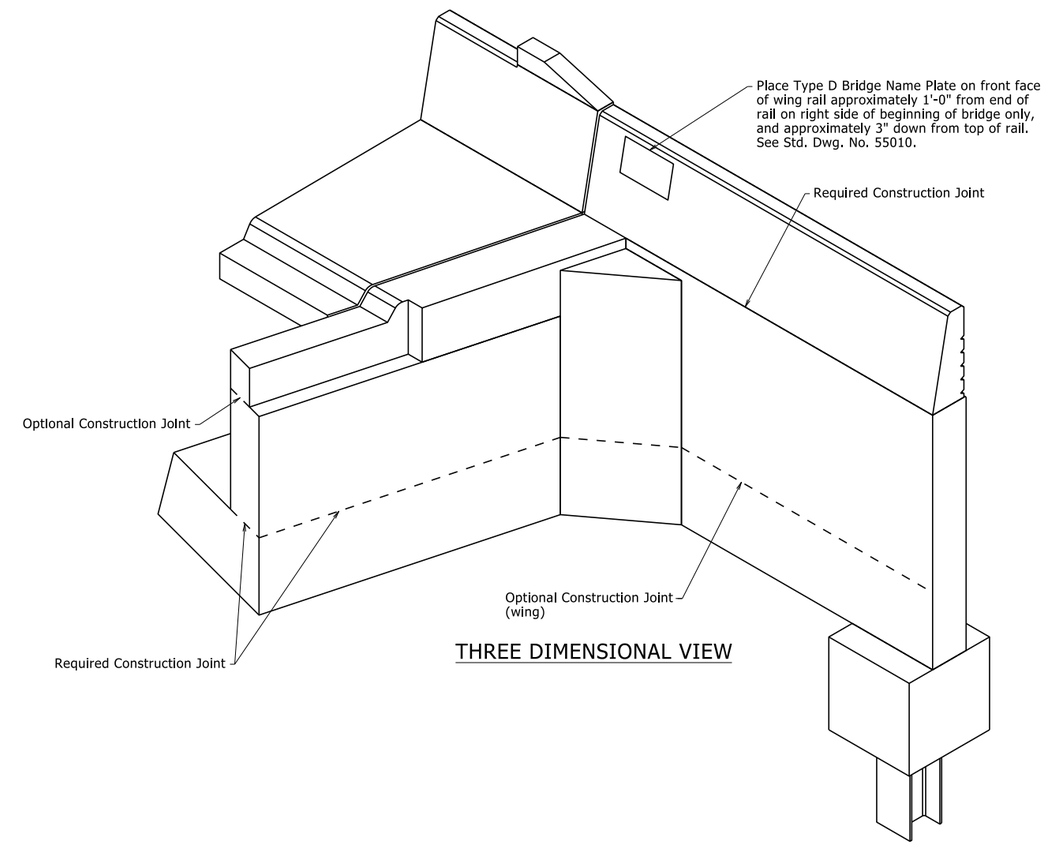

THREE DIMENSIONAL VIEW

STATE OF ARKANSAS
LICENSED PROFESSIONAL ENGINEER
No. 9235
9/22/23
CHARLES R. ELLIS

BRIDGE ENGINEER

SHEET 4 OF 4
COMMON DETAILS OF END BENTS
HEARTSILL CREEK & VACHE GRASSE CREEK

ROUTE SEC.

ARKANSAS STATE HIGHWAY COMMISSION

LITTLE ROCK, ARK.

DRAWN BY: CGP DATE: 08/30/2023 FILENAME: b040861_c2.dgn
CHECKED BY: JYP DATE: 09/05/2023 SCALE: NO SCALE
DESIGNED BY: PGT DATE: 08/2023

BRIDGE NO. 07641-07645 DRAWING NO. 66942

PRINT DATE: 9/22/2023

DATE REVISED	DATE REVISED	FED. RD. DIST. NO.	STATE	JOB NO.	SHEET NO.	TOTAL SHEETS
		6	ARK.	040861	203	291
		07641-07645-COMMON DETAILS INT. BENTS-66943				

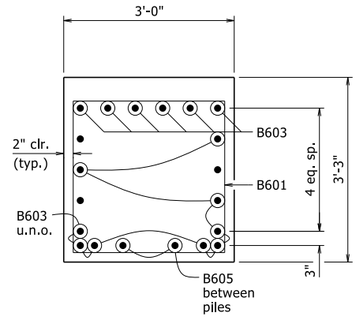

SECTION A-A

Use "SECTION A-A" with
Bridge No. 07641 Bents 2-5 &
Bridge No. 07644 Bents 2-5

¾" = 1'-0"

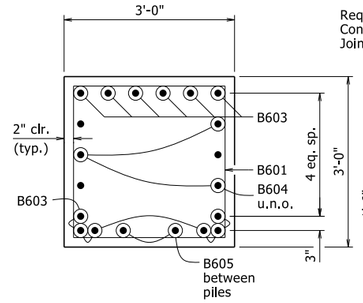

SECTION B-B

¾" = 1'-0"

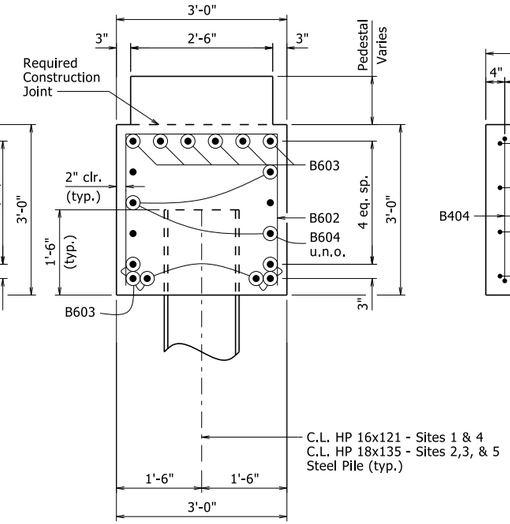

SECTION C-C

¾" = 1'-0"

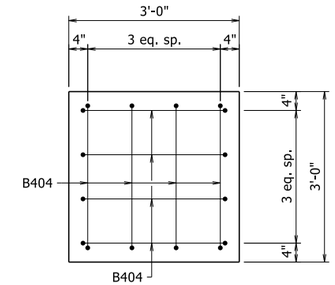

VIEW D-D

¾" = 1'-0"

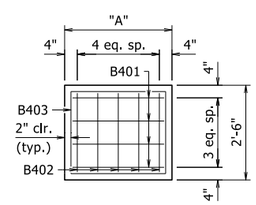

PEDESTAL PLAN

½" = 1'-0"

NOTES:

Riser not shown.

Place one B403 tie on pedestals 9" in height or less, and place two B403 ties on pedestals greater than 9" in height.

	"A"
Bridge No. 07641 Bents 2-5	2'-10"
Bridge No. 07642 Bents 2-5	3'-0"
Bridge No. 07643 Bents 2 & 3	3'-3"
Bridge No. 07644 Bents 2-5	2'-10"
Bridge No. 07645 Bents 2 & 3	3'-6"

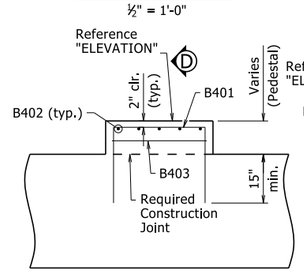

TYPICAL PEDESTAL DETAILS

LOOKING AHEAD

½" = 1'-0"

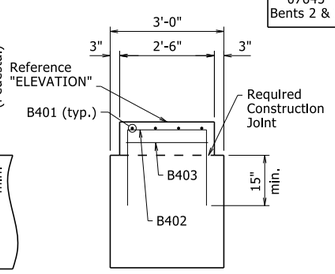

SECTION D-D

½" = 1'-0"

GENERAL NOTES:

For General Notes, see Std. Dwg. No. 55006.

All piling shall be Grade 50. For details of steel piling, see Dwg. No. 66944.

For additional information, see Layout.

STATE OF ARKANSAS
LICENSED PROFESSIONAL ENGINEER
No. 9235
9/22/23
CHARLES R. ELLIS

BRIDGE ENGINEER

COMMON DETAILS OF INTERMEDIATE BENTS
HEARTSILL CREEK & VACHE GRASSE CREEK

ROUTE SEC.

ARKANSAS STATE HIGHWAY COMMISSION

LITTLE ROCK, ARK.

DRAWN BY: CGP DATE: 08/30/2023 FILENAME: b040861_c3.dgn
CHECKED BY: JYP DATE: 09/05/2023 SCALE: AS NOTED
DESIGNED BY: PGT DATE: 08/2023

BRIDGE NO. 07641-07645 DRAWING NO. 66943

PRINT DATE: 9/22/2023

DATE REVISED	DATE REVISED	FED. RD. DIST. NO.	STATE	JOB NO.	SHEET NO.	TOTAL SHEETS
		6	ARK.	040861	204	291
		07641-07645 -		STEEL H-PILES		- 66944

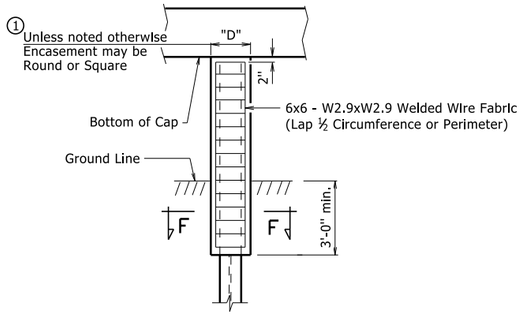

PILE ENCASEMENT DETAIL FOR STEEL H-PILES

(Shown with Encasement to Bottom of Cap)

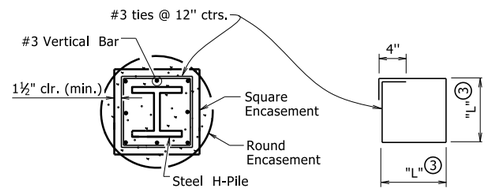

SECTION F-F

① Encasement dimensions shall be sized to maintain a minimum concrete cover of 4" from the H-Pile. Reinforcement shall be sized to provide a minimum concrete cover of 1½" and a minimum clearance of 1¼" from the pile.

② Alternate Pile Encasement Details for Steel H-Piles shall not be used at Bridge No. 07644.

③ Measured out-to-out of bar.

TABLE OF VARIABLES FOR PILE ENCASEMENT

Pile Size	"D" Square Encsmt.	"D" Round Encsmt.	"L" ③
HP14x73	1'-11"	2'-6"	1'-8"
HP16x121	2'-1"	2'-9"	1'-10"
HP18x135	2'-3"	2'-11"	2'-0"

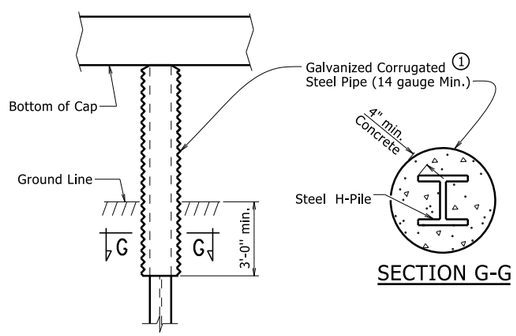

SECTION G-G

② ALTERNATE PILE ENCASEMENT DETAIL FOR STEEL H-PILES

(Shown with Encasement to Bottom of Cap)

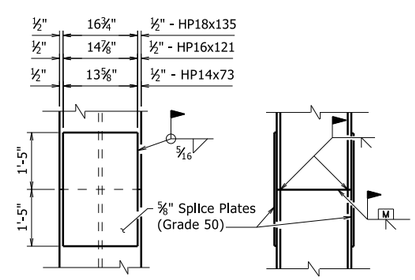

The Contractor may for their own convenience and at their own expense provide as many as three splices per pile. Minimum spacing between splices shall be 5 feet.

TYPICAL SPLICE DETAILS

No Scale

GENERAL NOTES FOR STEEL H-PILES

Steel H-Piles shall conform to ASTM A709, Grade 50.

See Bridge Layout and Bent Details for pile size, estimated length, and for driving information.

Brackets, lugs, cap plates, driving points, splicing and welding shall not be paid for directly, but shall be considered subsidiary to the item "Steel Piling".

H-pile splicers manufactured by Associated Pile and Fitting Corporation, LB Foster Piling, Skyline Steel or equivalent may be used in lieu of the "Typical Splice Details" shown. H-pile splicers shall match the same grade of steel specified for the piling and shall be welded to the pile with a 5/16" fillet weld around the entire perimeter of the splice. Flanges shall be welded with a complete penetration groove weld complying with AASHTO/AWS Joint Designation B-U4a or B-U4b. All welding shall conform to Subsection 807.26.

Approved H-pile driving points shall be required.

GENERAL NOTES FOR H-PILE ENCASEMENTS

See Bridge Layout for additional notes and required location of pile encasements.

All concrete shall be Class S with a minimum 28-day compressive strength, f'c = 3,500 psi. If concrete cannot be placed in the dry, Seal Concrete may be used from top to bottom of encasement.

Reinforcing steel shall be Grade 60 conforming to AASHTO M 31 or M 322, Type A.

Welded Wire Fabric shall conform to AASHTO M 55 or M 221. Galvanized Corrugated Steel Pipe shall conform to AASHTO M 36 and M 218.

Concrete, welded wire fabric or reinforcing steel and galvanized pipe shall not be paid for directly, but shall be considered subsidiary to the item "Pile Encasement".

STATE OF ARKANSAS
LICENSED PROFESSIONAL ENGINEER
No. 9235
9/22/23
CHARLES R. ELLIS

BRIDGE ENGINEER

DETAILS FOR STEEL H-PILES
AND PILE ENCASEMENTS
HEARTSILL CREEK & VACHE GRASSE CREEK

ROUTE SEC.

ARKANSAS STATE HIGHWAY COMMISSION

LITTLE ROCK, ARK.

DRAWN BY: JSQ DATE: 8/31/2023 FILENAME: b040861_c5.dgn
CHECKED BY: JYP DATE: 9/1/2023 SCALE: No Scale
DESIGNED BY: STD DATE: -

BRIDGE NO. 07641-07645 DRAWING NO. 66944

PRINT DATE: 9/22/2023

DATE REVISED	DATE REVISED	FED. RD. DIST. NO.	STATE	JOB NO.	SHEET NO.	TOTAL SHEETS
		6	ARK.	040861	205	291
		07641-07645		- Bearings -	66945	

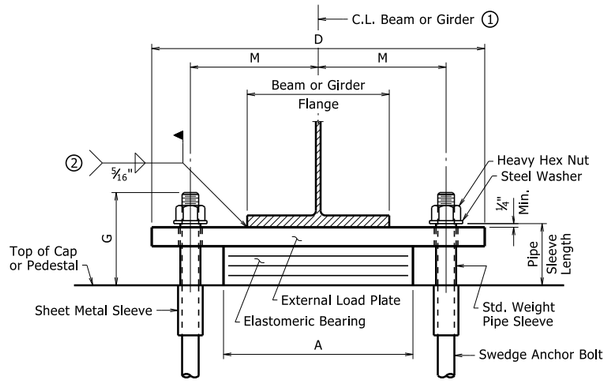

FRONT VIEW - WITHOUT SHEAR BLOCKS

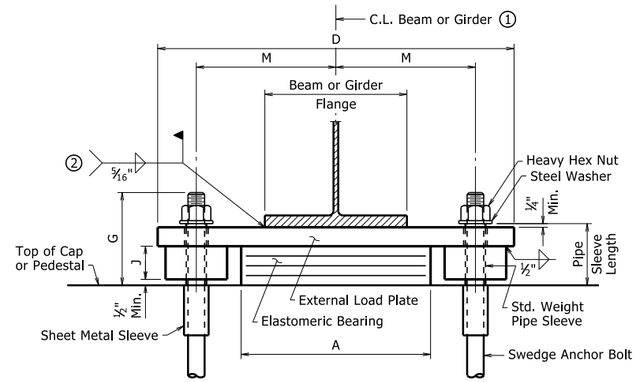

FRONT VIEW - WITH SHEAR BLOCKS

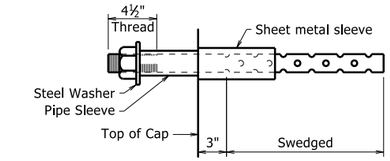

ANCHOR BOLT DETAIL

Anchor Bolts may be cast in place or drilled and grouted into place. If Anchor Bolts are to be cast in place, the Galvanized Sheet Metal Sleeves will not be required.

If Anchor Bolts are to be drilled and grouted in place, the Galvanized Sheet Metal Sleeves shall be cast in place as shown. Sleeves shall be dry packed with styrofoam, urethane foam, or approved equal prior to pouring of concrete. After pouring of the cap and prior to erection of Structural Steel, the dry pack shall be removed and holes for the anchor bolts shall be accurately drilled into the concrete. Bolts placed in drilled holes shall be accurately set and fixed using a QPL-approved epoxy or non-shrink grout that completely fills the holes. Galvanized Sheet Metal Sleeves shall meet the requirements of ASTM A653, CS Type B or approved equivalent, be of minimum 16 gauge thickness, and be galvanized according to ASTM B695, Class 50. Sheet Metal Sleeves will not be paid for directly, but will be considered subsidiary to the item "Structural Steel in Plate Girder Spans (A709, Gr. 50W) or "Structural Steel in Beam Spans (A709, Gr. 50W)."

For Bridge No. 07642 at Bent 1, external load plate shall be clipped as shown in "PLAN OF BEARING AT END BENT" on Dwg. No. 66897.

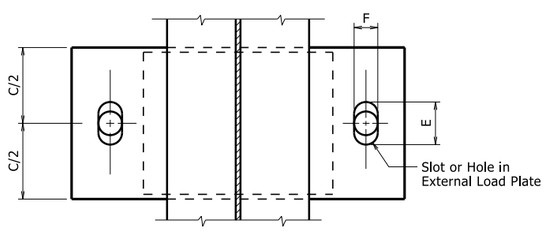

PLAN VIEW - WITHOUT SHEAR BLOCKS

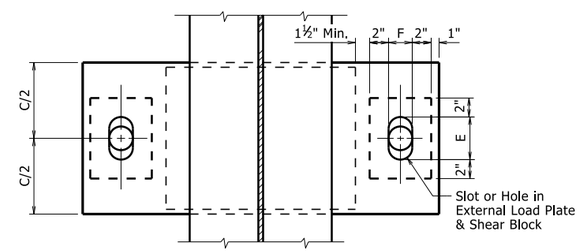

PLAN VIEW - WITH SHEAR BLOCKS

① C.L. Elastomeric Pad shall be aligned with C.L. Beam or Girder.

② Unless otherwise approved by the Engineer, welding of the external load plate at expansion bearings to the beam or girder will be allowed only when: 1) the approximate average air temperature during the 24 hour period immediately preceding welding is between 40°F and 80°F; and 2) the slots in the external load plate are positioned to center on the anchor bolts; and 3) no horizontal deformation of the elastomeric pad is evident. If welding at other temperatures is required, the Engineer will provide adjustment data. Care shall be taken to ensure that the external load plate is in full and complete contact with the beam or girder flange before welding begins.

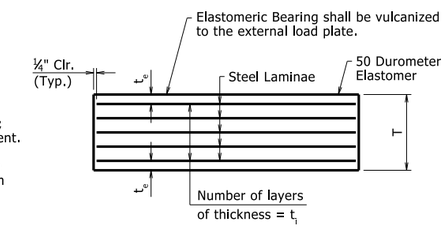

t_o = Thickness of elastomer cover on top and bottom of pad
t_i = Thickness of elastomer between steel laminae
N = Number of elastomer layers of thickness t_i

ELASTOMERIC BEARING

Prior to erection of the beams or girders, the Contractor shall verify the orientation of the bearings with respect to T_a and T_b.

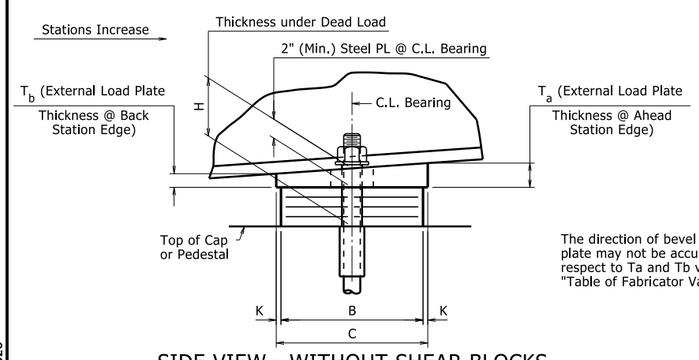

SIDE VIEW - WITHOUT SHEAR BLOCKS

The direction of bevel of the external load plate may not be accurately depicted with respect to Ta and Tb values shown in the "Table of Fabricator Variables."

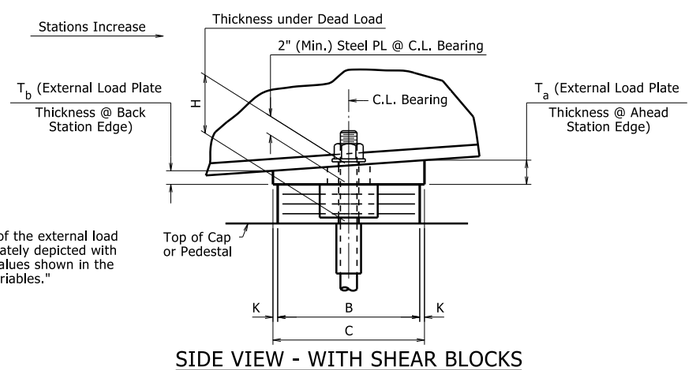

SIDE VIEW - WITH SHEAR BLOCKS

GENERAL NOTES

Elastomeric Bearings shall conform to Section 808 and shall be paid for at the unit price bid for "Elastomeric Bearings".

External load plates and shear blocks shall conform to ASTM A709, Grade 50W. Pipe sleeves shall be ASTM A500, Grade B, and shall be galvanized to conform to AASHTO M 232, Class C or ASTM B695, Class 50.

External load plates and shear blocks shall be completely fabricated (including bevel and bolt holes) and shall be cleaned before vulcanizing to the elastomeric bearing. The surface in contact with the elastomeric bearing shall be cleaned in accordance with Subsection 808.03. Other surfaces shall be blast cleaned in accordance with Subsection 807.84(b) for painted steel and 807.84(e) for unpainted Grade 50W steel.

Anchor Bolts, Washers, and Nuts shall conform to Subsection 807.07. The anchor bolt grade of steel shall be as specified in the "Table of Fabricator Variables" on Dwg. No. 66946. Indentations shall be circular with rounded bottoms and staggered as shown in the details.

Pipe Sleeves, Anchor Bolts, Washers, and Nuts shall be paid for at the unit price bid for "Structural Steel in Plate Girder Spans (A709, Gr. 50W) or "Structural Steel in Beam Spans (A709, Gr. 50W)." External load plates will not be measured and paid for separately, but will be considered incidental to the unit price bid for "Elastomeric Bearings."

Bearings shall be seated in accordance with Subsection 808.08. This work and materials are considered subsidiary to the item "Elastomeric Bearings" and will not be paid for directly.

STATE OF ARKANSAS
LICENSED PROFESSIONAL ENGINEER
No. 9235
9/22/23
CHARLES R. ELLIS

BRIDGE ENGINEER

SHEET 1 OF 2
DETAILS OF
ELASTOMERIC BEARINGS
HEARTSILL CREEK & VACHE GRASSE CREEK

ROUTE SEC.

ARKANSAS STATE HIGHWAY COMMISSION

LITTLE ROCK, ARK.

DRAWN BY:	CTM	DATE:	6/27/23	FILENAME:	b040861x2_e1.dgn
CHECKED BY:	JSQ	DATE:	9/5/2023	SCALE:	No Scale
DESIGNED BY:	CTM	DATE:	6/2023		

BRIDGE NO. 07641-07645 DRAWING NO. 66945

PRINT DATE: 9/22/2023

DATE REVISED	DATE REVISED	FED. RD. DIST. NO.	STATE	JOB NO.	SHEET NO.	TOTAL SHEETS
		6	ARK.	040861	206	291
		07641-07645	- Bearings -		66946	

(1) Maximum Design Load = Service 1 Limit State

TABLE OF FABRICATOR VARIABLES

								ELASTOMERIC PAD							EXTERNAL LOAD PLATE									ANCHOR BOLT				
BRIDGE NO.	LOCATION		BEARING TYPE	(1) NO. of BEARINGS EACH BENT	MAXIMUM DESIGN LOAD (KIPS)	G	H	A	B	N	t_i	t_e	NO. & THICKNESS OF STEEL LAMINAE	T	C	D	E	F	J	K	M	T_a	T_b	ANCHOR BOLT		PIPE SLEEVE SIZE (ø x L)	SHEET METAL SLEEVE SIZE (ø x L)	STEEL WASHER SIZE (O.D.)
	BENT NO (S).	BEAM OR GIRDER NO.																						(ø x L)	GRADE			
07641	1,6	All	Exp	9	112	10 1/2"	6 3/4"	14"	10"	7	1/2"	1/4"	8 @ 12 ga.	4 13/16"	13"	27"	6 7/8"	3 3/4"	NA	1 1/2"	10"	2.02"	1.98"	2 1/2" x 40"	55	3" x 7"	4" x 17"	4 1/2"
	2,5	All	Exp	9	247	8 1/8"	4 3/8"	16"	13"	3	1/2"	1/4"	4 @ 12 ga.	2 7/16"	14"	29"	5 7/8"	3 3/4"	NA	1/2"	11"	2.02"	1.98"	2 1/2" x 37.5"	55	3" x 4 5/8"	4" x 17"	4 1/2"
	3,4	All	Fix	9	252	7 3/8"	3 13/16"	16"	14"	2	1/2"	1/4"	3 @ 12 ga.	1 13/16"	15"	28"	3 1/8"	3 1/8"	NA	1/2"	10 3/4"	2.02"	1.98"	2 1/4" x 35"	55	2 1/2" x 4 1/8"	4" x 17"	4"
07642	1	All	Exp	9	125	9 3/4"	6 1/8"	12"	11"	6	1/2"	1/4"	7 @ 12 ga.	4 1/4"	12 1/2"	24 1/2"	6 1/2"	3 1/8"	NA	3/4"	9"	1.99"	2.01"	2 1/4" x 35.5"	55	2 1/2" x 6 1/2"	4" x 11"	4"
	2	All	Exp	9	298	8"	4 15/16"	16"	14"	4	1/2"	1/4"	5 @ 12 ga.	3"	15"	34 3/4"	4 7/8"	2 5/8"	2"	1/2"	13"	1.98"	2.02"	1 3/4" x 29"	55	2" x 5 1/4"	4" x 11"	3 3/8"
	3	All	Fix	9	293	8 1/2"	4 15/16"	16"	13"	4	1/2"	1/4"	5 @ 12 ga.	3"	14"	35 3/4"	3 1/8"	3 1/8"	2"	1/2"	13 1/4"	1.97"	2.03"	2 1/4" x 34.5"	55	2 1/2" x 5 1/4"	4" x 11"	4"
	4	All	Fix	9	293	8 1/2"	4 15/16"	16"	13"	4	1/2"	1/4"	5 @ 12 ga.	3"	14"	35 3/4"	3 1/8"	3 1/8"	2"	1/2"	13 1/4"	1.97"	2.03"	2 1/4" x 34.5"	55	2 1/2" x 5 1/4"	4" x 11"	4"
	5	All	Exp	9	298	8"	4 15/16"	16"	14"	4	1/2"	1/4"	5 @ 12 ga.	3"	15"	34 3/4"	4 7/8"	2 5/8"	2"	1/2"	13"	1.97"	2.03"	1 3/4" x 29"	55	2" x 5 1/4"	4" x 11"	3 3/8"
	6	All	Exp	9	125	9 3/4"	6 1/8"	12"	11"	6	1/2"	1/4"	7 @ 12 ga.	4 1/4"	12 1/2"	24 1/2"	6 1/2"	3 1/8"	NA	3/4"	9"	1.97"	2.03"	2 1/4" x 35.5"	55	2 1/2" x 6 1/2"	4" x 11"	4"
07643	1	All	Exp	9	131	8 5/8"	5 9/16"	12"	10"	5	1/2"	1/4"	6 @ 12 ga.	3 5/8"	11"	23 1/2"	4 7/8"	2 5/8"	NA	1/2"	8 3/4"	2.02"	1.98"	1 3/4" x 29.5"	55	2" x 5 7/8"	4" x 11"	3 3/8"
	2	All	Fix	9	341	7 5/8"	4 3/8"	17"	14 1/2"	3	1/2"	1/4"	4 @ 12 ga.	2 7/16"	15 1/2"	36 3/4"	3 1/8"	3 1/8"	2"	1/2"	13 3/4"	2.02"	1.98"	2" x 30.5"	55	2 1/2" x 4 5/8"	4" x 11"	3 3/4"
	3	All	Fix	9	341	7 5/8"	4 3/8"	17"	14 1/2"	3	1/2"	1/4"	4 @ 12 ga.	2 7/16"	15 1/2"	36 3/4"	3 1/8"	3 1/8"	2"	1/2"	13 3/4"	1.97"	2.03"	2" x 30.5"	55	2 1/2" x 4 5/8"	4" x 11"	3 3/4"
	4	All	Exp	9	131	8 5/8"	5 9/16"	12"	10"	5	1/2"	1/4"	6 @ 12 ga.	3 5/8"	11"	23 1/2"	4 7/8"	2 5/8"	NA	1/2"	8 3/4"	1.91"	2.09"	1 3/4" x 29.5"	55	2" x 5 7/8"	4" x 11"	3 3/8"
07644	1	All	Exp	8	99	9 1/2"	6 3/16"	14"	9"	6	1/2"	1/4"	7 @ 12 ga.	4 1/4"	12"	26"	5 7/8"	3 1/8"	NA	1 1/2"	9 3/4"	2.11"	1.89"	2" x 33"	55	2 1/2" x 6 1/2"	4" x 14"	3 3/4"
	2	All	Exp	8	214	7 5/8"	4 3/8"	15"	12"	3	1/2"	1/4"	4 @ 12 ga.	2 7/16"	13"	27"	5"	3 1/8"	NA	1/2"	10 1/4"	2.05"	1.95"	2" x 31.5"	55	2 1/2" x 4 5/8"	4" x 14"	3 3/4"
	3	All	Fix	8	221	8 1/8"	4 3/8"	15"	12"	3	1/2"	1/4"	4 @ 12 ga.	2 7/16"	13"	28"	3 3/4"	3 3/4"	NA	1/2"	10 1/2"	2.02"	1.98"	2 1/2" x 37"	55	3" x 4 5/8"	4" x 14"	4 1/2"
	4	All	Fix	8	221	8 1/8"	4 3/8"	15"	12"	3	1/2"	1/4"	4 @ 12 ga.	2 7/16"	13"	28"	3 3/4"	3 3/4"	NA	1/2"	10 1/2"	2.02"	1.98"	2 1/2" x 37"	55	3" x 4 5/8"	4" x 14"	4 1/2"
	5	All	Exp	8	216	7 5/8"	4 3/8"	15"	12"	3	1/2"	1/4"	4 @ 12 ga.	2 7/16"	13"	27"	5"	3 1/8"	NA	1/2"	10 1/4"	2.02"	1.98"	2" x 31.5"	55	2 1/2" x 4 5/8"	4" x 14"	3 3/4"
	6	All	Exp	8	99	9 1/2"	6 3/16"	14"	9"	6	1/2"	1/4"	7 @ 12 ga.	4 1/4"	12"	26"	5 7/8"	3 1/8"	NA	1 1/2"	9 3/4"	2.02"	1.98"	2" x 33"	55	2 1/2" x 6 1/2"	4" x 14"	3 3/4"
07645	1	All	Exp	8	108	8 5/8"	5 9/16"	16"	10"	5	1/2"	1/4"	6 @ 12 ga.	3 5/8"	11"	27"	4 3/4"	2 5/8"	NA	1/2"	10 1/2"	1.98"	2.02"	1 3/4" x 31.5"	55	2" x 5 7/8"	4" x 19"	3 3/8"
	2	All	Fix	8	284	7 5/8"	4 3/8"	18"	16"	3	1/2"	1/4"	4 @ 12 ga.	2 7/16"	17"	37 3/4"	3 1/8"	3 1/8"	1 3/4"	1/2"	14 1/4"	1.97"	2.03"	2" x 32.5"	55	2 1/2" x 4 5/8"	4" x 19"	3 3/4"
	3	All	Fix	8	285	7 5/8"	4 3/8"	18"	16"	3	1/2"	1/4"	4 @ 12 ga.	2 7/16"	17"	37 3/4"	3 1/8"	3 1/8"	1 3/4"	1/2"	14 1/4"	1.97"	2.03"	2" x 32.5"	55	2 1/2" x 4 5/8"	4" x 19"	3 3/4"
	4	All	Exp	8	109	8 5/8"	5 9/16"	16"	10"	5	1/2"	1/4"	6 @ 12 ga.	3 5/8"	11"	27"	4 3/4"	2 5/8"	NA	1/2"	10 1/2"	1.94"	2.06"	1 3/4" x 31.5"	55	2" x 5 7/8"	4" x 19"	3 3/8"

STATE OF ARKANSAS
9/11/2023 8:07:44 AM
LICENSED PROFESSIONAL ENGINEER
No. 9235
9/22/23
CHARLES R. ELLIS

BRIDGE ENGINEER

SHEET 2 OF 2
DETAILS OF
ELASTOMERIC BEARINGS
HEARTSILL CREEK & VACHE GRASSE CREEK

ROUTE SEC.

ARKANSAS STATE HIGHWAY COMMISSION

LITTLE ROCK, ARK.

DRAWN BY: CTM DATE: 6/27/23 FILENAME: b040861x2_e1.dgn
CHECKED BY: JSQ DATE: 9/5/2023 SCALE: No Scale
DESIGNED BY: CTM DATE: 6/2023

BRIDGE NO. 07641-07645 DRAWING NO. 66946

PRINT DATE: 9/22/2023

DATE REVISED	DATE REVISED	FED. RD. DIST. NO.	STATE	JOB NO.	SHEET NO.	TOTAL SHEETS
		6	ARK.	040861	207	291
		07641-07645 -Common Details -			66947	

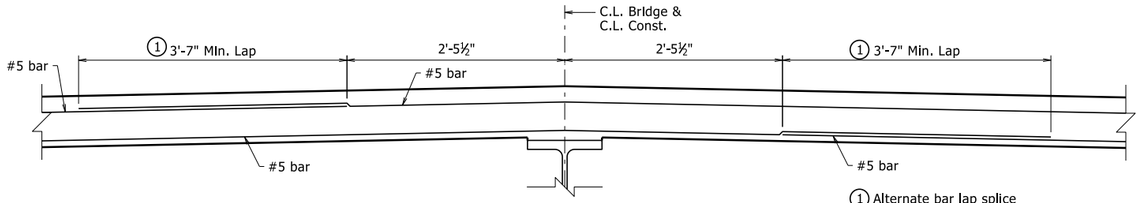

TRANSVERSE LAP SPLICE DETAIL SITES 1-3

Looking Ahead Bridge No. 07641, Bridge Nos. 07642 & 07643 Similar
1" = 1'-0"

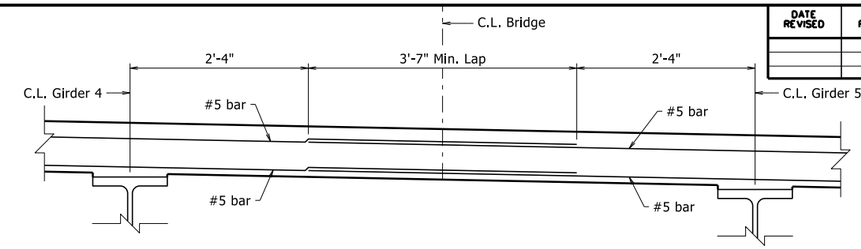

TRANSVERSE LAP SPLICE DETAIL SITES 4 & 5

Looking Ahead Bridge No. 07645, Bridge No. 07644 Similar
1" = 1'-0"

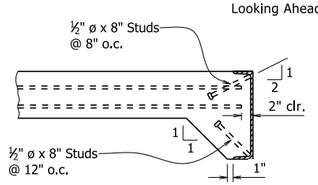

As an alternate to ⅝" ø studs, ½" ø x 8" studs spaced as shown may be used. Use weight of ⅝" ø stud as basis of measurement of structural steel in anchors.

DETAILS OF ALTERNATE ANCHORS AND PLACEMENT OF LONGITUDINAL REINFORCEMENT

No Scale

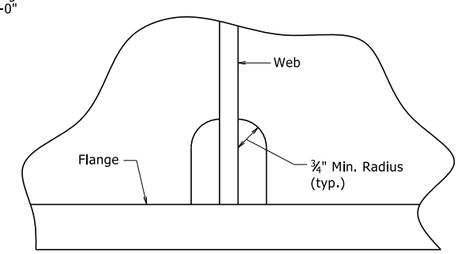

Height and width of clip shall be as noted in other details.

ALTERNATE CLIP DETAIL

For Bearing Stiffeners and Connection Plates

No Scale

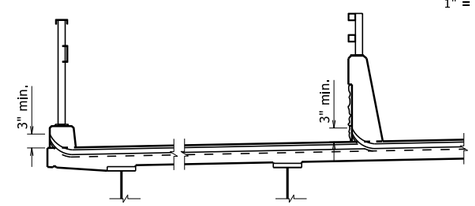

JOINT SEAL PLACEMENT AT SIDE PATH

Looking Ahead
Bridge No. 07644 Shown, Bridge No. 07645 Similar
No Scale

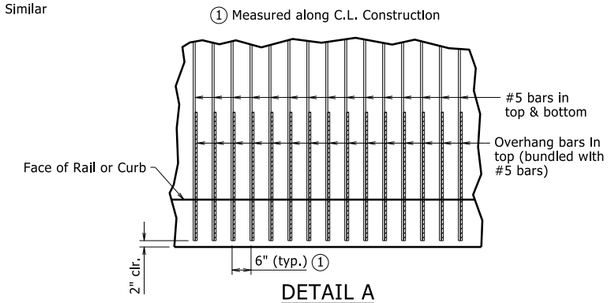

DETAIL A

No Scale

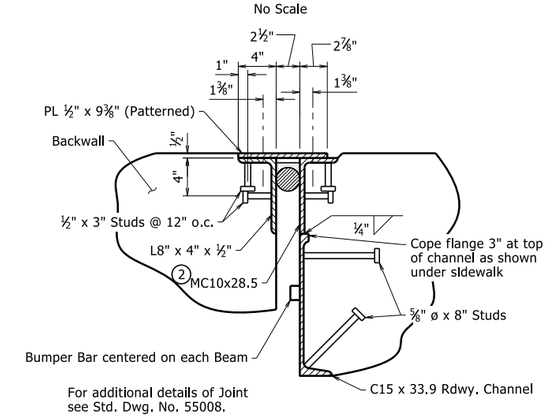

SIDEWALK SECTION THRU JOINT AT END BENT

1½" = 1'-0"

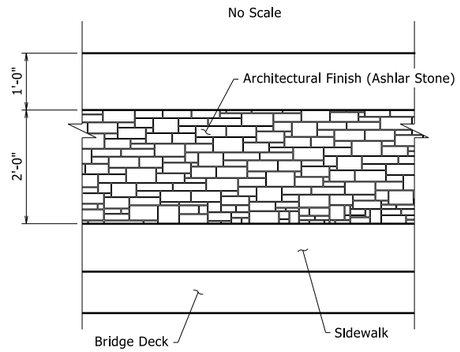

Slip forming of bridge rail shall not be permitted.

DETAILS OF RAIL ENHANCEMENT

¾" = 1'-0"

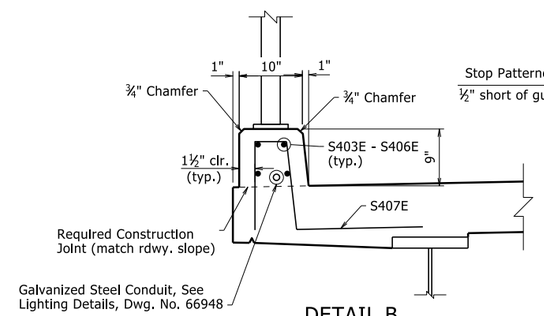

DETAIL B

¾" = 1'-0"

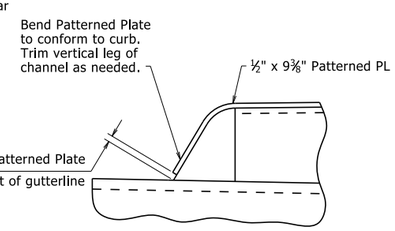

DETAIL X

No Scale

The temperature used to set the joint opening shall be the approximate average air temperature during the 24 hour period immediately before the bolts are tightened. The Engineer shall establish the temperature. Interpolation of the table may be necessary. Installation is limited to 40° F min. and 80° F max. The temperature limitations by the lubricant-adhesive manufacturer shall be observed.

TABLE OF SILICONE JOINT DATA

Bridge No.	Bent. No.	"A" - Width perpendicular to joint at 24 hour average temperature of:			"B" - Width perpendicular to joint at 24 hour average temperature of:
		40°F	60°F	80°F	60°F
06741	1	2 13/16"	2½"	2 3/16"	2½"
	6	2 13/16"	2½"	2 3/16"	2½"
06742	1	2 13/16"	2½"	2 3/16"	2½"
	6	2 13/16"	2½"	2 3/16"	2½"
06743	1	2 11/16"	2½"	2 5/16"	2½"
	4	2 11/16"	2½"	2 5/16"	2½"
06744	1	2¾"	2½"	2¼"	2½"
	6	2¾"	2½"	2¼"	2½"
06745	1	2 11/16"	2½"	2 5/16"	2½"
	4	2 11/16"	2½"	2 5/16"	2½"

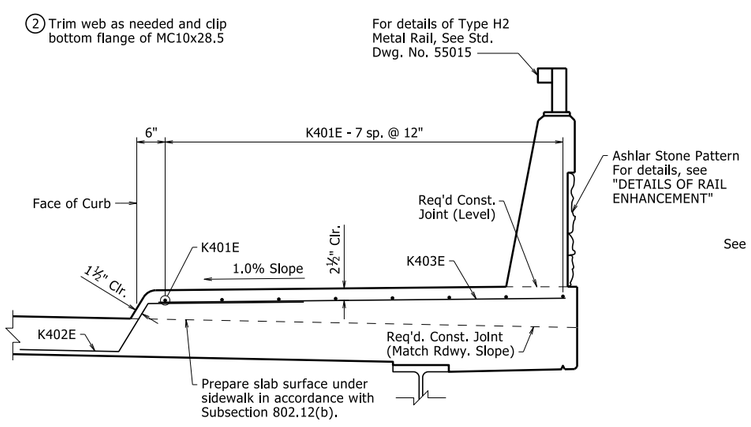

SIDEWALK DETAIL

Right Side of Roadway Bridge Nos. 07641-07645, Left Side Similar Bridge Nos. 07641-07643
Looking Ahead
¾" = 1'-0"

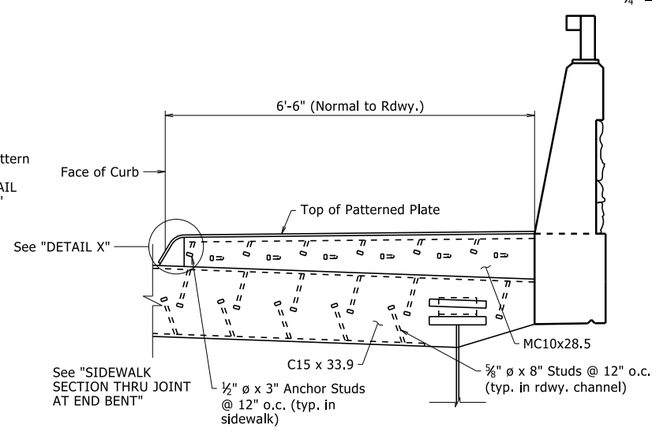

EXPANSION DEVICE DETAIL AT SIDEWALK

Looking Ahead
Left Forward Skew Shown, Right Forward Skew Similar
Dimension are along Skew except as noted
¾" = 1'-0"

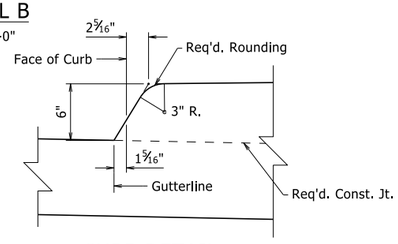

CURB DETAIL

1½" = 1'-0"

STATE OF ARKANSAS
LICENSED PROFESSIONAL ENGINEER
No. 9235
9/22/23
CHARLES R. ELLIS

BRIDGE ENGINEER

SHEET 1 OF 2
COMMON DETAILS OF CONTINUOUS PLATE GIRDER & W-BEAM UNITS
HEARTSILL CREEK & VACHE GRASSE CREEK

ROUTE SEC.

ARKANSAS STATE HIGHWAY COMMISSION

LITTLE ROCK, ARK.

DRAWN BY: CTM DATE: 8/24/23 FILENAME: b040861_c4.dgn
CHECKED BY: JYP DATE: 9/1/23 SCALE: As Shown
DESIGNED BY: CTM DATE: 8/2023

BRIDGE NO. 07641-07645 DRAWING NO. 66947

PRINT DATE: 9/22/2023

DATE REVISED	DATE REVISED	FED. RD. DIST. NO.	STATE	JOB NO.	SHEET NO.	TOTAL SHEETS
		6	ARK.	040861	208	291
		07644 & 07645 - Common Details - 66948				

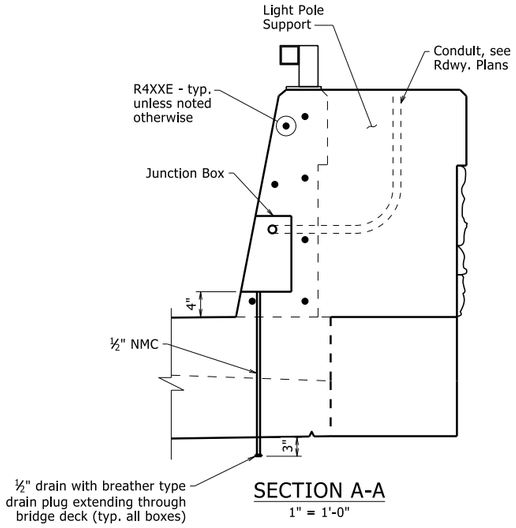

SECTION A-A

1" = 1'-0"

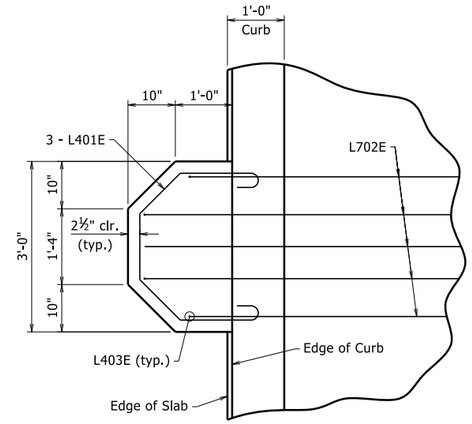

PLAN OF LIGHT POLE SUPPORT AT CURB

Left Side of Bridge Only

¾" = 1'-0"

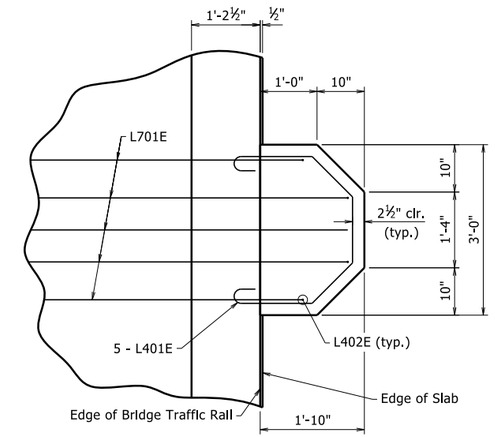

PLAN OF LIGHT POLE SUPPORT AT BRIDGE RAIL

Right Side of Bridge Only

¾" = 1'-0"

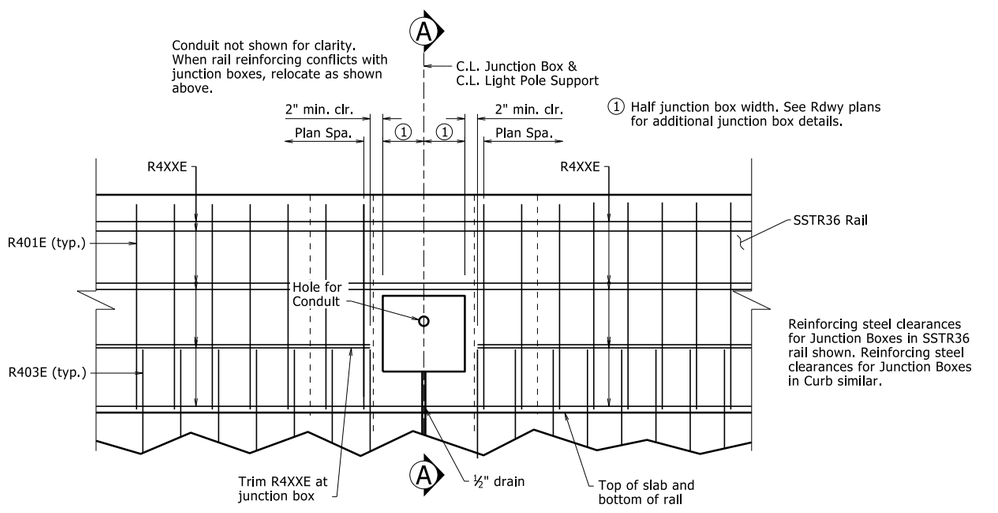

REINFORCEMENT DETAILS FOR LIGHT POLE JUNCTION BOXES

No Scale

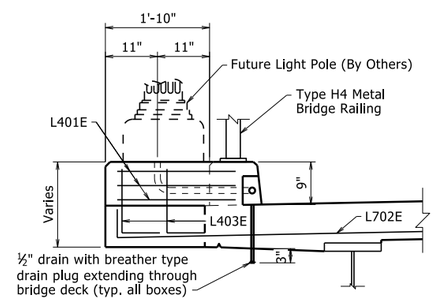

DETAIL OF LIGHT POLE SUPPORT AT CURB

Looking Ahead; Left Side of Bridge Only

¾" = 1'-0"

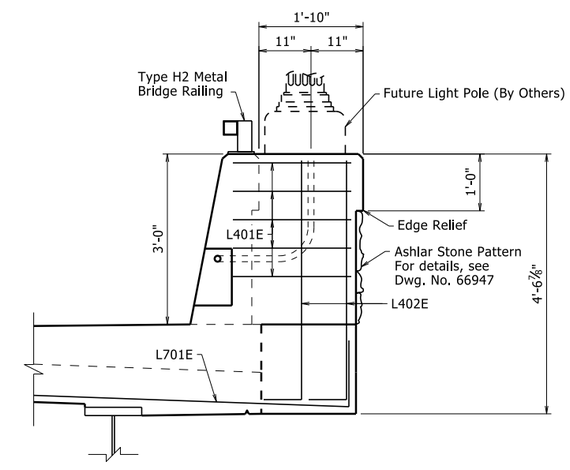

DETAIL OF LIGHT POLE SUPPORT AT BRIDGE RAIL

Looking Ahead; Right Side of Bridge Only

¾" = 1'-0"

For locations of light pole support, see Dwg. Nos. 66910 & 66922-66923, or 66925 & 66936-66937.

See Special Provisions "TEXTURED COATING FINISH" & "ARCHITECTURAL FINISH" for application to concrete and light pole supports.

STATE OF ARKANSAS
LICENSED PROFESSIONAL ENGINEER
No. 9235
9/22/23
CHARLES R. ELLIS

BRIDGE ENGINEER

SHEET 2 OF 2
COMMON DETAILS OF CONTINUOUS PLATE GIRDER & W-BEAM UNITS
HEARTSILL CREEK & VACHE GRASSE CREEK

ROUTE SEC.

ARKANSAS STATE HIGHWAY COMMISSION

LITTLE ROCK, ARK.

DRAWN BY: CTM	DATE: 8/24/23	FILENAME: b040861_c4.dgn	
CHECKED BY: JYP	DATE: 9/1/23	SCALE: As Shown	
DESIGNED BY: CTM	DATE: 8/2023		

BRIDGE NO. 07644 & 07645 DRAWING NO. 66948

PRINT DATE: 9/22/2023

DATE REVISED	DATE REVISED	FED. RD. DIST. NO.	STATE	JOB NO.	SHEET NO.	TOTAL SHEETS
		6	ARK.	040861	209	291
		07644 & 07645 - TYPE H3 RAILING - 66949				

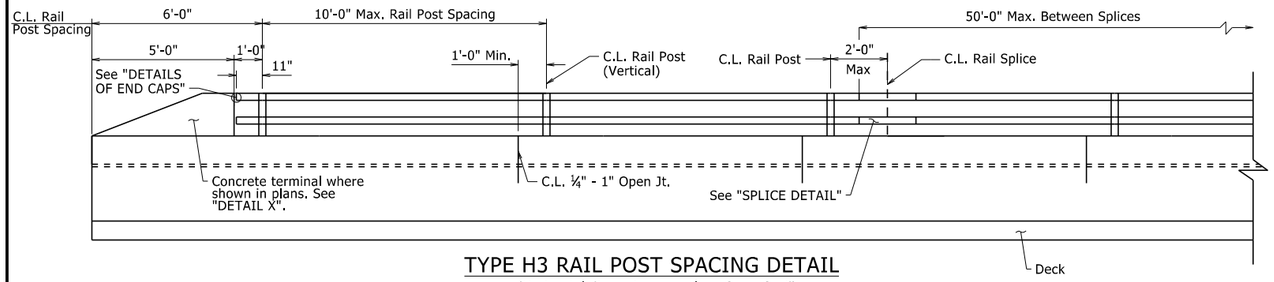

TYPE H3 RAIL POST SPACING DETAIL

(Horizontal dimensions are along face of rail)

3/8" = 1'-0"

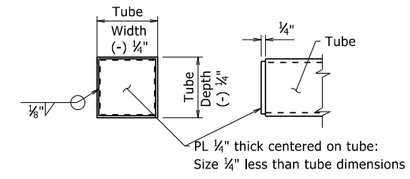

DETAILS OF END CAPS

3" = 1'-0"

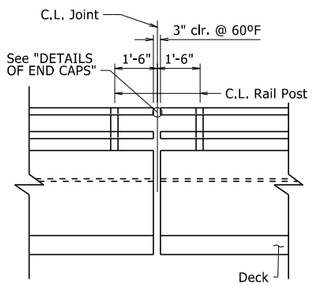

RAIL POST SPACING AT EXPANSION JOINTS

3/8" = 1'-0"

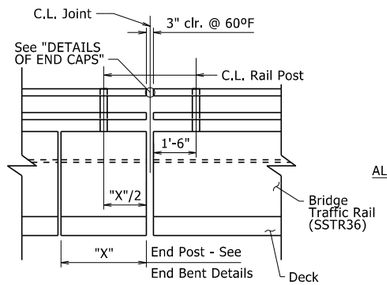

RAIL POST SPACING AT BRIDGE ENDS WITH CONCRETE BARRIER WALL

3/8" = 1'-0"

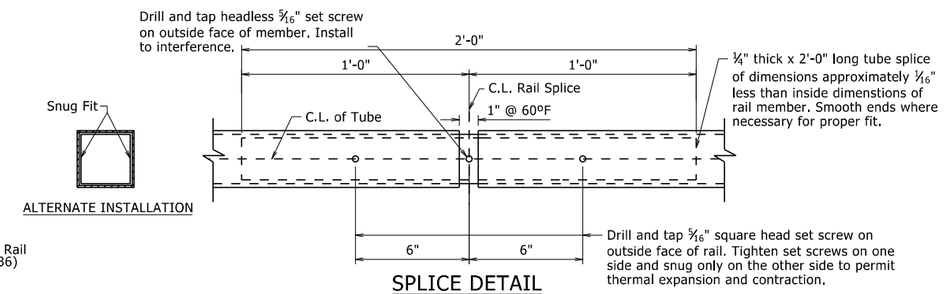

SPLICE DETAIL

3" = 1'-0"

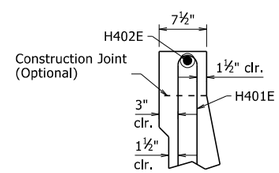

SECTION A-A

1" = 1'-0"

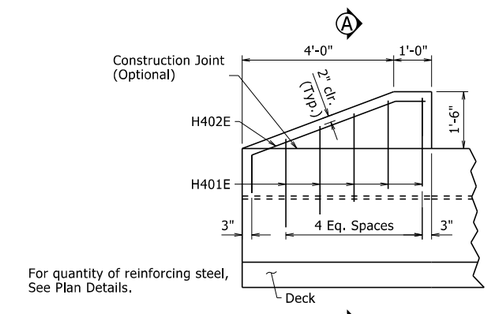

DETAIL X

1/2" = 1'-0"

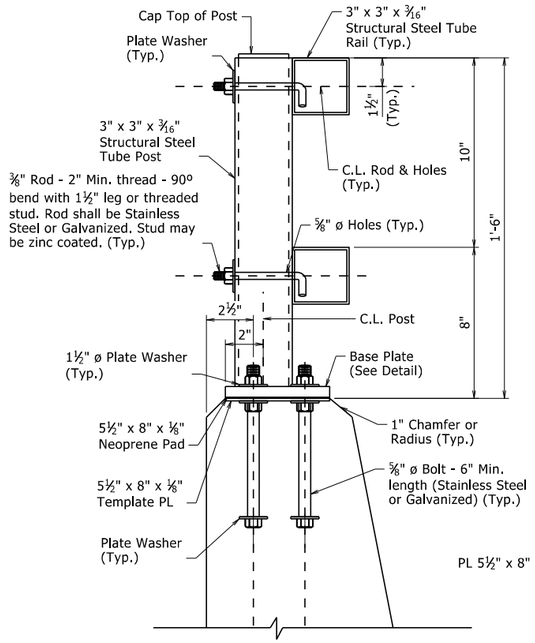

DETAILS OF POST ANCHOR SYSTEM FOR TYPE H3 RAIL

(Cast-In-Place Bolts)

3" = 1'-0"

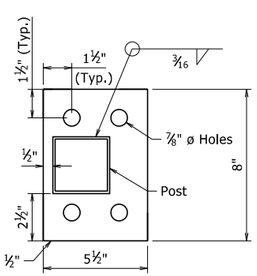

BASE PLATE

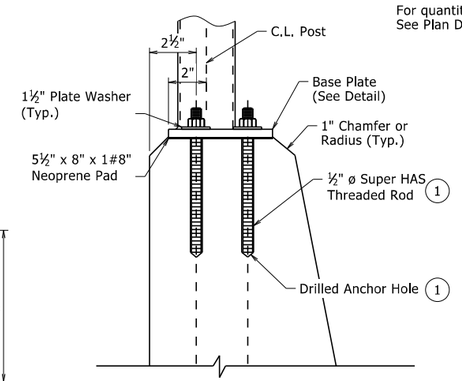

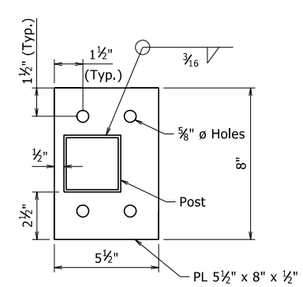

ALTERNATE BASE PLATE

(1) HILTI HIT RE 500 Epoxy Adhesive Anchor System with 4½" embedment or an approved equal.

The HILTI Epoxy Adhesive Anchor System (or approved equal) shall be installed in accordance with Manufacturer's recommendations.

DETAILS OF ALTERNATE POST ANCHOR SYSTEM FOR TYPE H3 RAIL

(Epoxy Adhesive Anchors)

3" = 1'-0"

MATERIALS:

Rail tubing, posts, end caps, and base plates shall conform to ASTM A709, Grade 36 or ASTM A500-Grade B, and shall be galvanized after fabrication in accordance with Subsection 806.02(c). When required elsewhere in the plans, steel rail members shall receive a powder coating process after galvanizing. Galvanized surfaces shall be prepared in accordance with Subsection 807.87 and the manufacturer's recommendations prior to application of the powder coating process.

The powder coating process shall be a two coat system applied using electrostatic spray. The base coat shall be a thermosetting epoxy powder with a minimum thickness of 2 to 4 mils. The top coat shall be tough polyester powder with a minimum thickness of 2 to 4 mils. The color shall be as shown in the plans. Coated galvanized framework shall have a salt spray resistance of 3,000 hours using ASTM B117 without loss of adhesion. The powder coating process shall be in accordance with manufacturer's recommendations. Any damage to the powder coated finish shall be repaired with a compatible touch-up system in accordance with the manufacturer's recommendations and to the satisfaction of the Engineer at the Contractor's expense.

Cast-in-place anchor bolts, nuts, washers, and set screws shall be galvanized high-strength steel or stainless steel. Mixing of galvanized and stainless steel fasteners will not be permitted.

High-Strength Steel:

Cast-in-place anchor bolts shall conform to ASTM F3125, Grade A325, Type 1.
Nuts shall conform to ASTM A563, Grade DH or AASHTO M 292, Grade 2H.
Washers shall conform to ASTM F436.
Plate Washers shall conform to ASTM A709, Grade 36.
Template Plates shall conform to ASTM A709, Grade 36.
Splice Set Screws shall conform to ASTM A307, Grade A.
Anchor bolts, nuts, washers, plate washers, and set screws shall be galvanized in accordance with AASHTO M 232, Class C or ASTM B695, Class 50.

Stainless Steel:

Cast-in-place anchor bolts shall conform to ASTM A193, Grade B8, Class 2 or A320, Grade B8, Class 2 with a minimum yield strength of 80,000 psi.
Nuts shall conform to ASTM A194, Grade 8.
Washers shall conform to ASTM A240, Type 302.
Plate Washers shall conform to ASTM A240, Type 302.
Template Plates shall conform to ASTM A240, Type 302.
Splice Set Screws shall conform to ASTM A193, Grade B8, Class 1 or A320, Grade B8, Class 1.

Threads on bolts, screws, and nuts shall conform to American Standard Coarse Series, Class 2 FIT, ASA Specification B1.1. Plate washers shall have dimensions meeting the requirements of ANSI/ASME B18.22.1, Type A plain washer (Wide Series) unless otherwise noted. Neoprene pads shall conform to the requirements of Subsection 807.15(b).

GENERAL NOTES FOR BRIDGE RAILING:

Rail layout shall conform to vertical and horizontal alignment of bridge. All posts shall be vertical. Rail sections shall be fabricated to attach to at least three posts.

Base plates shall not be placed upon areas that are improperly finished, deformed or irregular.

Bridge railing, including posts, templates and base plates, fasteners, and neoprene pads shall be paid for at the contract unit price bid per linear foot for "Metal Bridge Railing (Type H3)". When required elsewhere in the plans, powdered coating finish and repair of powdered coating finish shall be considered subsidiary to the item "Metal Bridge Railing (Type H3)".

Shop drawings showing details of railing shall be submitted and approval secured prior to fabrication.

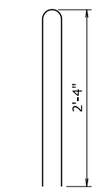

H401E

(Length = 4'-9")

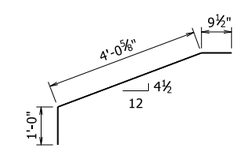

H402E

(Length = 5'-10")

Pin diameter for bending is 2". Bars shall be epoxy coated.

BENDING DIAGRAMS

No Scale

STATE OF ARKANSAS
9/22/2023 8:01:11 AM
LICENSED PROFESSIONAL ENGINEER
No. 9235
9/22/23
CHARLES R. ELLIS

BRIDGE ENGINEER

DETAILS FOR
TYPE H3 RAILING
HEARTSILL CREEK & VACHE GRASSE CREEK

ROUTE SEC.

ARKANSAS STATE HIGHWAY COMMISSION

LITTLE ROCK, ARK.

DRAWN BY:	YG	DATE:	5/25/2023	FILENAME:	b040861_r1.dgn
CHECKED BY:	JCG	DATE:	6/15/2023	SCALE:	As Noted
DESIGNED BY:	STD	DATE:	-		

BRIDGE NO. 07644 & 07645 DRAWING NO. 66949

PRINT DATE: 9/22/2023

DATE REVISED	DATE REVISED	FED. RD. DIST. NO.	STATE	JOB NO.	SHEET NO.	TOTAL SHEETS
		6	ARK.	040861	210	291
		07644 & 07645 - TYPE H4 RAILING - 66950				

For General Notes, see Dwg. No. 66949.

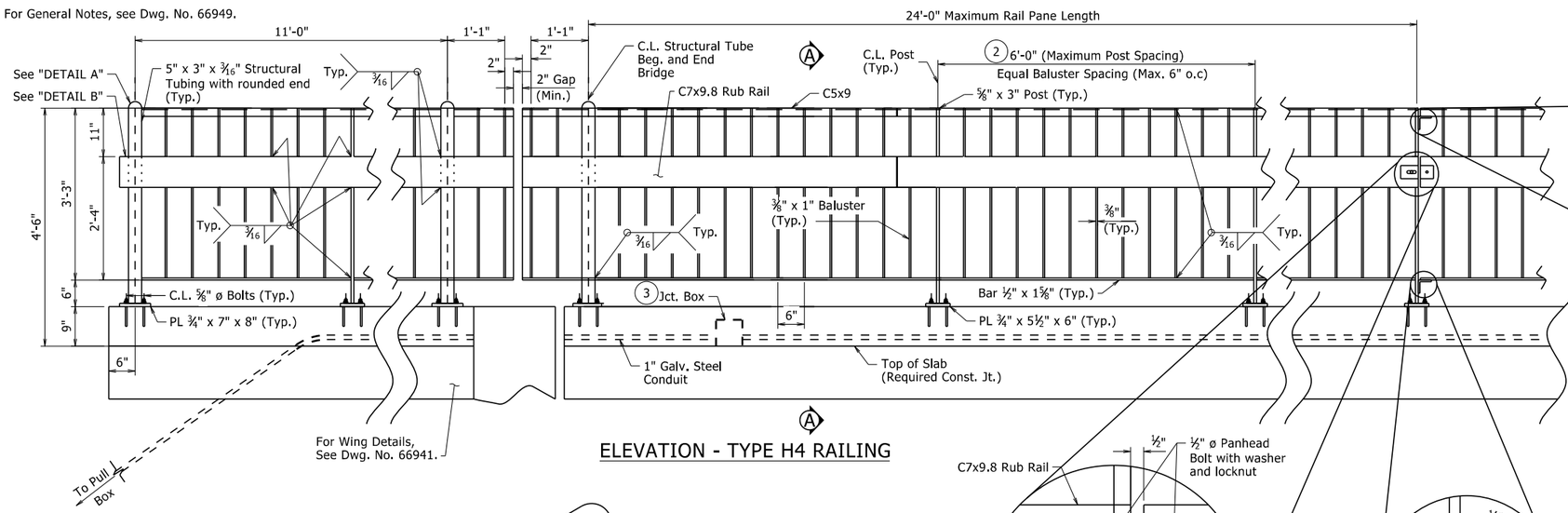

ELEVATION - TYPE H4 RAILING

Note: All Posts and Balusters shall be vertical.

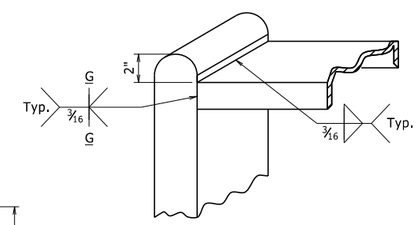

DETAIL A

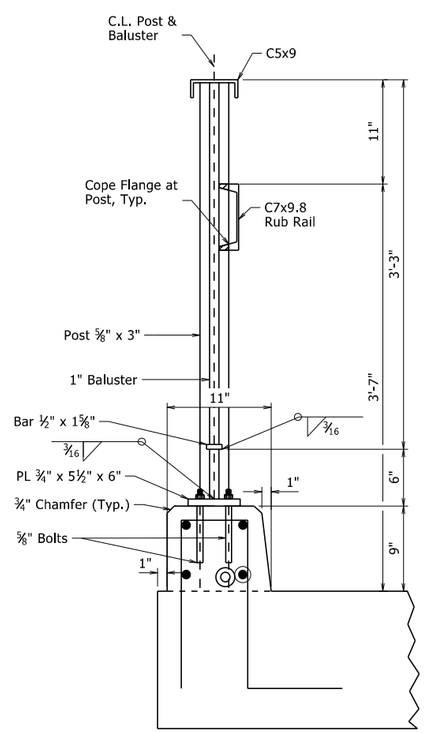

SECTION A-A

For reinforcing details in curb, see "DETAIL B" on Dwg. No. 66947.

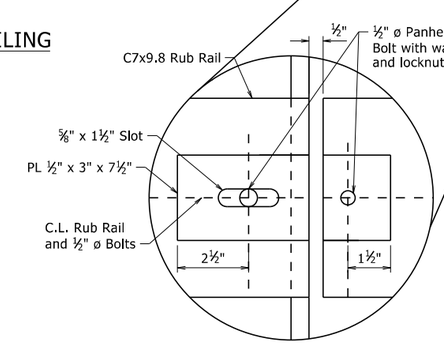

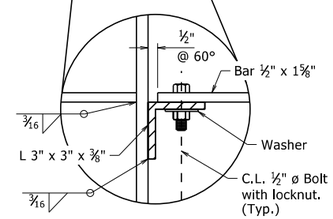

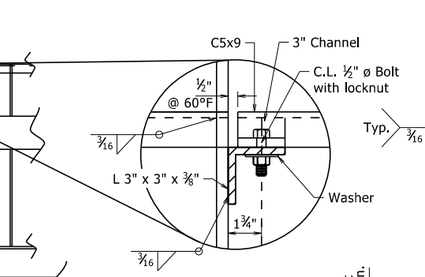

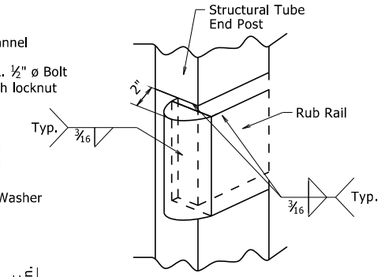

DETAIL B

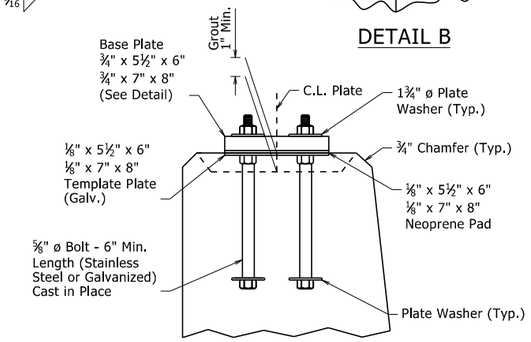

DETAILS OF POST ANCHOR SYSTEM (CAST IN PLACE ANCHORS)

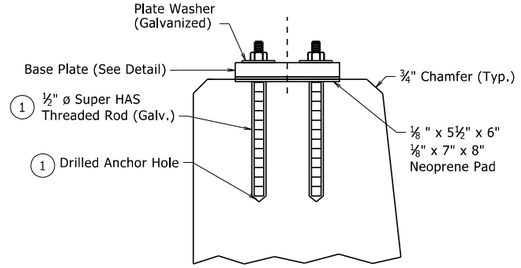

DETAILS OF ALTERNATE POST ANCHOR SYSTEM (EPOXY ADHESIVE ANCHORS)

1. Hilti HIT RE 500 Epoxy Adhesive Anchor System with 4 1/2" embedment or an approved equal. The Epoxy Adhesive Anchor System shall be installed in accordance with Manufacturer's recommendations.
2. Post Spacing shall be arranged to maintain a minimum of 2' from a junction box.
3. See Roadway Plans and Dwg. No. 66948 for additional details.

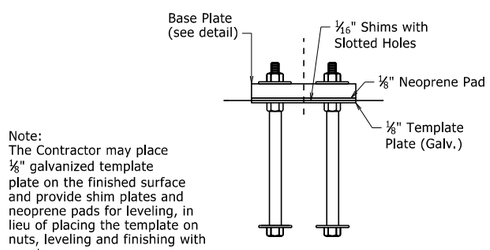

Note:
The Contractor may place 1/8" galvanized template plate on the finished surface and provide shim plates and neoprene pads for leveling, in lieu of placing the template on nuts, leveling and finishing with grout.

DETAILS OF ALTERNATE LEVELING SYSTEM

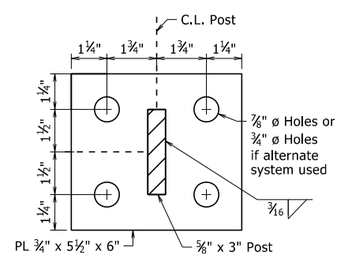

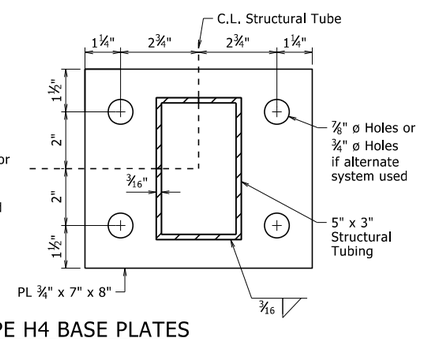

DETAILS OF TYPE H4 BASE PLATES

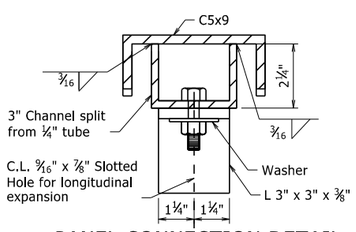

PANEL CONNECTION DETAIL

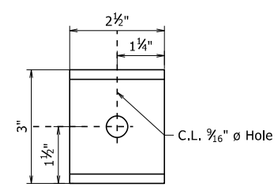

DETAILS OF 3" CHANVEL SPLIT FROM 1/4" TUBE

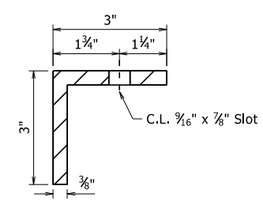

ANGLE DETAIL

STATE OF ARKANSAS
LICENSED PROFESSIONAL ENGINEER
No. 9235
9/22/23
CHARLES R. ELLIS

BRIDGE ENGINEER

DETAILS FOR
TYPE H4 RAILING
HEARTSILL CREEK & VACHE GRASSE CREEK

ROUTE SEC.
ARKANSAS STATE HIGHWAY COMMISSION
LITTLE ROCK, ARK.

DRAWN BY:	YG	DATE:	5/26/2023	FILENAME:	b040861_r2.dgn
CHECKED BY:	JCG	DATE:	6/15/2023	SCALE:	NOT TO SCALE
DESIGNED BY:	STD	DATE:	-		

BRIDGE NO. 07644 & 07645 DRAWING NO. 66950

PRINT DATE: 9/22/2023

DATE REVISED	DATE REVISED	FED. RD. DIST. NO.	STATE	JOB NO.	SHEET NO.	TOTAL SHEETS
		4	ARK.	040861	211	291
		07644 & 07645 - TRANSITIONAL RAIL - 66951				

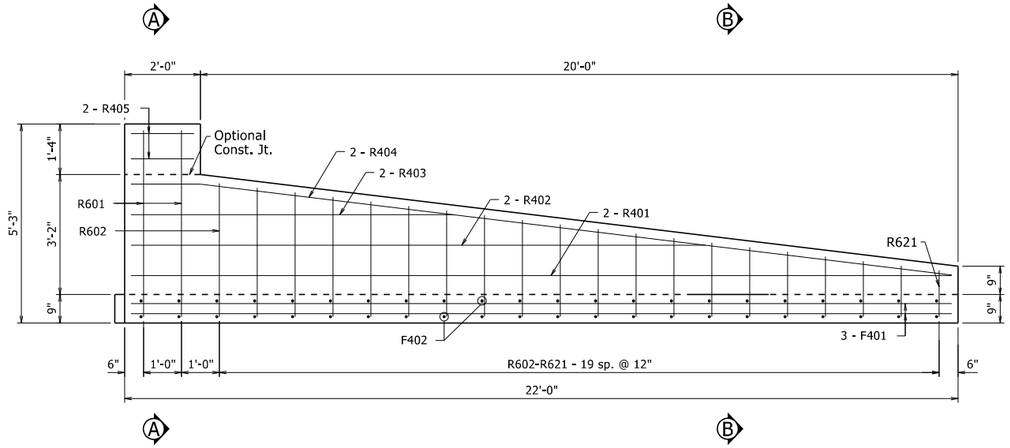

ELEVATION OF TRANSITIONAL APPROACH RAILING (SHARED USE PATH)

½" = 1'-0"

Note: End Rail shall be vertical.

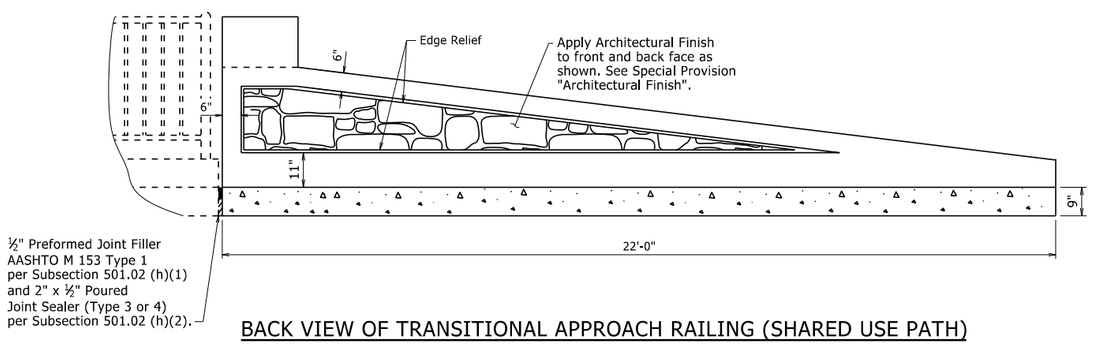

BACK VIEW OF TRANSITIONAL APPROACH RAILING (SHARED USE PATH)

½" = 1'-0"

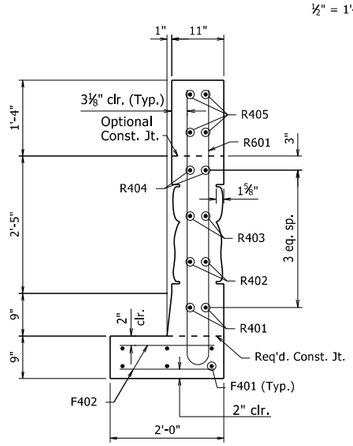

SECTION A-A

¾" = 1'-0"

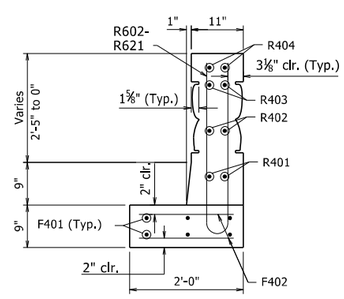

SECTION B-B

¾" = 1'-0"

GENERAL NOTES

Transitional Approach Railing (Shared Use Path) shall be placed at locations shown in plans.

All concrete shall be Class "S" with a minimum 28 day compressive strength f'c = 3,500 psi and shall be poured in the dry. All exposed corners to be chamfered 1" unless otherwise noted.

All reinforcing steel shall be Grade 60 conforming to AASHTO M 31 or M 322, Type A, with mill tests reports.

All longitudinal lines within the limits of horizontal curves shall be on curves concentric to C.L. Construction. Adjustment to longitudinal bar lengths may be required. Transverse reinforcing shall be placed on radial lines to C.L. Construction.

Unless otherwise required in the plans, curing and finishing shall be in accordance with Subsection 806.05(c) and the surface finish type and areas of application shall match that used on the adjacent bridge railing or barrier wall. See Subsection 802.19(3) for Class 3 Textured Coating Finish or Subsection 803.03(a) or 803.03(b) for Class 1 or 2 Protective Surface Treatment, respectively. Surface finishes shall not be paid for directly, but shall be considered incidental to the unit price bid for "Transitional Approach Railing."

Architectural Finish shall meet the requirements specified in Special Provision "Architectural Finish."

Payment for Class 3 Textured Coating and Architectural Finish shall be considered subsidiary to the item "Transitional Approach Railing".

Transitional Approach Railing (Shared Use Path) shall be paid for at the contract unit price bid for "Transitional Approach Railing". See Section 806 for additional information.

BAR LIST - PER TRANSITIONAL APPROACH RAIL

Mark	No. Req'd	Length	A	B	Pin. Dia.	Bending Diagram
F401	6	21'-8"			Str.	
F402	44	1'-8"			Str.	
R401	2	21'-8"			Str.	
R402	2	15'-2"			Str.	
R403	2	8'-6"			Str.	
R404	2	21'-10"	1'-10"	20'-0"	3"	
R405	4	1'-8"			Str.	
R601	2	10'-0"	4½"	4'-11"	3"	
R602-R621	1 ea.	7'-2" to 2'-7"			3'-6" to 1'-2½"	

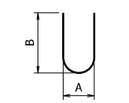

R601 thru R621

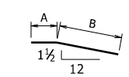

R404

Dimensions are out to out of bars.

FOR INFORMATION ONLY
SCHEDULE OF QUANTITIES FOR TRANSITIONAL APPROACH RAILING (SHARED USE PATH)

Rail Length	Concrete (Cu. Yds.)	Reinforcing Steel (Lbs.)	Textured Coating (Sq. Yds.)	Architectural Finish (Sq. Ft.)
22'-0"	2.9	407	13.6	29.8

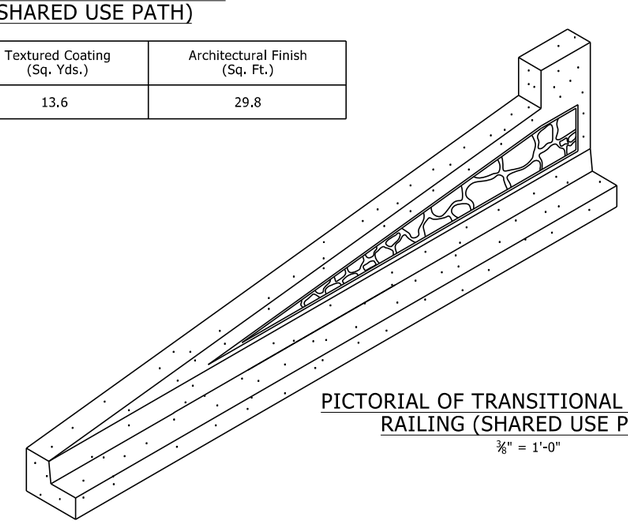

PICTORIAL OF TRANSITIONAL APPROACH RAILING (SHARED USE PATH)

⅜" = 1'-0"

STATE OF ARKANSAS
LICENSED PROFESSIONAL ENGINEER
No. 9235
9/22/23
CHARLES R. ELLIS

BRIDGE ENGINEER

DETAILS OF TRANSITIONAL APPROACH RAILING (SHARED USE PATH) HEARTSILL CREEK & VACHE GRASSE CREEK

ROUTE SEC.

ARKANSAS STATE HIGHWAY COMMISSION

LITTLE ROCK, ARK.

DRAWN BY: YG DATE: 6/5/2023 FILENAME: b040861_r3.dgn
CHECKED BY: JCG DATE: 6/16/2023 SCALE: As Noted
DESIGNED BY: STD DATE: -

BRIDGE NO. 07644 & 07645 DRAWING NO. 66951

PRINT DATE: 9/22/2023

DATE REVISED	DATE REVISED	FED. RD. DIST. NO.	STATE	JOB NO.	SHEET NO.	TOTAL SHEETS
10/25/2023		6	ARK.	040861	212	291
		07644 & 07645 - APPROACH GUTTER - 66952				

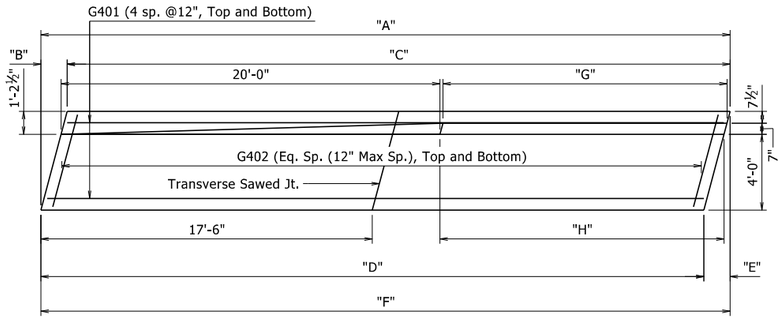

PLAN OF TYPE 1 & 4 SPECIAL APPROACH GUTTER

(Type 1 Special Approach Gutter shown,
Type 4 Special Approach Gutter opposite hand)
¼" = 1'-0"

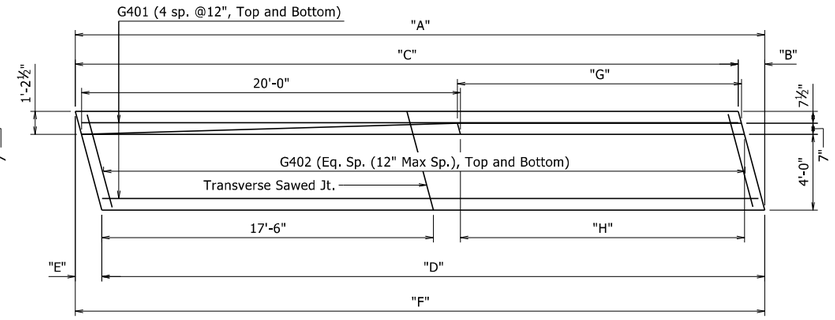

PLAN OF TYPE 2 & 3 SPECIAL APPROACH GUTTER

(Type 2 Special Approach Gutter shown,
Type 3 Special Approach Gutter opposite hand)
¼" = 1'-0"

BAR LIST - ONE APPROACH GUTTER

Mark	No. Req'd	Length	Pin. Dia.
G401	10	"V"	Str.
G402	"W"	4'-10½"	Str.
R401-R405	1 ea.	3'-1" to 4'-1"	2"
R406	"X"	4'-5"	2"
R407-R421	1 ea.	2'-6" to 5'-10"	2"
R422	2	18'-2"	Str.
R423	1	6'-11"	Str.
R424	1	7'-7"	Str.
R425	1	12'-5"	Str.
R426	1	12'-9"	Str.
R427	2	18'-0"	Str.
R428	"Y"	5'-11"	2"
R429	8	"Z"	Str.

Bending Diagram

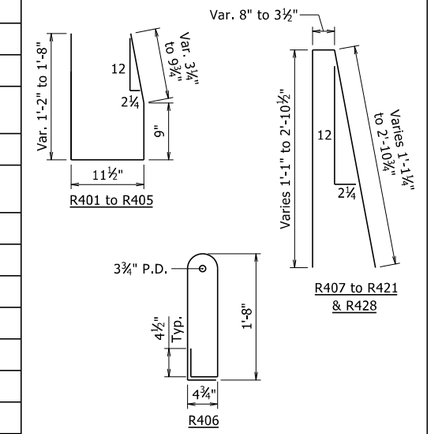

Dimensions are out to out of bars.

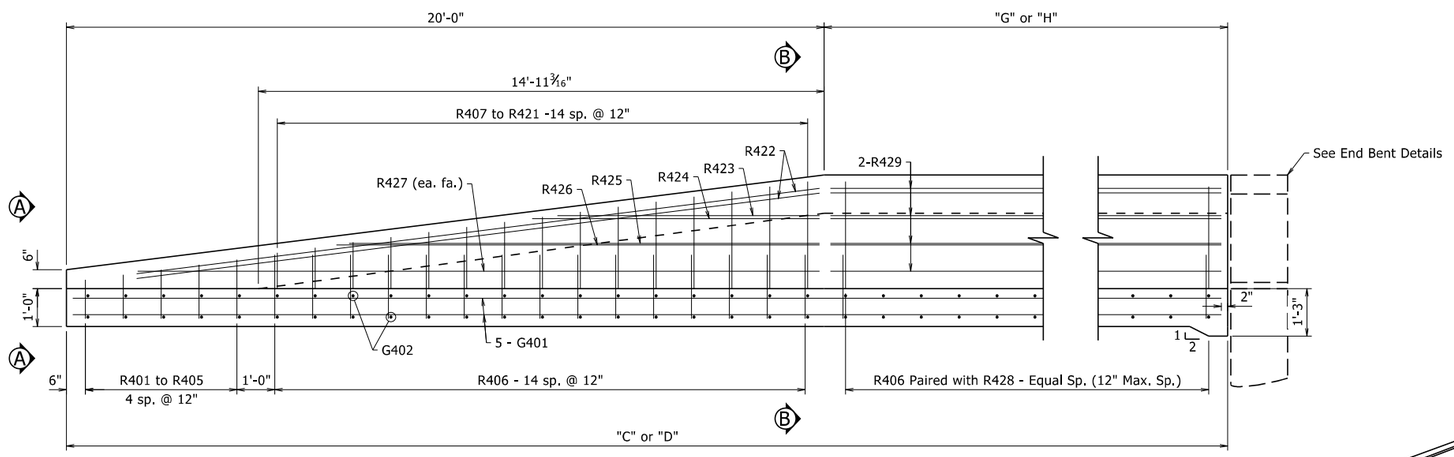

ELEVATION OF TYPE SPECIAL APPROACH GUTTER

(Type 1 & 3 Special Approach Gutter Shown,
Type 2 & 4 Special Approach Gutter opposite hand)
½" = 1'-0"

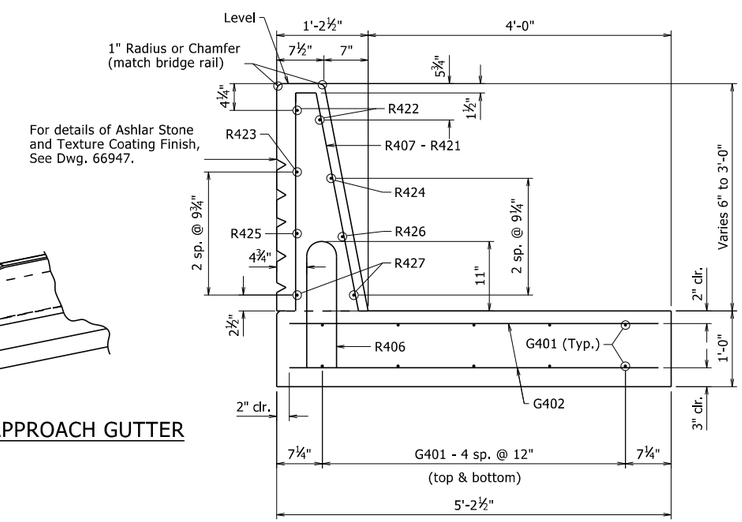

VIEW B-B

(Type 1 & 3 Special Approach Gutter shown,
Type 2 & 4 Special Approach Gutter opposite hand)
Scale 1" = 1'-0"

GENERAL NOTES

All concrete shall be Class S(AE) with a minimum 28 day compressive strength f'c = 4,000 psi and shall be poured in the dry.

All reinforcing steel shall be Grade 60 (yield strength = 60,000 psi) conforming to AASHTO M 31 or M 322, Type A, with mill test reports.

Approach Gutters will be measured and paid for in accordance with Section 504.

Longitudinal dimensions and lines within the limits of horizontal curves shall be taken along horizontal curves concentric to C.L. Const., and transverse dimensions shall be taken along radial lines to C.L. Const. Adjustment to longitudinal bar lengths may be required. Transverse reinforcing shall be placed on radial lines to C.L. Const.

Class 2 Protective Surface Treatment shall be applied to the top of the gutter, and to the roadway face and top of the concrete bridge rail.

Class 3 Textured Coating Finish shall be applied to all areas specified in Sprecial Provision "TEXTURED COATING FINISH" and in accordance with Subsection 802.19(b)(3).

Note:
Refer to "TABLE OF VARIABLES" for dimensions and bar list values.

"G" varies on the outermost length along element in plan view.
"H" varies on the innermost length along element in plan view.

QUANTITIES FOR TYPE SPECIAL APPROACH GUTTERS

(For Information Only)

Type	Reinforcing Steel (Lbs.)	Concrete (Cu. Yds.)	
1	850	~~291.60~~	1 9.90
2	818	~~286.20~~	1 9.50
3	843	~~288.60~~	1 9.80
4	~~843~~	~~292.70~~	1 10.00
	1 852		

1 Revised quantity.
By: YG 10/25/2023
Checked By: JSQ 10/25/2023

TABLE OF VARIABLES

		"A"	"B"	"C"	"D"	"E"	"F"	"G"	"H"	"V"	"W"	"X"	"Y"	"Z"
Special Approach Gutter Type	1	37'-9⅞"	1'-4 3/16"	36'-5 11/16"	36'-3 7/16"	1'-4⅜"	37'-7⅞"	16'-5 7/16"	16'-5 3/16"	35'-11"	74	31	16	16'-1"
	2	36'-4¾"	1'-4¾"	35'-0"	35'-0"	1'-4¾"	36'-4¾"	15'-0"	15'-0"	34'-8"	72	30	15	14'-8"
	3	37'-6"	1'-4 7/16"	36'-1 9/16"	35'-11⅞"	1'-4⅛"	37'-4"	16'-1⅜"	15'-11½"	35'-8"	74	31	16	15'-9"
	4	37'-11⅜"	1'-4 3/16"	36'-7 3/16"	36'-4¾"	1'-4 9/16"	37'-9 5/16"	16'-6⅞"	16'-6⅝"	36'-1"	74	31	16	16'-2"

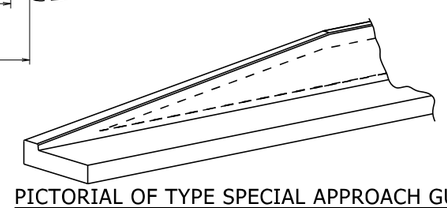

PICTORIAL OF TYPE SPECIAL APPROACH GUTTER

No Scale

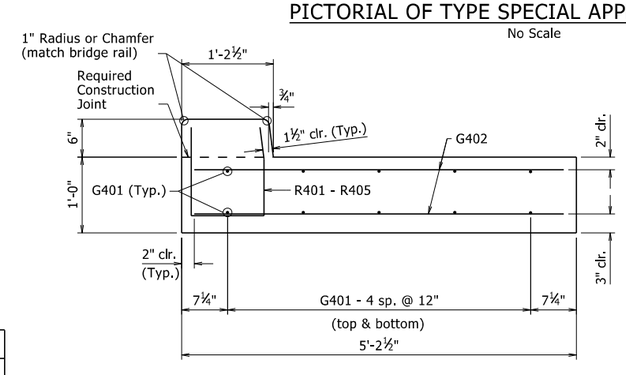

VIEW A-A

(Type 1 & 3 Special Approach Gutter shown,
Type 2 & 4 Special Approach Gutter opposite hand)
1" = 1'-0"

STATE OF ARKANSAS
Ellis, Rick
Oct 26 2023 11:17 AM
LICENSED PROFESSIONAL ENGINEER
No. 9235
CHARLES R. ELLIS

BRIDGE ENGINEER

DETAILS FOR TYPE SPECIAL APPROACH GUTTERS HEARTSILL CREEK & VACHE GRASSE CREEK

ROUTE SEC.

ARKANSAS STATE HIGHWAY COMMISSION

LITTLE ROCK, ARK.

DRAWN BY: YG DATE: 6/6/2023 FILENAME: b040861_ag.dgn
CHECKED BY: JCG DATE: 6/20/2023 SCALE: As Noted
DESIGNED BY: STD DATE: -

BRIDGE NO. 07644 & 07645 DRAWING NO. 66952

PRINT DATE: 10/26/2023

DATE REVISED	DATE REVISED	FED.RD. DIST.NO.	STATE	JOB NO.	SHEET NO.	TOTAL SHEETS
		6	ARK.	040861	213	291
		CROSS SECTIONS				

STAGE 1 | STAGE 3 | UNDERCUT | STAGE 1 | STAGE 3 | UNDERCUT

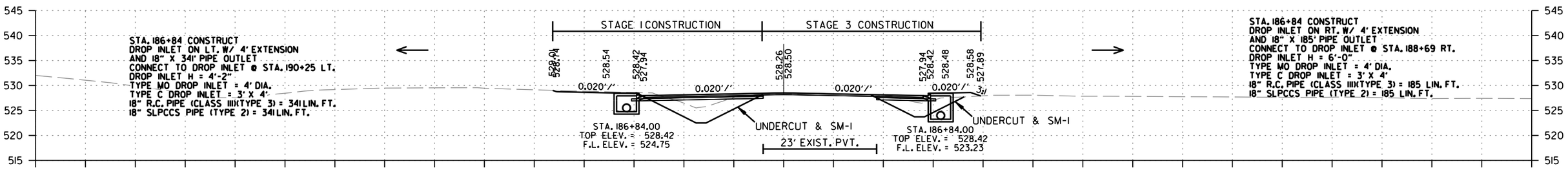

CUT AREA 15.07 SQ. FT.	CUT AREA 3.89 SQ. FT.	CUT AREA 86 SQ. FT.	CUT VOLUME 47 CU. YD.	CUT VOLUME 18 CU. YD.	CUT VOLUME 223 CU. YD.
FILL AREA 9.72 SQ. FT.	FILL AREA 9.65 SQ. FT.	FILL AREA 0 SQ. FT.	FILL VOLUME 26 CU. YD.	FILL VOLUME 23 CU. YD.	FILL VOLUME 0 CU. YD.

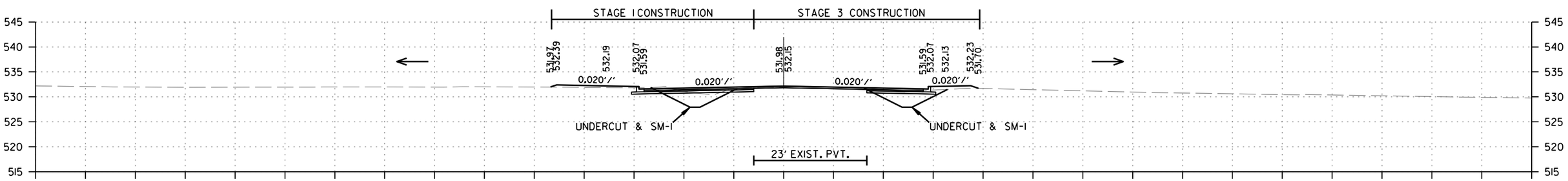

CUT AREA 15.36 SQ. FT.	CUT AREA 7.65 SQ. FT.	CUT AREA 57 SQ. FT.	CUT VOLUME 28 CU. YD.	CUT VOLUME 14 CU. YD.	CUT VOLUME 106 CU. YD.
FILL AREA 6.76 SQ. FT.	FILL AREA 5.41 SQ. FT.	FILL AREA 0 SQ. FT.	FILL VOLUME 13 CU. YD.	FILL VOLUME 10 CU. YD.	FILL VOLUME 0 CU. YD.

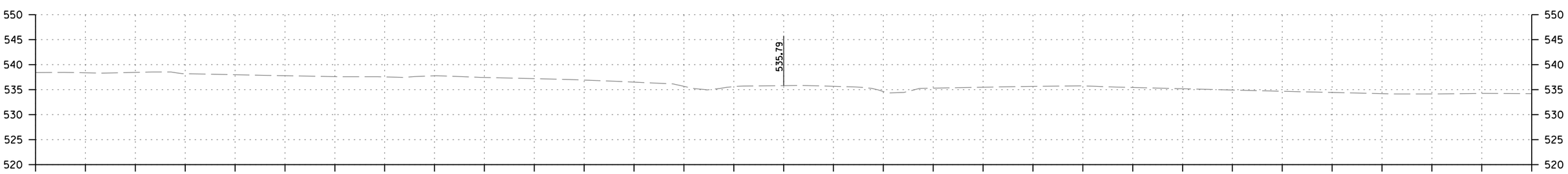

CUT AREA 0 SQ. FT.	CUT AREA 0 SQ. FT.	CUT AREA 0 SQ. FT.	CUT VOLUME 0 CU. YD.	CUT VOLUME 0 CU. YD.	CUT VOLUME 0 CU. YD.
FILL AREA 0 SQ. FT.	FILL AREA 0 SQ. FT.	FILL AREA 0 SQ. FT.	FILL VOLUME 0 CU. YD.	FILL VOLUME 0 CU. YD.	FILL VOLUME 0 CU. YD.

HWY. 10 BYPASS
STA. 185+00 TO STA. 186+84

rb43088 9/21/2023
R040861.DGN

DATE REVISED	DATE REVISED	FED.RD. DIST.NO.	STATE	JOB NO.	SHEET NO.	TOTAL SHEETS
		6	ARK.	040861	214	291
		CROSS SECTIONS				

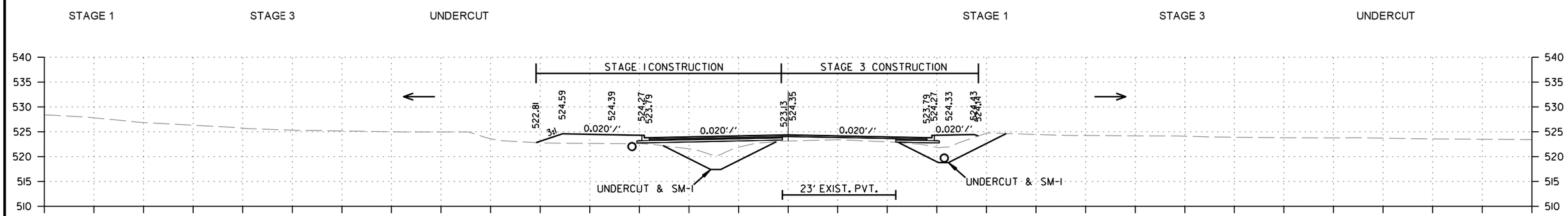

CUT AREA 0 SQ. FT. FILL AREA 66.38 SQ. FT.
CUT AREA 0 SQ. FT. FILL AREA 16.84 SQ. FT.
CUT AREA 88 SQ. FT. FILL AREA 0 SQ. FT.
CUT VOLUME 16 CU. YD. FILL VOLUME 130 CU. YD.
CUT VOLUME 14 CU. YD. FILL VOLUME 37 CU. YD.
CUT VOLUME 295 CU. YD. FILL VOLUME 0 CU. YD.

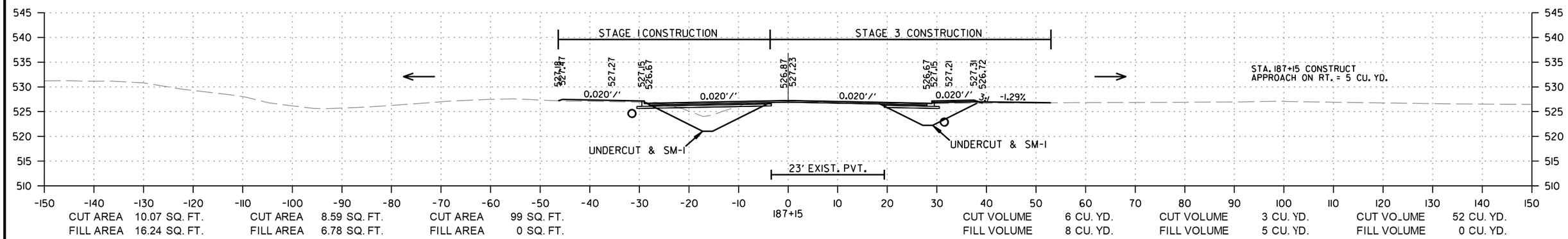

CUT AREA 10.07 SQ. FT. FILL AREA 16.24 SQ. FT.
CUT AREA 8.59 SQ. FT. FILL AREA 6.78 SQ. FT.
CUT AREA 99 SQ. FT. FILL AREA 0 SQ. FT.
CUT VOLUME 6 CU. YD. FILL VOLUME 8 CU. YD.
CUT VOLUME 3 CU. YD. FILL VOLUME 5 CU. YD.
CUT VOLUME 52 CU. YD. FILL VOLUME 0 CU. YD.

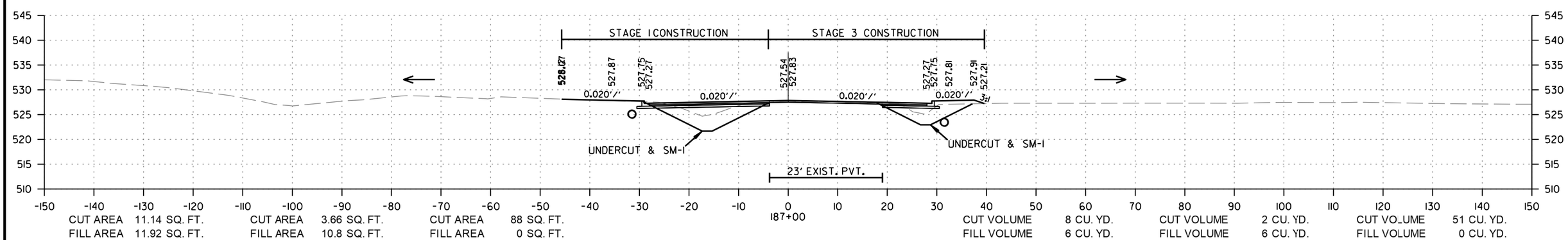

CUT AREA 11.14 SQ. FT. FILL AREA 11.92 SQ. FT.
CUT AREA 3.66 SQ. FT. FILL AREA 10.8 SQ. FT.
CUT AREA 88 SQ. FT. FILL AREA 0 SQ. FT.
CUT VOLUME 8 CU. YD. FILL VOLUME 6 CU. YD.
CUT VOLUME 2 CU. YD. FILL VOLUME 6 CU. YD.
CUT VOLUME 51 CU. YD. FILL VOLUME 0 CU. YD.

HWY. 10 BYPASS
STA. 187+00 TO STA. 188+00

rb43088 9/21/2023
R040861.DGN

DATE REVISED	DATE REVISED	FED.RD. DIST.NO.	STATE	JOB NO.	SHEET NO.	TOTAL SHEETS
		6	ARK.	040861	215	291
		CROSS SECTIONS				

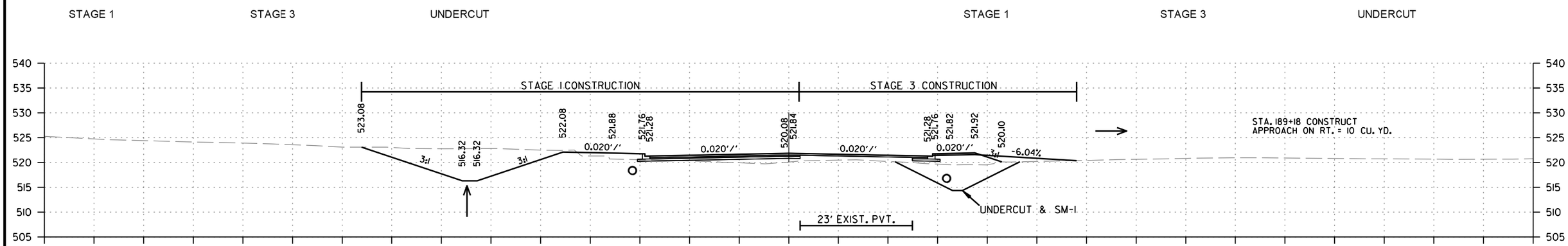

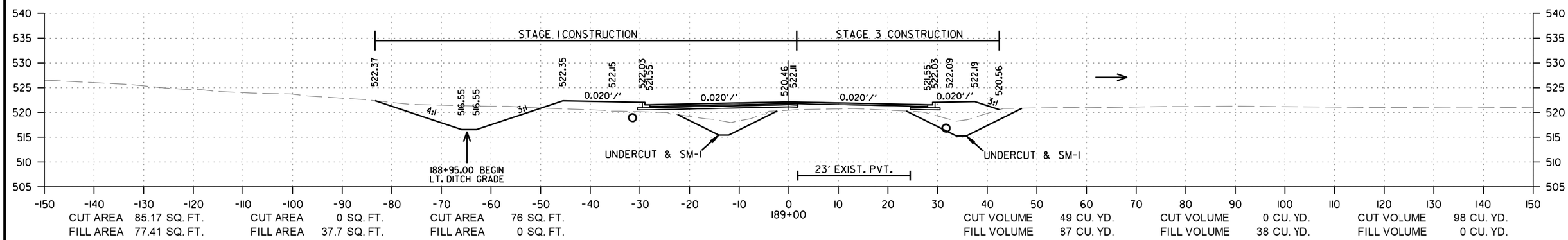

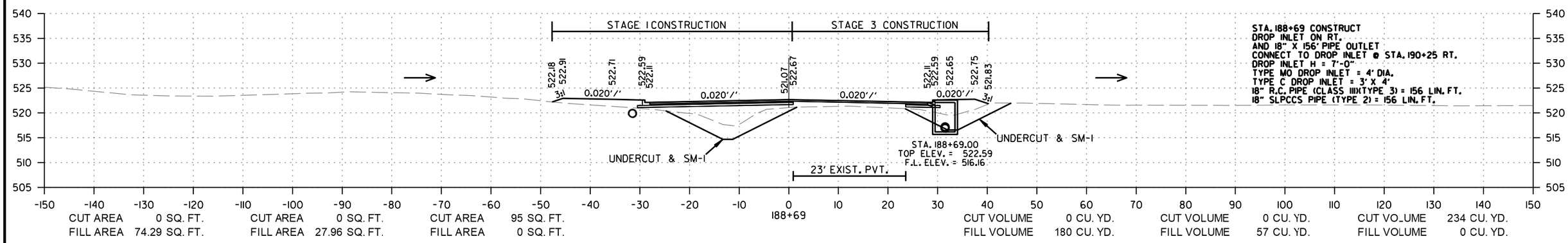

HWY. 10 BYPASS
STA. 188+69 TO STA. 189+18

rb43088 9/21/2023
R040861.DGN

DATE REVISED	DATE REVISED	FED.RD. DIST.NO.	STATE	JOB NO.	SHEET NO.	TOTAL SHEETS
		6	ARK.	040861	216	291
		CROSS SECTIONS				

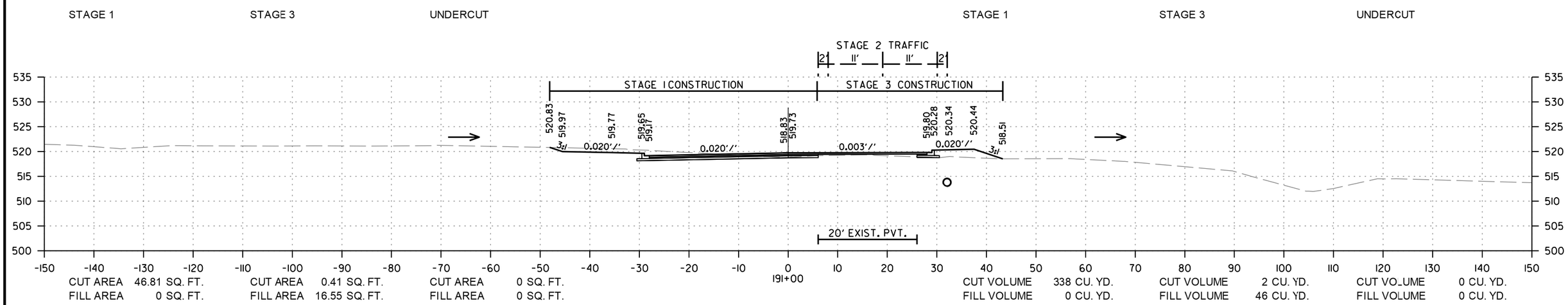

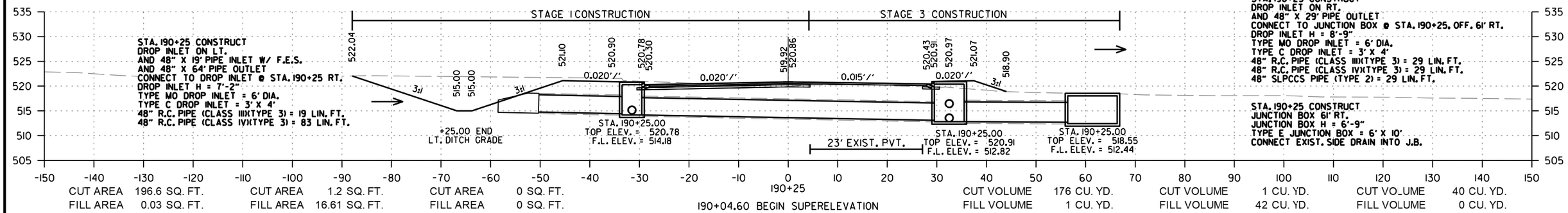

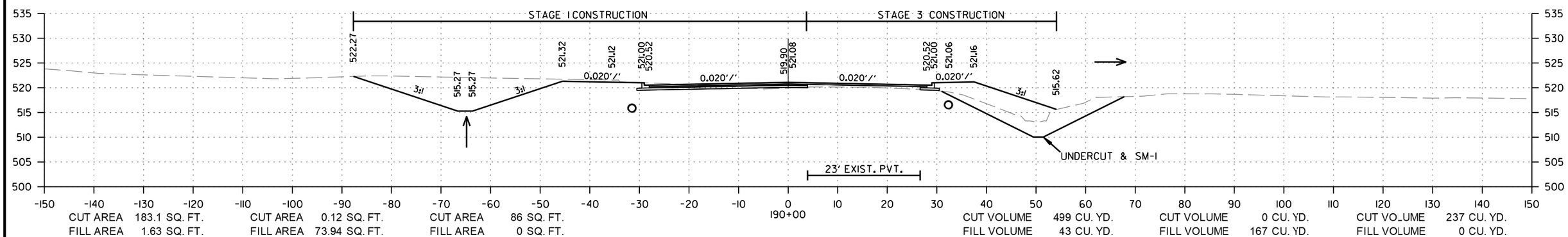

HWY. 10 BYPASS
STA. 190+00 TO STA. 191+00

rb43088 9/21/2023
R040861.DGN

DATE REVISED	DATE REVISED	FED.RD. DIST.NO.	STATE	JOB NO.	SHEET NO.	TOTAL SHEETS
		6	ARK.	040861	217	291
		CROSS SECTIONS				

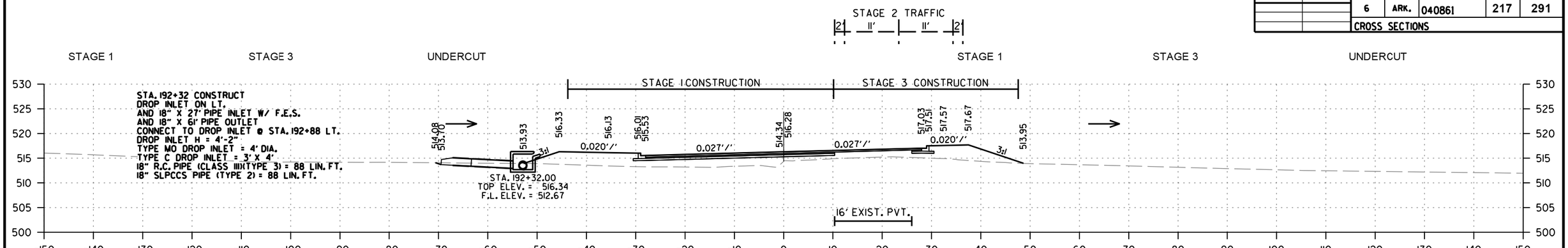

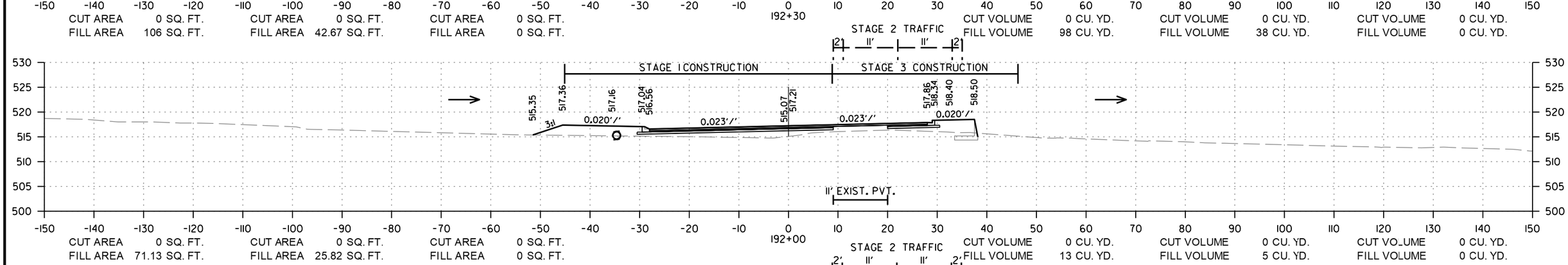

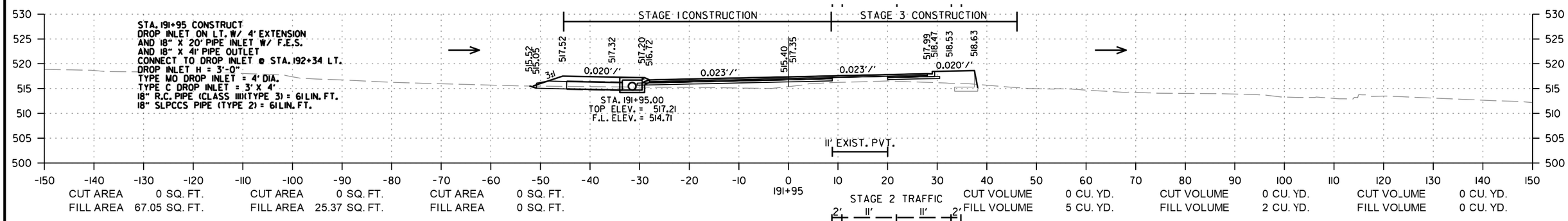

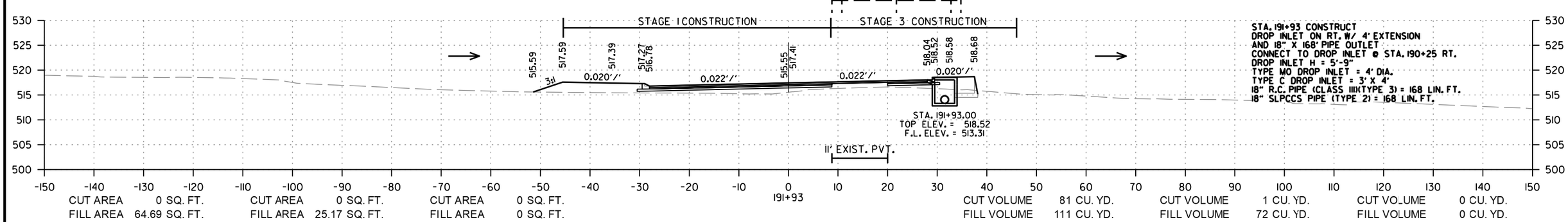

HWY. 10 BYPASS
STA. 191+93 TO STA. 192+30

rb43088 9/21/2023
R040861.DGN

DATE REVISED	DATE REVISED	FED.RD. DIST.NO.	STATE	JOB NO.	SHEET NO.	TOTAL SHEETS
		6	ARK.	040861	218	291
		CROSS SECTIONS				

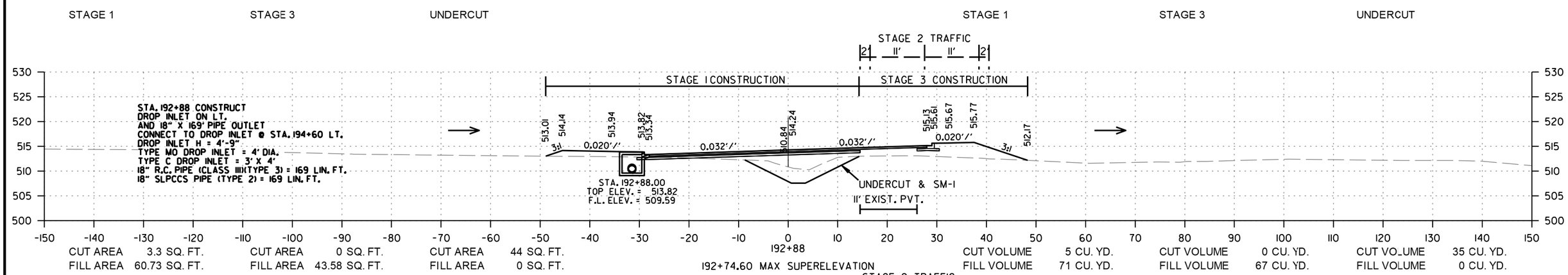

HWY. 10 BYPASS
STA. 192+41 TO STA. 192+88

rb43088 9/21/2023
R040861.DGN

DATE REVISED	DATE REVISED	FED.RD. DIST.NO.	STATE	JOB NO.	SHEET NO.	TOTAL SHEETS
		6	ARK.	040861	219	291
		CROSS SECTIONS				

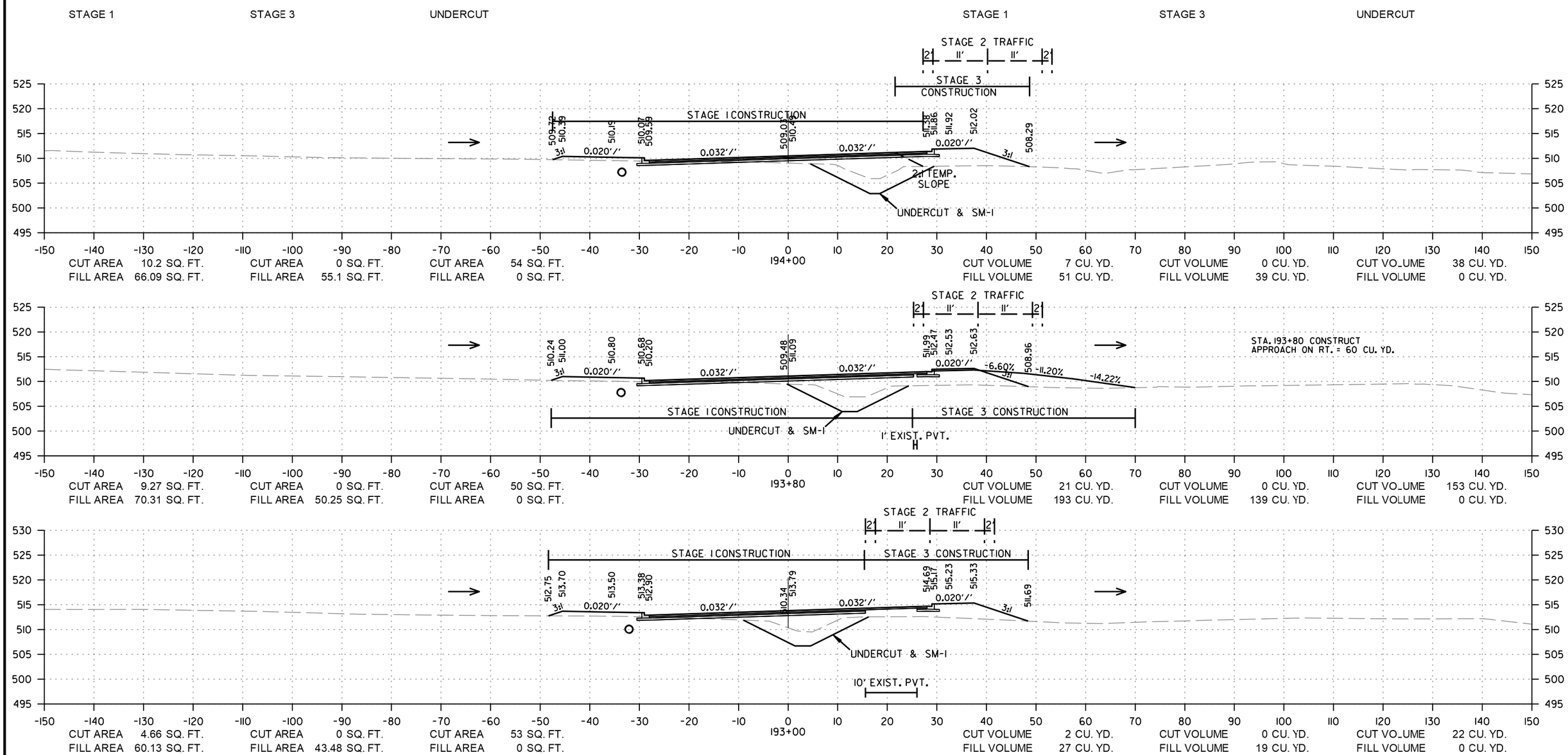

HWY. 10 BYPASS
STA. 193+00 TO STA. 194+00

rb43088 9/21/2023
R040861.DGN

DATE REVISED	DATE REVISED	FED.RD. DIST.NO.	STATE	JOB NO.	SHEET NO.	TOTAL SHEETS
		6	ARK.	040861	220	291
		CROSS SECTIONS				

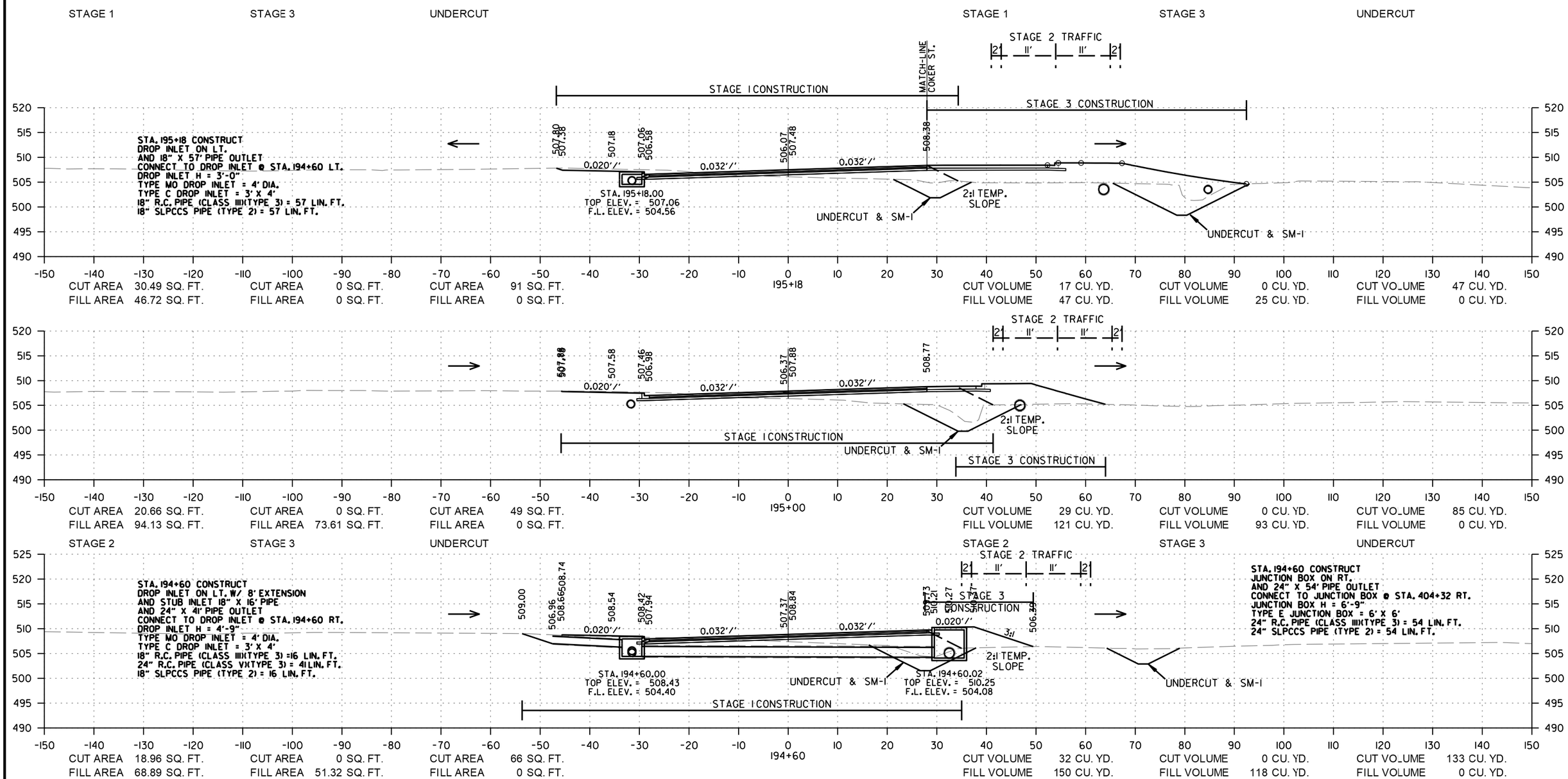

HWY. 10 BYPASS
STA. 194+60 TO STA. 195+18

rb43088 9/21/2023
R040861.DGN

DATE REVISED	DATE REVISED	FED.RD. DIST.NO.	STATE	JOB NO.	SHEET NO.	TOTAL SHEETS
		6	ARK.	040861	221	291
		CROSS SECTIONS				

STAGE 1 | UNDERCUT | STAGE 1 | UNDERCUT

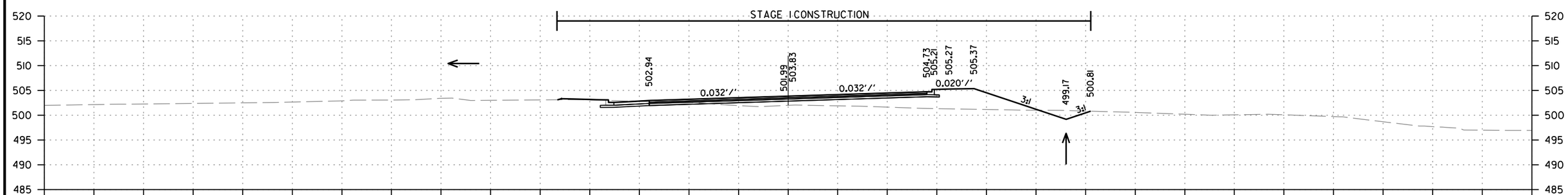

CUT AREA 26.2 SQ. FT. | CUT AREA 0 SQ. FT. | CUT VOLUME 1 CU. YD. | CUT VOLUME 0 CU. YD.
FILL AREA 115.3 SQ. FT. | FILL AREA 0 SQ. FT. | FILL VOLUME 4 CU. YD. | FILL VOLUME 0 CU. YD.

197+00

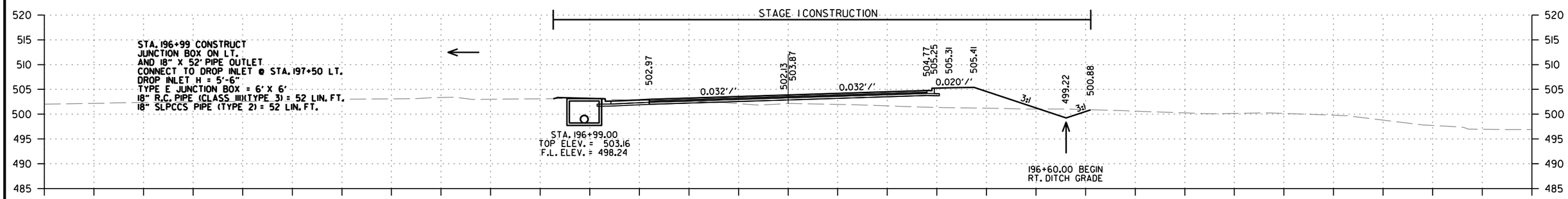

CUT AREA 27.02 SQ. FT. | CUT AREA 0 SQ. FT. | CUT VOLUME 62 CU. YD. | CUT VOLUME 0 CU. YD.
FILL AREA 112.5 SQ. FT. | FILL AREA 0 SQ. FT. | FILL VOLUME 590 CU. YD. | FILL VOLUME 0 CU. YD.

196+99

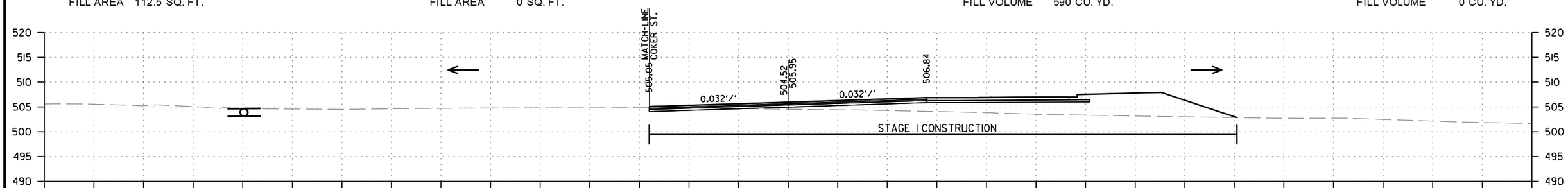

CUT AREA 7.07 SQ. FT. | CUT AREA 0 SQ. FT. | CUT VOLUME 57 CU. YD. | CUT VOLUME 139 CU. YD.
FILL AREA 209.6 SQ. FT. | FILL AREA 0 SQ. FT. | FILL VOLUME 389 CU. YD. | FILL VOLUME 0 CU. YD.

196+00

HWY. 10 BYPASS
STA. 196+00 TO STA. 197+00

rb43088 9/21/2023
R040861.DGN

DATE REVISED	DATE REVISED	FED.RD. DIST.NO.	STATE	JOB NO.	SHEET NO.	TOTAL SHEETS
		6	ARK.	040861	222	291
		CROSS SECTIONS				

STAGE 1 | UNDERCUT | STAGE 1 | UNDERCUT

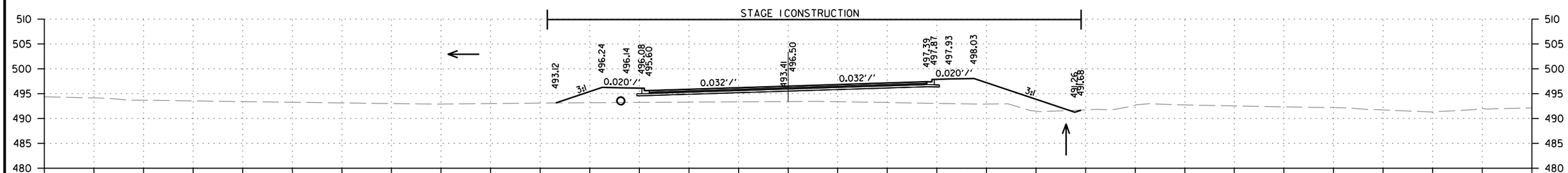

CUT AREA 0.42 SQ. FT. | CUT AREA 0 SQ. FT. | CUT VOLUME 3 CU. YD. | CUT VOLUME 0 CU. YD.
FILL AREA 257.4 SQ. FT. | FILL AREA 0 SQ. FT. | FILL VOLUME 901 CU. YD. | FILL VOLUME 0 CU. YD.

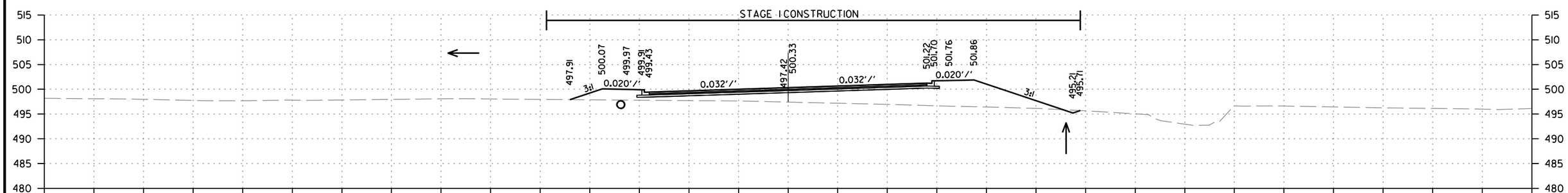

CUT AREA 0.98 SQ. FT. | CUT AREA 0 SQ. FT. | CUT VOLUME 7 CU. YD. | CUT VOLUME 0 CU. YD.
FILL AREA 229 SQ. FT. | FILL AREA 0 SQ. FT. | FILL VOLUME 344 CU. YD. | FILL VOLUME 0 CU. YD.

CUT AREA 6.55 SQ. FT. | CUT AREA 0 SQ. FT. | CUT VOLUME 30 CU. YD. | CUT VOLUME 0 CU. YD.
FILL AREA 142.8 SQ. FT. | FILL AREA 0 SQ. FT. | FILL VOLUME 239 CU. YD. | FILL VOLUME 0 CU. YD.

HWY. 10 BYPASS
STA. 197+50 TO STA. 199+00

rb43088 9/21/2023
R040861.DGN

DATE REVISED	DATE REVISED	FED.RD. DIST.NO.	STATE	JOB NO.	SHEET NO.	TOTAL SHEETS
		6	ARK.	040861	223	291
		CROSS SECTIONS				

STAGE 1 | UNDERCUT | STAGE 1 | UNDERCUT

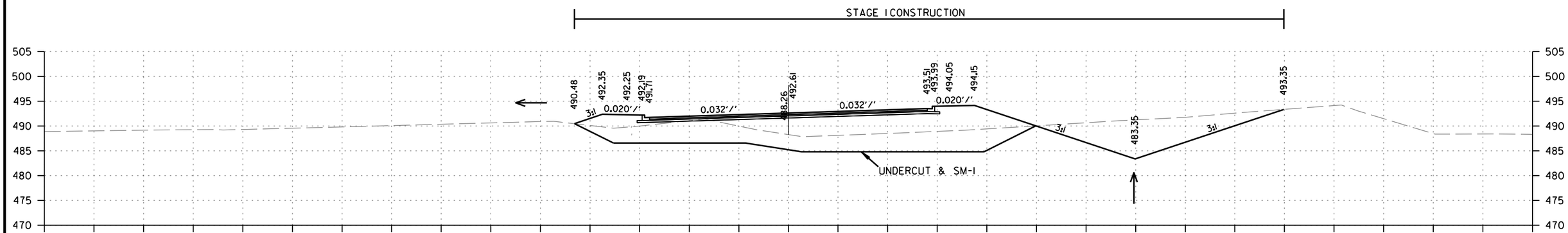

CUT AREA 195.9 SQ. FT.
FILL AREA 237.6 SQ. FT.

CUT AREA 311 SQ. FT.
FILL AREA 0 SQ. FT.

201+00

CUT VOLUME 384 CU. YD.
FILL VOLUME 861 CU. YD.

CUT VOLUME 576 CU. YD.
FILL VOLUME 0 CU. YD.

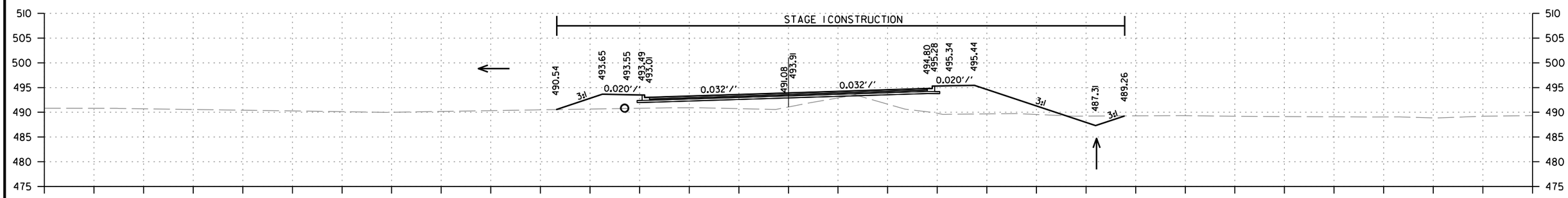

CUT AREA 11.34 SQ. FT.
FILL AREA 227.2 SQ. FT.

CUT AREA 0 SQ. FT.
FILL AREA 0 SQ. FT.

200+00

CUT VOLUME 19 CU. YD.
FILL VOLUME 435 CU. YD.

CUT VOLUME 0 CU. YD.
FILL VOLUME 0 CU. YD.

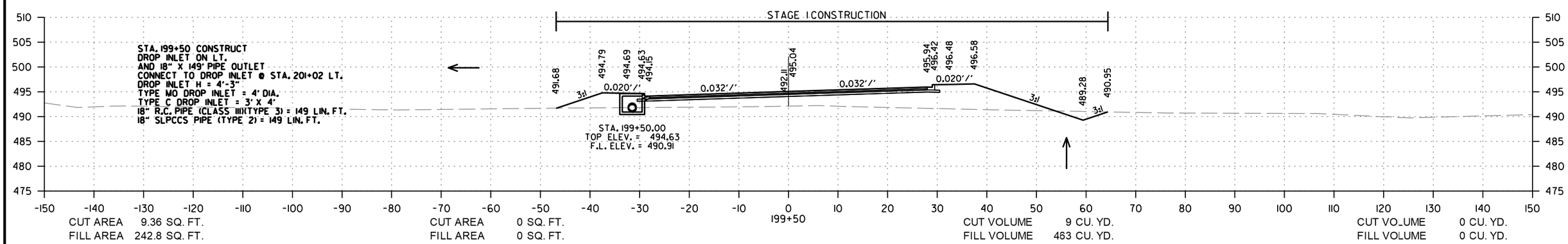

CUT AREA 9.36 SQ. FT.
FILL AREA 242.8 SQ. FT.

CUT AREA 0 SQ. FT.
FILL AREA 0 SQ. FT.

199+50

CUT VOLUME 9 CU. YD.
FILL VOLUME 463 CU. YD.

CUT VOLUME 0 CU. YD.
FILL VOLUME 0 CU. YD.

HWY. 10 BYPASS
STA. 199+50 TO STA. 201+00

rb43088 9/21/2023
R040861.DGN

DATE REVISED	DATE REVISED	FED.RD. DIST.NO.	STATE	JOB NO.	SHEET NO.	TOTAL SHEETS
		6	ARK.	040861	224	291
		CROSS SECTIONS				

STAGE 1 | UNDERCUT | STAGE 1 | UNDERCUT

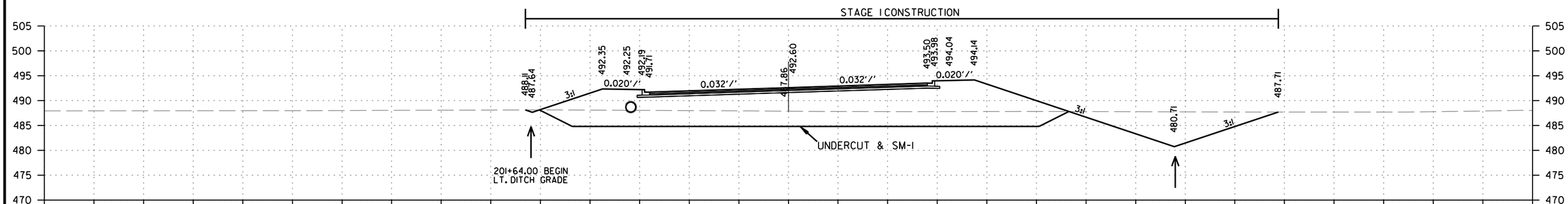

CUT AREA 149.3 SQ. FT.
FILL AREA 389.9 SQ. FT.

CUT AREA 310 SQ. FT.
FILL AREA 0 SQ. FT.

CUT VOLUME 203 CU. YD.
FILL VOLUME 468 CU. YD.

CUT VOLUME 402 CU. YD.
FILL VOLUME 0 CU. YD.

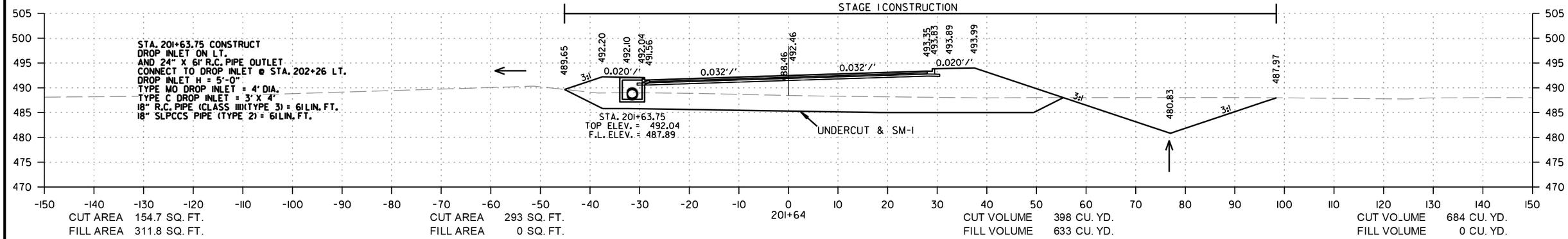

CUT AREA 154.7 SQ. FT.
FILL AREA 311.8 SQ. FT.

CUT AREA 293 SQ. FT.
FILL AREA 0 SQ. FT.

CUT VOLUME 398 CU. YD.
FILL VOLUME 633 CU. YD.

CUT VOLUME 684 CU. YD.
FILL VOLUME 0 CU. YD.

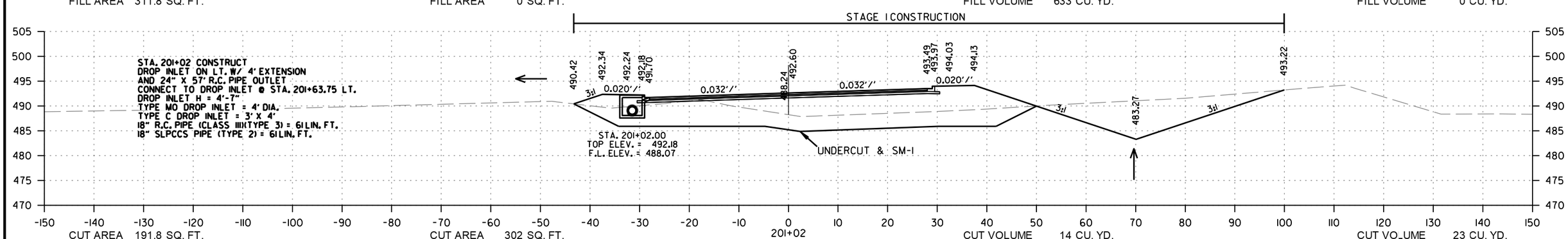

CUT AREA 191.8 SQ. FT.
FILL AREA 239.1 SQ. FT.

CUT AREA 302 SQ. FT.
FILL AREA 0 SQ. FT.

CUT VOLUME 14 CU. YD.
FILL VOLUME 18 CU. YD.

CUT VOLUME 23 CU. YD.
FILL VOLUME 0 CU. YD.

HWY. 10 BYPASS
STA. 201+02 TO STA. 202+00

rb43088 9/21/2023
R040861.DGN

DATE REVISED	DATE REVISED	FED.RD. DIST.NO.	STATE	JOB NO.	SHEET NO.	TOTAL SHEETS
		6	ARK.	040861	225	291
		CROSS SECTIONS				

STAGE 1 | UNDERCUT | STAGE 1 | UNDERCUT

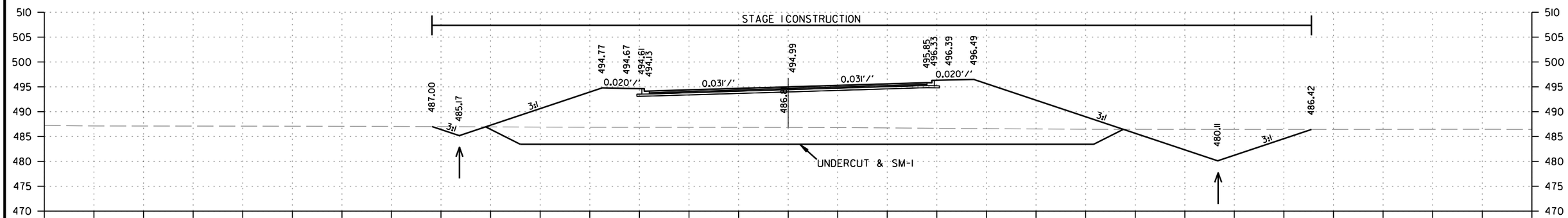

CUT AREA 129.4 SQ. FT.
FILL AREA 807.1 SQ. FT.

CUT AREA 401 SQ. FT.
FILL AREA 0 SQ. FT.

204+00
203+87.74 MAX SUPERELEVATION

CUT VOLUME 493 CU. YD.
FILL VOLUME 2585 CU. YD.

CUT VOLUME 1383 CU. YD.
FILL VOLUME 0 CU. YD.

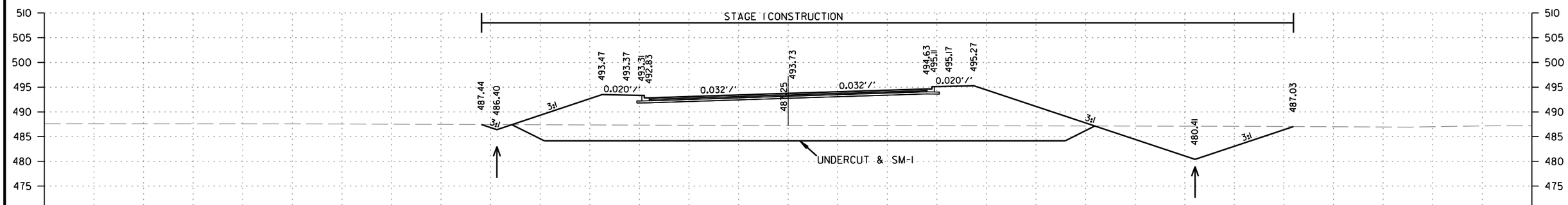

CUT AREA 137 SQ. FT.
FILL AREA 588.8 SQ. FT.

CUT AREA 346 SQ. FT.
FILL AREA 0 SQ. FT.

203+00

CUT VOLUME 385 CU. YD.
FILL VOLUME 1411 CU. YD.

CUT VOLUME 911 CU. YD.
FILL VOLUME 0 CU. YD.

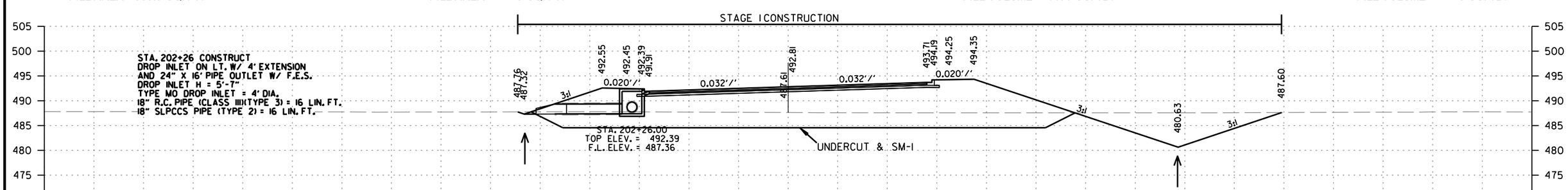

CUT AREA 144.3 SQ. FT.
FILL AREA 440.5 SQ. FT.

CUT AREA 319 SQ. FT.
FILL AREA 0 SQ. FT.

202+26

CUT VOLUME 141 CU. YD.
FILL VOLUME 400 CU. YD.

CUT VOLUME 303 CU. YD.
FILL VOLUME 0 CU. YD.

HWY. 10 BYPASS
STA. 202+26 TO STA. 204+00

rb43088 9/21/2023
R040861.DGN

DATE REVISED	DATE REVISED	FED.RD. DIST.NO.	STATE	JOB NO.	SHEET NO.	TOTAL SHEETS
		6	ARK.	040861	226	291
		CROSS SECTIONS				

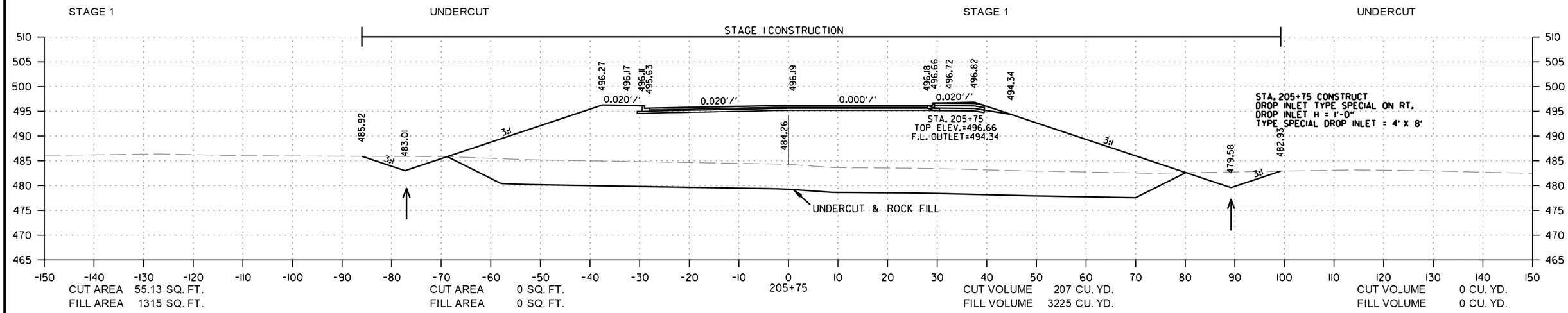

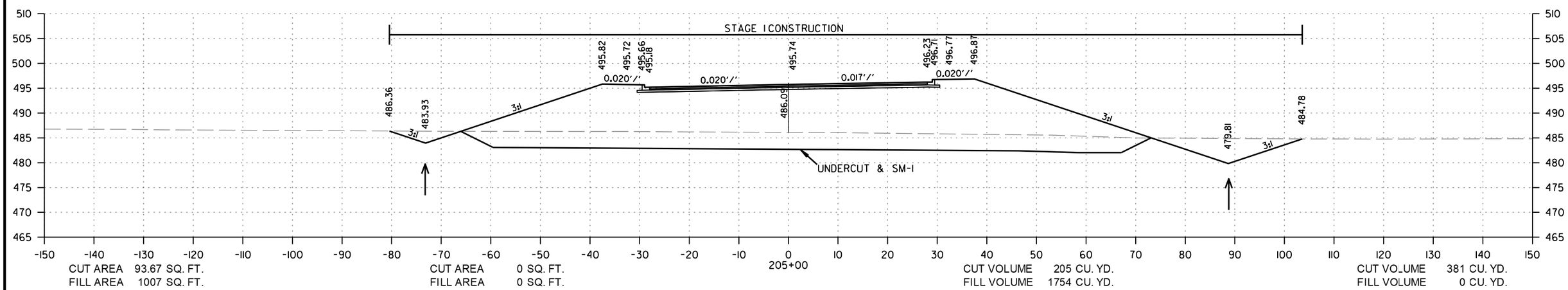

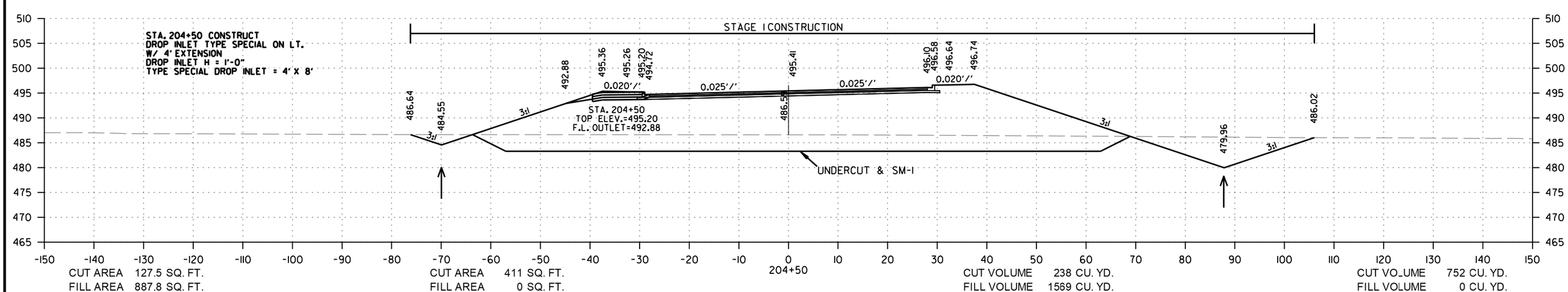

HWY. 10 BYPASS
STA. 204+50 TO STA. 205+75

rb43088 9/21/2023
R040861.DGN

DATE REVISED	DATE REVISED	FED.RD. DIST.NO.	STATE	JOB NO.	SHEET NO.	TOTAL SHEETS
		6	ARK.	040861	227	291
		CROSS SECTIONS				

STAGE 1 UNDERCUT STAGE 1 UNDERCUT

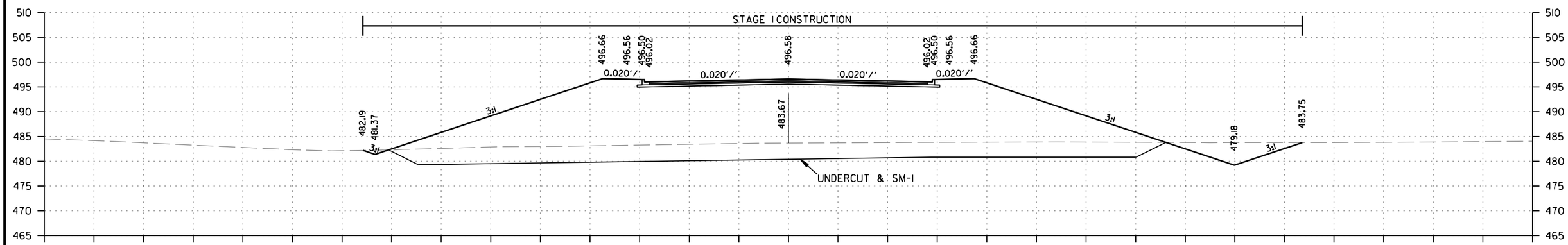

CUT AREA 64.91 SQ. FT.
FILL AREA 1430 SQ. FT.

CUT AREA 482 SQ. FT.
FILL AREA 0 SQ. FT.

207+07.86
BRIDGE END

CUT VOLUME 18 CU. YD.
FILL VOLUME 420 CU. YD.

CUT VOLUME 141 CU. YD.
FILL VOLUME 0 CU. YD.

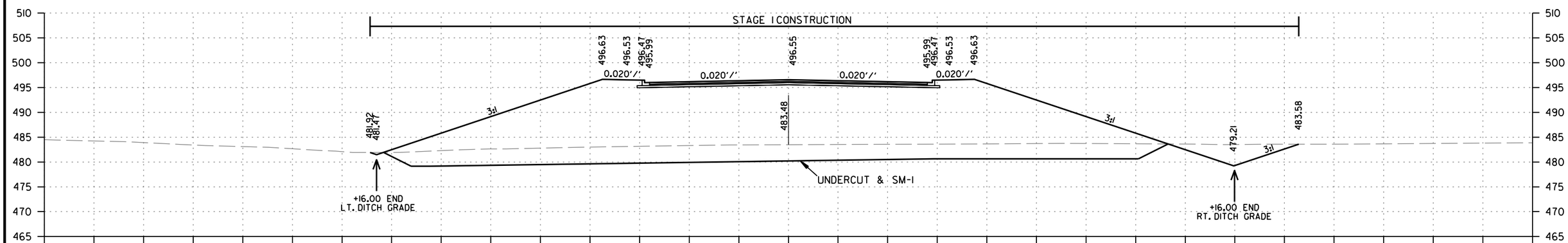

CUT AREA 57.4 SQ. FT.
FILL AREA 1457 SQ. FT.

CUT AREA 485 SQ. FT.
FILL AREA 0 SQ. FT.

207+00
206+57.74 END SUPERELEVATION

CUT VOLUME 180 CU. YD.
FILL VOLUME 5300 CU. YD.

CUT VOLUME 898 CU. YD.
FILL VOLUME 0 CU. YD.

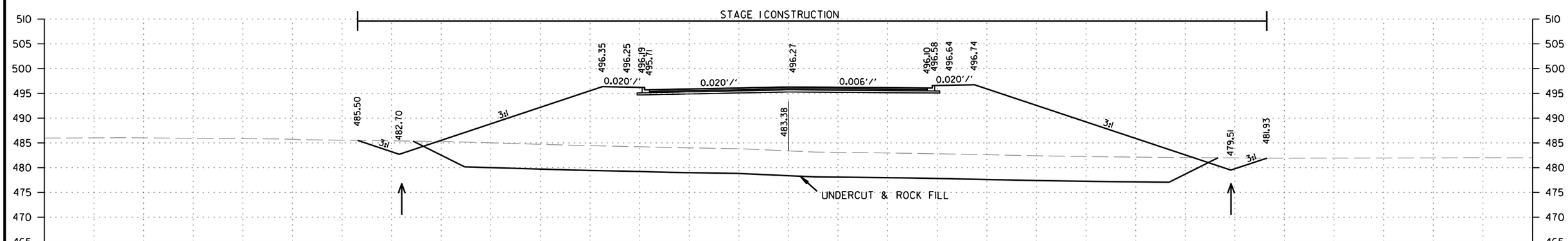

CUT AREA 40.01 SQ. FT.
FILL AREA 1405 SQ. FT.

CUT AREA 0 SQ. FT.
FILL AREA 0 SQ. FT.

206+00

CUT VOLUME 44 CU. YD.
FILL VOLUME 1259 CU. YD.

CUT VOLUME 0 CU. YD.
FILL VOLUME 0 CU. YD.

HWY. 10 BYPASS
STA. 206+00 TO STA. 208+00

rb43088 9/21/2023
R040861.DGN

DATE REVISED	DATE REVISED	FED.RD. DIST.NO.	STATE	JOB NO.	SHEET NO.	TOTAL SHEETS
		6	ARK.	040861	228	291
		CROSS SECTIONS				

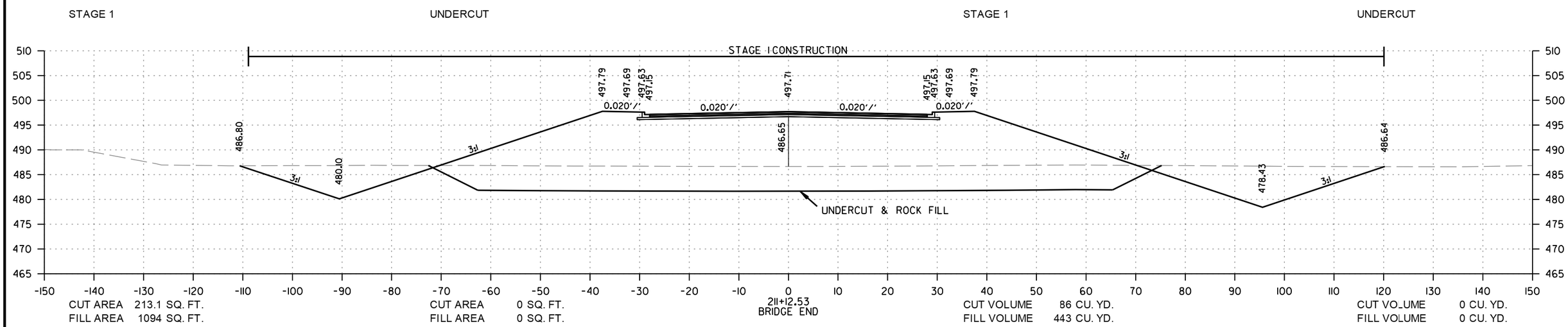

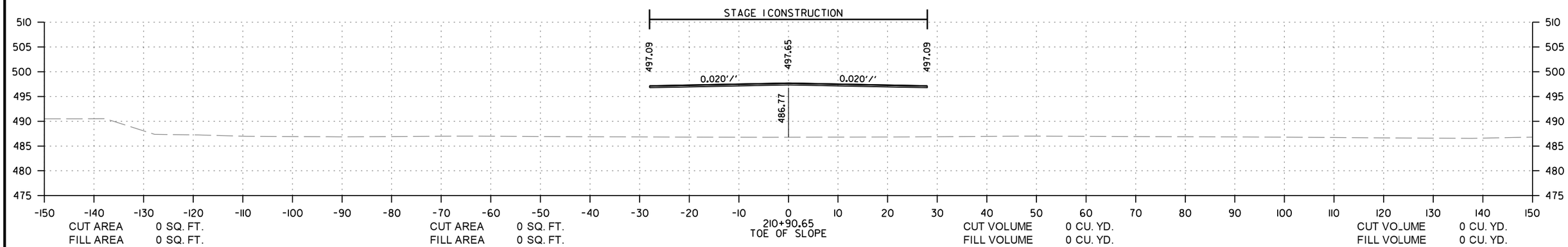

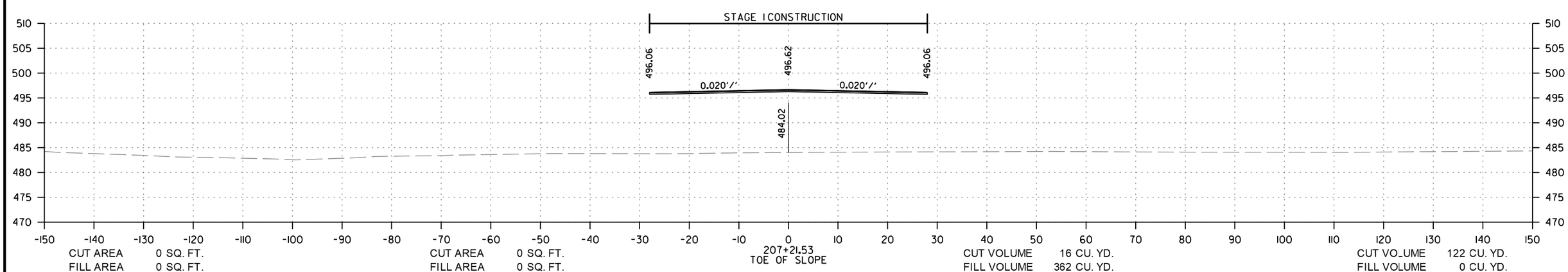

HWY. 10 BYPASS
STA. 207+21.53 TO STA. 211+12.53

rb43088 9/21/2023
R040861.DGN

DATE REVISED	DATE REVISED	FED.RD. DIST.NO.	STATE	JOB NO.	SHEET NO.	TOTAL SHEETS
		6	ARK.	040861	229	291
		CROSS SECTIONS				

STAGE 1 UNDERCUT STAGE 1 UNDERCUT

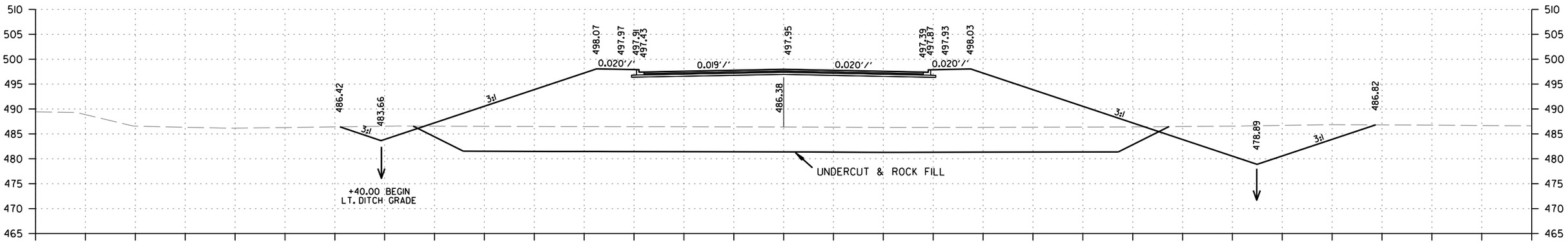

CUT AREA 205.3 SQ. FT.
FILL AREA 1197 SQ. FT.

CUT AREA 0 SQ. FT.
FILL AREA 0 SQ. FT.

212+00

211+95.00 BEGIN SUPERELEVATION

CUT VOLUME 604 CU. YD.
FILL VOLUME 2808 CU. YD.

CUT VOLUME 0 CU. YD.
FILL VOLUME 0 CU. YD.

STAGE 1 CONSTRUCTION

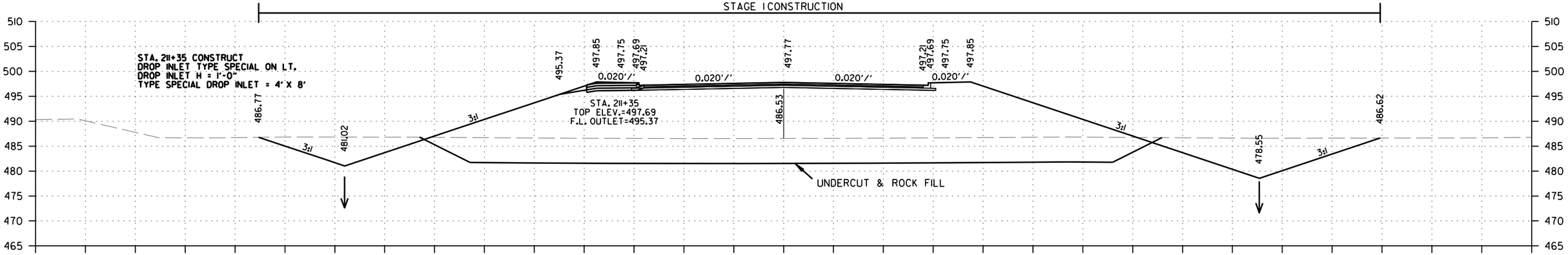

CUT AREA 296.5 SQ. FT.
FILL AREA 1136 SQ. FT.

CUT AREA 0 SQ. FT.
FILL AREA 0 SQ. FT.

211+35

CUT VOLUME 173 CU. YD.
FILL VOLUME 626 CU. YD.

CUT VOLUME 0 CU. YD.
FILL VOLUME 0 CU. YD.

STAGE 1 CONSTRUCTION

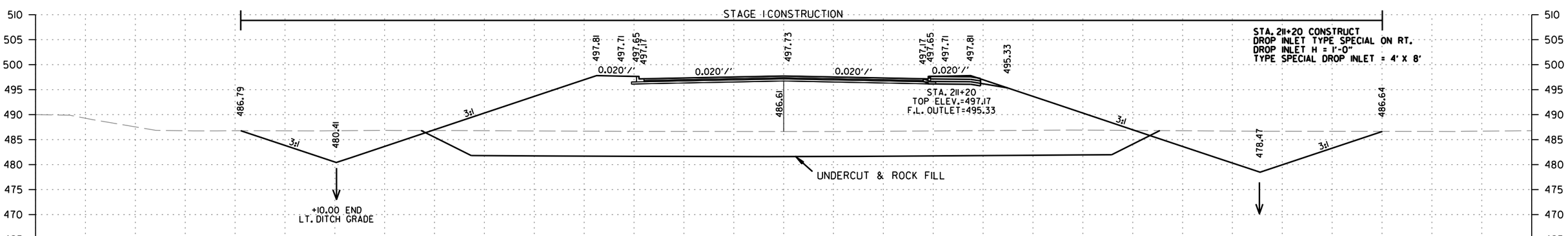

CUT AREA 325.9 SQ. FT.
FILL AREA 1117 SQ. FT.

CUT AREA 0 SQ. FT.
FILL AREA 0 SQ. FT.

211+20

CUT VOLUME 75 CU. YD.
FILL VOLUME 306 CU. YD.

CUT VOLUME 0 CU. YD.
FILL VOLUME 0 CU. YD.

HWY. 10 BYPASS
STA. 211+20 TO STA. 212+00

rb43088 9/21/2023
R040861.DGN

DATE REVISED	DATE REVISED	FED.RD. DIST.NO.	STATE	JOB NO.	SHEET NO.	TOTAL SHEETS
		6	ARK.	040861	230	291
		CROSS SECTIONS				

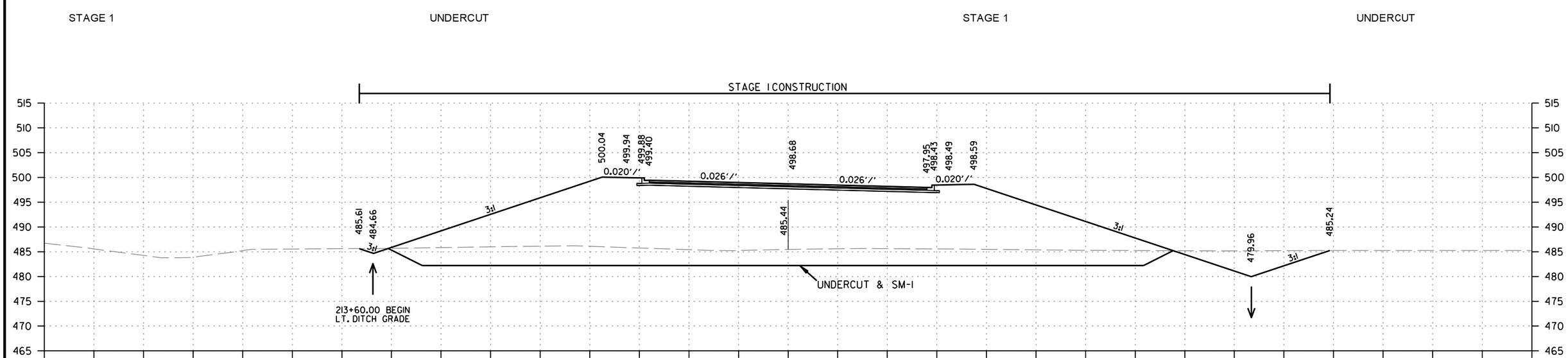

CUT AREA 85.15 SQ. FT.
FILL AREA 1497 SQ. FT.

CUT AREA 511 SQ. FT.
FILL AREA 0 SQ. FT.

CUT VOLUME 388 CU. YD.
FILL VOLUME 4567 CU. YD.

CUT VOLUME 1816 CU. YD.
FILL VOLUME 0 CU. YD.

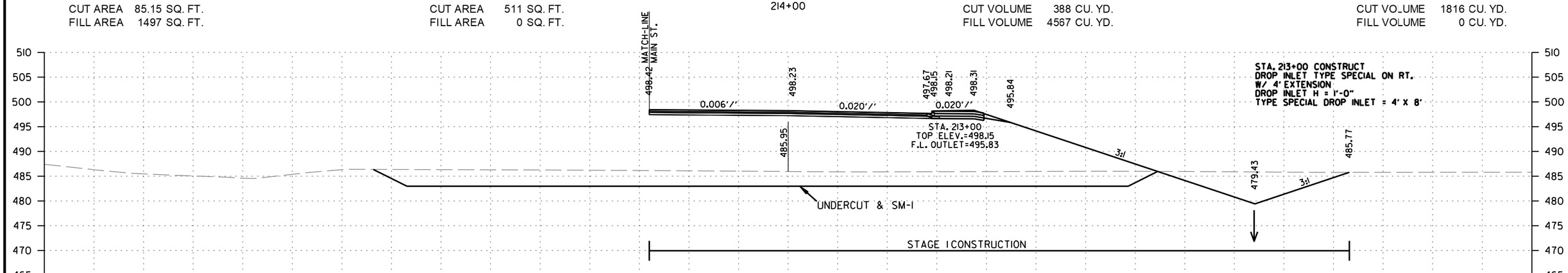

CUT AREA 124.5 SQ. FT.
FILL AREA 969.3 SQ. FT.

CUT AREA 469 SQ. FT.
FILL AREA 0 SQ. FT.

CUT VOLUME 611 CU. YD.
FILL VOLUME 4011 CU. YD.

CUT VOLUME 869 CU. YD.
FILL VOLUME 0 CU. YD.

HWY. 10 BYPASS
STA. 213+00 TO STA. 214+00

rb43088 9/21/2023
R040861.DGN

DATE REVISED	DATE REVISED	FED.RD. DIST.NO.	STATE	JOB NO.	SHEET NO.	TOTAL SHEETS
		6	ARK.	040861	231	291
		CROSS SECTIONS				

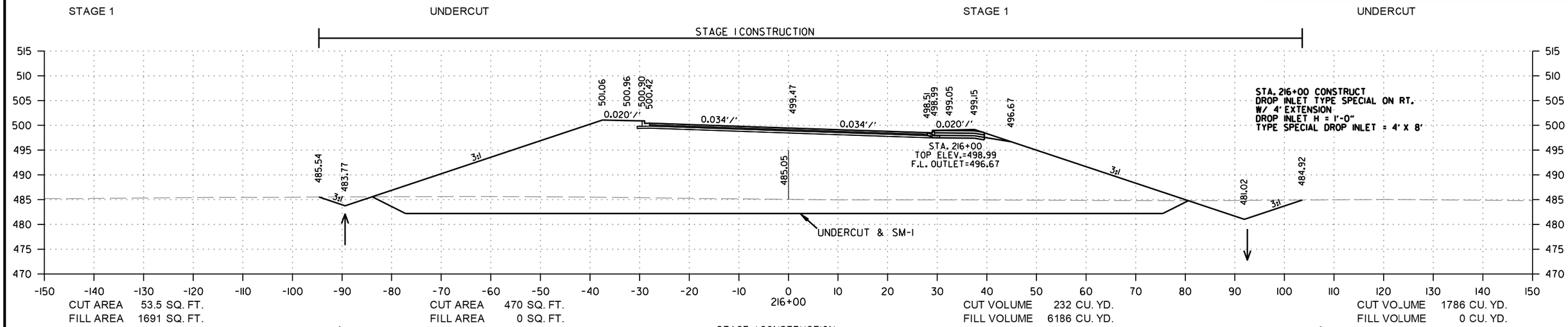

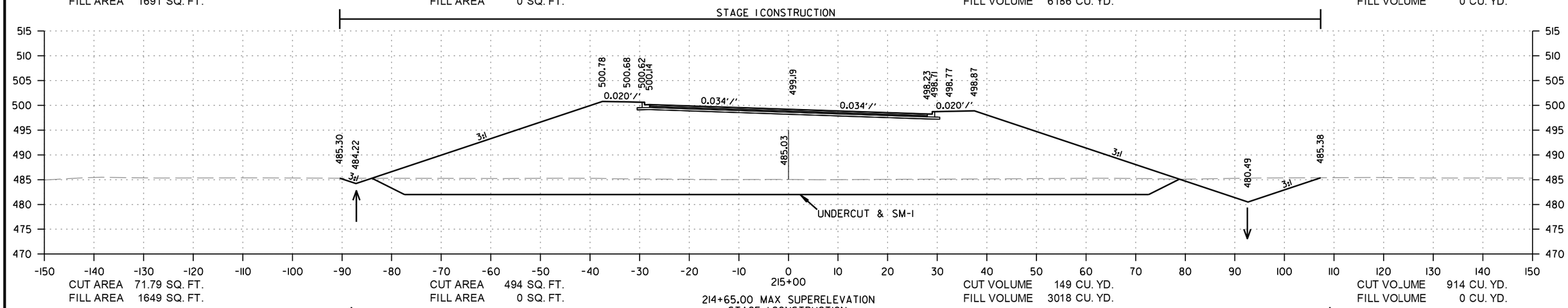

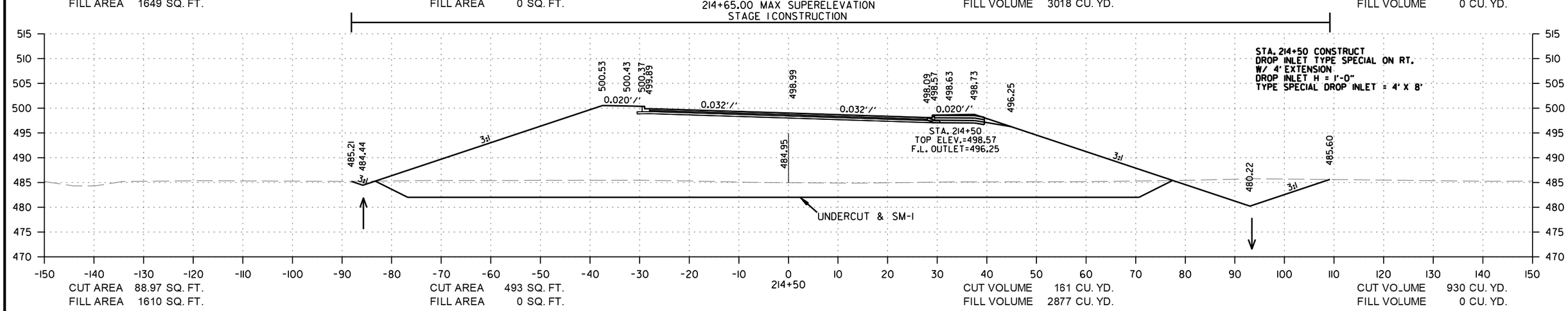

HWY. 10 BYPASS
STA. 214+50 TO STA. 216+00

rb43088 9/21/2023
R040861.DGN

DATE REVISED	DATE REVISED	FED.RD. DIST.NO.	STATE	JOB NO.	SHEET NO.	TOTAL SHEETS
		6	ARK.	040861	232	291
		CROSS SECTIONS				

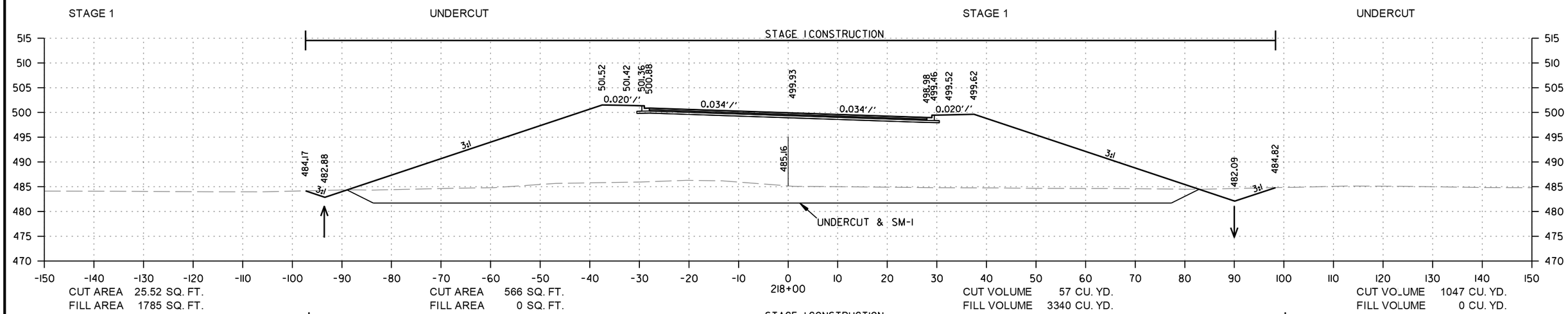

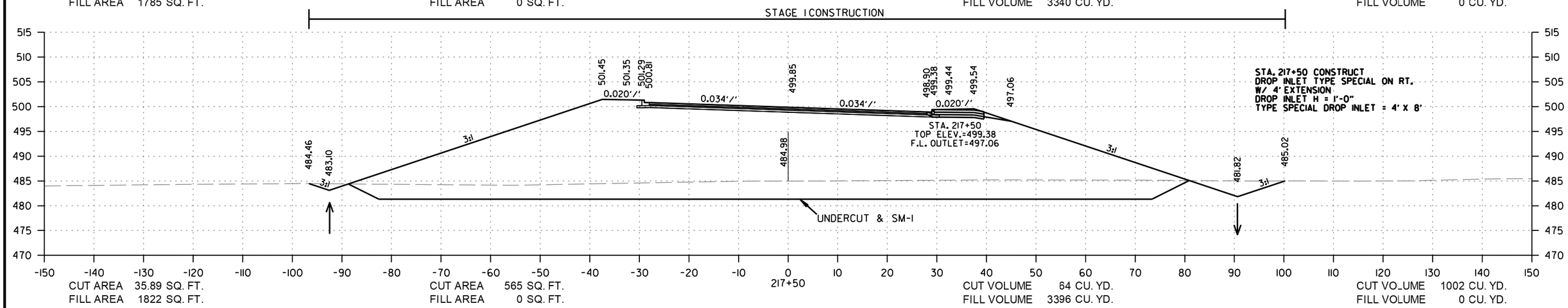

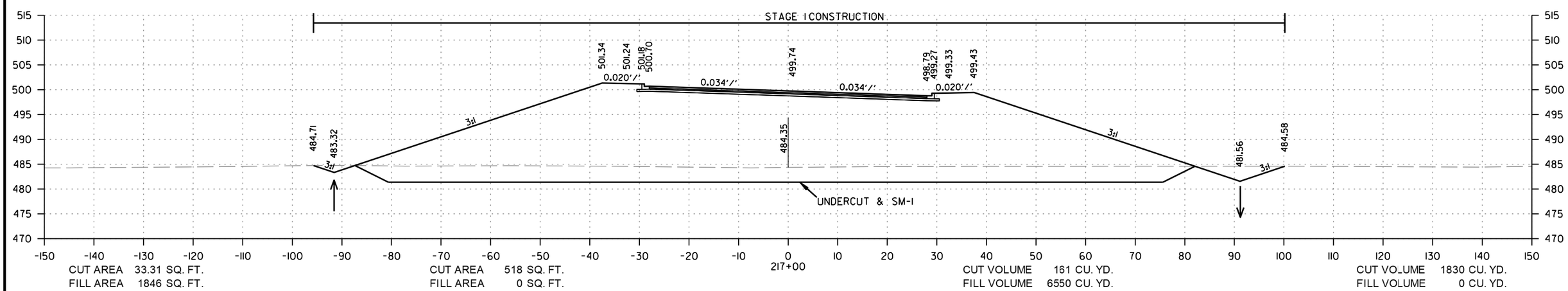

HWY. 10 BYPASS
STA. 217+00 TO STA. 218+00

rb43088 9/21/2023
R040861.DGN

DATE REVISED	DATE REVISED	FED.RD. DIST.NO.	STATE	JOB NO.	SHEET NO.	TOTAL SHEETS
		6	ARK.	040861	233	291
		CROSS SECTIONS				

STAGE 1 | UNDERCUT | STAGE 1 | UNDERCUT

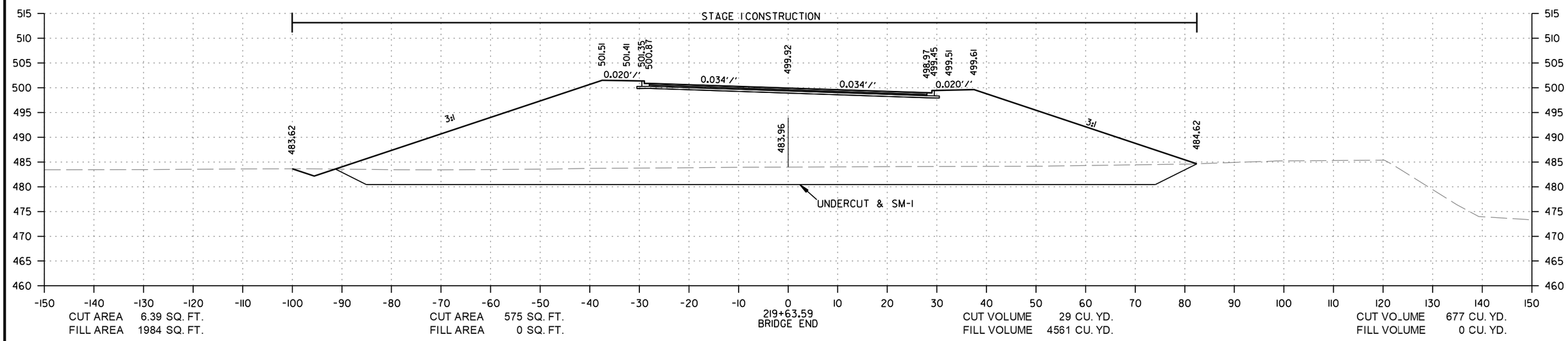

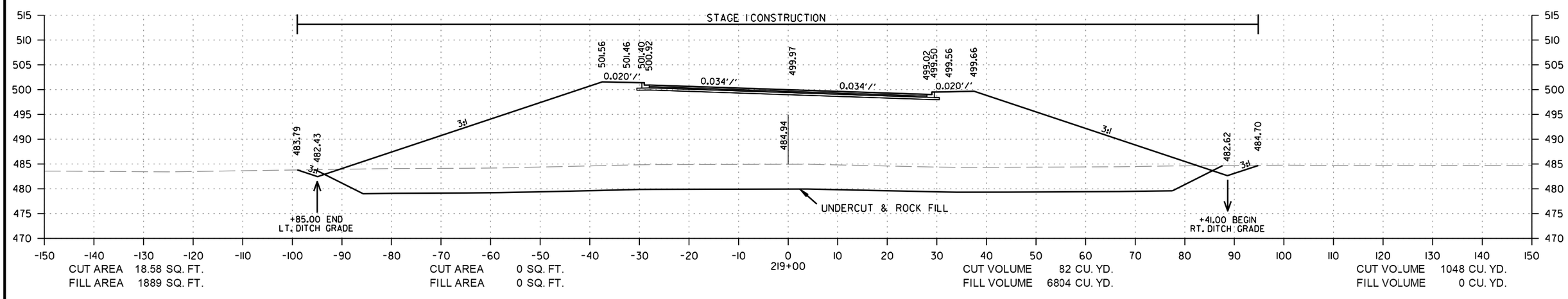

HWY. 10 BYPASS
STA. 219+00 TO STA. 219+63.59

rb43088 9/21/2023
R040861.DGN

DATE REVISED	DATE REVISED	FED.RD. DIST.NO.	STATE	JOB NO.	SHEET NO.	TOTAL SHEETS
		6	ARK.	040861	234	291
		CROSS SECTIONS				

STAGE 1 UNDERCUT STAGE 1 UNDERCUT

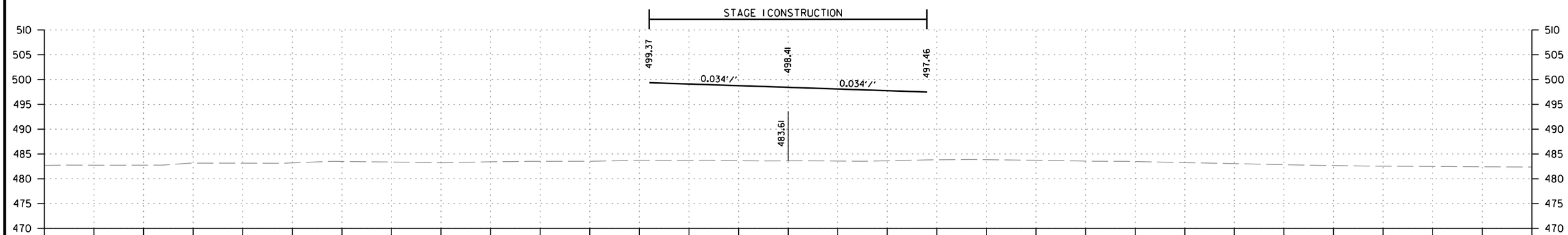

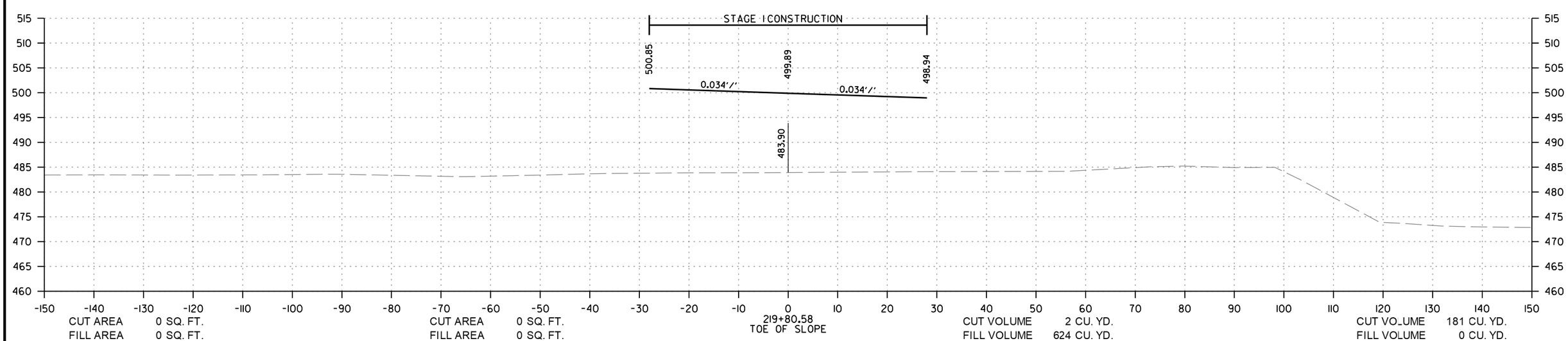

HWY. 10 BYPASS
STA. 219+80.58 TO STA. 223+83.98

rb43088 9/21/2023
R040861.DGN

DATE REVISED	DATE REVISED	FED.RD. DIST.NO.	STATE	JOB NO.	SHEET NO.	TOTAL SHEETS
		6	ARK.	040861	235	291
		CROSS SECTIONS				

STAGE 1 | UNDERCUT | STAGE 1 | UNDERCUT

STAGE I CONSTRUCTION

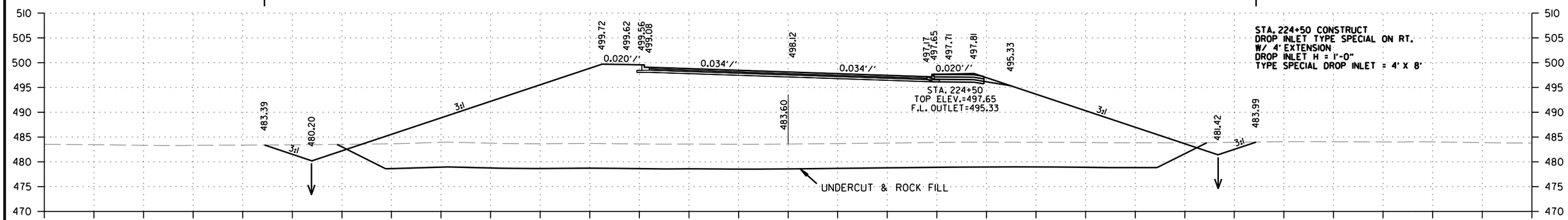

CUT AREA 50.25 SQ. FT.
FILL AREA 1706 SQ. FT.

CUT AREA 0 SQ. FT.
FILL AREA 0 SQ. FT.

CUT VOLUME 102 CU. YD.
FILL VOLUME 3153 CU. YD.

CUT VOLUME 0 CU. YD.
FILL VOLUME 0 CU. YD.

STAGE I CONSTRUCTION

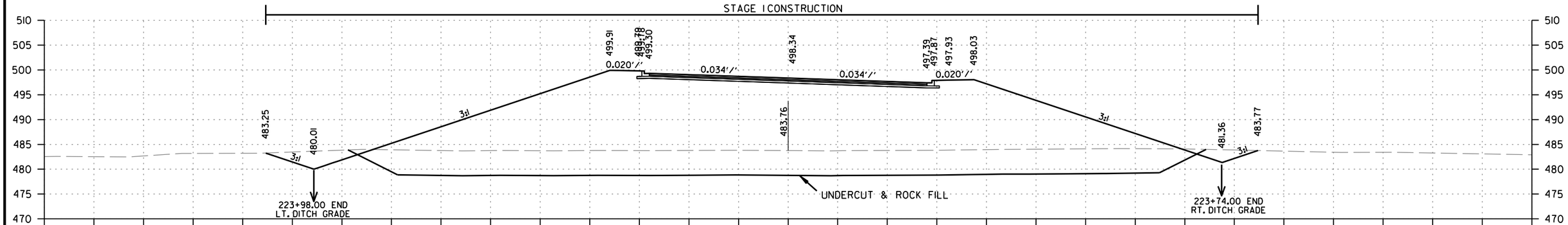

CUT AREA 59.65 SQ. FT.
FILL AREA 1699 SQ. FT.

CUT AREA 0 SQ. FT.
FILL AREA 0 SQ. FT.

CUT VOLUME 3 CU. YD.
FILL VOLUME 128 CU. YD.

CUT VOLUME 0 CU. YD.
FILL VOLUME 0 CU. YD.

STAGE I CONSTRUCTION

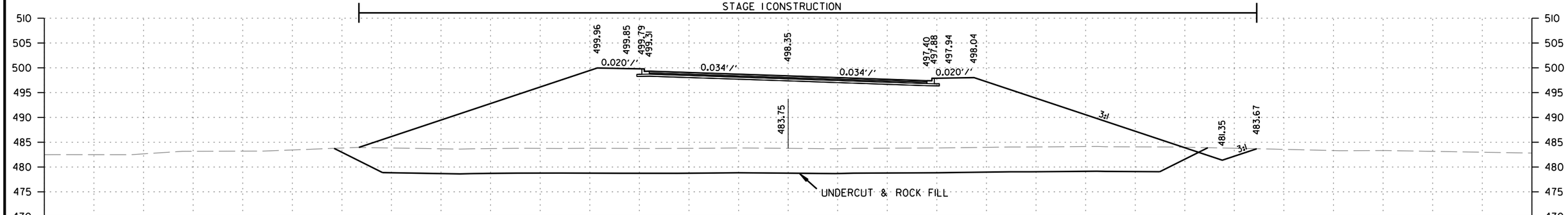

CUT AREA 18.37 SQ. FT.
FILL AREA 1746 SQ. FT.

CUT AREA 0 SQ. FT.
FILL AREA 0 SQ. FT.

CUT VOLUME 5 CU. YD.
FILL VOLUME 453 CU. YD.

CUT VOLUME 0 CU. YD.
FILL VOLUME 0 CU. YD.

HWY. 10 BYPASS
STA. 223+97.99 TO STA. 224+50

rb43088 9/21/2023
R040861.DGN

DATE REVISED	DATE REVISED	FED.RD. DIST.NO.	STATE	JOB NO.	SHEET NO.	TOTAL SHEETS
		6	ARK.	040861	236	291
		CROSS SECTIONS				

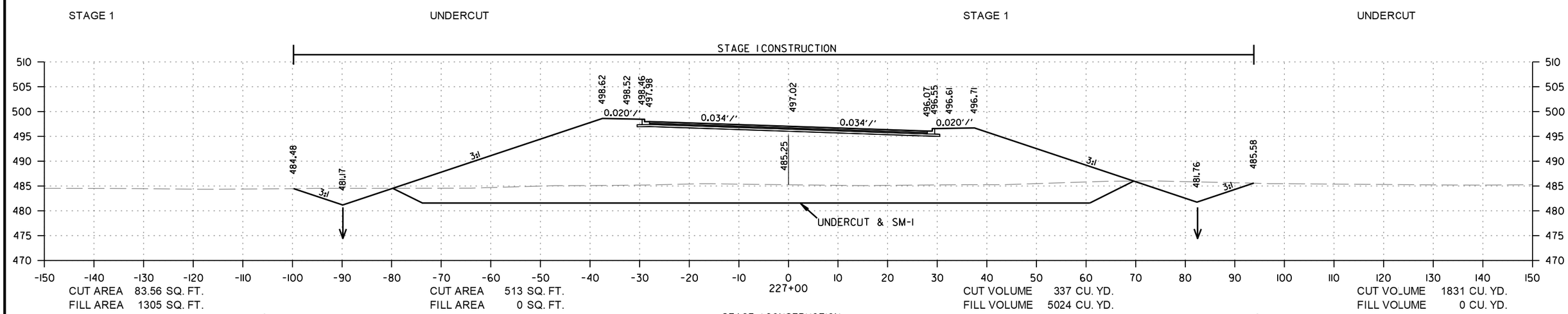

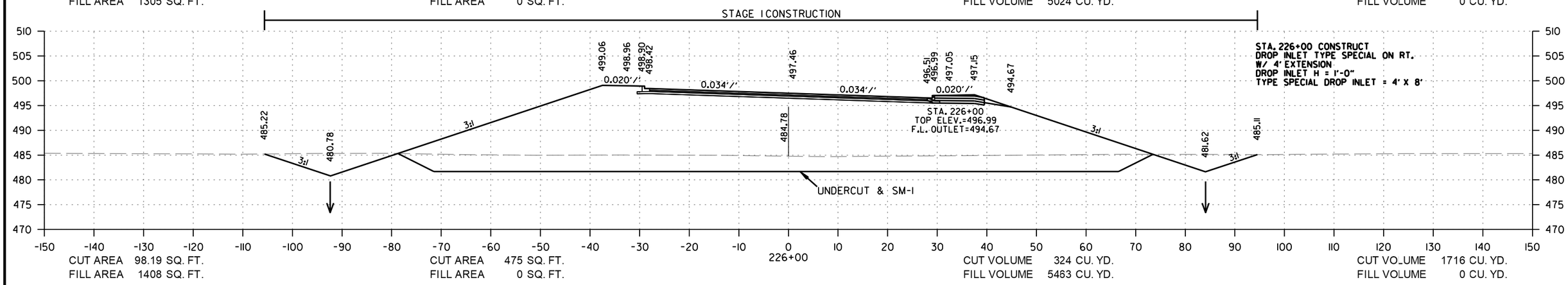

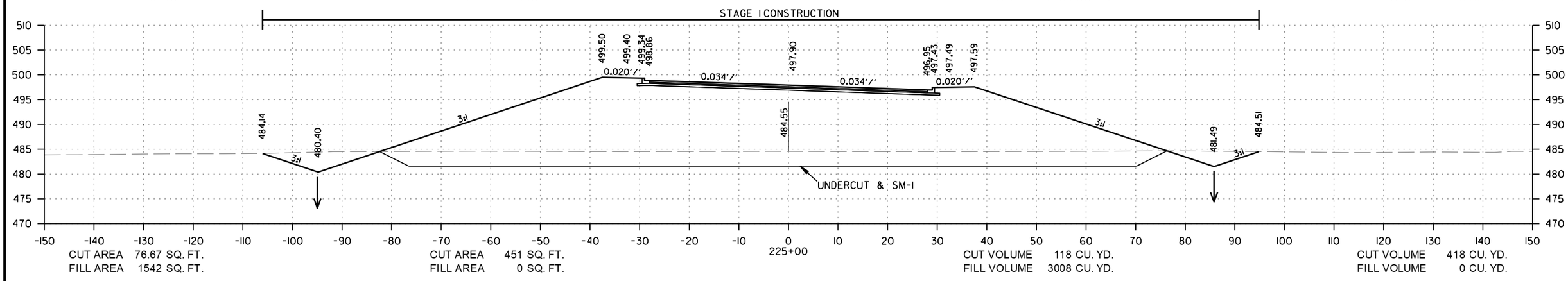

HWY. 10 BYPASS
STA. 225+00 TO STA. 227+00

rb43088 9/21/2023
R040861.DGN

DATE REVISED	DATE REVISED	FED.RD. DIST.NO.	STATE	JOB NO.	SHEET NO.	TOTAL SHEETS
		6	ARK.	040861	237	291
		CROSS SECTIONS				

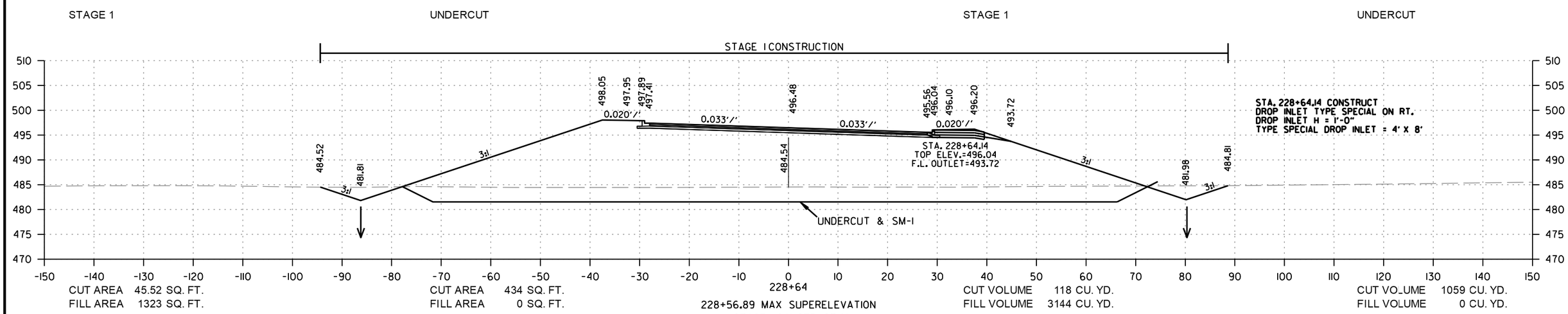

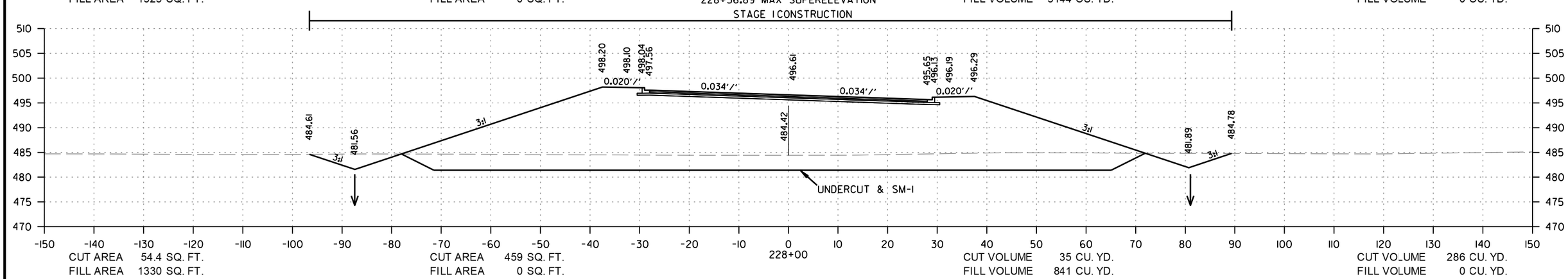

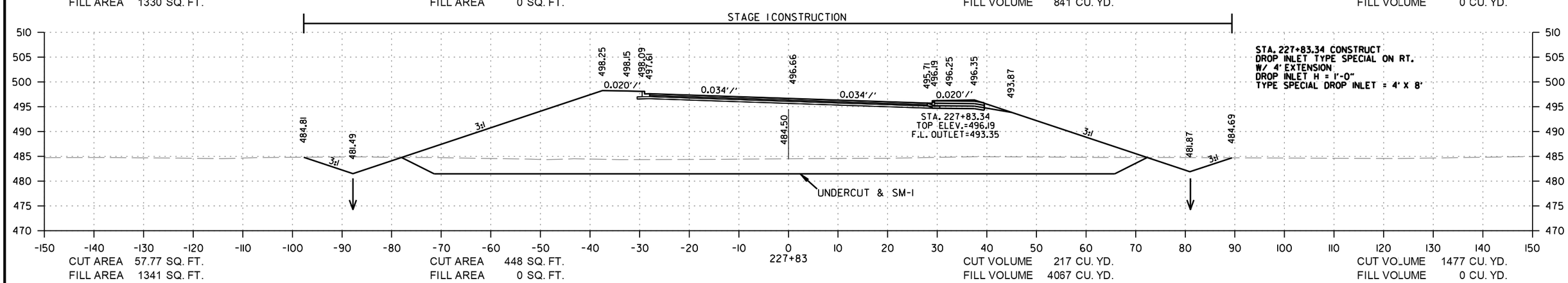

HWY. 10 BYPASS
STA. 227+83 TO STA. 228+64

rb43088 9/21/2023
R040861.DGN

DATE REVISED	DATE REVISED	FED.RD. DIST.NO.	STATE	JOB NO.	SHEET NO.	TOTAL SHEETS
		6	ARK.	040861	238	291
		CROSS SECTIONS				

STAGE 1 | UNDERCUT | STAGE 1 | UNDERCUT

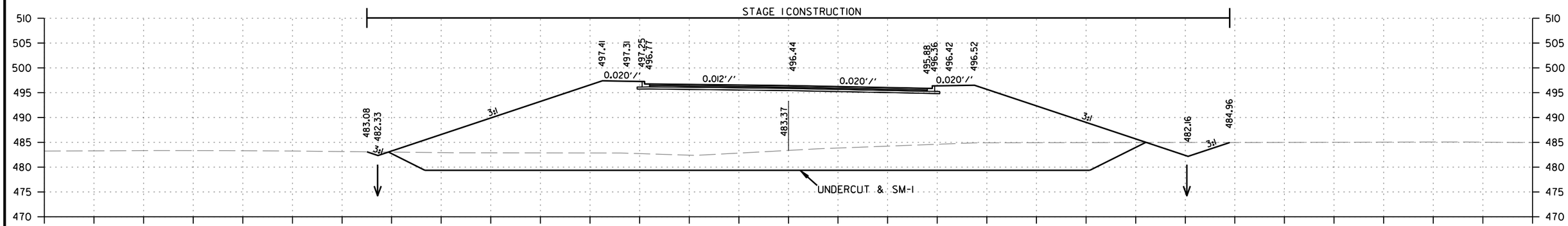

CUT AREA 25.16 SQ. FT. | CUT AREA 608 SQ. FT. | CUT VOLUME 46 CU. YD. | CUT VOLUME 1352 CU. YD.
FILL AREA 1434 SQ. FT. | FILL AREA 0 SQ. FT. | FILL VOLUME 2706 CU. YD. | FILL VOLUME 0 CU. YD.

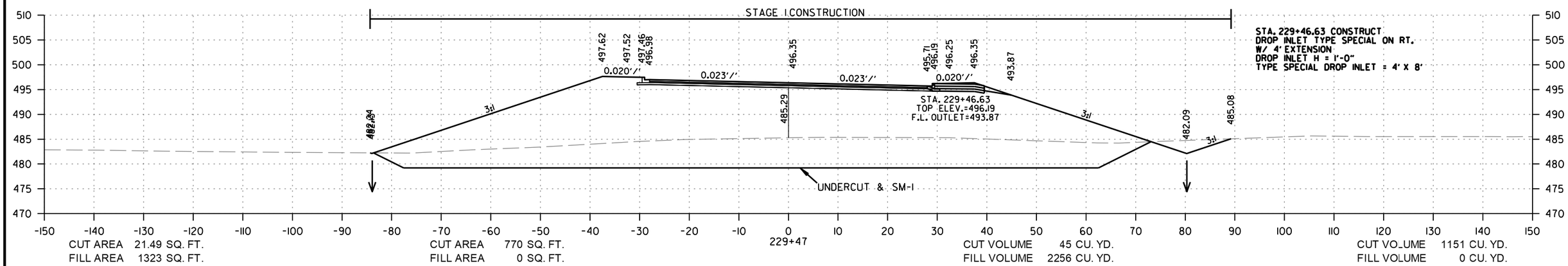

CUT AREA 21.49 SQ. FT. | CUT AREA 770 SQ. FT. | CUT VOLUME 45 CU. YD. | CUT VOLUME 1151 CU. YD.
FILL AREA 1323 SQ. FT. | FILL AREA 0 SQ. FT. | FILL VOLUME 2256 CU. YD. | FILL VOLUME 0 CU. YD.

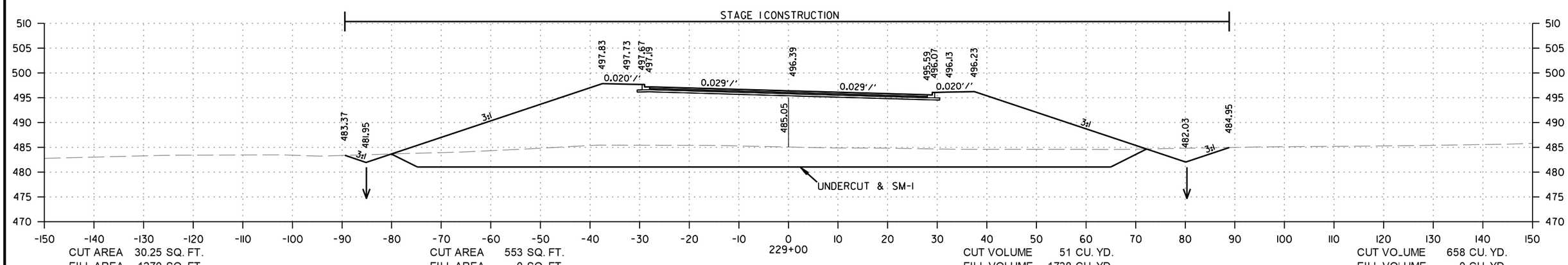

CUT AREA 30.25 SQ. FT. | CUT AREA 553 SQ. FT. | CUT VOLUME 51 CU. YD. | CUT VOLUME 658 CU. YD.
FILL AREA 1270 SQ. FT. | FILL AREA 0 SQ. FT. | FILL VOLUME 1728 CU. YD. | FILL VOLUME 0 CU. YD.

HWY. 10 BYPASS
STA. 229+00 TO STA. 230+00

rb43088 9/21/2023
R040861.DGN

DATE REVISED	DATE REVISED	FED.RD. DIST.NO.	STATE	JOB NO.	SHEET NO.	TOTAL SHEETS
		6	ARK.	040861	239	291
		CROSS SECTIONS				

STAGE 1 | UNDERCUT | STAGE 1 | UNDERCUT

STAGE I CONSTRUCTION

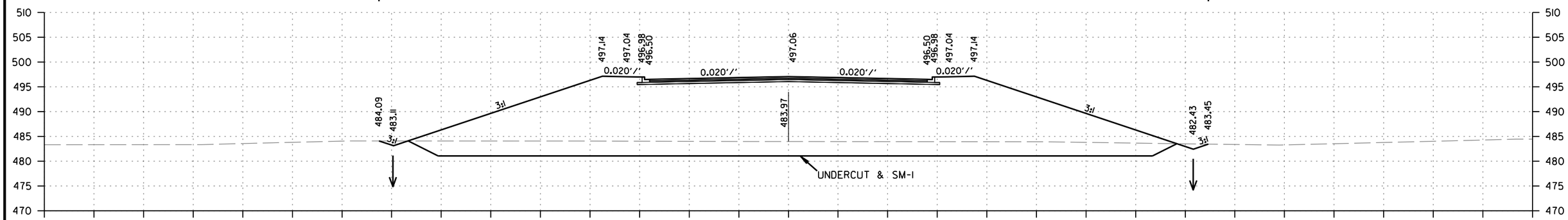

CUT AREA 6.21 SQ. FT.
FILL AREA 1426 SQ. FT.

CUT AREA 432 SQ. FT.
FILL AREA 0 SQ. FT.

232+00
231+26.89 END SUPERELEVATION

CUT VOLUME 18 CU. YD.
FILL VOLUME 3895 CU. YD.

CUT VOLUME 1255 CU. YD.
FILL VOLUME 0 CU. YD.

STAGE I CONSTRUCTION

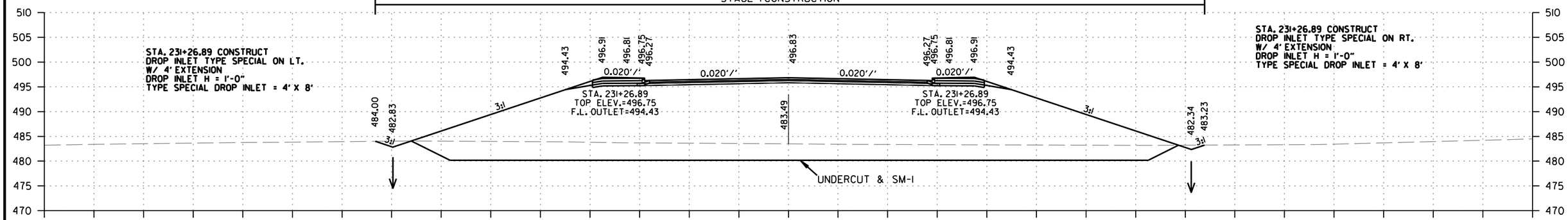

CUT AREA 6.76 SQ. FT.
FILL AREA 1455 SQ. FT.

CUT AREA 496 SQ. FT.
FILL AREA 0 SQ. FT.

231+27

CUT VOLUME 8 CU. YD.
FILL VOLUME 1468 CU. YD.

CUT VOLUME 484 CU. YD.
FILL VOLUME 0 CU. YD.

STAGE I CONSTRUCTION

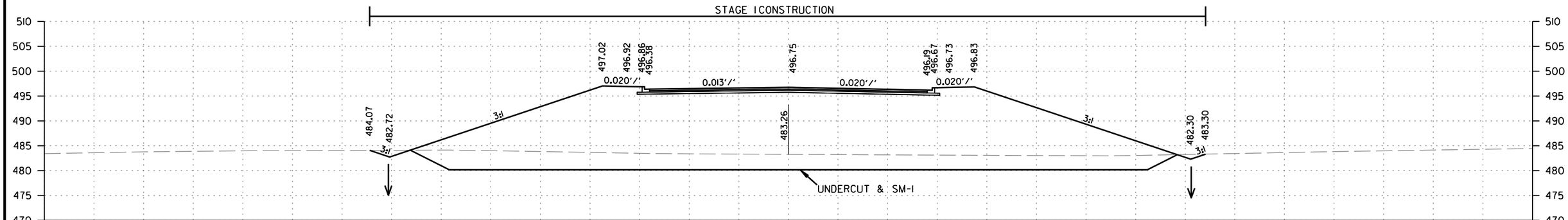

CUT AREA 8.25 SQ. FT.
FILL AREA 1480 SQ. FT.

CUT AREA 473 SQ. FT.
FILL AREA 0 SQ. FT.

231+00

CUT VOLUME 62 CU. YD.
FILL VOLUME 5397 CU. YD.

CUT VOLUME 2000 CU. YD.
FILL VOLUME 0 CU. YD.

HWY. 10 BYPASS
STA. 231+00 TO STA. 232+00

rb43088 9/21/2023
R040861.DGN

DATE REVISED	DATE REVISED	FED.RD. DIST.NO.	STATE	JOB NO.	SHEET NO.	TOTAL SHEETS
		6	ARK.	040861	240	291
		CROSS SECTIONS				

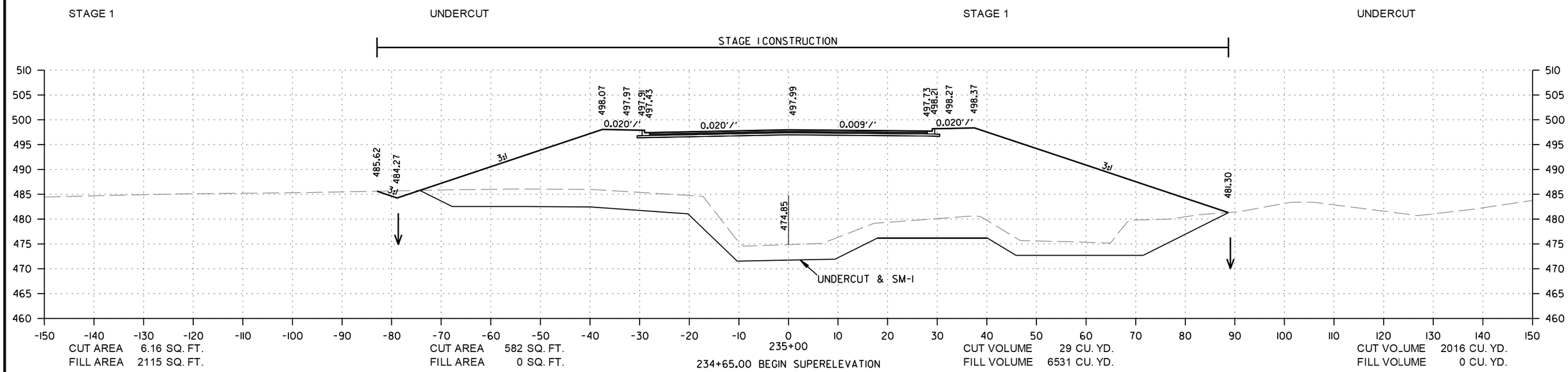

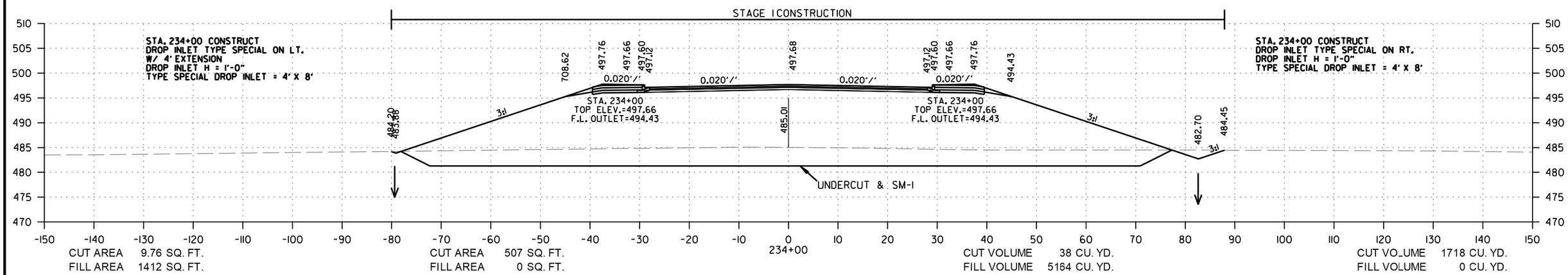

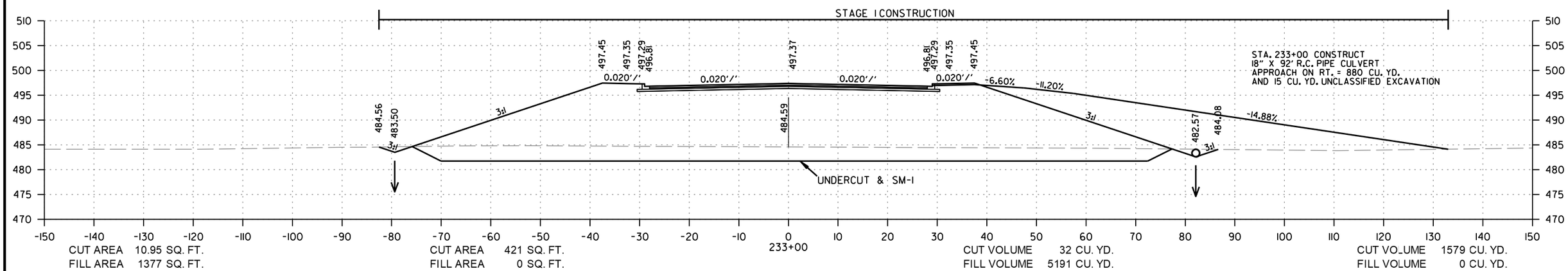

HWY. 10 BYPASS
STA. 233+00 TO STA. 235+00

rb43088 9/21/2023
R040861.DGN

DATE REVISED	DATE REVISED	FED.RD. DIST.NO.	STATE	JOB NO.	SHEET NO.	TOTAL SHEETS
		6	ARK.	040861	241	291
		CROSS SECTIONS				

STAGE 1 UNDERCUT STAGE 1 UNDERCUT

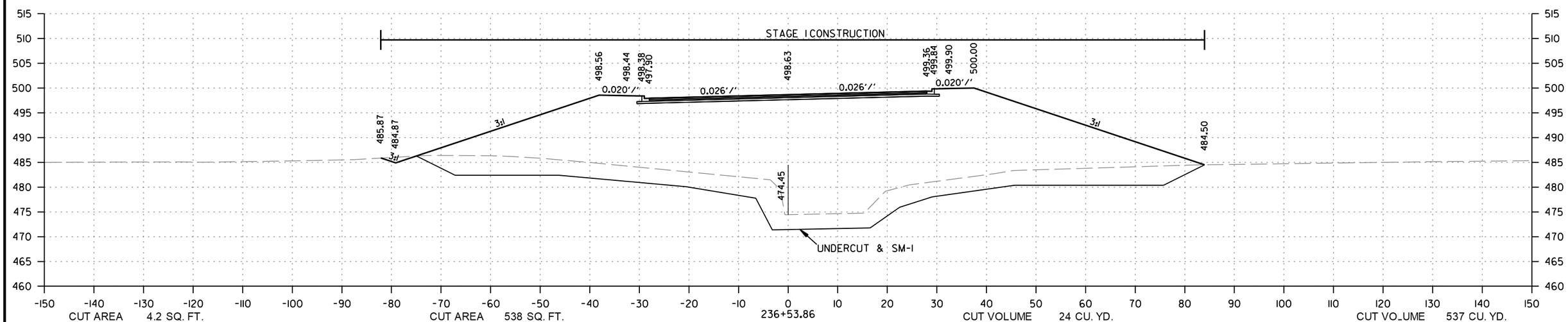

236+40.00 MAX SUPERELEVATION
STAGE 1 CONSTRUCTION

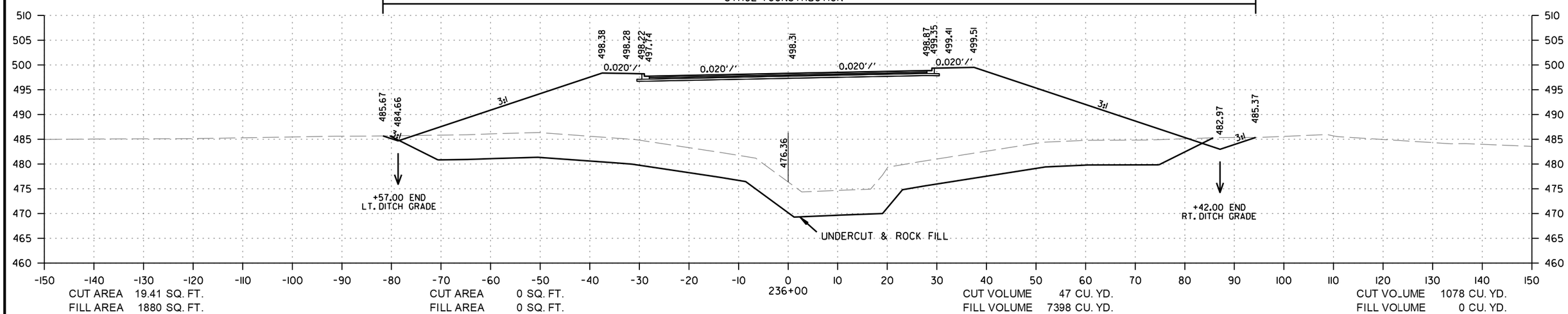

HWY. 10 BYPASS
STA. 236+00 TO STA. 236+53.86

rb43088 9/21/2023
R040861.DGN

DATE REVISED	DATE REVISED	FED.RD. DIST.NO.	STATE	JOB NO.	SHEET NO.	TOTAL SHEETS
		6	ARK.	040861	242	291
		CROSS SECTIONS				

STAGE 1 UNDERCUT STAGE 1 UNDERCUT

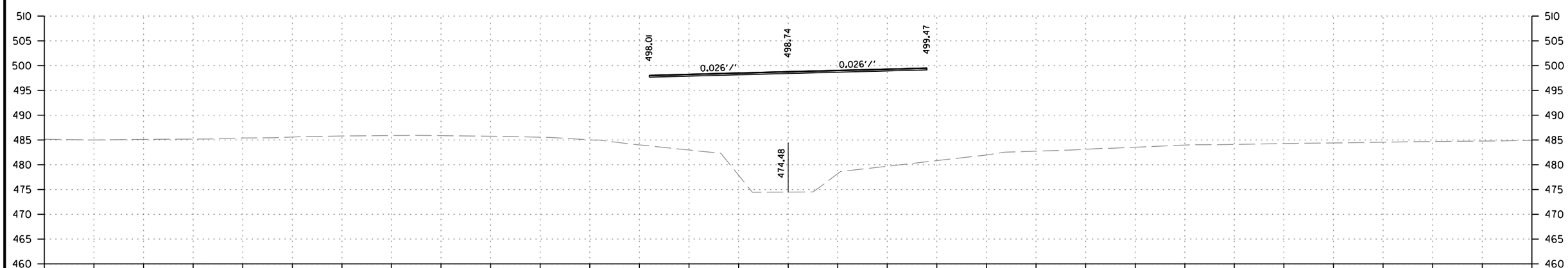

CUT AREA 0 SQ. FT.
FILL AREA 0 SQ. FT.

CUT AREA 0 SQ. FT.
FILL AREA 0 SQ. FT.

CUT VOLUME 3 CU. YD.
FILL VOLUME 1295 CU. YD.

CUT VOLUME 354 CU. YD.
FILL VOLUME 0 CU. YD.

CROSS SECTION STA. 236+89.36 TO STA. 236+89.36

rb43088 9/21/2023
R040861.DGN

DATE REVISED	DATE REVISED	FED.RD. DIST.NO.	STATE	JOB NO.	SHEET NO.	TOTAL SHEETS
		6	ARK.	040861	243	291
		CROSS SECTIONS				

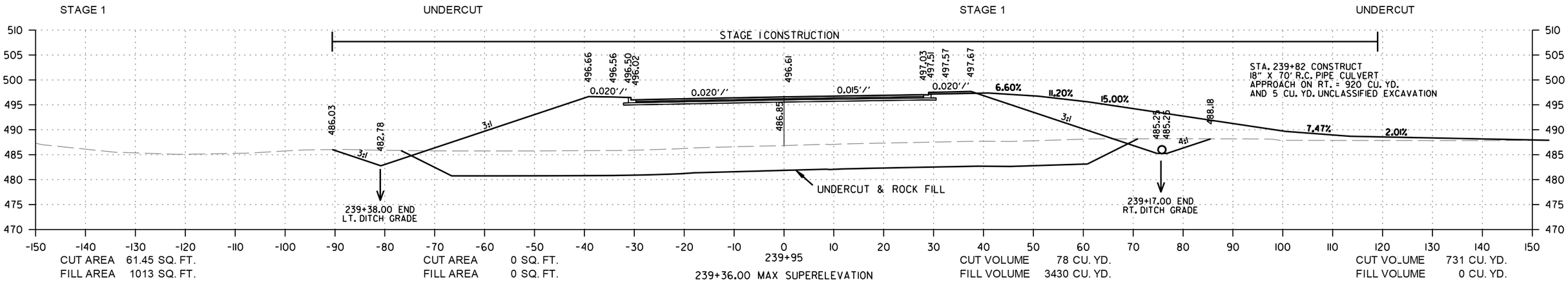

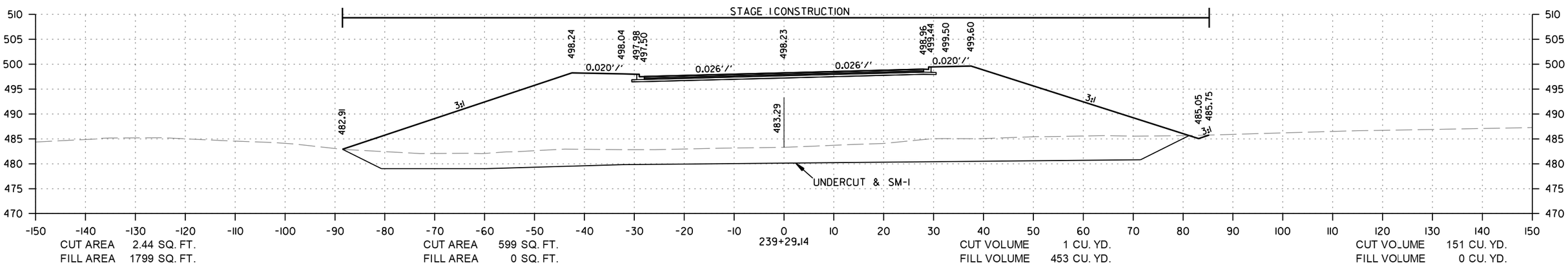

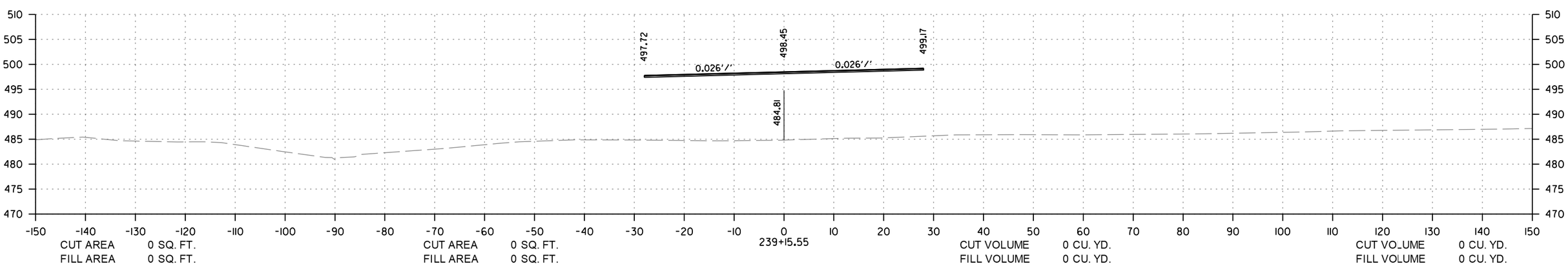

HWY. 10 BYPASS
STA. 239+15.55 TO STA. 239+95

rb43088 9/21/2023
R040861.DGN

DATE REVISED	DATE REVISED	FED.RD. DIST.NO.	STATE	JOB NO.	SHEET NO.	TOTAL SHEETS
		6	ARK.	040861	244	291
		CROSS SECTIONS				

STAGE 1 | UNDERCUT | STAGE 1 | UNDERCUT

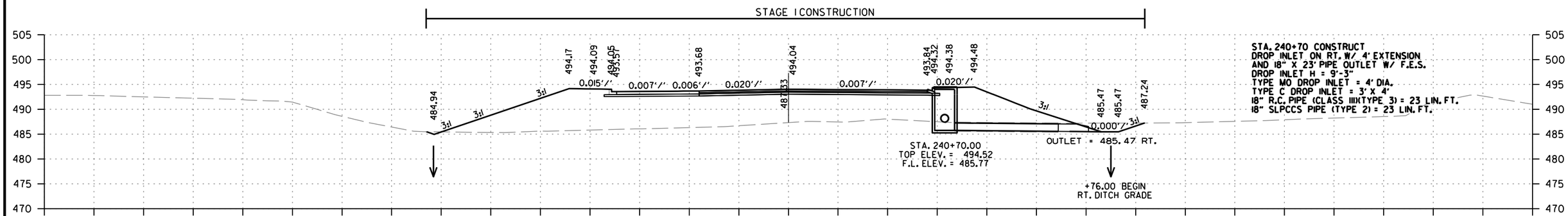

CUT AREA 16.3 SQ. FT. | CUT AREA 0 SQ. FT. | CUT VOLUME 6 CU. YD. | CUT VOLUME 0 CU. YD.
FILL AREA 688 SQ. FT. | FILL AREA 0 SQ. FT. | FILL VOLUME 268 CU. YD. | FILL VOLUME 0 CU. YD.

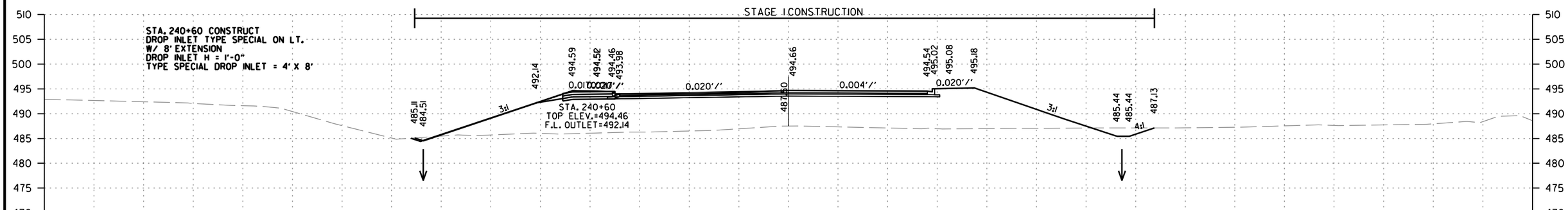

CUT AREA 14.09 SQ. FT. | CUT AREA 0 SQ. FT. | CUT VOLUME 83 CU. YD. | CUT VOLUME 0 CU. YD.
FILL AREA 761 SQ. FT. | FILL AREA 0 SQ. FT. | FILL VOLUME 1893 CU. YD. | FILL VOLUME 0 CU. YD.

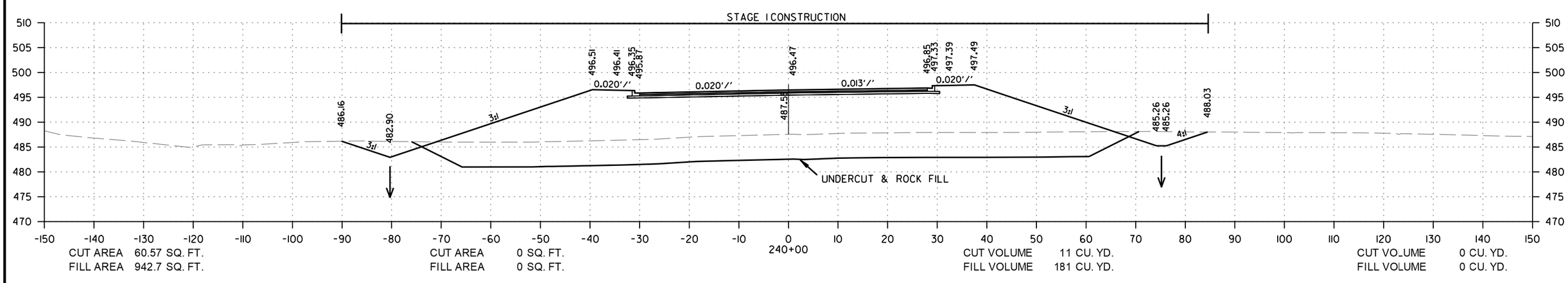

CUT AREA 60.57 SQ. FT. | CUT AREA 0 SQ. FT. | CUT VOLUME 11 CU. YD. | CUT VOLUME 0 CU. YD.
FILL AREA 942.7 SQ. FT. | FILL AREA 0 SQ. FT. | FILL VOLUME 181 CU. YD. | FILL VOLUME 0 CU. YD.

HWY. 10 BYPASS
STA. 240+00 TO STA. 240+70

rb43088 9/21/2023
R040861.DGN

DATE REVISED	DATE REVISED	FED.RD. DIST.NO.	STATE	JOB NO.	SHEET NO.	TOTAL SHEETS
		6	ARK.	040861	245	291
		CROSS SECTIONS				

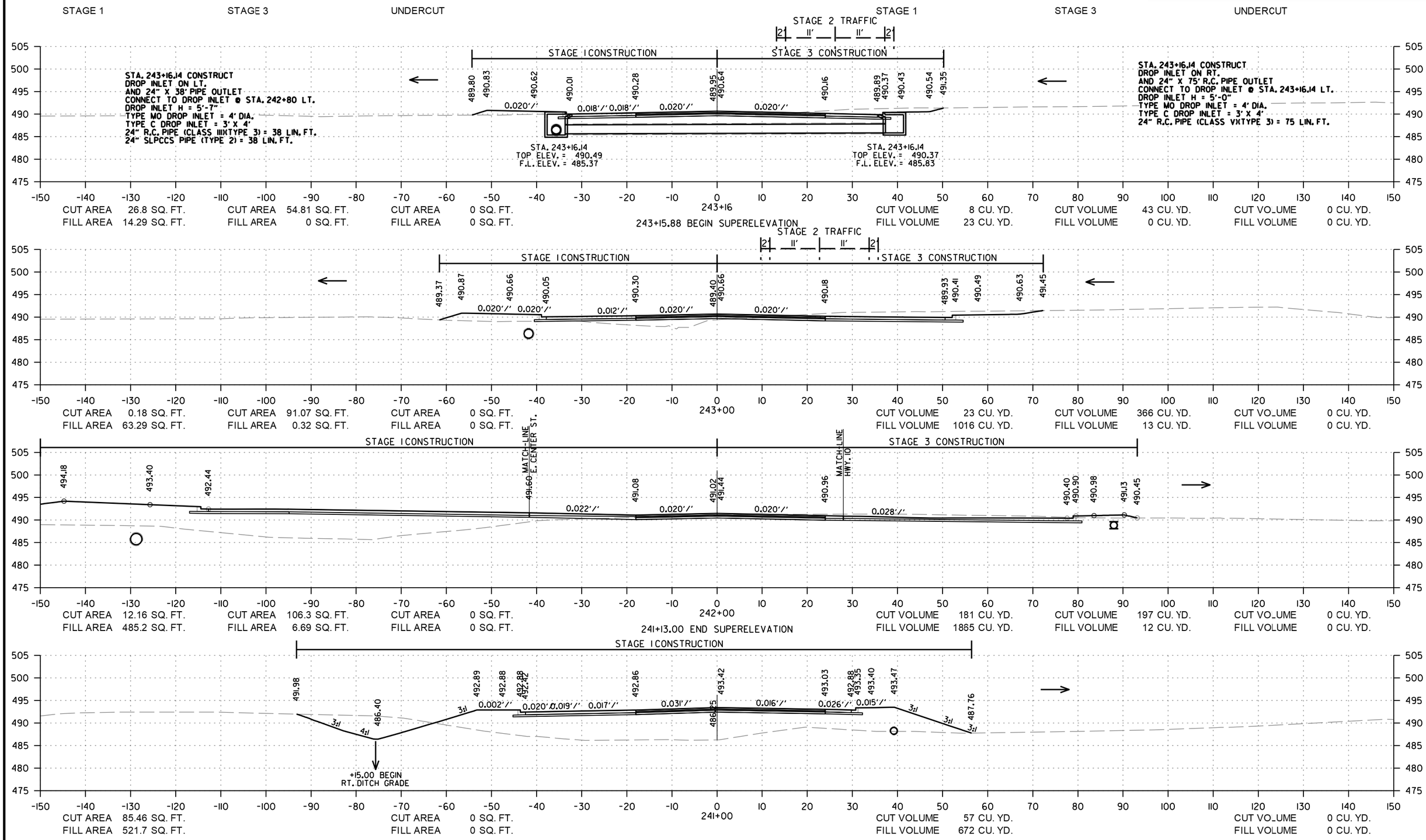

HWY. 10 BYPASS/HWY. 96
STA. 241+00 TO STA. 243+16

rb43088 9/21/2023
R040861.DGN

DATE REVISED	DATE REVISED	FED.RD. DIST.NO.	STATE	JOB NO.	SHEET NO.	TOTAL SHEETS
		6	ARK.	040861	246	291
		CROSS SECTIONS				

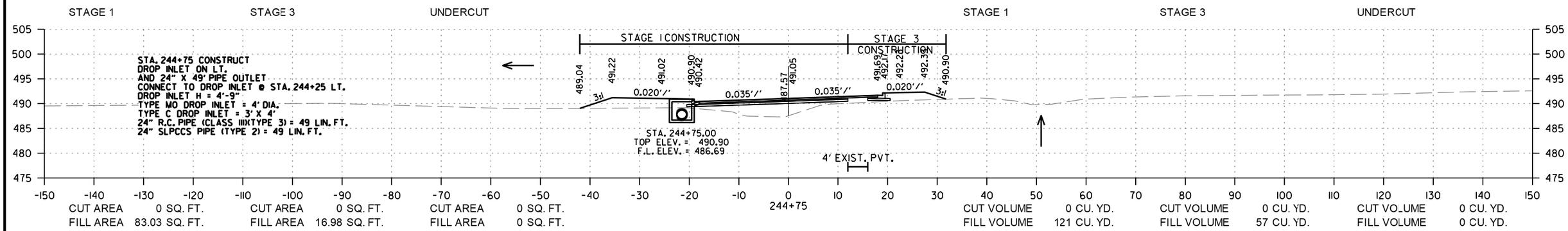

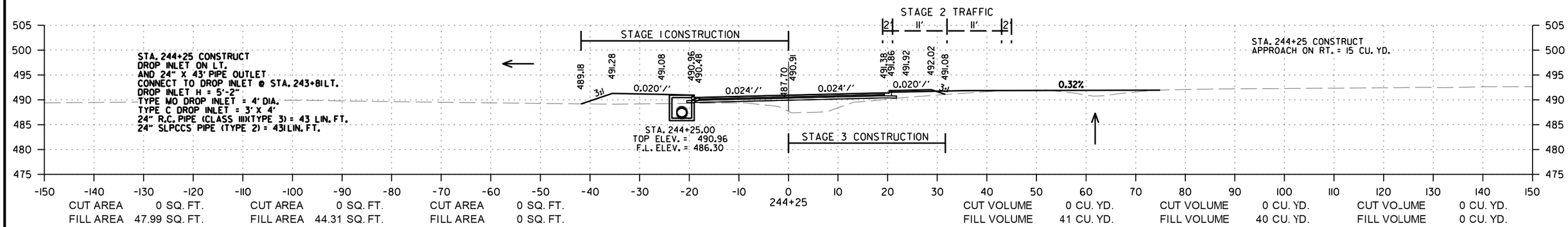

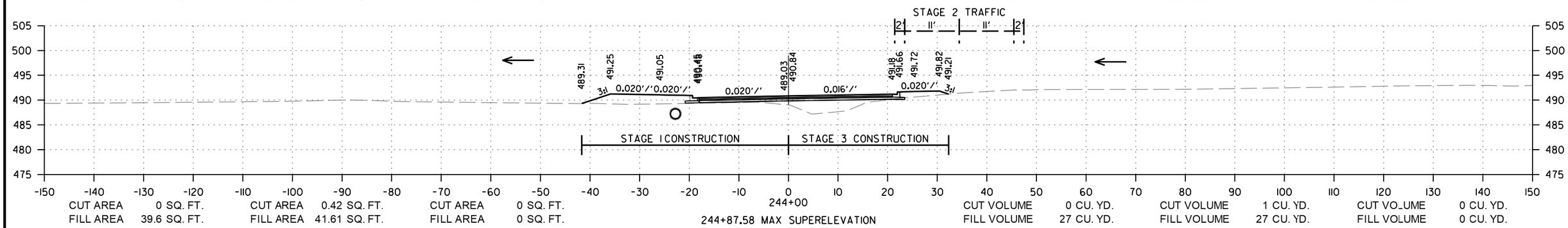

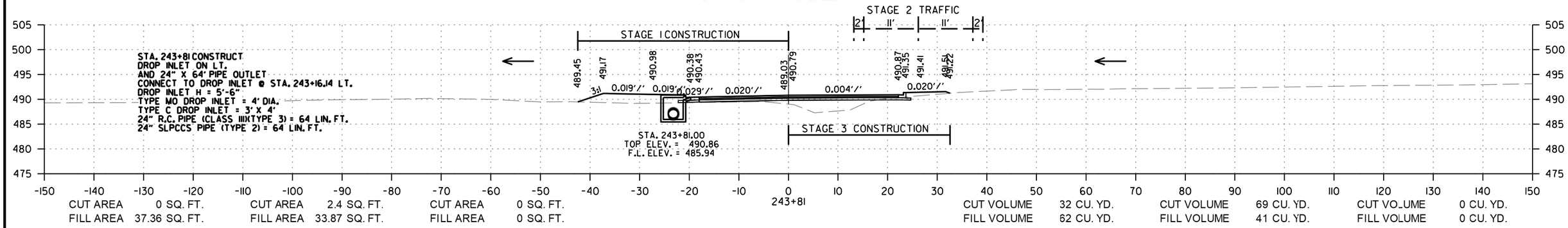

HWY. 96
STA. 243+81 TO STA. 244+75

rb43088 9/21/2023
R040861.DGN

DATE REVISED	DATE REVISED	FED.RD. DIST.NO.	STATE	JOB NO.	SHEET NO.	TOTAL SHEETS
		6	ARK.	040861	247	291
		CROSS SECTIONS				

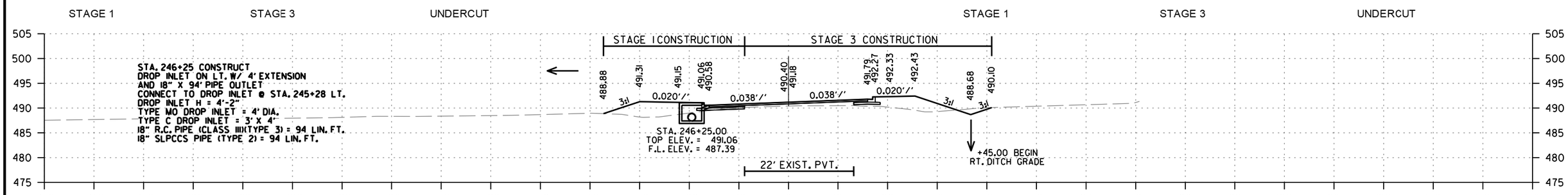

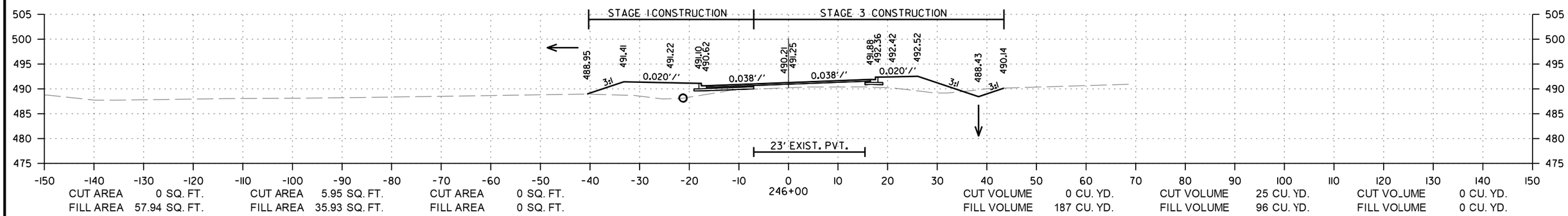

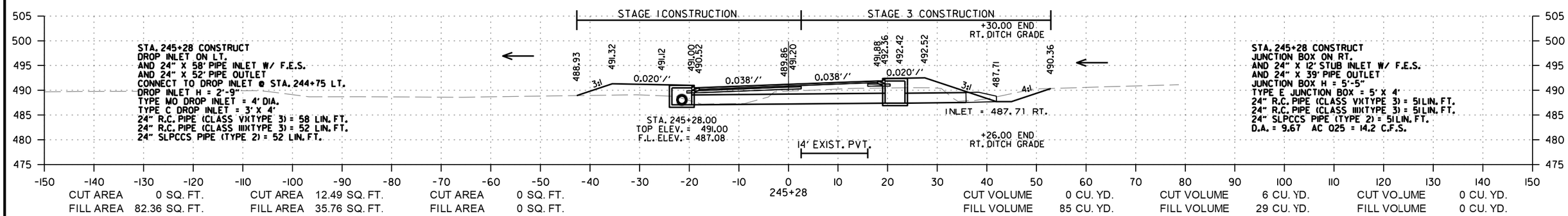

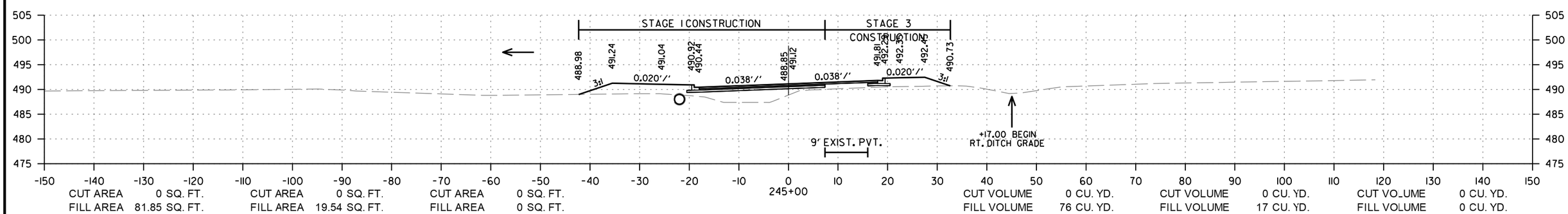

HWY. 96
STA. 245+00 TO STA. 246+25

rb43088 9/21/2023
R040861.DGN

DATE REVISED	DATE REVISED	FED.RD. DIST.NO.	STATE	JOB NO.	SHEET NO.	TOTAL SHEETS
		6	ARK.	040861	248	291
		CROSS SECTIONS				

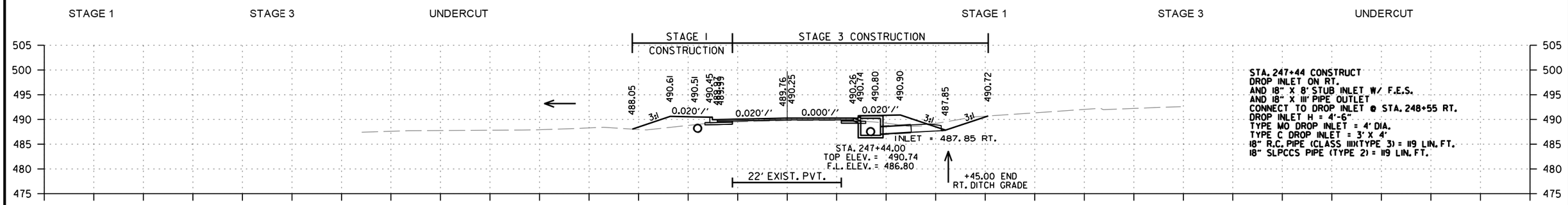

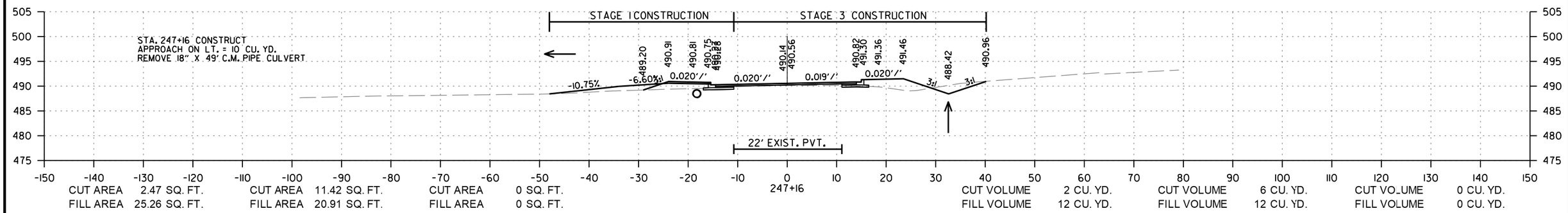

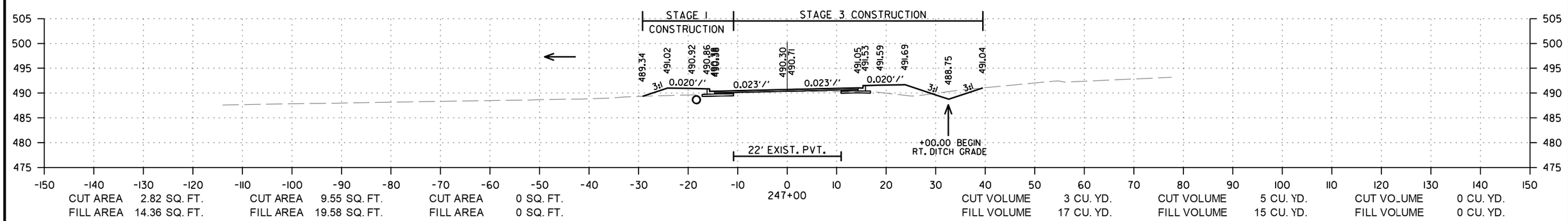

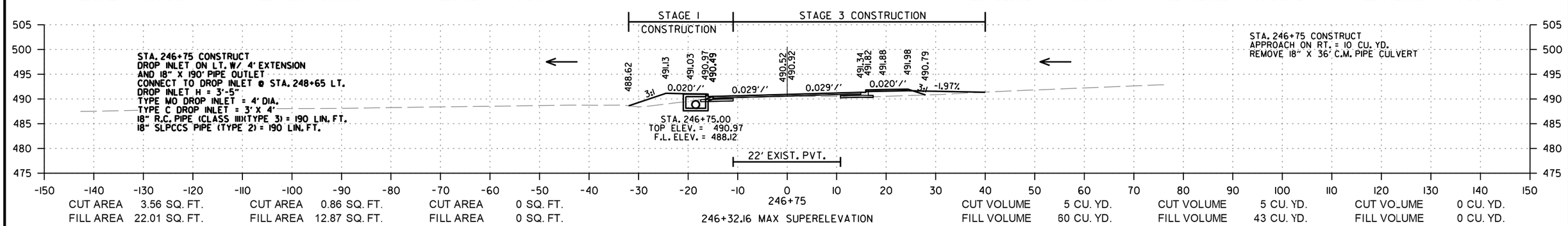

HWY. 96
STA. 246+75 TO STA. 247+44

rb43088 9/21/2023
R040861.DGN

DATE REVISED	DATE REVISED	FED.RD. DIST.NO.	STATE	JOB NO.	SHEET NO.	TOTAL SHEETS
		6	ARK.	040861	249	291
		CROSS SECTIONS				

STAGE 1 | STAGE 3 | UNDERCUT | STAGE 1 | STAGE 3 | UNDERCUT

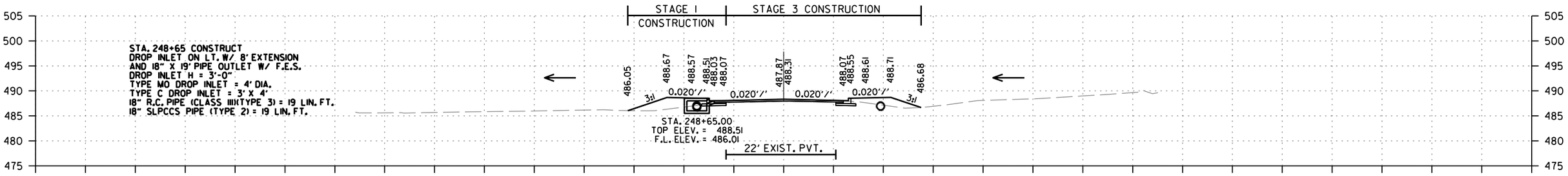

CUT AREA	2.08 SQ. FT.	CUT AREA	3.23 SQ. FT.	CUT AREA	0 SQ. FT.	CUT VOLUME	1 CU. YD.	CUT VOLUME	1 CU. YD.	CUT VOLUME	0 CU. YD.
FILL AREA	23.91 SQ. FT.	FILL AREA	15.3 SQ. FT.	FILL AREA	0 SQ. FT.	FILL VOLUME	9 CU. YD.	FILL VOLUME	6 CU. YD.	FILL VOLUME	0 CU. YD.

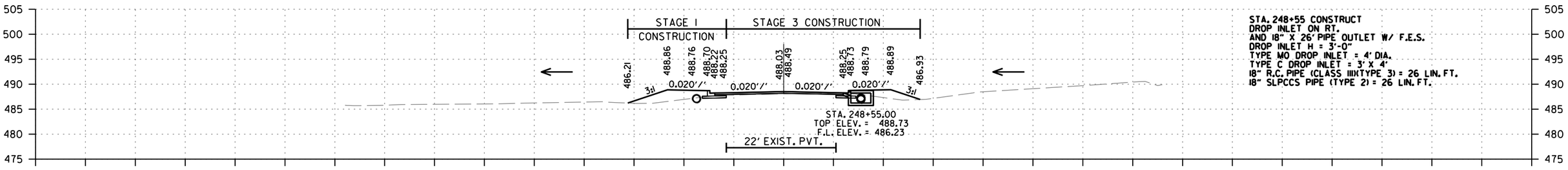

248+03.86 END SUPERELEVATION

CUT AREA	1.91 SQ. FT.	CUT AREA	3.07 SQ. FT.	CUT AREA	0 SQ. FT.	CUT VOLUME	3 CU. YD.	CUT VOLUME	6 CU. YD.	CUT VOLUME	0 CU. YD.
FILL AREA	24.2 SQ. FT.	FILL AREA	15.34 SQ. FT.	FILL AREA	0 SQ. FT.	FILL VOLUME	50 CU. YD.	FILL VOLUME	26 CU. YD.	FILL VOLUME	0 CU. YD.

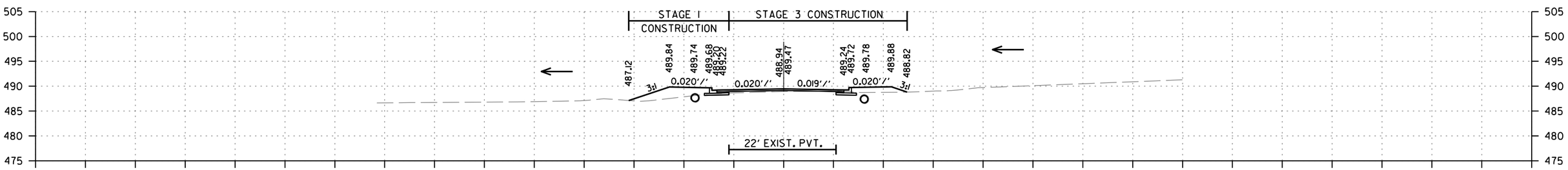

CUT AREA	1.38 SQ. FT.	CUT AREA	2.57 SQ. FT.	CUT AREA	0 SQ. FT.	CUT VOLUME	1 CU. YD.	CUT VOLUME	2 CU. YD.	CUT VOLUME	0 CU. YD.
FILL AREA	24.72 SQ. FT.	FILL AREA	10.11 SQ. FT.	FILL AREA	0 SQ. FT.	FILL VOLUME	16 CU. YD.	FILL VOLUME	6 CU. YD.	FILL VOLUME	0 CU. YD.

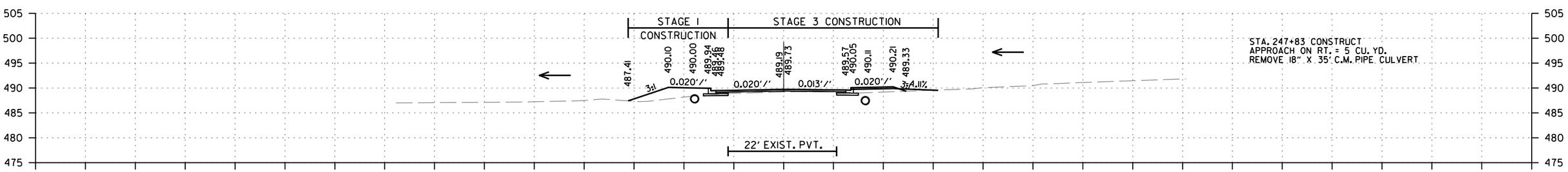

CUT AREA	1.36 SQ. FT.	CUT AREA	2.47 SQ. FT.	CUT AREA	0 SQ. FT.	CUT VOLUME	2 CU. YD.	CUT VOLUME	11 CU. YD.	CUT VOLUME	0 CU. YD.
FILL AREA	24.53 SQ. FT.	FILL AREA	9.49 SQ. FT.	FILL AREA	0 SQ. FT.	FILL VOLUME	34 CU. YD.	FILL VOLUME	20 CU. YD.	FILL VOLUME	0 CU. YD.

HWY. 96
STA. 247+83 TO STA. 248+65

rb43088 9/21/2023
R040861.DGN

DATE REVISED	DATE REVISED	FED.RD. DIST.NO.	STATE	JOB NO.	SHEET NO.	TOTAL SHEETS
		6	ARK.	040861	250	291
		CROSS SECTIONS				

STAGE 1 STAGE 3 UNDERCUT

STAGE 1 STAGE 3 UNDERCUT

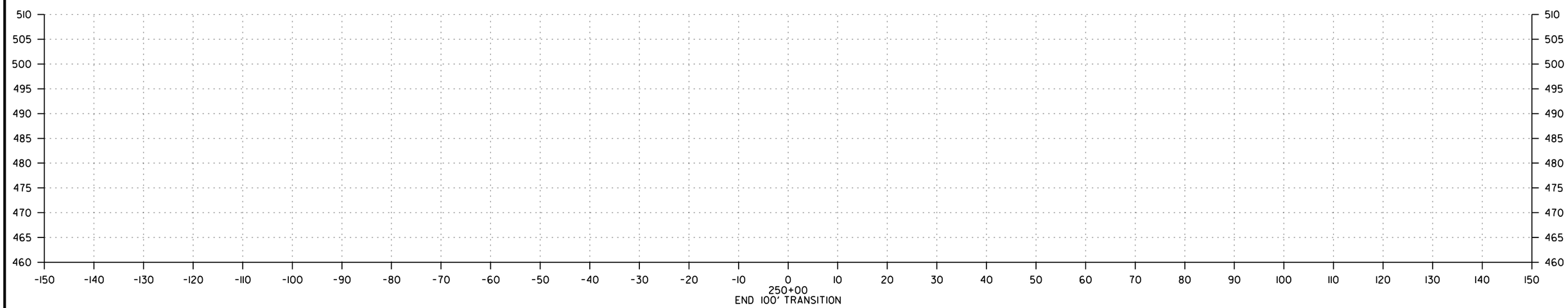

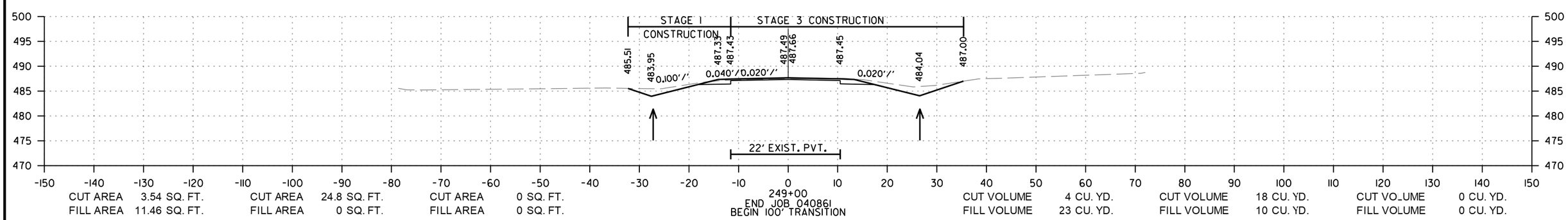

CUT AREA	3.54 SQ. FT.	CUT AREA	24.8 SQ. FT.	CUT AREA	0 SQ. FT.	CUT VOLUME	4 CU. YD.	CUT VOLUME	18 CU. YD.	CUT VOLUME	0 CU. YD.
FILL AREA	11.46 SQ. FT.	FILL AREA	0 SQ. FT.	FILL AREA	0 SQ. FT.	FILL VOLUME	23 CU. YD.	FILL VOLUME	10 CU. YD.	FILL VOLUME	0 CU. YD.

HWY. 96
STA. 249+00 TO STA. 250+00

rb43088 9/21/2023
R040861.DGN

DATE REVISED	DATE REVISED	FED.RD. DIST.NO.	STATE	JOB NO.	SHEET NO.	TOTAL SHEETS
		6	ARK.	040861	251	291
		CROSS SECTIONS				

STAGE 2 | STAGE 3 | UNDERCUT | STAGE 2 | STAGE 3 | UNDERCUT

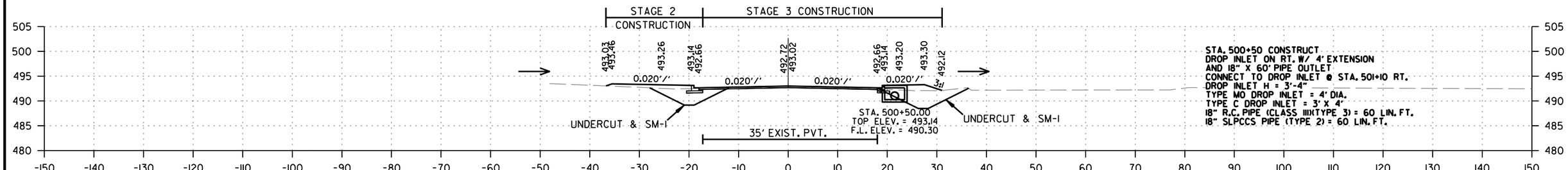

CUT AREA	2.53 SQ. FT.	CUT AREA	6.86 SQ. FT.	CUT AREA	66 SQ. FT.	CUT VOLUME	2 CU. YD.	CUT VOLUME	7 CU. YD.	CUT VOLUME	55 CU. YD.
FILL AREA	10.52 SQ. FT.	FILL AREA	10.47 SQ. FT.	FILL AREA	0 SQ. FT.	FILL VOLUME	8 CU. YD.	FILL VOLUME	10 CU. YD.	FILL VOLUME	0 CU. YD.

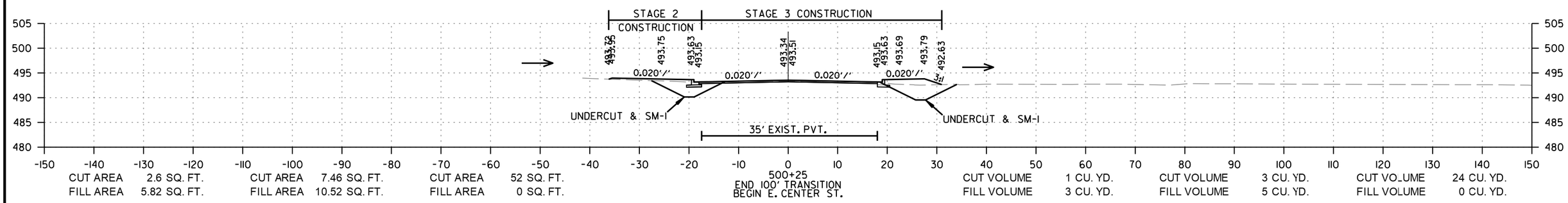

CUT AREA	2.6 SQ. FT.	CUT AREA	7.46 SQ. FT.	CUT AREA	52 SQ. FT.	CUT VOLUME	1 CU. YD.	CUT VOLUME	3 CU. YD.	CUT VOLUME	24 CU. YD.
FILL AREA	5.82 SQ. FT.	FILL AREA	10.52 SQ. FT.	FILL AREA	0 SQ. FT.	FILL VOLUME	3 CU. YD.	FILL VOLUME	5 CU. YD.	FILL VOLUME	0 CU. YD.

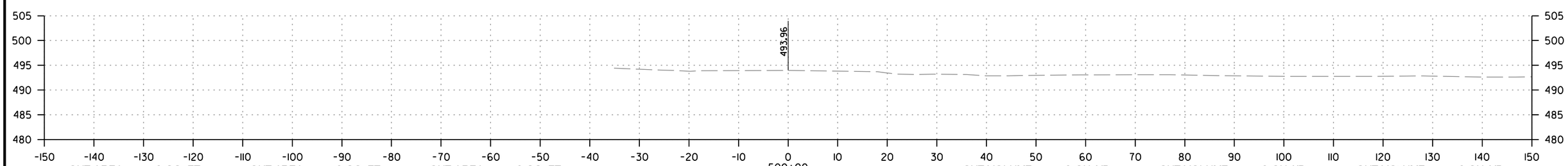

CUT AREA	0 SQ. FT.	CUT AREA	0 SQ. FT.	CUT AREA	0 SQ. FT.	CUT VOLUME	0 CU. YD.	CUT VOLUME	0 CU. YD.	CUT VOLUME	0 CU. YD.
FILL AREA	0 SQ. FT.	FILL AREA	0 SQ. FT.	FILL AREA	0 SQ. FT.	FILL VOLUME	0 CU. YD.	FILL VOLUME	0 CU. YD.	FILL VOLUME	0 CU. YD.

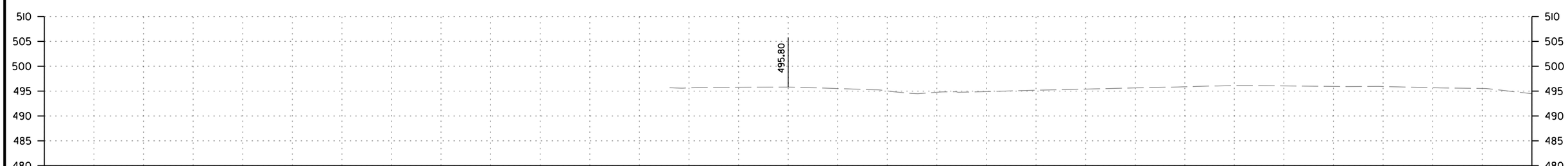

CUT AREA	0 SQ. FT.	CUT AREA	0 SQ. FT.	CUT AREA	0 SQ. FT.	CUT VOLUME	0 CU. YD.	CUT VOLUME	0 CU. YD.	CUT VOLUME	0 CU. YD.
FILL AREA	0 SQ. FT.	FILL AREA	0 SQ. FT.	FILL AREA	0 SQ. FT.	FILL VOLUME	0 CU. YD.	FILL VOLUME	0 CU. YD.	FILL VOLUME	0 CU. YD.

E. CENTER ST.
STA. 499+25 TO STA. 500+50

rb43088 9/22/2023
R040861.DGN

DATE REVISED	DATE REVISED	FED.RD. DIST.NO.	STATE	JOB NO.	SHEET NO.	TOTAL SHEETS
		6	ARK.	040861	252	291
		CROSS SECTIONS				

STAGE 2 | STAGE 3 | UNDERCUT | STAGE 2 | STAGE 3 | UNDERCUT

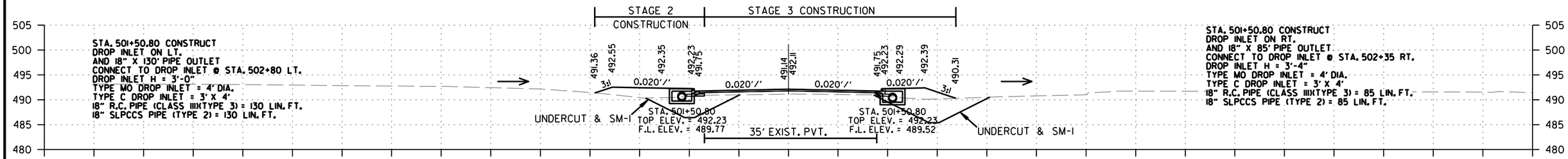

CUT AREA 0.22 SQ. FT. | CUT AREA 0.24 SQ. FT. | CUT AREA 105 SQ. FT. | CUT VOLUME 1 CU. YD. | CUT VOLUME 1 CU. YD. | CUT VO_UME 149 CU. YD.
FILL AREA 31.38 SQ. FT. | FILL AREA 22.14 SQ. FT. | FILL AREA 0 SQ. FT. | FILL VOLUME 39 CU. YD. | FILL VOLUME 28 CU. YD. | FILL VOLUME 0 CU. YD.

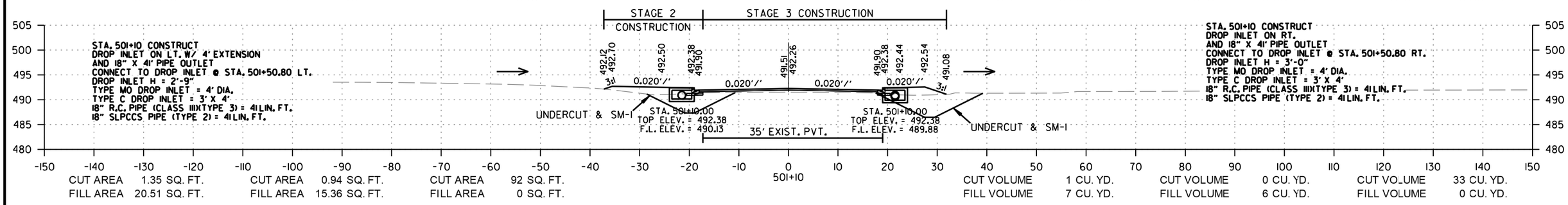

CUT AREA 1.35 SQ. FT. | CUT AREA 0.94 SQ. FT. | CUT AREA 92 SQ. FT. | CUT VOLUME 1 CU. YD. | CUT VOLUME 0 CU. YD. | CUT VO_UME 33 CU. YD.
FILL AREA 20.51 SQ. FT. | FILL AREA 15.36 SQ. FT. | FILL AREA 0 SQ. FT. | FILL VOLUME 7 CU. YD. | FILL VOLUME 6 CU. YD. | FILL VOLUME 0 CU. YD.

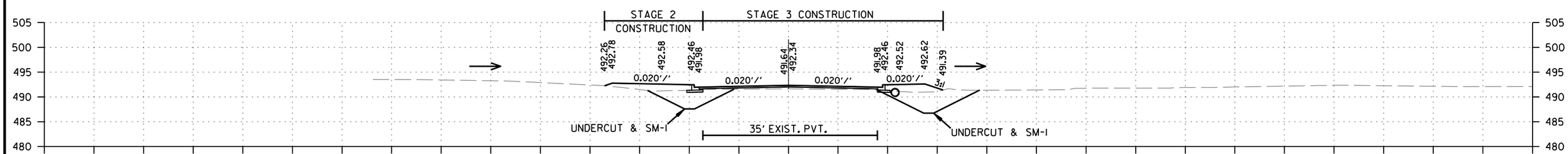

CUT AREA 1.47 SQ. FT. | CUT AREA 1.08 SQ. FT. | CUT AREA 87 SQ. FT. | CUT VOLUME 3 CU. YD. | CUT VOLUME 7 CU. YD. | CUT VO_UME 132 CU. YD.
FILL AREA 18.78 SQ. FT. | FILL AREA 15.02 SQ. FT. | FILL AREA 0 SQ. FT. | FILL VOLUME 24 CU. YD. | FILL VOLUME 22 CU. YD. | FILL VOLUME 0 CU. YD.

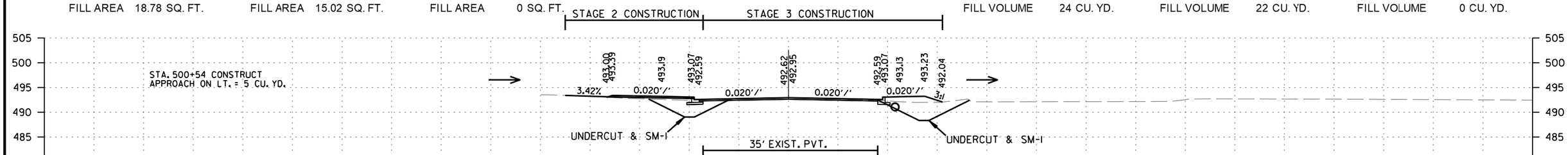

CUT AREA 2.46 SQ. FT. | CUT AREA 6.7 SQ. FT. | CUT AREA 69 SQ. FT. | CUT VOLUME 0 CU. YD. | CUT VOLUME 1 CU. YD. | CUT VO_UME 10 CU. YD.
FILL AREA 9.75 SQ. FT. | FILL AREA 10.75 SQ. FT. | FILL AREA 0 SQ. FT. | FILL VOLUME 2 CU. YD. | FILL VOLUME 2 CU. YD. | FILL VOLUME 0 CU. YD.

E. CENTER ST.
STA. 500+54 TO STA. 501+51

rb43088 9/22/2023
RO40861.DGN

DATE REVISED	DATE REVISED	FED.RD. DIST.NO.	STATE	JOB NO.	SHEET NO.	TOTAL SHEETS
10-30-2023		6	ARK.	040861	253	291
		CROSS SECTIONS				

STAGE 2 | STAGE 3 | UNDERCUT | STAGE 2 | STAGE 3 | UNDERCUT

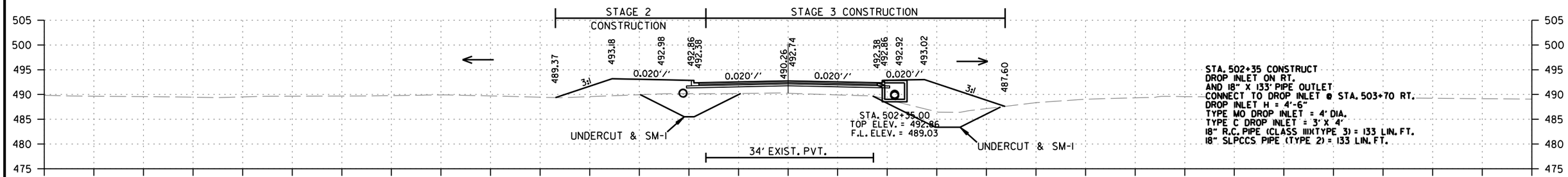

502+35

CUT AREA 0 SQ. FT.	CUT AREA 0 SQ. FT.	CUT AREA 100 SQ. FT.	CUT VOLUME 0 CU. YD.	CUT VOLUME 0 CU. YD.	CUT VOLUME 7 CU. YD.
FILL AREA 70.97 SQ. FT.	FILL AREA 99.24 SQ. FT.	FILL AREA 0 SQ. FT.	FILL VOLUME 5 CU. YD.	FILL VOLUME 7 CU. YD.	FILL VOLUME 0 CU. YD.

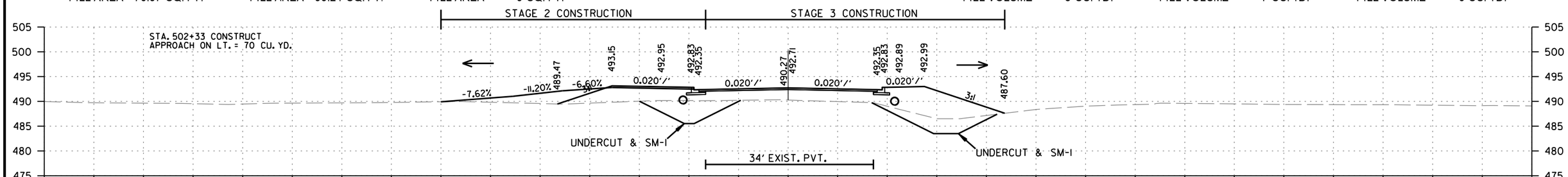

502+33

CUT AREA 0 SQ. FT.	CUT AREA 0 SQ. FT.	CUT AREA 99 SQ. FT.	CUT VOLUME 0 CU. YD.	CUT VOLUME 0 CU. YD.	CUT VOLUME 131 CU. YD.
FILL AREA 68.5 SQ. FT.	FILL AREA 97.71 SQ. FT.	FILL AREA 0 SQ. FT.	FILL VOLUME 72 CU. YD.	FILL VOLUME 81 CU. YD.	FILL VOLUME 0 CU. YD.

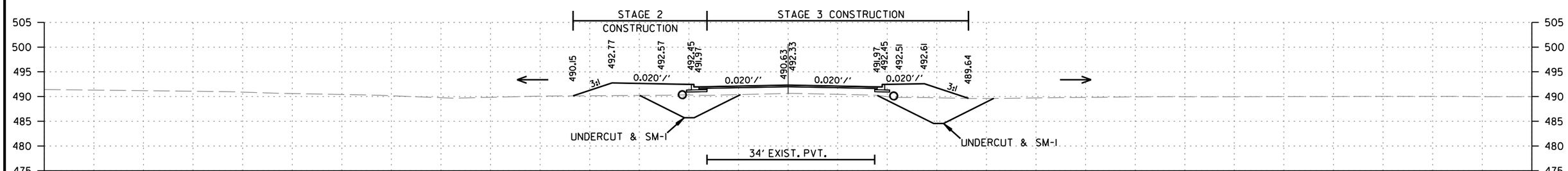

502+00

CUT AREA 0 SQ. FT.	CUT AREA 0 SQ. FT.	CUT AREA 115 SQ. FT.	CUT VOLUME 0 CU. YD.	CUT VOLUME 0 CU. YD.	CUT VOLUME 39 CU. YD.
FILL AREA 49.53 SQ. FT.	FILL AREA 35.22 SQ. FT.	FILL AREA 0 SQ. FT.	FILL VOLUME 16 CU. YD.	FILL VOLUME 11 CU. YD.	FILL VOLUME 0 CU. YD.

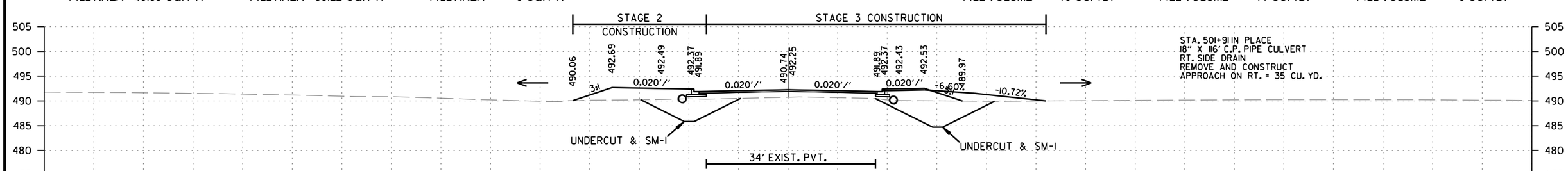

501+91

CUT AREA 0 SQ. FT.	CUT AREA 0 SQ. FT.	CUT AREA 118 SQ. FT.	CUT VOLUME 0 CU. YD.	CUT VOLUME 0 CU. YD.	CUT VOLUME 165 CU. YD.
FILL AREA 47.05 SQ. FT.	FILL AREA 29.23 SQ. FT.	FILL AREA 0 SQ. FT.	FILL VOLUME 58 CU. YD.	FILL VOLUME 38 CU. YD.	FILL VOLUME 0 CU. YD.

E. CENTER ST.
STA. 501+91 TO STA. 502+35

rb43088 10/30/2023
R040861.DGN

DATE REVISED	DATE REVISED	FED.RD. DIST.NO.	STATE	JOB NO.	SHEET NO.	TOTAL SHEETS
10-30-2023		6	ARK.	040861	254	291
		CROSS SECTIONS				

STAGE 2 | STAGE 3 | UNDERCUT | STAGE 2 | STAGE 3 | UNDERCUT

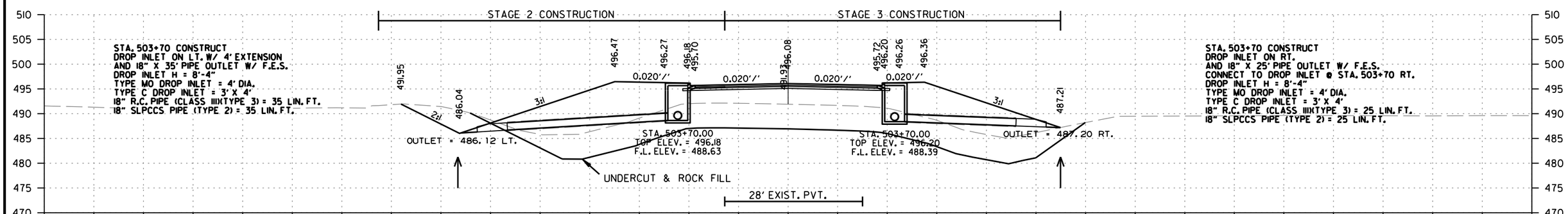

CUT AREA	63.46 SQ. FT.	CUT AREA	0 SQ. FT.	CUT AREA	0 SQ. FT.	CUT VOLUME	90 CU. YD.	CUT VOLUME	0 CU. YD.	CUT VOLUME	0 CU. YD.
FILL AREA	257.6 SQ. FT.	FILL AREA	205.2 SQ. FT.	FILL AREA	0 SQ. FT.	FILL VOLUME	558 CU. YD.	FILL VOLUME	468 CU. YD.	FILL VOLUME	0 CU. YD.

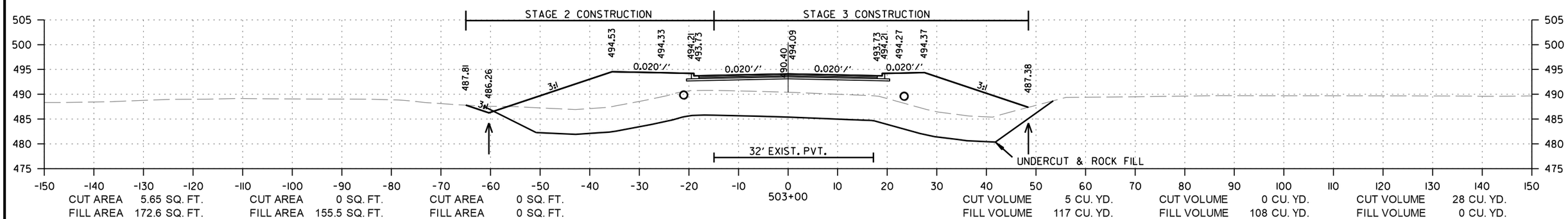

CUT AREA	5.65 SQ. FT.	CUT AREA	0 SQ. FT.	CUT AREA	0 SQ. FT.	CUT VOLUME	5 CU. YD.	CUT VOLUME	0 CU. YD.	CUT VOLUME	28 CU. YD.
FILL AREA	172.6 SQ. FT.	FILL AREA	155.5 SQ. FT.	FILL AREA	0 SQ. FT.	FILL VOLUME	117 CU. YD.	FILL VOLUME	108 CU. YD.	FILL VOLUME	0 CU. YD.

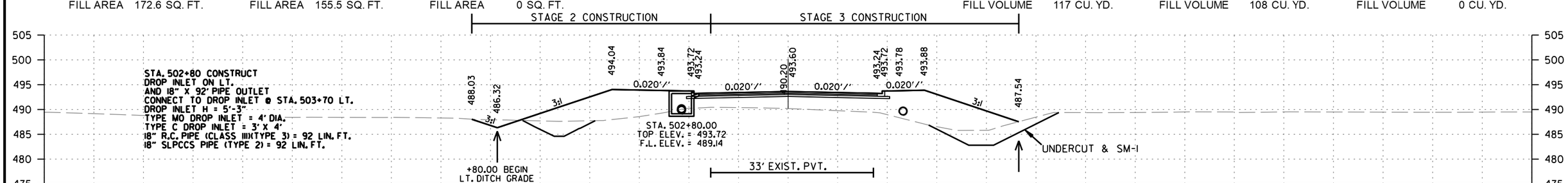

CUT AREA	7.58 SQ. FT.	CUT AREA	0 SQ. FT.	CUT AREA	75 SQ. FT.	CUT VOLUME	6 CU. YD.	CUT VOLUME	0 CU. YD.	CUT VOLUME	146 CU. YD.
FILL AREA	144.4 SQ. FT.	FILL AREA	136 SQ. FT.	FILL AREA	0 SQ. FT.	FILL VOLUME	179 CU. YD.	FILL VOLUME	196 CU. YD.	FILL VOLUME	0 CU. YD.

E. CENTER ST.
STA. 502+80 TO STA. 503+70

rb43088 10/30/2023
R040861.DGN

DATE REVISED	DATE REVISED	FED.RD. DIST.NO.	STATE	JOB NO.	SHEET NO.	TOTAL SHEETS
10-30-2023		6	ARK.	040861	255	291
		CROSS SECTIONS				

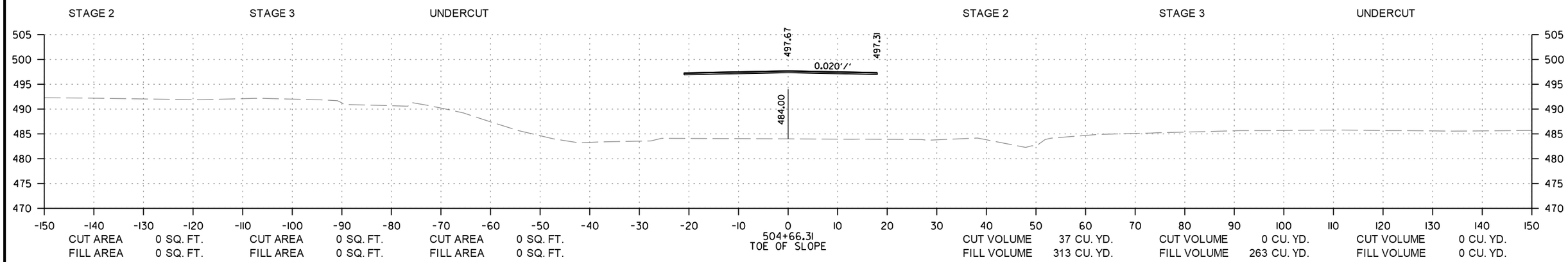

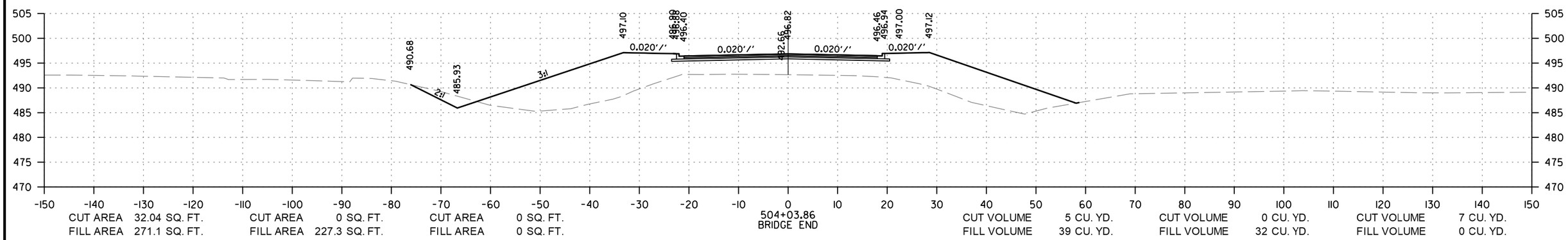

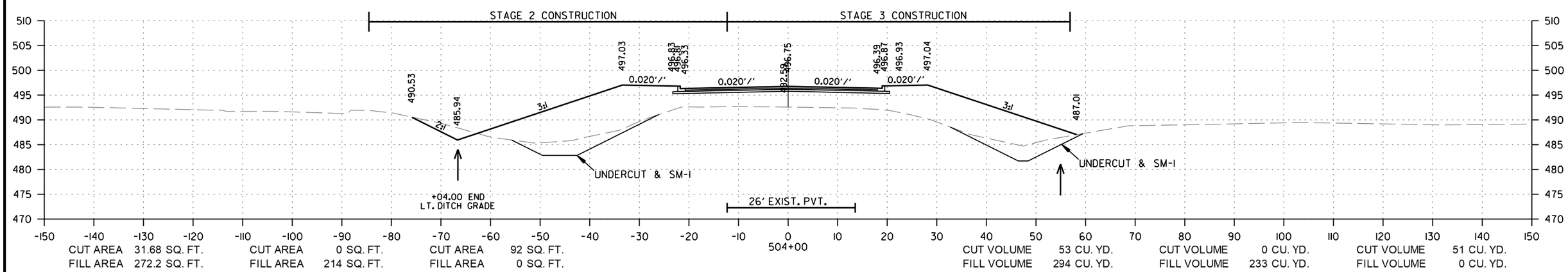

E. CENTER ST.
STA. 504+00 TO STA. 504+66.31

rb43088 10/30/2023
R040861.DGN

DATE REVISED	DATE REVISED	FED.RD. DIST.NO.	STATE	JOB NO.	SHEET NO.	TOTAL SHEETS
10-30-2023		6	ARK.	040861	256	291
		CROSS SECTIONS				

STAGE 2 STAGE 3 UNDERCUT STAGE 2 STAGE 3 UNDERCUT

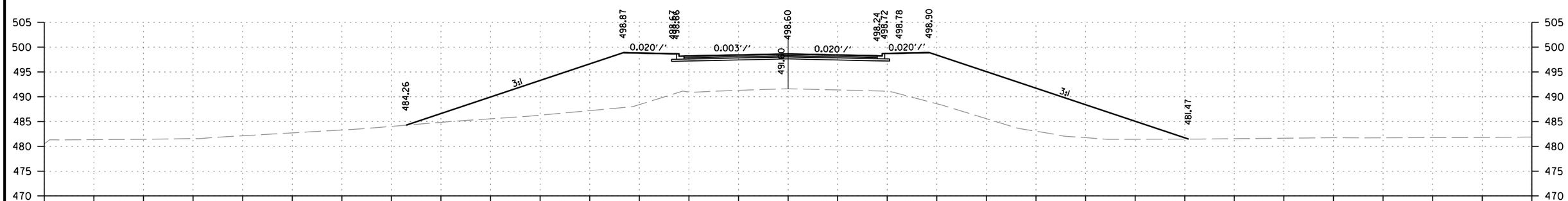

CUT AREA	0 SQ. FT.	CUT AREA	0 SQ. FT.	CUT AREA	0 SQ. FT.	CUT VOLUME	0 CU. YD.	CUT VOLUME	0 CU. YD.	CUT VOLUME	0 CU. YD.
FILL AREA	415.8 SQ. FT.	FILL AREA	476.5 SQ. FT.	FILL AREA	0 SQ. FT.	FILL VOLUME	169 CU. YD.	FILL VOLUME	194 CU. YD.	FILL VOLUME	0 CU. YD.

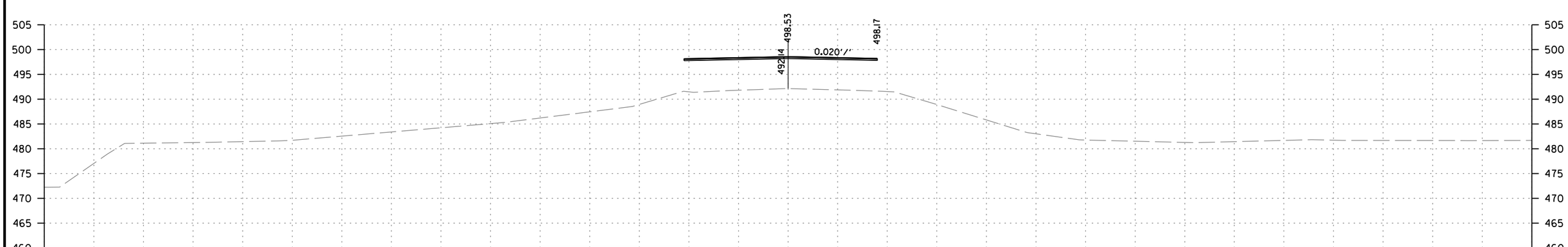

CUT AREA	0 SQ. FT.	CUT AREA	0 SQ. FT.	CUT AREA	0 SQ. FT.	CUT VOLUME	0 CU. YD.	CUT VOLUME	0 CU. YD.	CUT VOLUME	0 CU. YD.
FILL AREA	0 SQ. FT.	FILL AREA	0 SQ. FT.	FILL AREA	0 SQ. FT.	FILL VOLUME	0 CU. YD.	FILL VOLUME	0 CU. YD.	FILL VOLUME	0 CU. YD.

E. CENTER ST.
STA. 507+29.14 TO STA. 507+51.14

rb43088 10/30/2023
R040861.DGN

DATE REVISED	DATE REVISED	FED.RD. DIST.NO.	STATE	JOB NO.	SHEET NO.	TOTAL SHEETS
10-30-2023		6	ARK.	040861	257	291
		CROSS SECTIONS				

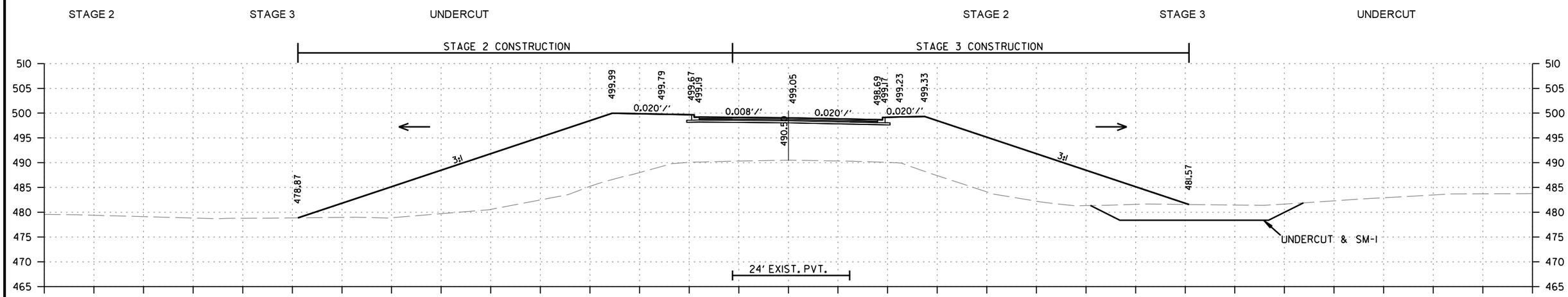

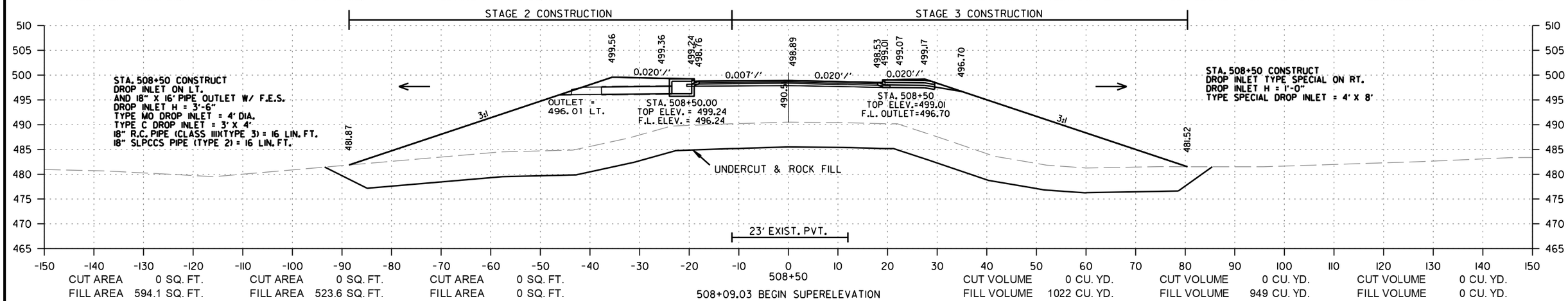

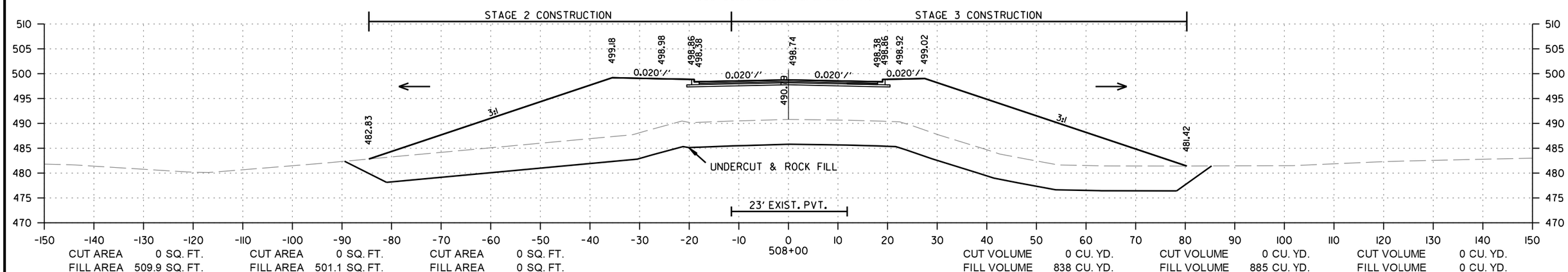

E. CENTER ST.
STA. 508+00 TO STA. 509+00

rb43088 10/30/2023
R040861.DGN

DATE REVISED	DATE REVISED	FED.RD. DIST.NO.	STATE	JOB NO.	SHEET NO.	TOTAL SHEETS
10-30-2023		6	ARK.	040861	258	291
		CROSS SECTIONS				

STAGE 2 STAGE 3 UNDERCUT STAGE 2 STAGE 3 UNDERCUT

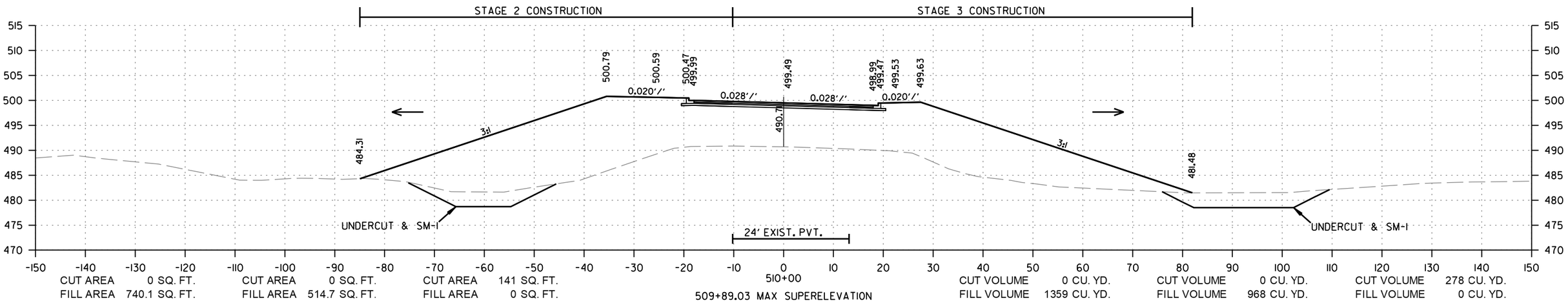

CUT AREA	0 SQ. FT.	CUT AREA	0 SQ. FT.	CUT AREA	141 SQ. FT.	CUT VOLUME	0 CU. YD.	CUT VOLUME	0 CU. YD.	CUT VOLUME	278 CU. YD.
FILL AREA	740.1 SQ. FT.	FILL AREA	514.7 SQ. FT.	FILL AREA	0 SQ. FT.	FILL VOLUME	1359 CU. YD.	FILL VOLUME	968 CU. YD.	FILL VOLUME	0 CU. YD.

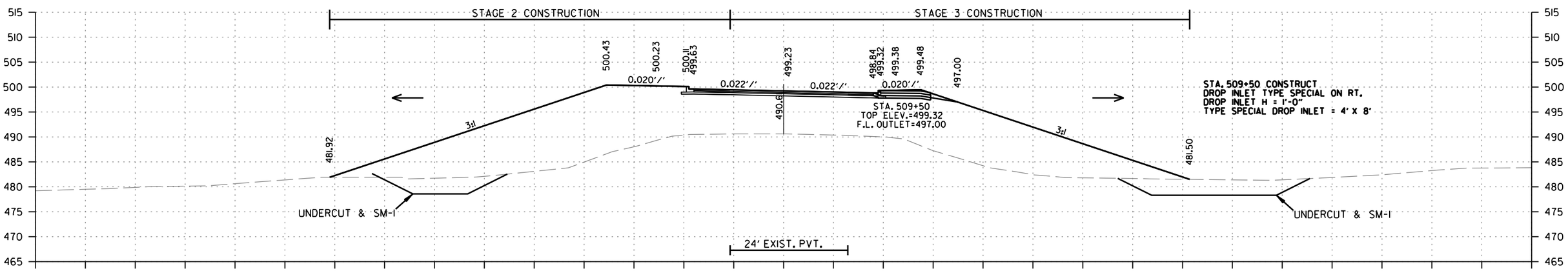

CUT AREA	0 SQ. FT.	CUT AREA	0 SQ. FT.	CUT AREA	159 SQ. FT.	CUT VOLUME	0 CU. YD.	CUT VOLUME	0 CU. YD.	CUT VOLUME	252 CU. YD.
FILL AREA	728 SQ. FT.	FILL AREA	531.1 SQ. FT.	FILL AREA	0 SQ. FT.	FILL VOLUME	1406 CU. YD.	FILL VOLUME	984 CU. YD.	FILL VOLUME	0 CU. YD.

E. CENTER ST.
STA. 509+50 TO STA. 510+00

rb43088 10/30/2023
R040861.DGN

DATE REVISED	DATE REVISED	FED.RD. DIST.NO.	STATE	JOB NO.	SHEET NO.	TOTAL SHEETS
10-30-2023		6	ARK.	040861	259	291
		CROSS SECTIONS				

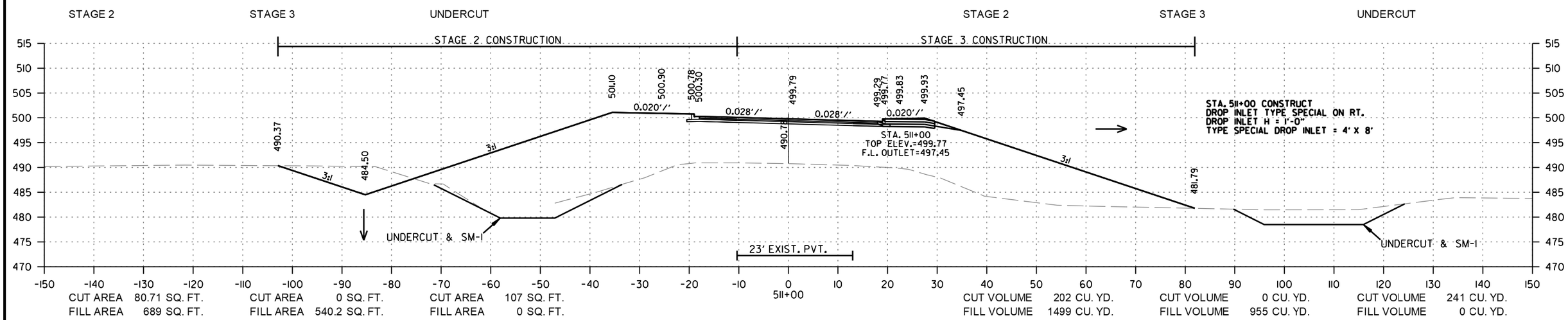

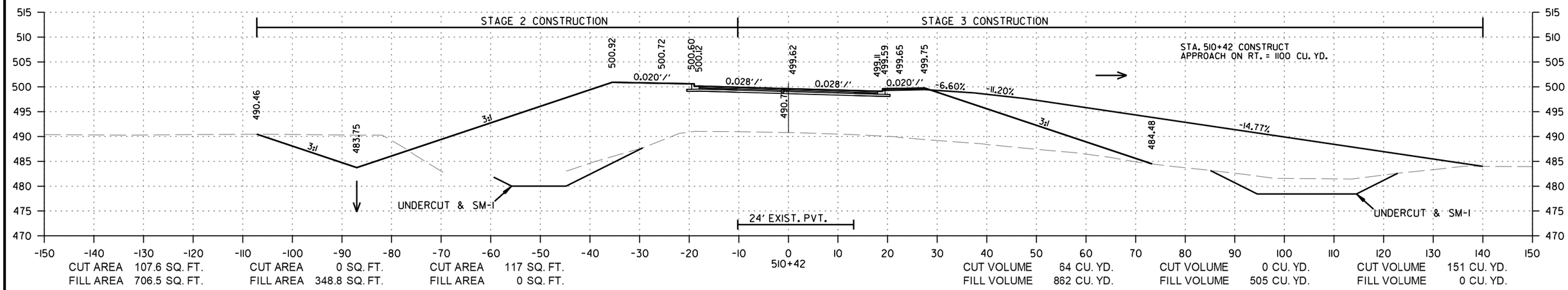

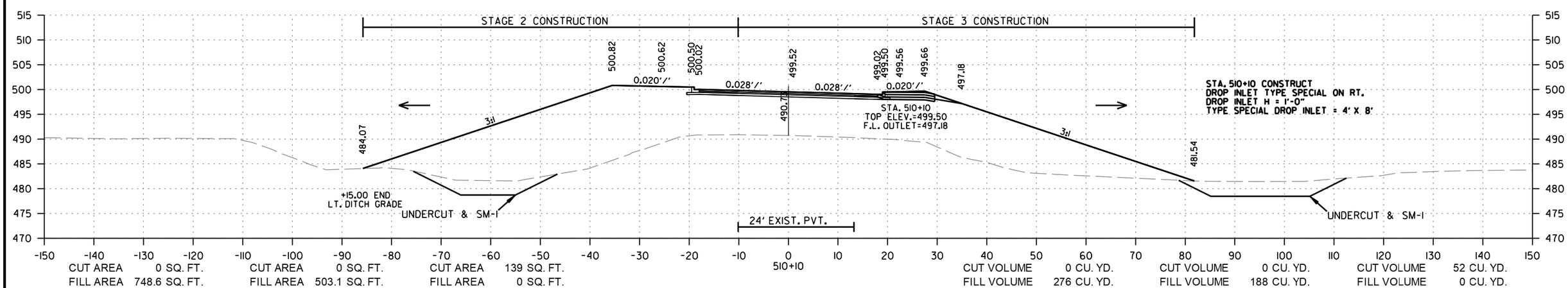

E. CENTER ST.
STA. 510+10 TO STA. 511+00

rb43088 10/30/2023
R040861.DGN

DATE REVISED	DATE REVISED	FED.RD. DIST.NO.	STATE	JOB NO.	SHEET NO.	TOTAL SHEETS
10-30-2023		6	ARK.	040861	260	291
		CROSS SECTIONS				

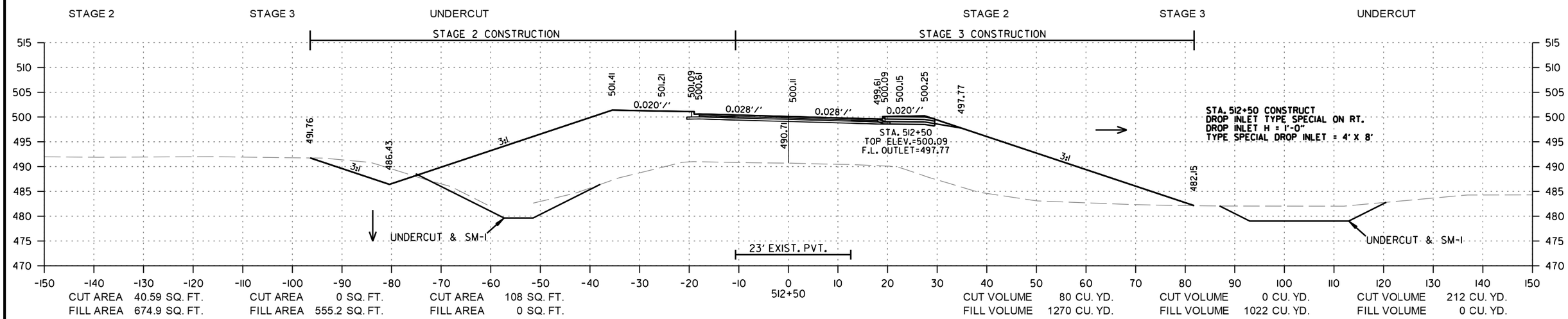

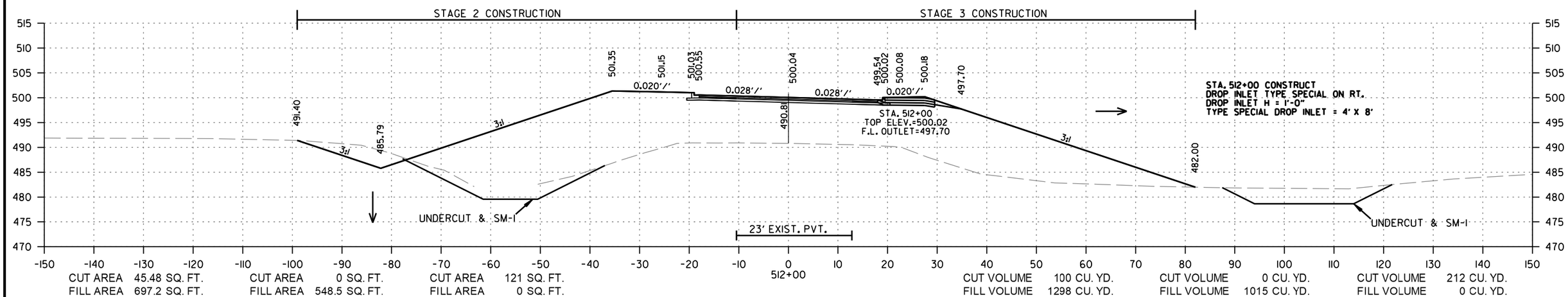

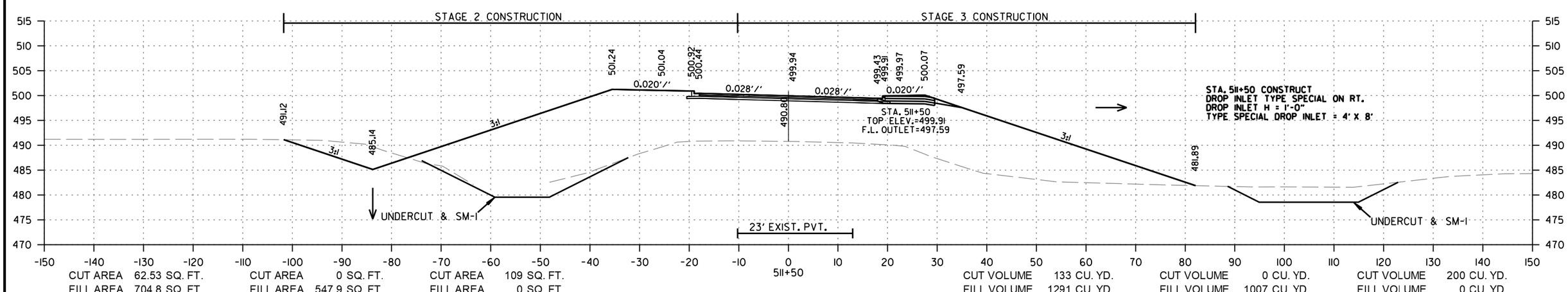

E. CENTER ST.
STA. 511+50 TO STA. 512+50

rb43088 10/30/2023
R040861.DGN

DATE REVISED	DATE REVISED	FED.RD. DIST.NO.	STATE	JOB NO.	SHEET NO.	TOTAL SHEETS
10-30-2023		6	ARK.	040861	261	291
		CROSS SECTIONS				

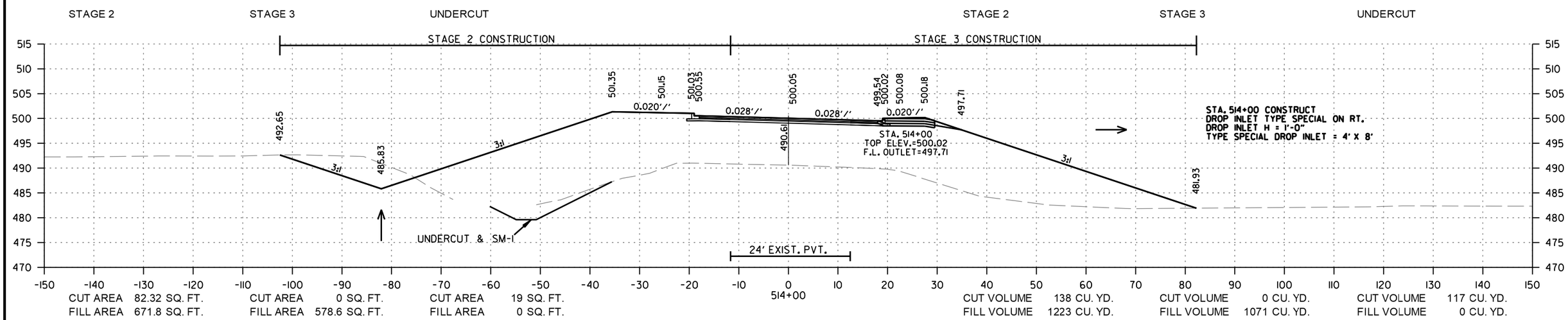

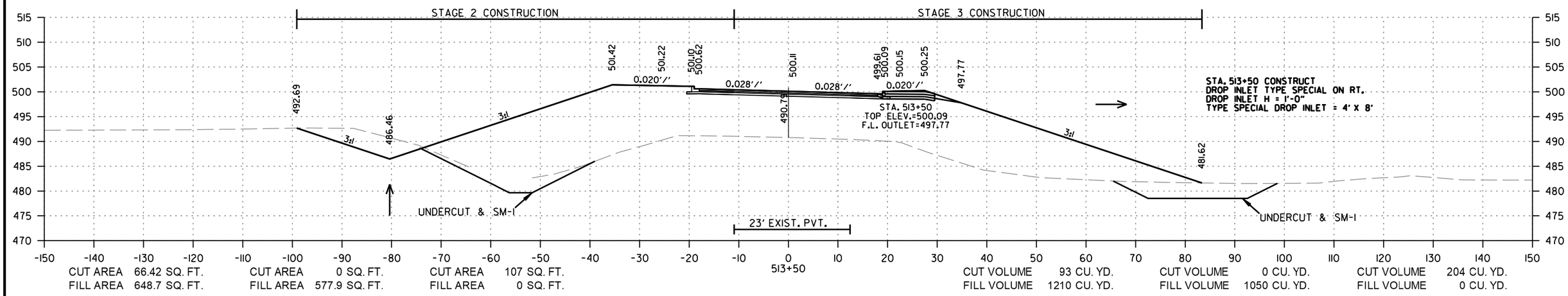

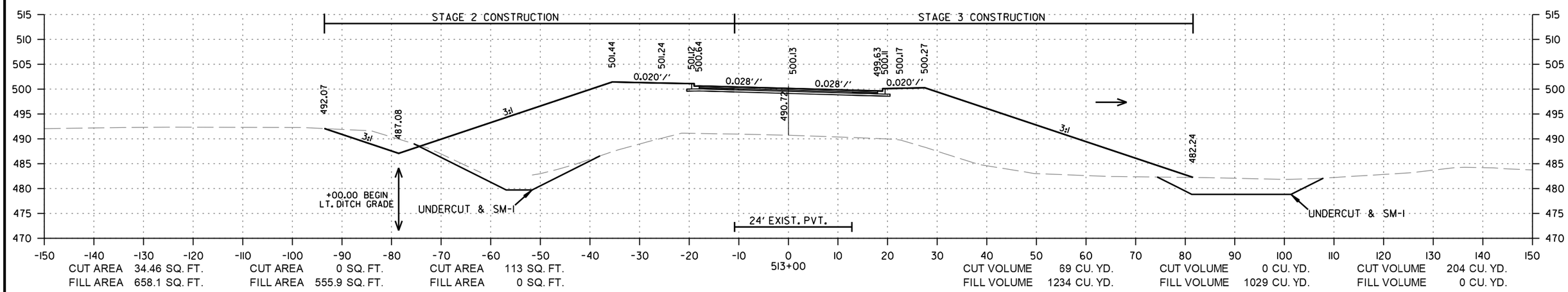

E. CENTER ST.
STA. 513+00 TO STA. 514+00

rb43088 10/30/2023
R04086I.DGN

DATE REVISED	DATE REVISED	FED.RD. DIST.NO.	STATE	JOB NO.	SHEET NO.	TOTAL SHEETS
10-30-2023		6	ARK.	040861	262	291
		CROSS SECTIONS				

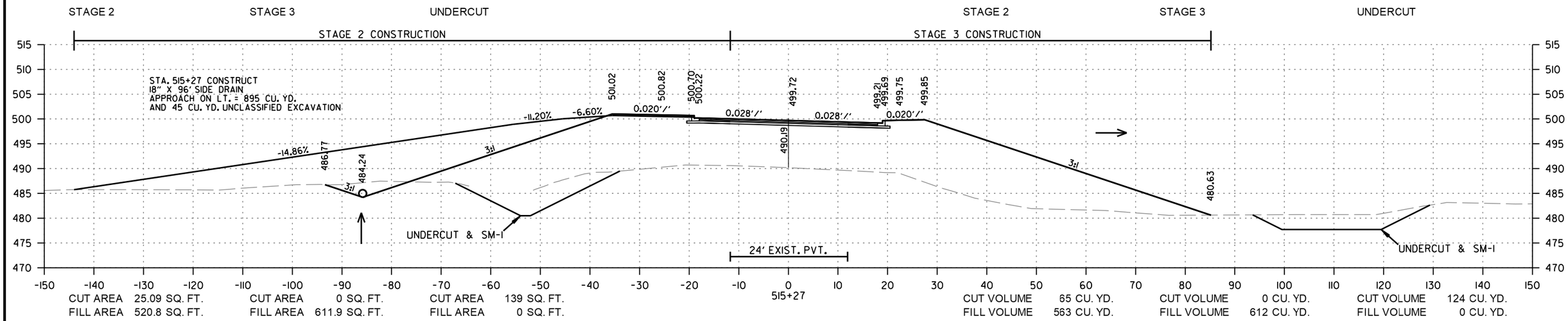

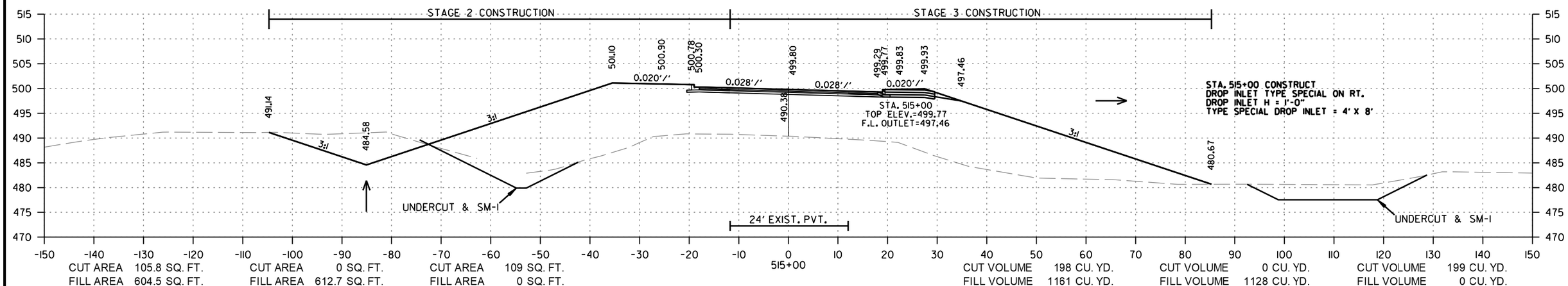

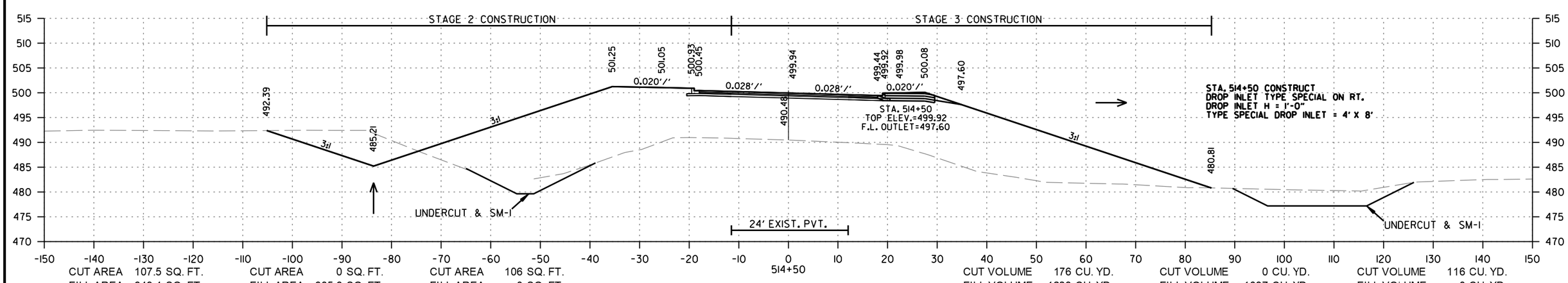

E. CENTER ST.
STA. 514+50 TO STA. 515+27

rb43088 10/30/2023
R040861.DGN

DATE REVISED	DATE REVISED	FED.RD. DIST.NO.	STATE	JOB NO.	SHEET NO.	TOTAL SHEETS
10-30-2023		6	ARK.	040861	263	291
		CROSS SECTIONS				

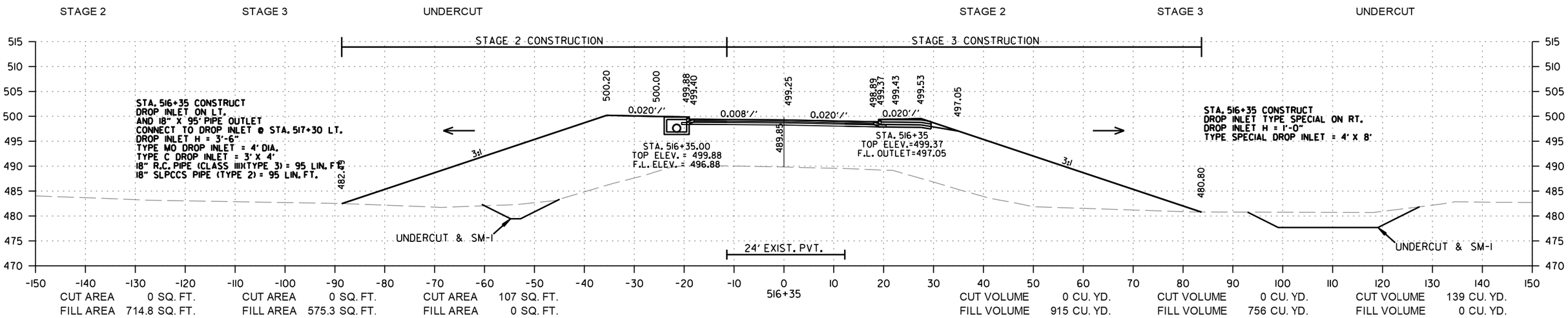

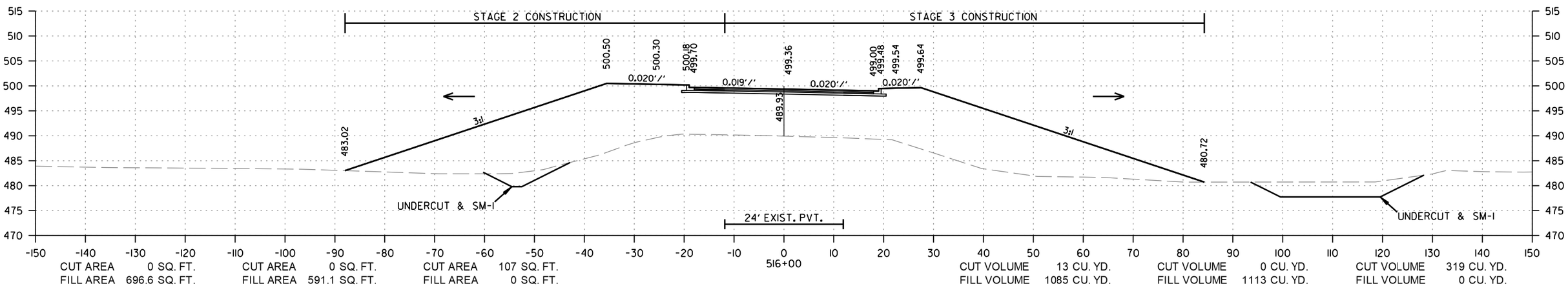

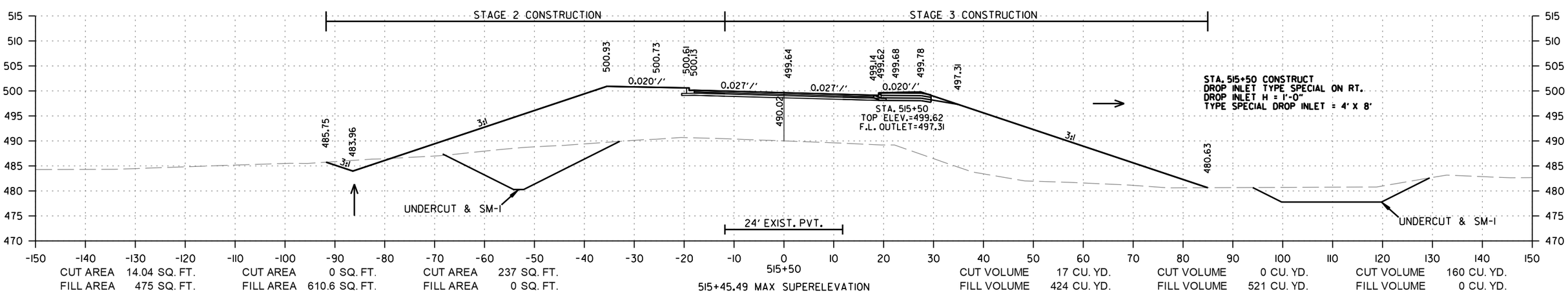

E. CENTER ST.
STA. 515+50 TO STA. 516+35

rb43088 10/30/2023
R040861.DGN

DATE REVISED	DATE REVISED	FED.RD. DIST.NO.	STATE	JOB NO.	SHEET NO.	TOTAL SHEETS
10-30-2023		6	ARK.	040861	264	291
		CROSS SECTIONS				

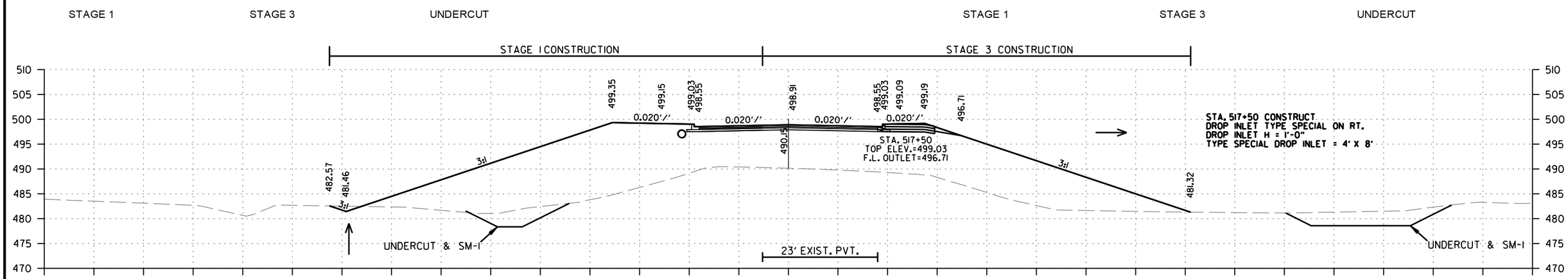

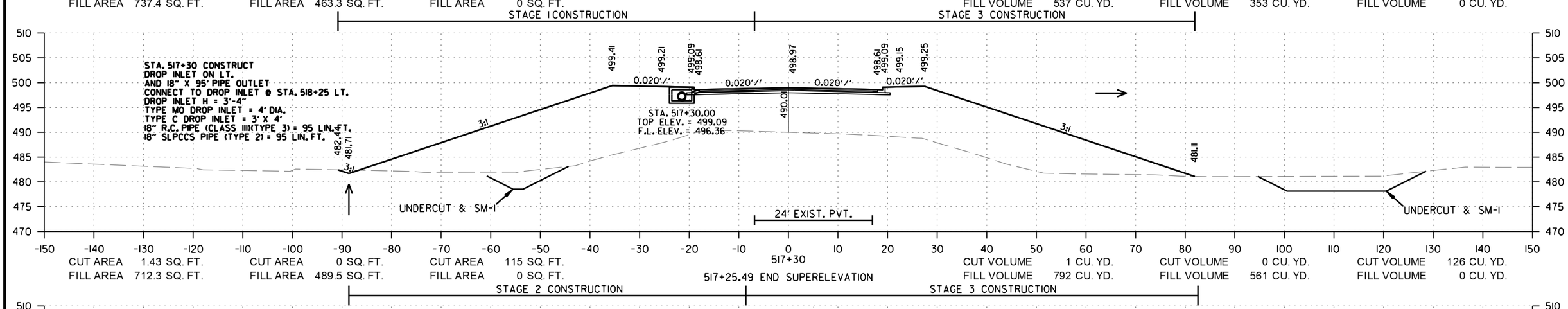

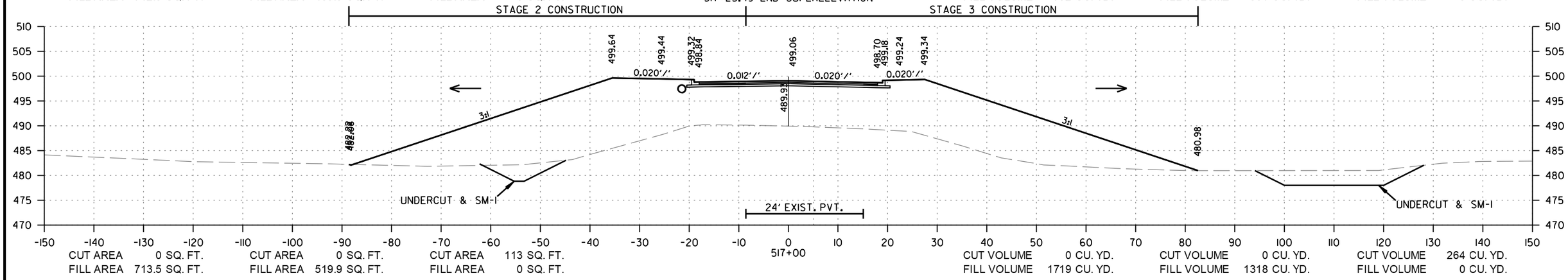

E. CENTER ST.
STA. 517+00 TO STA. 517+50

rb43088 10/30/2023
R040861.DGN

DATE REVISED	DATE REVISED	FED.RD. DIST.NO.	STATE	JOB NO.	SHEET NO.	TOTAL SHEETS
10-30-2023		6	ARK.	040861	265	291
		CROSS SECTIONS				

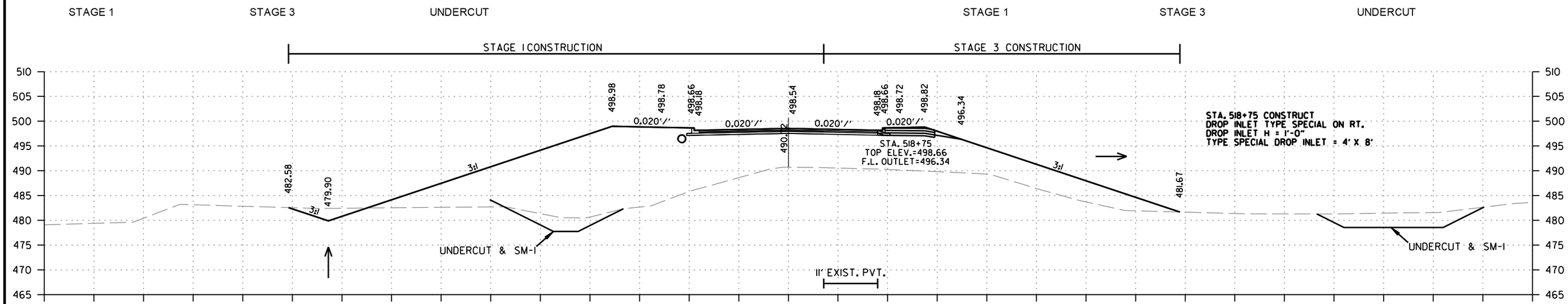

CUT AREA	19.62 SQ. FT.	CUT AREA	0 SQ. FT.	CUT AREA	118 SQ. FT.	CUT VOLUME	28 CU. YD.	CUT VOLUME	0 CU. YD.	CUT VOLUME	218 CU. YD.
FILL AREA	894.1 SQ. FT.	FILL AREA	312.4 SQ. FT.	FILL AREA	0 SQ. FT.	FILL VOLUME	1588 CU. YD.	FILL VOLUME	634 CU. YD.	FILL VOLUME	0 CU. YD.

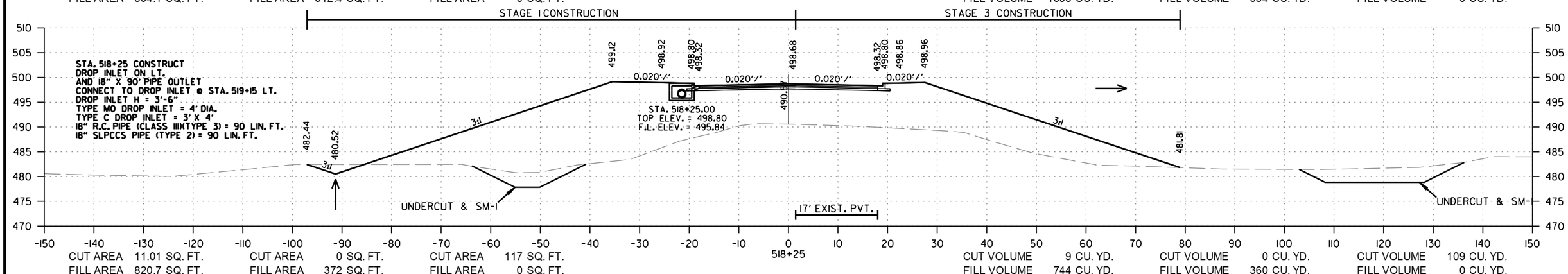

CUT AREA	11.01 SQ. FT.	CUT AREA	0 SQ. FT.	CUT AREA	117 SQ. FT.	CUT VOLUME	9 CU. YD.	CUT VOLUME	0 CU. YD.	CUT VOLUME	109 CU. YD.
FILL AREA	820.7 SQ. FT.	FILL AREA	372 SQ. FT.	FILL AREA	0 SQ. FT.	FILL VOLUME	744 CU. YD.	FILL VOLUME	360 CU. YD.	FILL VOLUME	0 CU. YD.

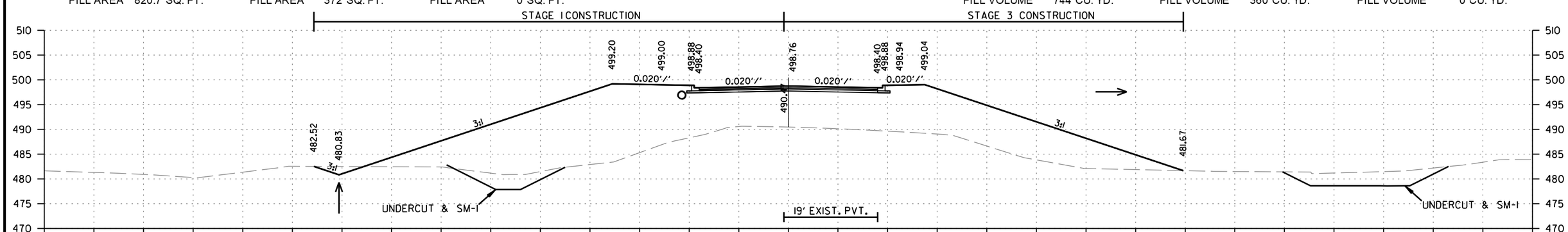

CUT AREA	8.28 SQ. FT.	CUT AREA	0 SQ. FT.	CUT AREA	117 SQ. FT.	CUT VOLUME	11 CU. YD.	CUT VOLUME	0 CU. YD.	CUT VOLUME	214 CU. YD.
FILL AREA	786.2 SQ. FT.	FILL AREA	405.4 SQ. FT.	FILL AREA	0 SQ. FT.	FILL VOLUME	1411 CU. YD.	FILL VOLUME	804 CU. YD.	FILL VOLUME	0 CU. YD.

E. CENTER ST.
STA. 518+00 TO STA. 518+75

rb43088 10/30/2023
R040861.DGN

DATE REVISED	DATE REVISED	FED.RD. DIST.NO.	STATE	JOB NO.	SHEET NO.	TOTAL SHEETS
10-30-2023		6	ARK.	040861	266	291
		CROSS SECTIONS				

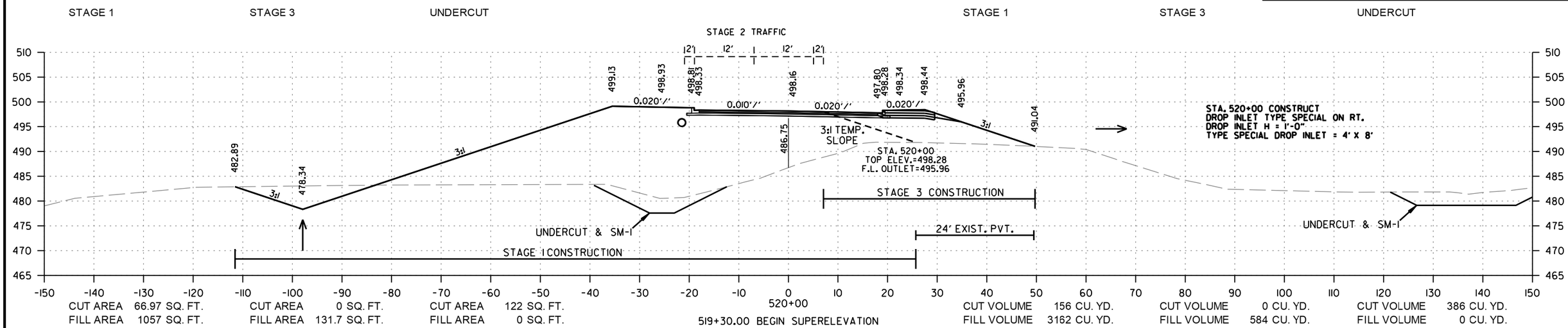

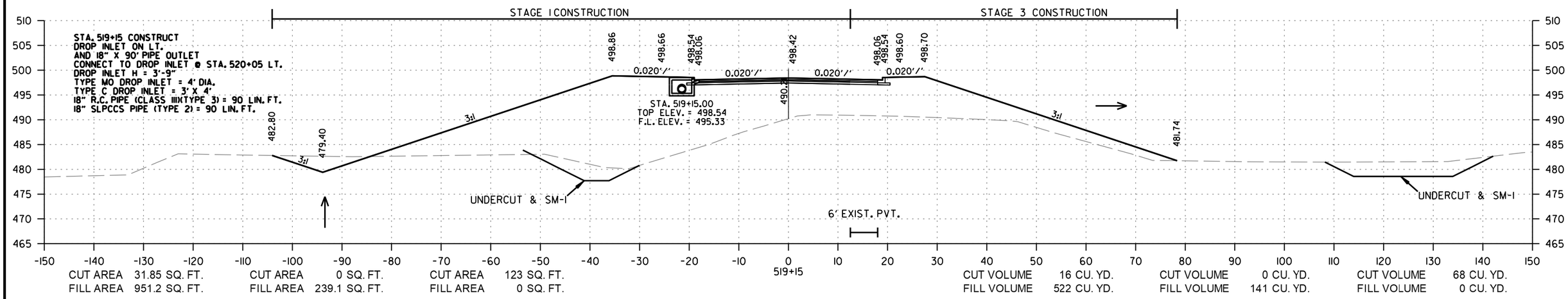

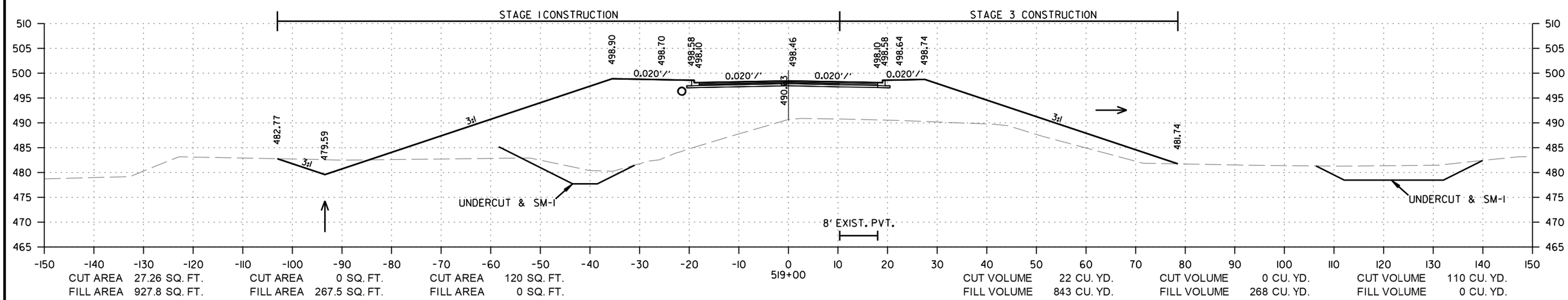

E. CENTER ST.
STA. 519+00 TO STA. 520+00

rb43088 10/30/2023
R040861.DGN

DATE REVISED	DATE REVISED	FED.RD. DIST.NO.	STATE	JOB NO.	SHEET NO.	TOTAL SHEETS
		6	ARK.	040861	267	291
		CROSS SECTIONS				

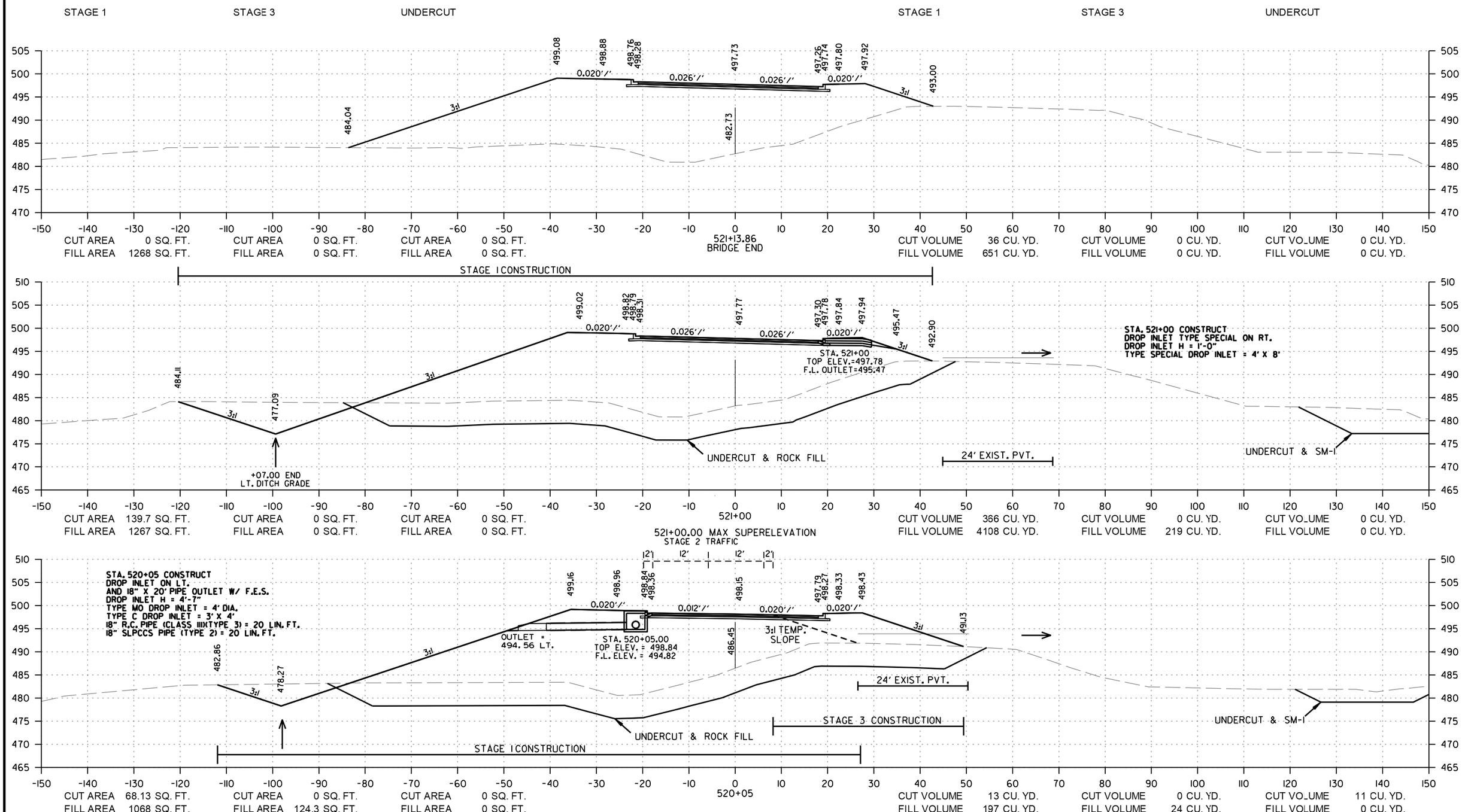

E. CENTER ST.
STA. 520+05 TO STA. 521+13.86

rb43088 9/21/2023
R04086I.DGN

DATE REVISED	DATE REVISED	FED.RD. DIST.NO.	STATE	JOB NO.	SHEET NO.	TOTAL SHEETS
		6	ARK.	040861	268	291
		CROSS SECTIONS				

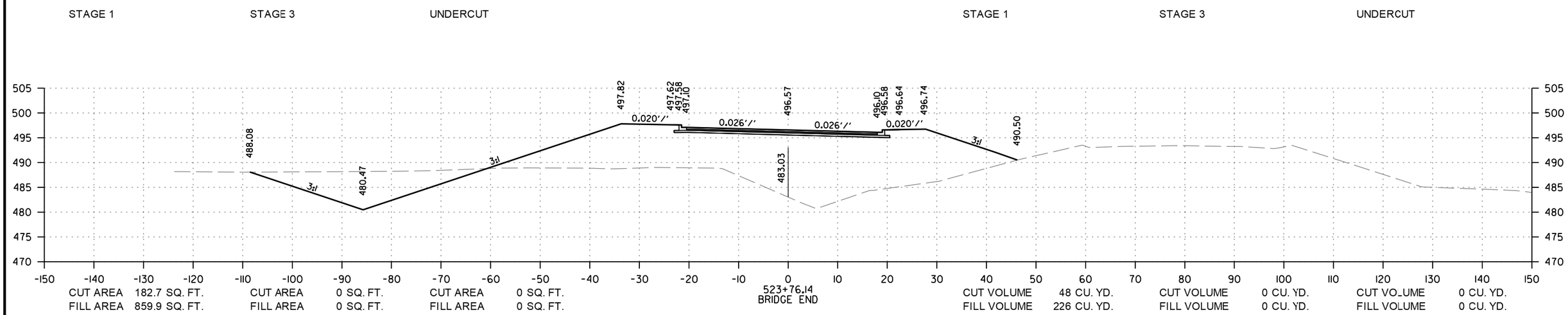

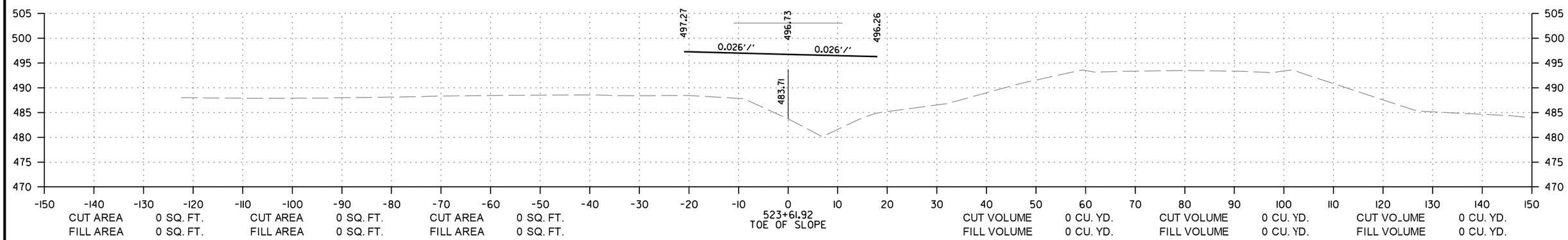

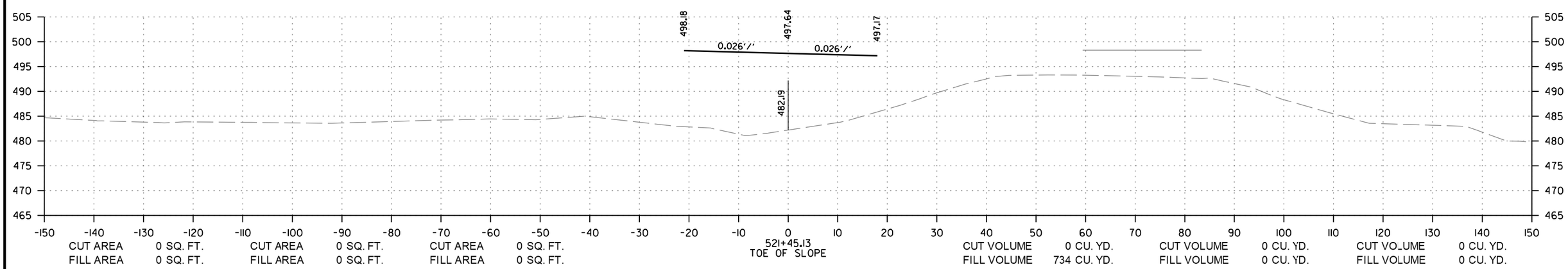

E. CENTER ST.
STA. 521+45.13 TO STA. 523+76.14

rb43088 9/21/2023
R040861.DGN

DATE REVISED	DATE REVISED	FED.RD. DIST.NO.	STATE	JOB NO.	SHEET NO.	TOTAL SHEETS
		6	ARK.	040861	269	291
		CROSS SECTIONS				

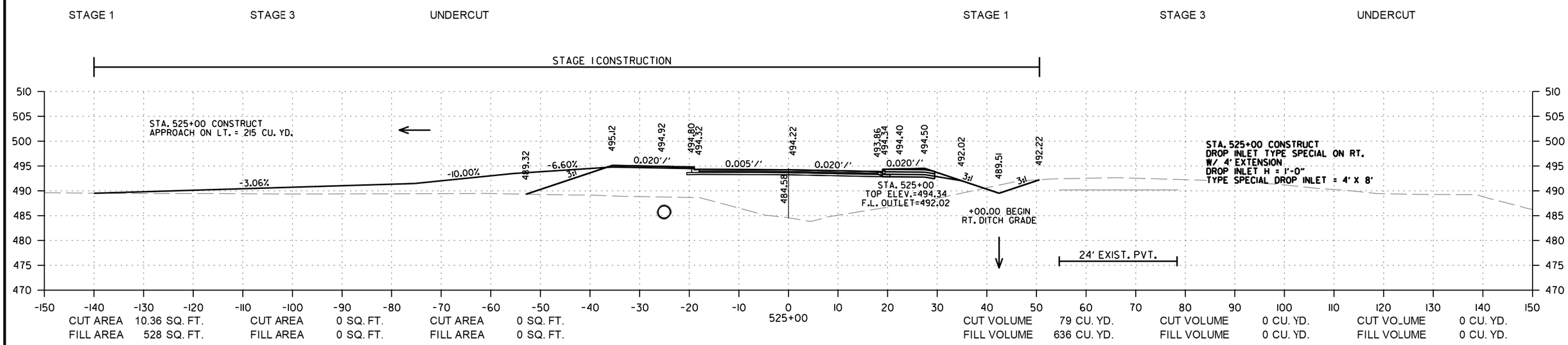

E. CENTER ST.
STA. 524+00 TO STA. 525+00

rb43088 9/21/2023
R040861.DGN

DATE REVISED	DATE REVISED	FED.RD. DIST.NO.	STATE	JOB NO.	SHEET NO.	TOTAL SHEETS
		6	ARK.	040861	270	291
		CROSS SECTIONS				

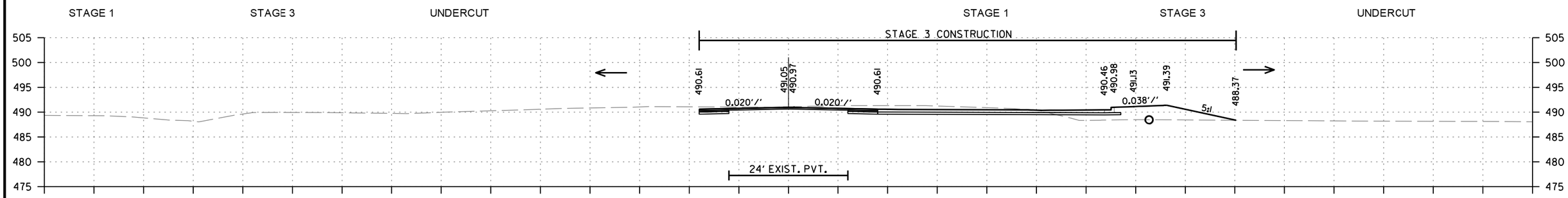

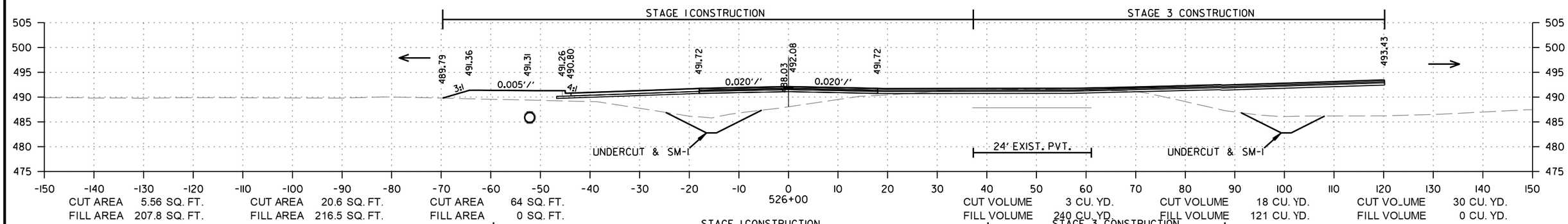

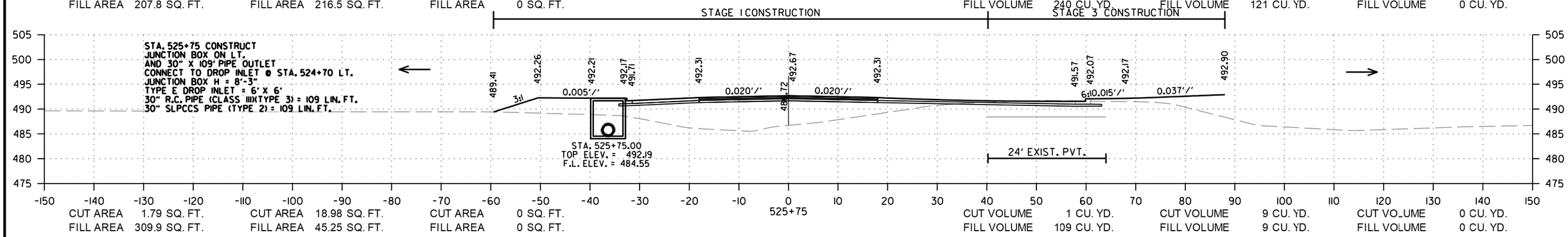

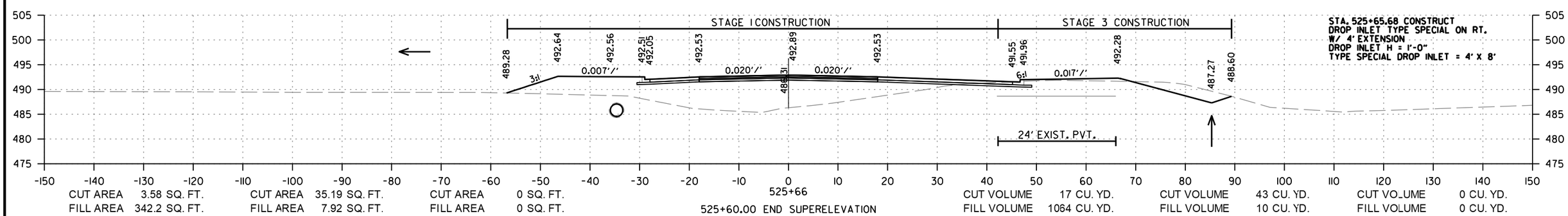

E. CENTER ST.
STA. 525+66 TO STA. 527+00

rb43088 9/21/2023
R040861.DGN

DATE REVISED	DATE REVISED	FED.RD. DIST.NO.	STATE	JOB NO.	SHEET NO.	TOTAL SHEETS
		6	ARK.	040861	271	291
		CROSS SECTIONS				

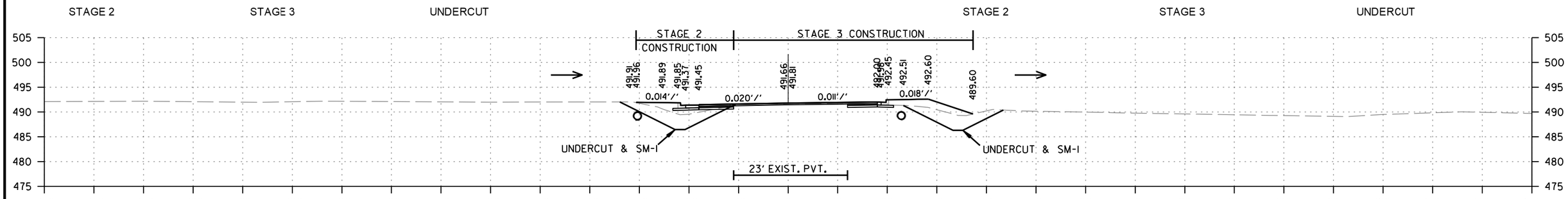

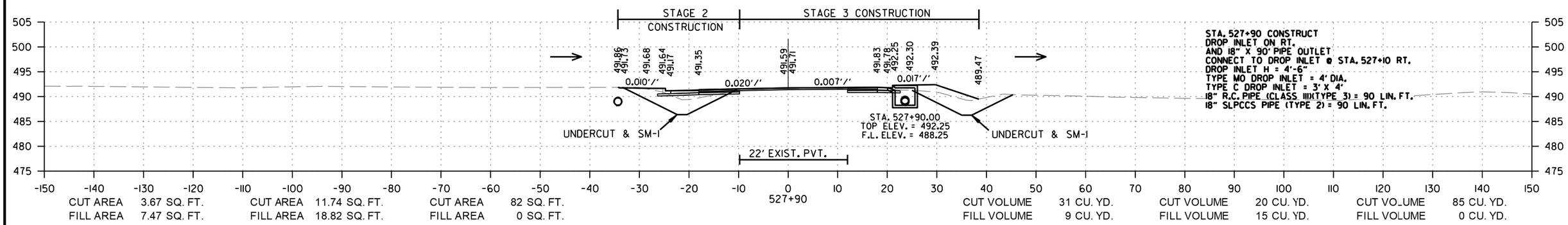

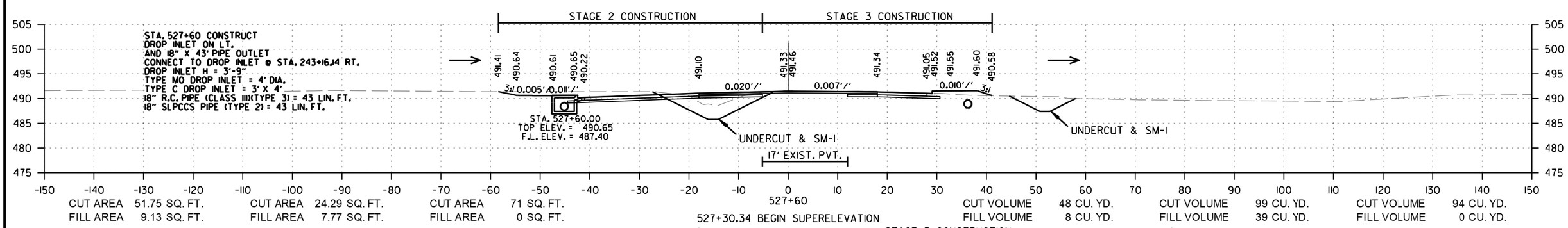

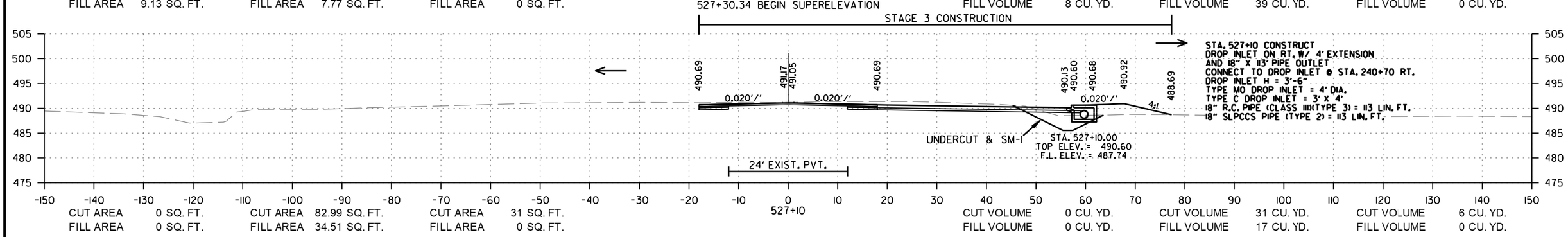

E. CENTER ST.
STA. 527+10 TO STA. 528+00

rb43088 9/21/2023
R040861.DGN

DATE REVISED	DATE REVISED	FED.RD. DIST.NO.	STATE	JOB NO.	SHEET NO.	TOTAL SHEETS
		6	ARK.	040861	272	291
		CROSS SECTIONS				

STAGE 2 | STAGE 3 | UNDERCUT | STAGE 2 | STAGE 3 | UNDERCUT

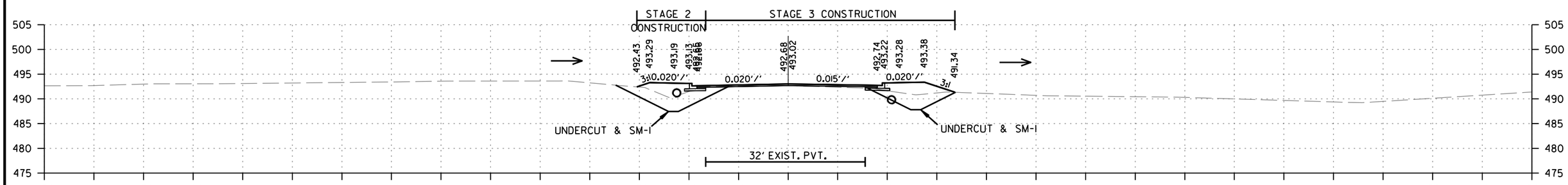

CUT AREA 1.66 SQ. FT. FILL AREA 19.51 SQ. FT. | CUT AREA 2.57 SQ. FT. FILL AREA 23.42 SQ. FT. | CUT AREA 78 SQ. FT. FILL AREA 0 SQ. FT.

529+00

CUT VOLUME 3 CU. YD. FILL VOLUME 13 CU. YD. | CUT VOLUME 3 CU. YD. FILL VOLUME 28 CU. YD. | CUT VOLUME 99 CU. YD. FILL VOLUME 0 CU. YD.

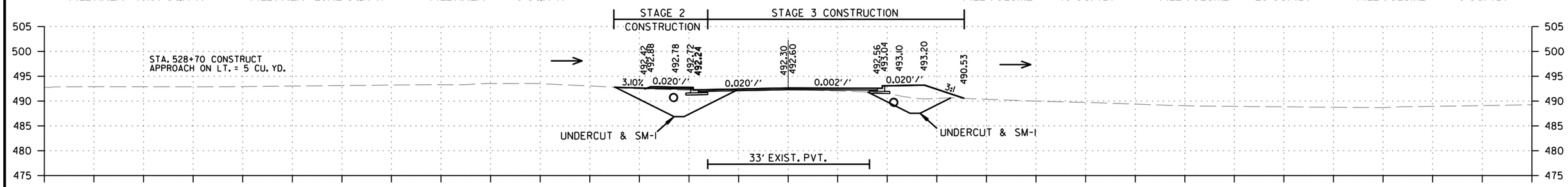

CUT AREA 3.47 SQ. FT. FILL AREA 4.59 SQ. FT. | CUT AREA 2.89 SQ. FT. FILL AREA 27.84 SQ. FT. | CUT AREA 100 SQ. FT. FILL AREA 0 SQ. FT.

528+70

CUT VOLUME 1 CU. YD. FILL VOLUME 1 CU. YD. | CUT VOLUME 1 CU. YD. FILL VOLUME 5 CU. YD. | CUT VOLUME 18 CU. YD. FILL VOLUME 0 CU. YD.

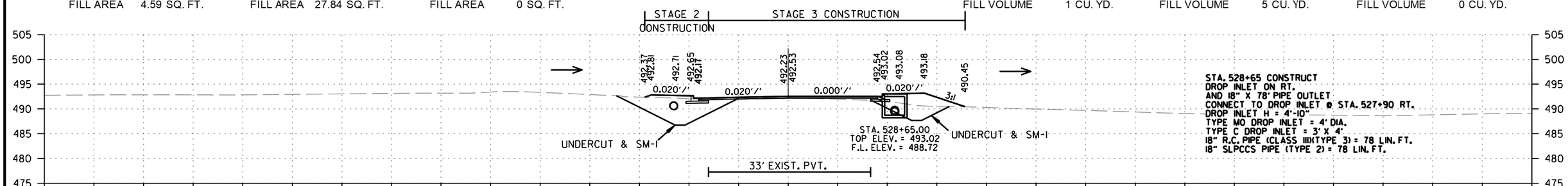

CUT AREA 3.44 SQ. FT. FILL AREA 4.55 SQ. FT. | CUT AREA 2.92 SQ. FT. FILL AREA 26.71 SQ. FT. | CUT AREA 99 SQ. FT. FILL AREA 0 SQ. FT.

528+65

CUT VOLUME 4 CU. YD. FILL VOLUME 20 CU. YD. | CUT VOLUME 6 CU. YD. FILL VOLUME 45 CU. YD. | CUT VOLUME 143 CU. YD. FILL VOLUME 0 CU. YD.

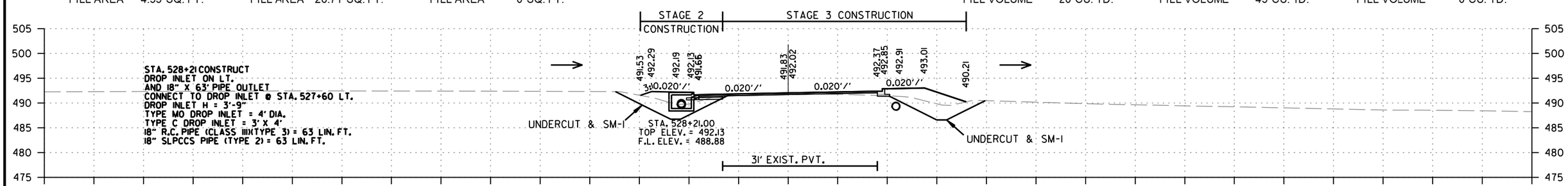

CUT AREA 1.96 SQ. FT. FILL AREA 19.46 SQ. FT. | CUT AREA 4.1 SQ. FT. FILL AREA 28.77 SQ. FT. | CUT AREA 76 SQ. FT. FILL AREA 0 SQ. FT.

528+21

528+20.34 MAX SUPERELEVATION

CUT VOLUME 1 CU. YD. FILL VOLUME 13 CU. YD. | CUT VOLUME 5 CU. YD. FILL VOLUME 20 CU. YD. | CUT VOLUME 61 CU. YD. FILL VOLUME 0 CU. YD.

E. CENTER ST.
STA. 528+21 TO STA. 529+00

rb43088 9/21/2023
R040861.DGN

DATE REVISED	DATE REVISED	FED.RD. DIST.NO.	STATE	JOB NO.	SHEET NO.	TOTAL SHEETS
		6	ARK.	040861	273	291
		CROSS SECTIONS				

STAGE 2 | STAGE 3 | UNDERCUT | STAGE 2 | STAGE 3 | UNDERCUT

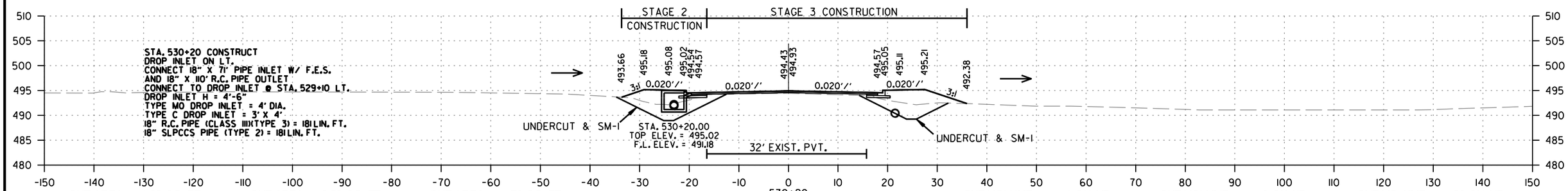

CUT AREA	1.32 SQ. FT.	CUT AREA	0.53 SQ. FT.	CUT AREA	76 SQ. FT.	CUT VOLUME	1 CU. YD.	CUT VOLUME	0 CU. YD.	CUT VOLUME	56 CU. YD.
FILL AREA	26.93 SQ. FT.	FILL AREA	32.4 SQ. FT.	FILL AREA	0 SQ. FT.	FILL VOLUME	20 CU. YD.	FILL VOLUME	23 CU. YD.	FILL VOLUME	0 CU. YD.

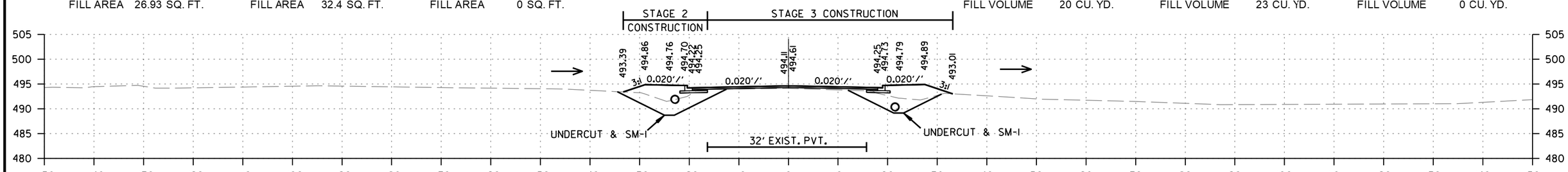

CUT AREA	0.77 SQ. FT.	CUT AREA	0.48 SQ. FT.	CUT AREA	76 SQ. FT.	CUT VOLUME	2 CU. YD.	CUT VOLUME	1 CU. YD.	CUT VOLUME	99 CU. YD.
FILL AREA	25.83 SQ. FT.	FILL AREA	28.63 SQ. FT.	FILL AREA	0 SQ. FT.	FILL VOLUME	31 CU. YD.	FILL VOLUME	39 CU. YD.	FILL VOLUME	0 CU. YD.

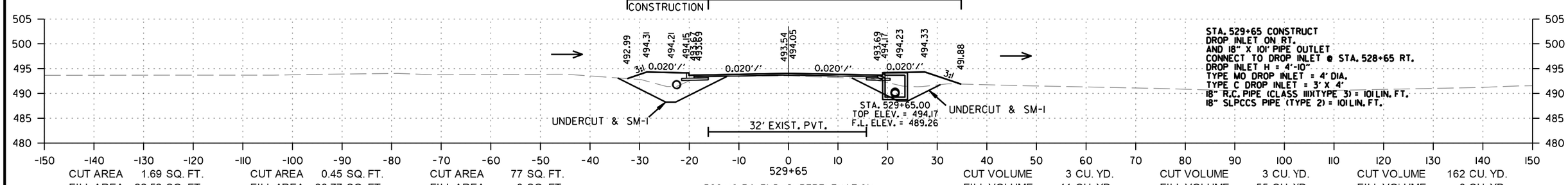

CUT AREA	1.69 SQ. FT.	CUT AREA	0.45 SQ. FT.	CUT AREA	77 SQ. FT.	CUT VOLUME	3 CU. YD.	CUT VOLUME	3 CU. YD.	CUT VOLUME	162 CU. YD.
FILL AREA	22.52 SQ. FT.	FILL AREA	30.77 SQ. FT.	FILL AREA	0 SQ. FT.	FILL VOLUME	41 CU. YD.	FILL VOLUME	55 CU. YD.	FILL VOLUME	0 CU. YD.

529+10.34 END SUPERELEVATION

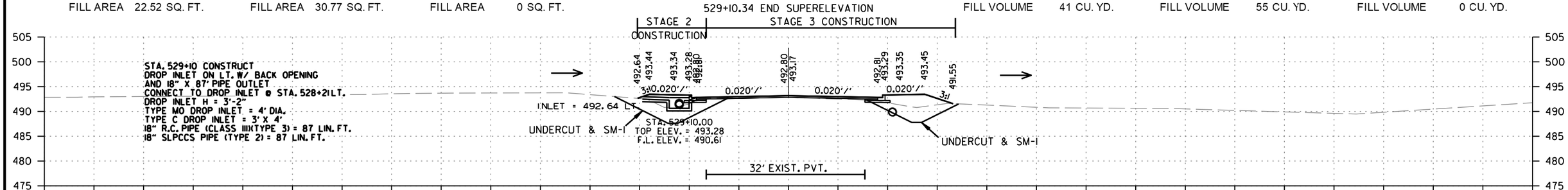

CUT AREA	1.45 SQ. FT.	CUT AREA	2.36 SQ. FT.	CUT AREA	82 SQ. FT.	CUT VOLUME	1 CU. YD.	CUT VOLUME	1 CU. YD.	CUT VOLUME	30 CU. YD.
FILL AREA	18.05 SQ. FT.	FILL AREA	23.55 SQ. FT.	FILL AREA	0 SQ. FT.	FILL VOLUME	7 CU. YD.	FILL VOLUME	9 CU. YD.	FILL VOLUME	0 CU. YD.

E. CENTER ST.
STA. 529+10 TO STA. 530+20

rb43088 9/21/2023
R040861.DGN

DATE REVISED	DATE REVISED	FED.RD. DIST.NO.	STATE	JOB NO.	SHEET NO.	TOTAL SHEETS
10-24-2023		6	ARK.	040861	274	291
		CROSS SECTIONS				

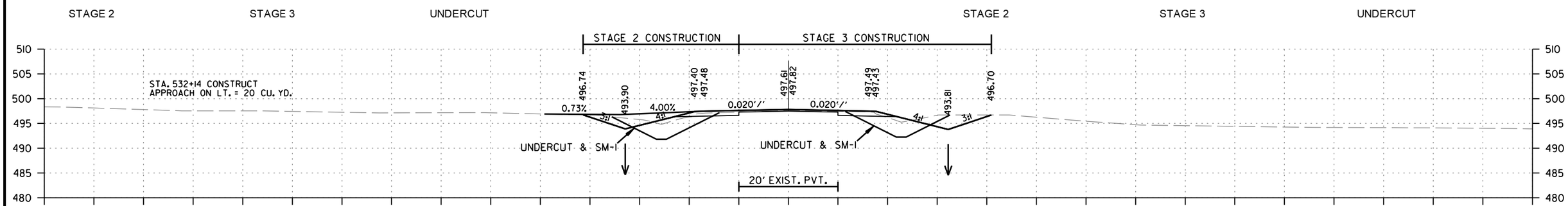

CUT AREA 21.82 SQ. FT. FILL AREA 4.13 SQ. FT.
CUT AREA 32.78 SQ. FT. FILL AREA 2.78 SQ. FT.
CUT AREA 86 SQ. FT. FILL AREA 0 SQ. FT.
CUT VOLUME 85 CU. YD. FILL VOLUME 22 CU. YD.
CUT VOLUME 81 CU. YD. FILL VOLUME 20 CU. YD.
CUT VOLUME 310 CU. YD. FILL VOLUME 0 CU. YD.

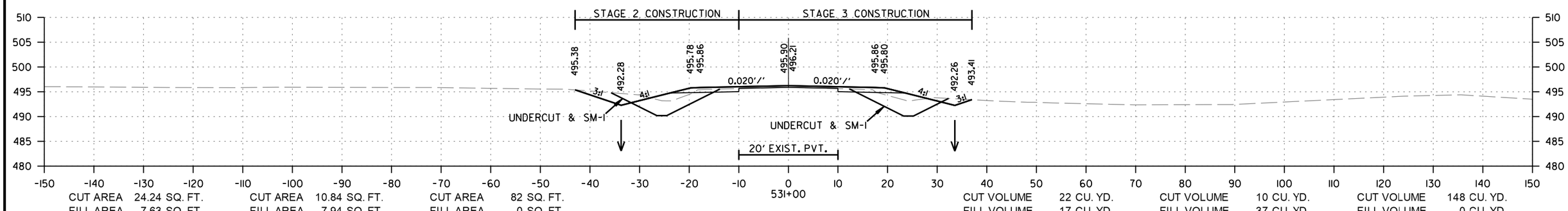

CUT AREA 24.24 SQ. FT. FILL AREA 7.63 SQ. FT.
CUT AREA 10.84 SQ. FT. FILL AREA 7.94 SQ. FT.
CUT AREA 82 SQ. FT. FILL AREA 0 SQ. FT.
CUT VOLUME 22 CU. YD. FILL VOLUME 17 CU. YD.
CUT VOLUME 10 CU. YD. FILL VOLUME 37 CU. YD.
CUT VOLUME 148 CU. YD. FILL VOLUME 0 CU. YD.

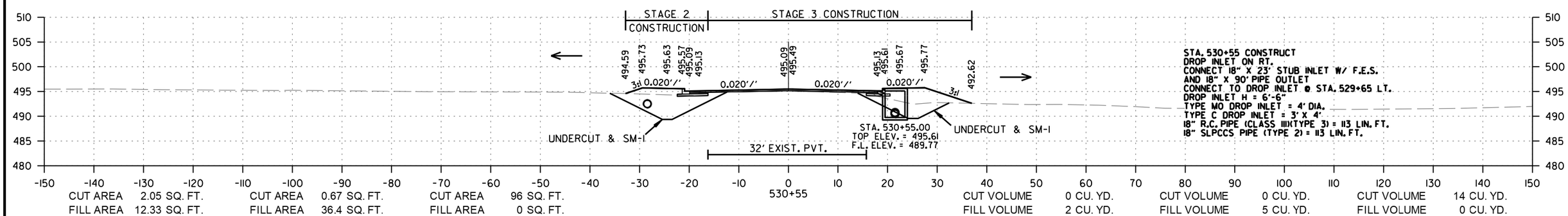

CUT AREA 2.05 SQ. FT. FILL AREA 12.33 SQ. FT.
CUT AREA 0.67 SQ. FT. FILL AREA 36.4 SQ. FT.
CUT AREA 96 SQ. FT. FILL AREA 0 SQ. FT.
CUT VOLUME 0 CU. YD. FILL VOLUME 2 CU. YD.
CUT VOLUME 0 CU. YD. FILL VOLUME 5 CU. YD.
CUT VOLUME 14 CU. YD. FILL VOLUME 0 CU. YD.

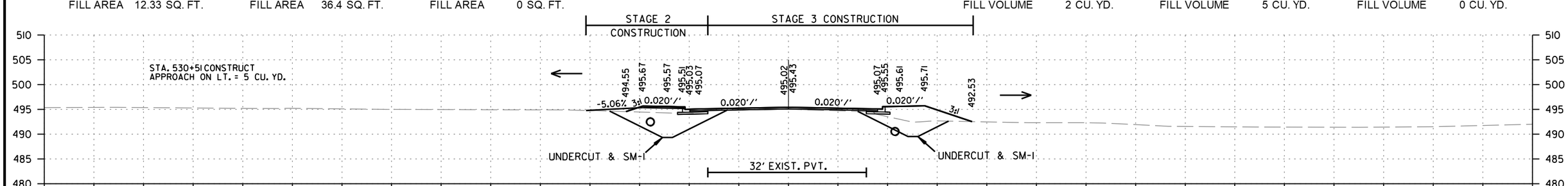

CUT AREA 1.98 SQ. FT. FILL AREA 12.12 SQ. FT.
CUT AREA 0.65 SQ. FT. FILL AREA 36.56 SQ. FT.
CUT AREA 96 SQ. FT. FILL AREA 0 SQ. FT.
CUT VOLUME 2 CU. YD. FILL VOLUME 22 CU. YD.
CUT VOLUME 1 CU. YD. FILL VOLUME 40 CU. YD.
CUT VOLUME 99 CU. YD. FILL VOLUME 0 CU. YD.

E. CENTER ST.
STA. 530+51 TO STA. 532+00

rb43088 10/24/2023
R040861.DGN

DATE REVISED	DATE REVISED	FED.RD. DIST.NO.	STATE	JOB NO.	SHEET NO.	TOTAL SHEETS
		6	ARK.	040861	275	291
		CROSS SECTIONS				

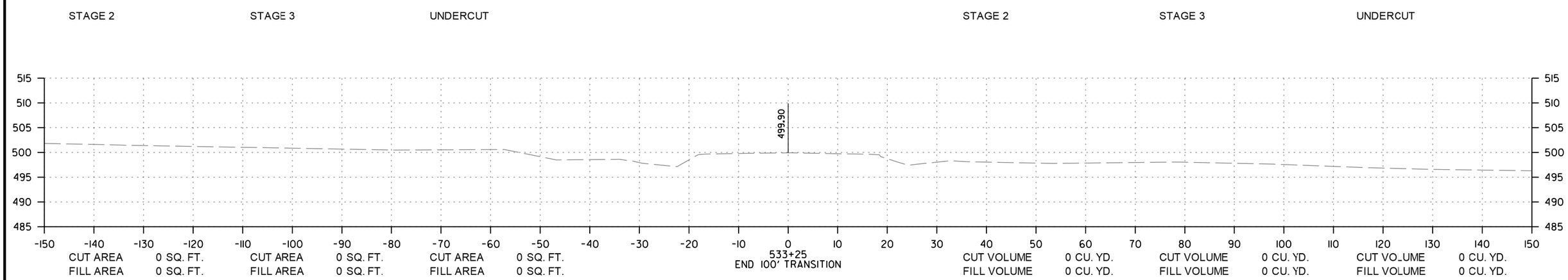

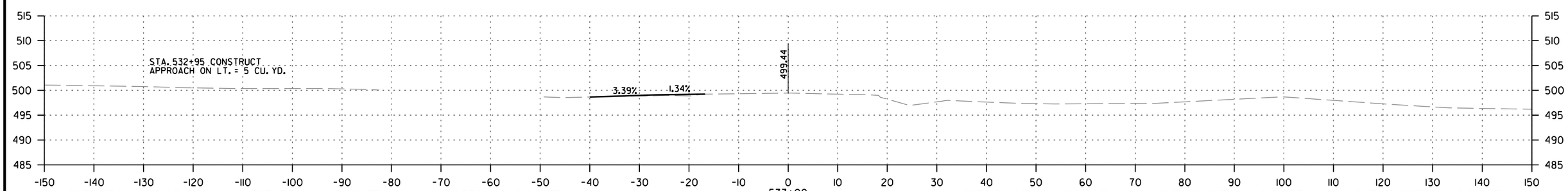

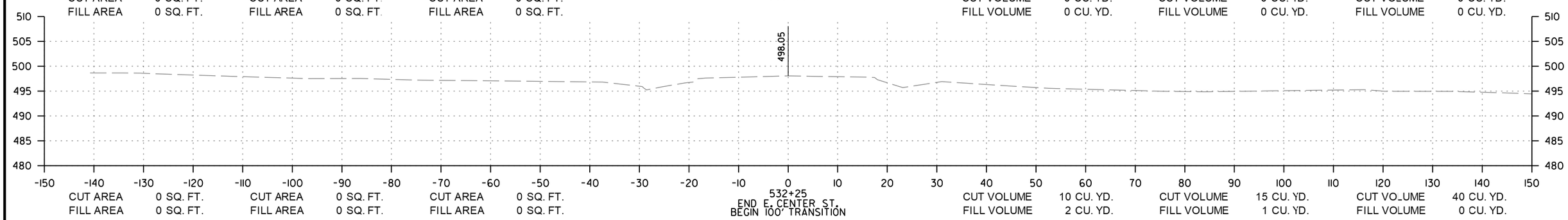

E. CENTER ST.
STA. 532+25 TO STA. 533+25

rb43088 9/21/2023
R040861.DGN

DATE REVISED	DATE REVISED	FED.RD. DIST.NO.	STATE	JOB NO.	SHEET NO.	TOTAL SHEETS
		6	ARK.	040861	276	291
		CROSS SECTIONS				

STAGE 2 | STAGE 3 | UNDERCUT | STAGE 2 | STAGE 3 | UNDERCUT

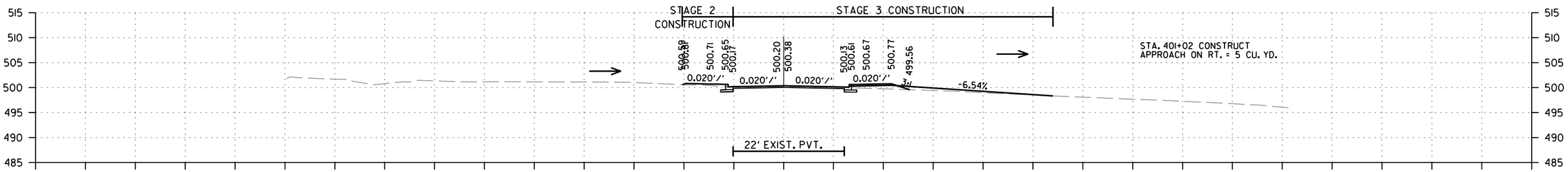

CUT AREA	1.86 SQ. FT.	CUT AREA	1.66 SQ. FT.	CUT AREA	0 SQ. FT.	CUT VOLUME	0 CU. YD.	CUT VOLUME	0 CU. YD.	CUT VOLUME	0 CU. YD.
FILL AREA	2.51 SQ. FT.	FILL AREA	8.98 SQ. FT.	FILL AREA	0 SQ. FT.	FILL VOLUME	0 CU. YD.	FILL VOLUME	1 CU. YD.	FILL VOLUME	0 CU. YD.

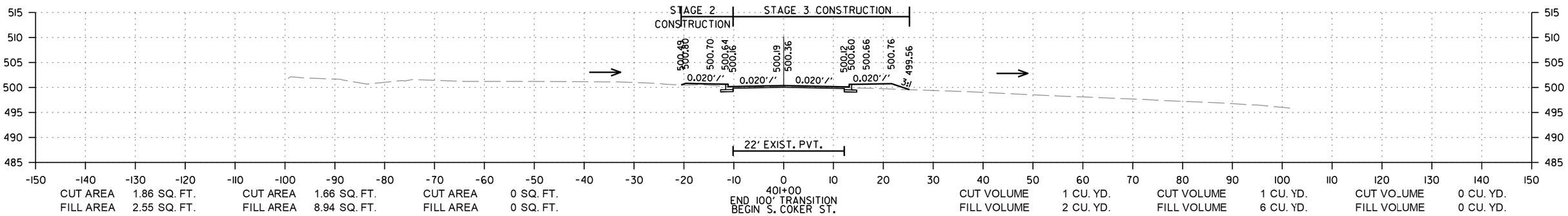

CUT AREA	1.86 SQ. FT.	CUT AREA	1.66 SQ. FT.	CUT AREA	0 SQ. FT.	CUT VOLUME	1 CU. YD.	CUT VOLUME	1 CU. YD.	CUT VOLUME	0 CU. YD.
FILL AREA	2.55 SQ. FT.	FILL AREA	8.94 SQ. FT.	FILL AREA	0 SQ. FT.	FILL VOLUME	2 CU. YD.	FILL VOLUME	6 CU. YD.	FILL VOLUME	0 CU. YD.

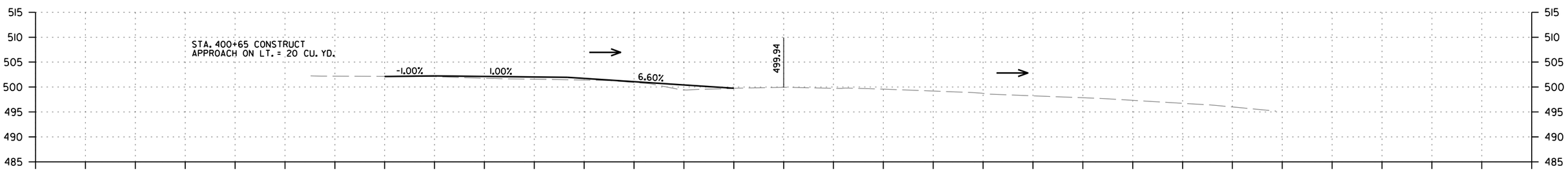

CUT AREA	0 SQ. FT.	CUT AREA	0 SQ. FT.	CUT AREA	0 SQ. FT.	CUT VOLUME	0 CU. YD.	CUT VOLUME	0 CU. YD.	CUT VOLUME	0 CU. YD.
FILL AREA	0 SQ. FT.	FILL AREA	0 SQ. FT.	FILL AREA	0 SQ. FT.	FILL VOLUME	0 CU. YD.	FILL VOLUME	0 CU. YD.	FILL VOLUME	0 CU. YD.

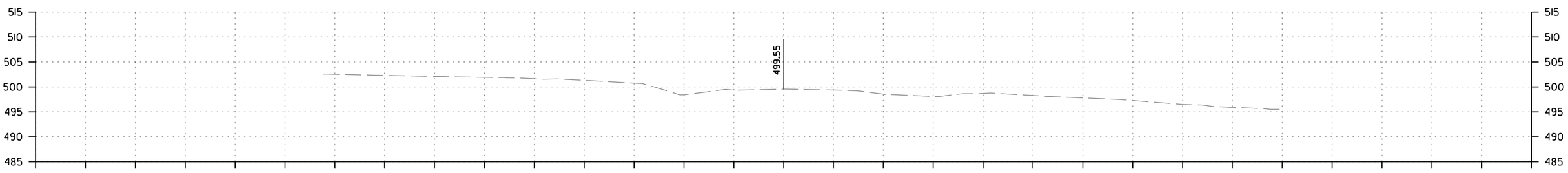

CUT AREA	0 SQ. FT.	CUT AREA	0 SQ. FT.	CUT AREA	0 SQ. FT.	CUT VOLUME	0 CU. YD.	CUT VOLUME	0 CU. YD.	CUT VOLUME	0 CU. YD.
FILL AREA	0 SQ. FT.	FILL AREA	0 SQ. FT.	FILL AREA	0 SQ. FT.	FILL VOLUME	0 CU. YD.	FILL VOLUME	0 CU. YD.	FILL VOLUME	0 CU. YD.

S. COKER ST.
STA. 400+00 TO STA. 401+02

rb43088 9/21/2023
R040861.DGN

DATE REVISED	DATE REVISED	FED.RD. DIST.NO.	STATE	JOB NO.	SHEET NO.	TOTAL SHEETS
		6	ARK.	040861	277	291
		CROSS SECTIONS				

STAGE 2 | STAGE 3 | UNDERCUT | STAGE 2 | STAGE 3 | UNDERCUT

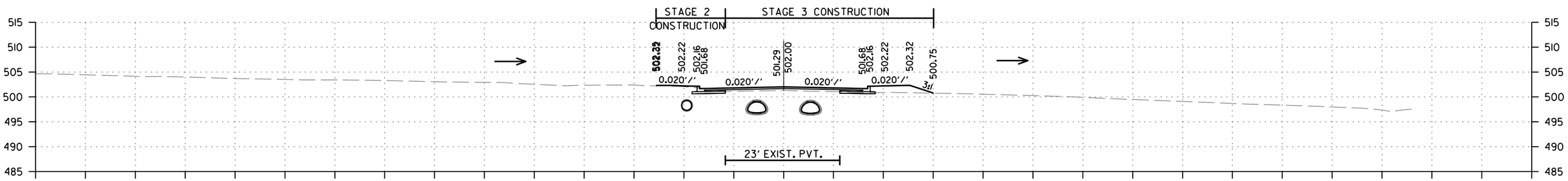

CUT AREA	5.13 SQ. FT.	CUT AREA	1.45 SQ. FT.	CUT AREA	0 SQ. FT.	CUT VOLUME	2 CU. YD.	CUT VOLUME	1 CU. YD.	CUT VOLUME	0 CU. YD.
FILL AREA	1.07 SQ. FT.	FILL AREA	14.2 SQ. FT.	FILL AREA	0 SQ. FT.	FILL VOLUME	7 CU. YD.	FILL VOLUME	8 CU. YD.	FILL VOLUME	0 CU. YD.

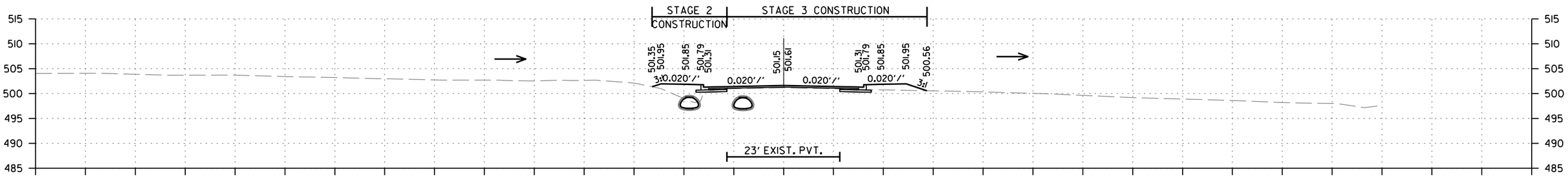

CUT AREA	2.14 SQ. FT.	CUT AREA	2.96 SQ. FT.	CUT AREA	0 SQ. FT.	CUT VOLUME	0 CU. YD.	CUT VOLUME	1 CU. YD.	CUT VOLUME	0 CU. YD.
FILL AREA	21.26 SQ. FT.	FILL AREA	11.96 SQ. FT.	FILL AREA	0 SQ. FT.	FILL VOLUME	5 CU. YD.	FILL VOLUME	2 CU. YD.	FILL VOLUME	0 CU. YD.

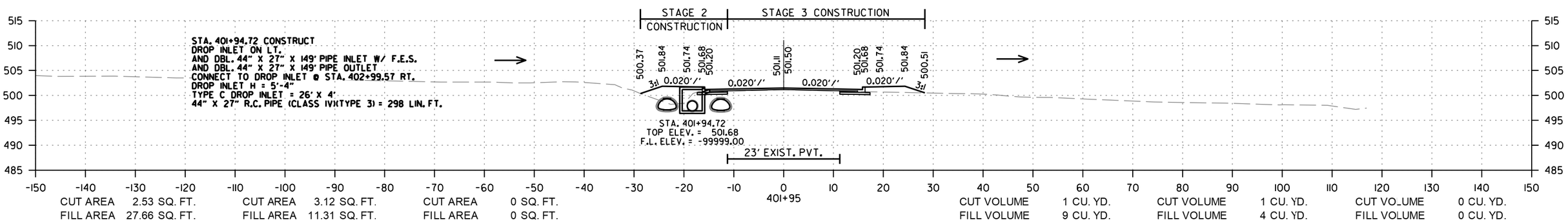

CUT AREA	2.53 SQ. FT.	CUT AREA	3.12 SQ. FT.	CUT AREA	0 SQ. FT.	CUT VOLUME	1 CU. YD.	CUT VOLUME	1 CU. YD.	CUT VOLUME	0 CU. YD.
FILL AREA	27.66 SQ. FT.	FILL AREA	11.31 SQ. FT.	FILL AREA	0 SQ. FT.	FILL VOLUME	9 CU. YD.	FILL VOLUME	4 CU. YD.	FILL VOLUME	0 CU. YD.

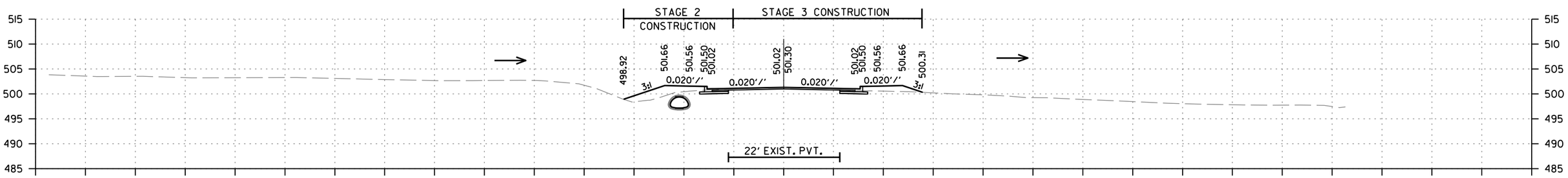

CUT AREA	4.13 SQ. FT.	CUT AREA	3.26 SQ. FT.	CUT AREA	0 SQ. FT.	CUT VOLUME	9 CU. YD.	CUT VOLUME	8 CU. YD.	CUT VOLUME	0 CU. YD.
FILL AREA	21.85 SQ. FT.	FILL AREA	10.52 SQ. FT.	FILL AREA	0 SQ. FT.	FILL VOLUME	37 CU. YD.	FILL VOLUME	30 CU. YD.	FILL VOLUME	0 CU. YD.

S. COKER ST.
STA. 401+85 TO STA. 402+16

rb43088 9/21/2023
R040861.DGN

DATE REVISED	DATE REVISED	FED.RD. DIST.NO.	STATE	JOB NO.	SHEET NO.	TOTAL SHEETS
		6	ARK.	040861	278	291
		CROSS SECTIONS				

STAGE 2 STAGE 3 UNDERCUT STAGE 2 STAGE 3 UNDERCUT

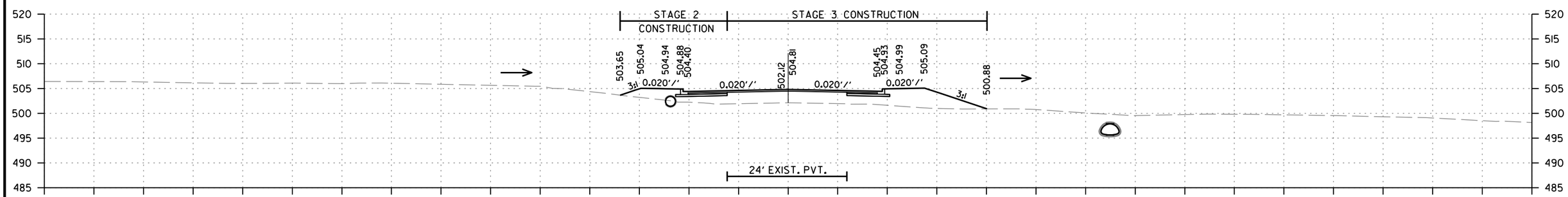

CUT AREA 0 SQ. FT. CUT AREA 0 SQ. FT. CUT AREA 0 SQ. FT. CUT VOLUME 0 CU. YD. CUT VOLUME 0 CU. YD. CUT VOLUME 0 CU. YD.
FILL AREA 34.78 SQ. FT. FILL AREA 67.58 SQ. FT. FILL AREA 0 SQ. FT. FILL VOLUME 30 CU. YD. FILL VOLUME 61 CU. YD. FILL VOLUME 0 CU. YD.

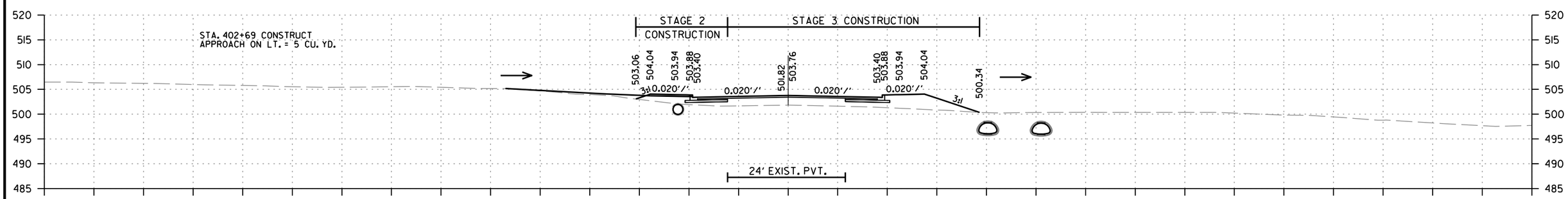

CUT AREA 0 SQ. FT. CUT AREA 0 SQ. FT. CUT AREA 0 SQ. FT. CUT VOLUME 4 CU. YD. CUT VOLUME 1 CU. YD. CUT VOLUME 0 CU. YD.
FILL AREA 20.41 SQ. FT. FILL AREA 46.74 SQ. FT. FILL AREA 0 SQ. FT. FILL VOLUME 21 CU. YD. FILL VOLUME 57 CU. YD. FILL VOLUME 0 CU. YD.

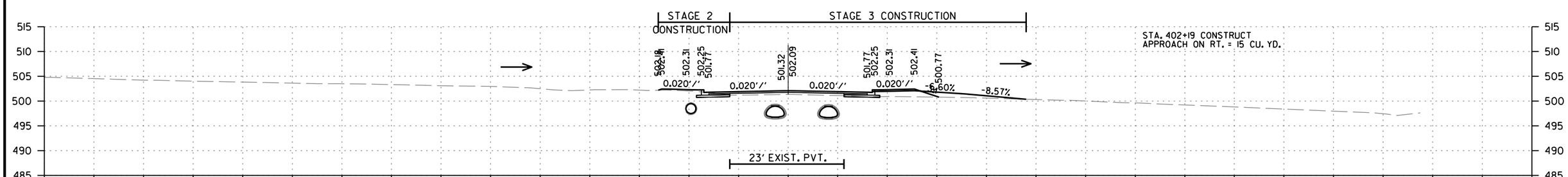

CUT AREA 4.8 SQ. FT. CUT AREA 0.95 SQ. FT. CUT AREA 0 SQ. FT. CUT VOLUME 1 CU. YD. CUT VOLUME 0 CU. YD. CUT VOLUME 0 CU. YD.
FILL AREA 2.06 SQ. FT. FILL AREA 15.17 SQ. FT. FILL AREA 0 SQ. FT. FILL VOLUME 0 CU. YD. FILL VOLUME 2 CU. YD. FILL VOLUME 0 CU. YD.

S. COKER ST.
STA. 402+19 TO STA. 402+98

rb43088 9/21/2023
R040861.DGN

DATE REVISED	DATE REVISED	FED.RD. DIST.NO.	STATE	JOB NO.	SHEET NO.	TOTAL SHEETS
		6	ARK.	040861	279	291
		CROSS SECTIONS				

STAGE 2 | STAGE 3 | UNDERCUT | STAGE 2 | STAGE 3 | UNDERCUT

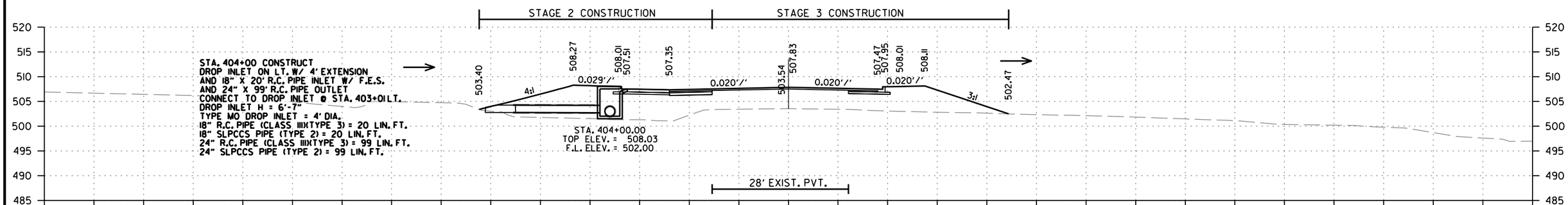

CUT AREA	0 SQ. FT.	CUT AREA	0 SQ. FT.	CUT AREA	0 SQ. FT.	CUT VOLUME	0 CU. YD.	CUT VOLUME	0 CU. YD.	CUT VOLUME	0 CU. YD.
FILL AREA	218.8 SQ. FT.	FILL AREA	108.1 SQ. FT.	FILL AREA	0 SQ. FT.	FILL VOLUME	469 CU. YD.	FILL VOLUME	325 CU. YD.	FILL VOLUME	0 CU. YD.

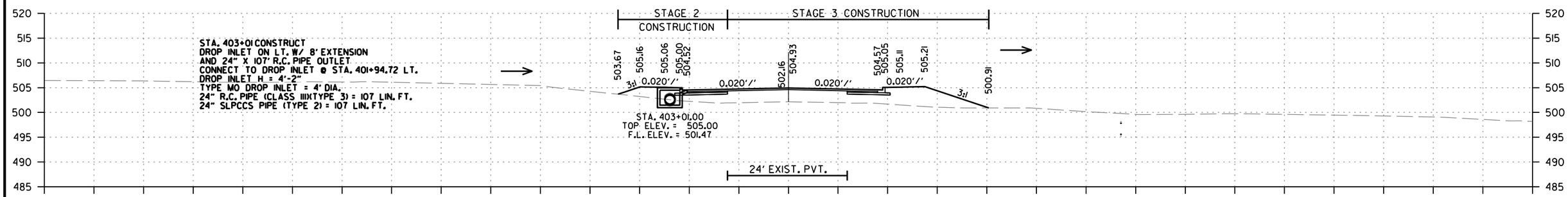

CUT AREA	0 SQ. FT.	CUT AREA	0 SQ. FT.	CUT AREA	0 SQ. FT.	CUT VOLUME	0 CU. YD.	CUT VOLUME	0 CU. YD.	CUT VOLUME	0 CU. YD.
FILL AREA	36.96 SQ. FT.	FILL AREA	69.35 SQ. FT.	FILL AREA	0 SQ. FT.	FILL VOLUME	1 CU. YD.	FILL VOLUME	3 CU. YD.	FILL VOLUME	0 CU. YD.

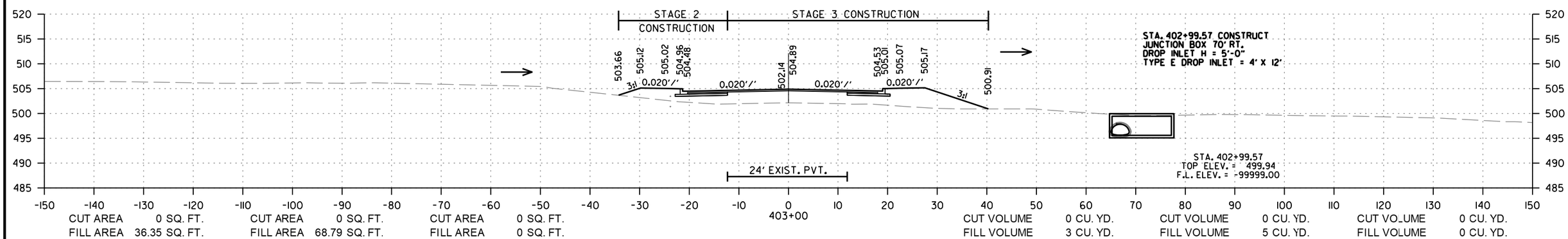

CUT AREA	0 SQ. FT.	CUT AREA	0 SQ. FT.	CUT AREA	0 SQ. FT.	CUT VOLUME	0 CU. YD.	CUT VOLUME	0 CU. YD.	CUT VOLUME	0 CU. YD.
FILL AREA	36.35 SQ. FT.	FILL AREA	68.79 SQ. FT.	FILL AREA	0 SQ. FT.	FILL VOLUME	3 CU. YD.	FILL VOLUME	5 CU. YD.	FILL VOLUME	0 CU. YD.

S. COKER ST.
STA. 403+00 TO STA. 404+00

rb43088 9/21/2023
R040861.DGN

DATE REVISED	DATE REVISED	FED.RD. DIST.NO.	STATE	JOB NO.	SHEET NO.	TOTAL SHEETS
		6	ARK.	040861	280	291
		CROSS SECTIONS				

STAGE 2 | STAGE 3 | UNDERCUT | STAGE 2 | STAGE 3 | UNDERCUT

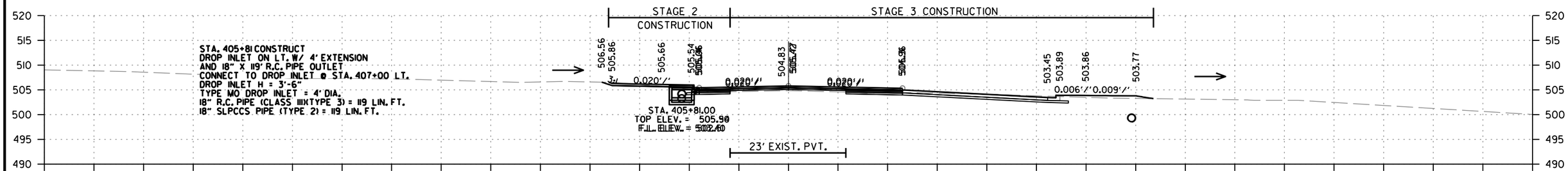

CUT AREA	9.48 SQ. FT.	CUT AREA	33.28 SQ. FT.	CUT AREA	0 SQ. FT.	CUT VOLUME	14 CU. YD.	CUT VOLUME	50 CU. YD.	CUT VOLUME	0 CU. YD.
FILL AREA	1.13 SQ. FT.	FILL AREA	8.55 SQ. FT.	FILL AREA	0 SQ. FT.	FILL VOLUME	2 CU. YD.	FILL VOLUME	13 CU. YD.	FILL VOLUME	0 CU. YD.

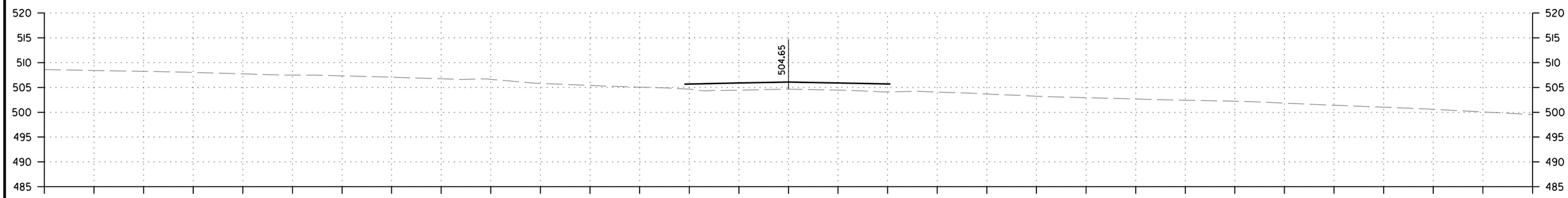

CUT AREA	0 SQ. FT.	CUT AREA	0 SQ. FT.	CUT AREA	0 SQ. FT.	CUT VOLUME	0 CU. YD.	CUT VOLUME	0 CU. YD.	CUT VOLUME	0 CU. YD.
FILL AREA	0 SQ. FT.	FILL AREA	0 SQ. FT.	FILL AREA	0 SQ. FT.	FILL VOLUME	321 CU. YD.	FILL VOLUME	123 CU. YD.	FILL VOLUME	0 CU. YD.

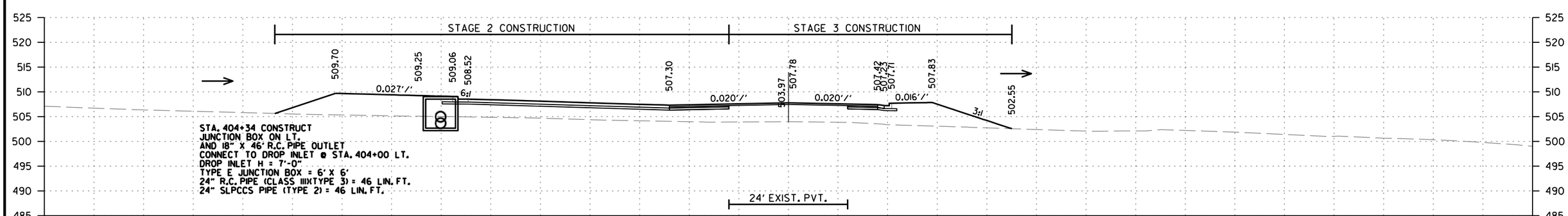

CUT AREA	0 SQ. FT.	CUT AREA	0 SQ. FT.	CUT AREA	0 SQ. FT.	CUT VOLUME	0 CU. YD.	CUT VOLUME	0 CU. YD.	CUT VOLUME	0 CU. YD.
FILL AREA	262.5 SQ. FT.	FILL AREA	101 SQ. FT.	FILL AREA	0 SQ. FT.	FILL VOLUME	303 CU. YD.	FILL VOLUME	132 CU. YD.	FILL VOLUME	0 CU. YD.

S. COKER ST.
STA. 404+34 TO STA. 405+81

9/21/2023
rb43088
R040861.DGN

DATE REVISED	DATE REVISED	FED.RD. DIST.NO.	STATE	JOB NO.	SHEET NO.	TOTAL SHEETS
		6	ARK.	040861	281	291
		CROSS SECTIONS				

STAGE 2 | STAGE 3 | UNDERCUT | STAGE 2 | STAGE 3 | UNDERCUT

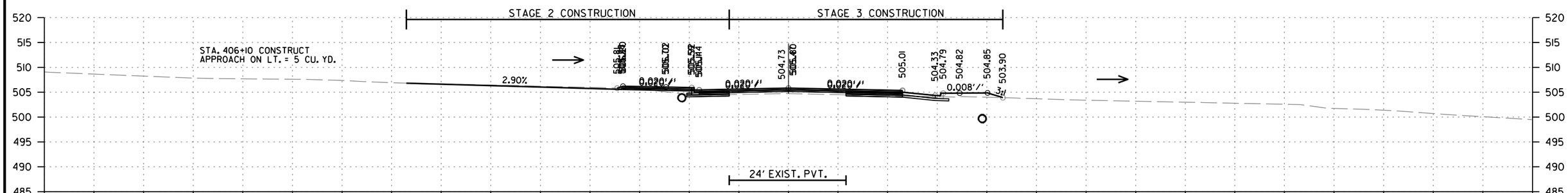

CUT AREA 2.65 SQ. FT. | CUT AREA 5.49 SQ. FT. | CUT AREA 0 SQ. FT. | CUT VOLUME 1 CU. YD. | CUT VOLUME 3 CU. YD. | CUT VOLUME 0 CU. YD.
FILL AREA 8.11 SQ. FT. | FILL AREA 8.93 SQ. FT. | FILL AREA 0 SQ. FT. | FILL VOLUME 4 CU. YD. | FILL VOLUME 3 CU. YD. | FILL VOLUME 0 CU. YD.

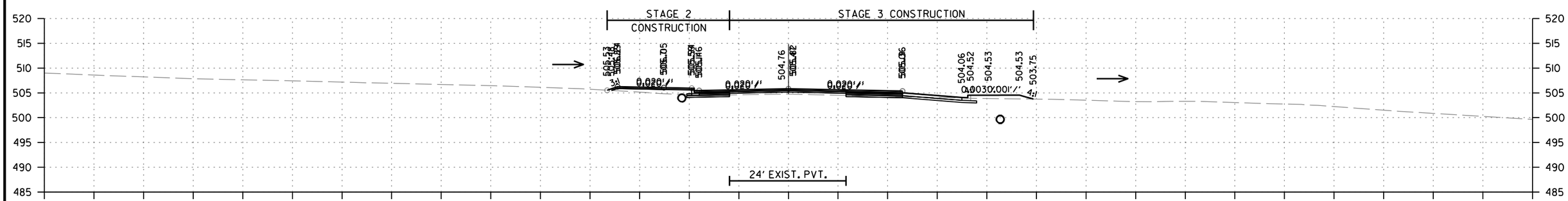

CUT AREA 3 SQ. FT. | CUT AREA 9.12 SQ. FT. | CUT AREA 0 SQ. FT. | CUT VOLUME 1 CU. YD. | CUT VOLUME 2 CU. YD. | CUT VOLUME 0 CU. YD.
FILL AREA 12.67 SQ. FT. | FILL AREA 8.28 SQ. FT. | FILL AREA 0 SQ. FT. | FILL VOLUME 2 CU. YD. | FILL VOLUME 2 CU. YD. | FILL VOLUME 0 CU. YD.

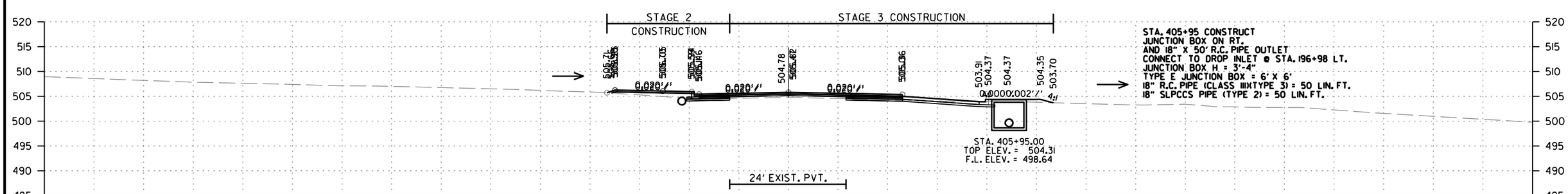

CUT AREA 3.32 SQ. FT. | CUT AREA 12.21 SQ. FT. | CUT AREA 0 SQ. FT. | CUT VOLUME 3 CU. YD. | CUT VOLUME 12 CU. YD. | CUT VOLUME 0 CU. YD.
FILL AREA 10.14 SQ. FT. | FILL AREA 10.01 SQ. FT. | FILL AREA 0 SQ. FT. | FILL VOLUME 3 CU. YD. | FILL VOLUME 5 CU. YD. | FILL VOLUME 0 CU. YD.

S. COKER ST.
STA. 405+95 TO STA. 406+10

rb43088 9/21/2023
R040861.DGN

DATE REVISED	DATE REVISED	FED.RD. DIST.NO.	STATE	JOB NO.	SHEET NO.	TOTAL SHEETS
		6	ARK.	040861	282	291
		CROSS SECTIONS				

STAGE 2 STAGE 3 UNDERCUT STAGE 2 STAGE 3 UNDERCUT

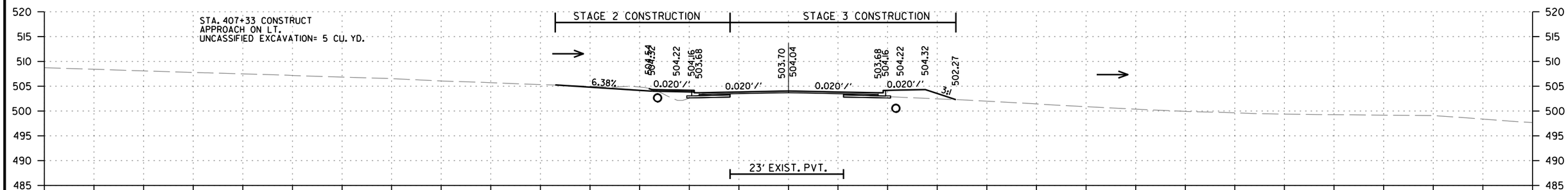

CUT AREA 4.66 SQ. FT. CUT AREA 3.58 SQ. FT. CUT AREA 0 SQ. FT. CUT VOLUME 4 CU. YD. CUT VOLUME 3 CU. YD. CUT VO_UME 0 CU. YD.
FILL AREA 9.9 SQ. FT. FILL AREA 17.31 SQ. FT. FILL AREA 0 SQ. FT. FILL VOLUME 12 CU. YD. FILL VOLUME 25 CU. YD. FILL VOLUME 0 CU. YD.

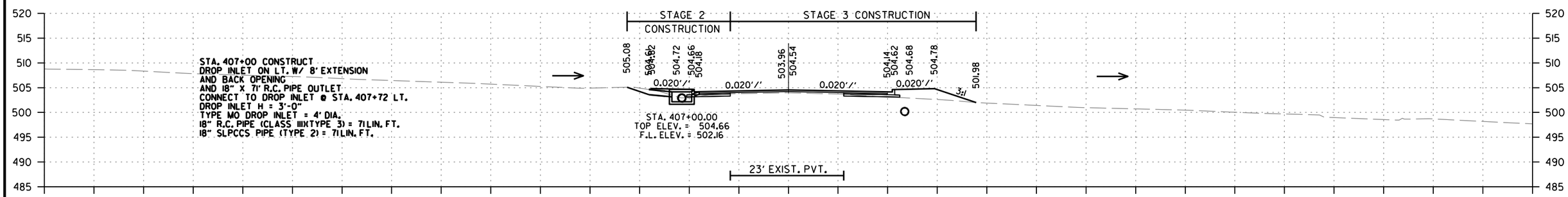

CUT AREA 2.23 SQ. FT. CUT AREA 1.25 SQ. FT. CUT AREA 0 SQ. FT. CUT VOLUME 3 CU. YD. CUT VOLUME 2 CU. YD. CUT VO_UME 0 CU. YD.
FILL AREA 9.25 SQ. FT. FILL AREA 23.42 SQ. FT. FILL AREA 0 SQ. FT. FILL VOLUME 17 CU. YD. FILL VOLUME 40 CU. YD. FILL VOLUME 0 CU. YD.

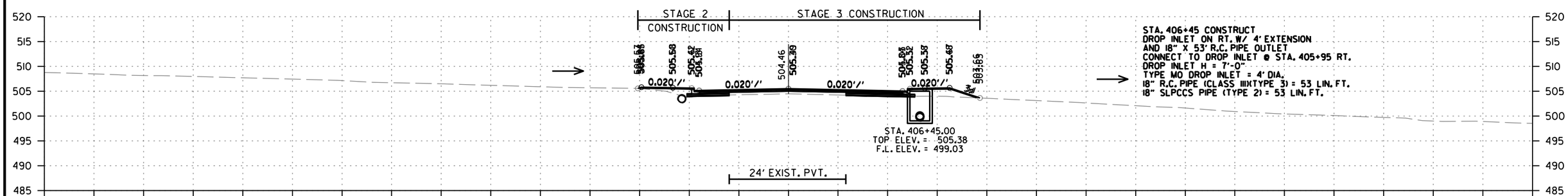

CUT AREA 0.72 SQ. FT. CUT AREA 0.7 SQ. FT. CUT AREA 0 SQ. FT. CUT VOLUME 2 CU. YD. CUT VOLUME 4 CU. YD. CUT VO_UME 0 CU. YD.
FILL AREA 7.68 SQ. FT. FILL AREA 15.74 SQ. FT. FILL AREA 0 SQ. FT. FILL VOLUME 10 CU. YD. FILL VOLUME 16 CU. YD. FILL VOLUME 0 CU. YD.

S. COKER ST.
STA. 406+45 TO STA. 407+33

rb43088 9/21/2023
R040861.DGN

DATE REVISED	DATE REVISED	FED.RD. DIST.NO.	STATE	JOB NO.	SHEET NO.	TOTAL SHEETS
		6	ARK.	040861	283	291
		CROSS SECTIONS				

STAGE 2 | STAGE 3 | UNDERCUT | STAGE 2 | STAGE 3 | UNDERCUT

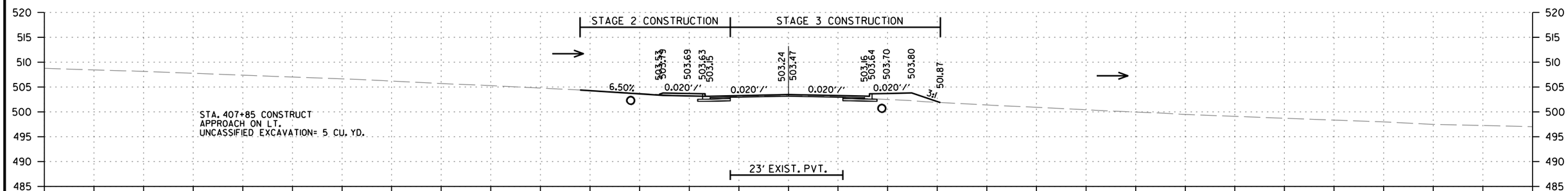

CUT AREA 5.58 SQ. FT. | CUT AREA 4.1 SQ. FT. | CUT AREA 0 SQ. FT. | CUT VOLUME 3 CU. YD. | CUT VOLUME 2 CU. YD. | CUT VOLUME 0 CU. YD.
FILL AREA 3.67 SQ. FT. | FILL AREA 14.85 SQ. FT. | FILL AREA 0 SQ. FT. | FILL VOLUME 5 CU. YD. | FILL VOLUME 8 CU. YD. | FILL VOLUME 0 CU. YD.

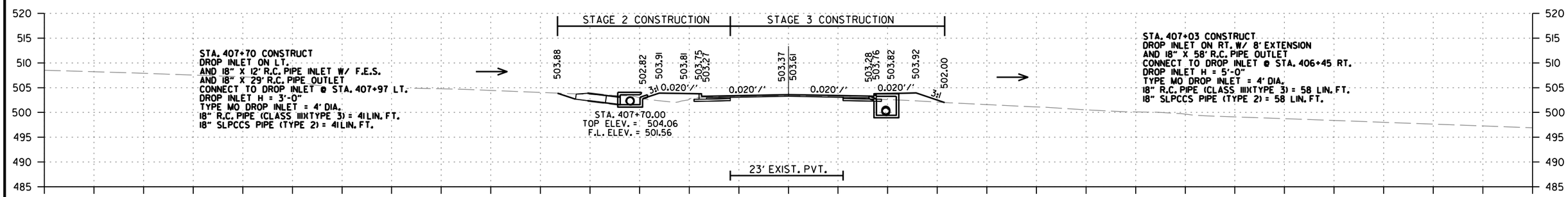

CUT AREA 5.47 SQ. FT. | CUT AREA 4.37 SQ. FT. | CUT AREA 0 SQ. FT. | CUT VOLUME 7 CU. YD. | CUT VOLUME 5 CU. YD. | CUT VOLUME 0 CU. YD.
FILL AREA 14.06 SQ. FT. | FILL AREA 15.18 SQ. FT. | FILL AREA 0 SQ. FT. | FILL VOLUME 16 CU. YD. | FILL VOLUME 21 CU. YD. | FILL VOLUME 0 CU. YD.

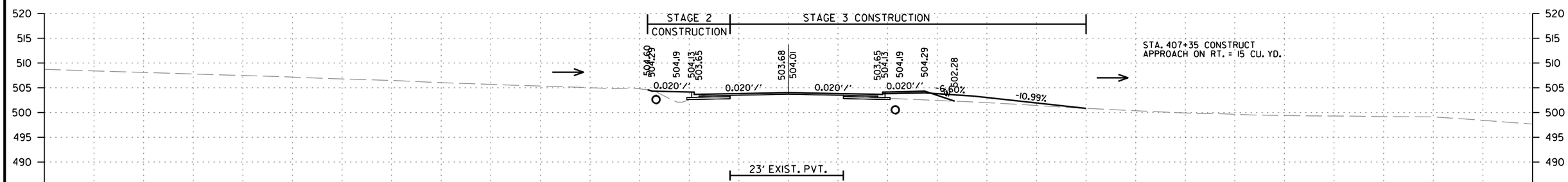

CUT AREA 4.96 SQ. FT. | CUT AREA 3.6 SQ. FT. | CUT AREA 0 SQ. FT. | CUT VOLUME 0 CU. YD. | CUT VOLUME 0 CU. YD. | CUT VOLUME 0 CU. YD.
FILL AREA 9.9 SQ. FT. | FILL AREA 17.17 SQ. FT. | FILL AREA 0 SQ. FT. | FILL VOLUME 1 CU. YD. | FILL VOLUME 1 CU. YD. | FILL VOLUME 0 CU. YD.

S. COKER ST.
STA. 407+35 TO STA. 407+85

rb43088 9/21/2023
R040861.DGN

DATE REVISED	DATE REVISED	FED.RD. DIST.NO.	STATE	JOB NO.	SHEET NO.	TOTAL SHEETS
		6	ARK.	040861	284	291
		CROSS SECTIONS				

STAGE 2 | STAGE 3 | UNDERCUT | STAGE 2 | STAGE 3 | UNDERCUT

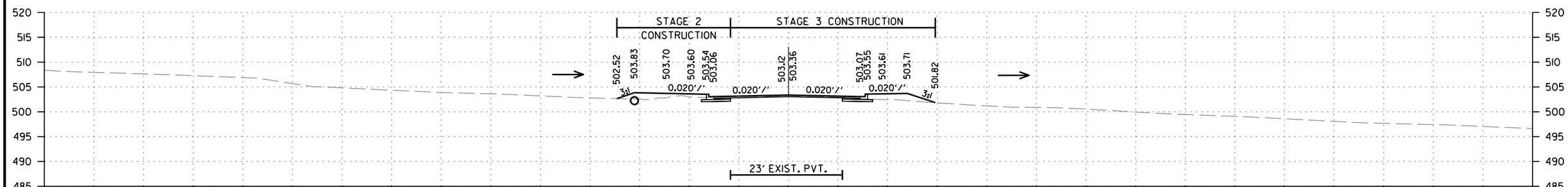

CUT AREA 4.72 SQ. FT. | CUT AREA 3.66 SQ. FT. | CUT AREA 0 SQ. FT.
FILL AREA 14.49 SQ. FT. | FILL AREA 13.69 SQ. FT. | FILL AREA 0 SQ. FT.

CUT VOLUME 1 CU. YD. | CUT VOLUME 0 CU. YD. | CUT VO_UME 0 CU. YD.
FILL VOLUME 1 CU. YD. | FILL VOLUME 2 CU. YD. | FILL VOLUME 0 CU. YD.

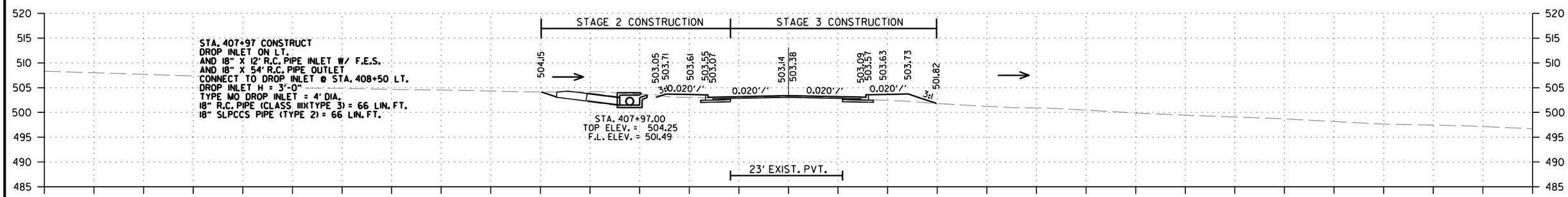

CUT AREA 4.86 SQ. FT. | CUT AREA 3.76 SQ. FT. | CUT AREA 0 SQ. FT.
FILL AREA 4.91 SQ. FT. | FILL AREA 14.1 SQ. FT. | FILL AREA 0 SQ. FT.

CUT VOLUME 1 CU. YD. | CUT VOLUME 1 CU. YD. | CUT VO_UME 0 CU. YD.
FILL VOLUME 1 CU. YD. | FILL VOLUME 4 CU. YD. | FILL VOLUME 0 CU. YD.

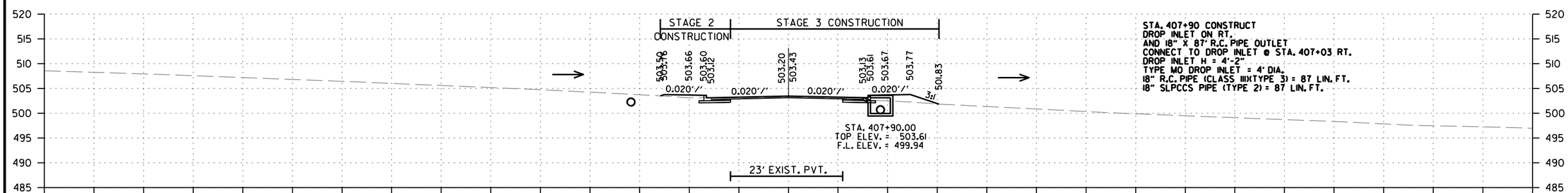

CUT AREA 5.44 SQ. FT. | CUT AREA 3.97 SQ. FT. | CUT AREA 0 SQ. FT.
FILL AREA 3.82 SQ. FT. | FILL AREA 14.5 SQ. FT. | FILL AREA 0 SQ. FT.

CUT VOLUME 1 CU. YD. | CUT VOLUME 1 CU. YD. | CUT VO_UME 0 CU. YD.
FILL VOLUME 1 CU. YD. | FILL VOLUME 3 CU. YD. | FILL VOLUME 0 CU. YD.

S. COKER ST.
STA. 407+90 TO STA. 408+00

rb43088 9/21/2023
R040861.DGN

DATE REVISED	DATE REVISED	FED.RD. DIST.NO.	STATE	JOB NO.	SHEET NO.	TOTAL SHEETS
		6	ARK.	040861	285	291
		CROSS SECTIONS				

STAGE 2 | STAGE 3 | UNDERCUT | STAGE 2 | STAGE 3 | UNDERCUT

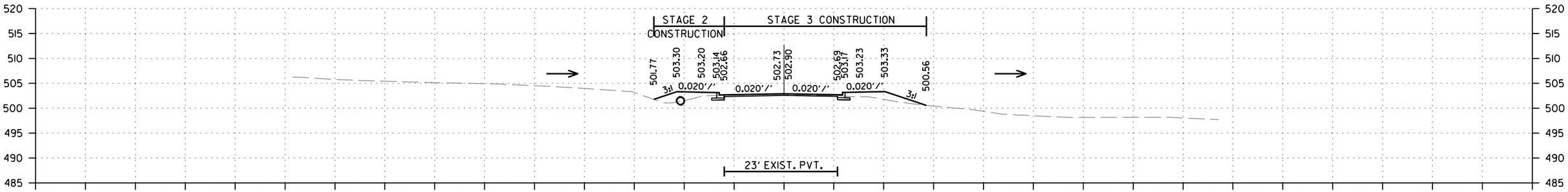

CUT AREA 1.8 SQ. FT. FILL AREA 15.32 SQ. FT.
CUT AREA 1.63 SQ. FT. FILL AREA 15.43 SQ. FT.
CUT AREA 0 SQ. FT. FILL AREA 0 SQ. FT.
408+63
END S. COKER ST.
BEGIN 100' TRANSITION
CUT VOLUME 0 CU. YD. FILL VOLUME 0 CU. YD.
CUT VOLUME 1 CU. YD. FILL VOLUME 8 CU. YD.
CUT VOLUME 0 CU. YD. FILL VOLUME 0 CU. YD.

STA. 408+50 CONSTRUCT
DROP INLET ON LT.
AND BACK OPENING
AND 18" X 15' R.C. PIPE OUTLET W/ F.E.S.
DROP INLET H = 3'-2"
TYPE MO DROP INLET = 4' DIA.
18" R.C. PIPE (CLASS III(TYPE 3) = 41 LIN. FT.
18" SLPCCS PIPE (TYPE 2) = 41 LIN. FT.

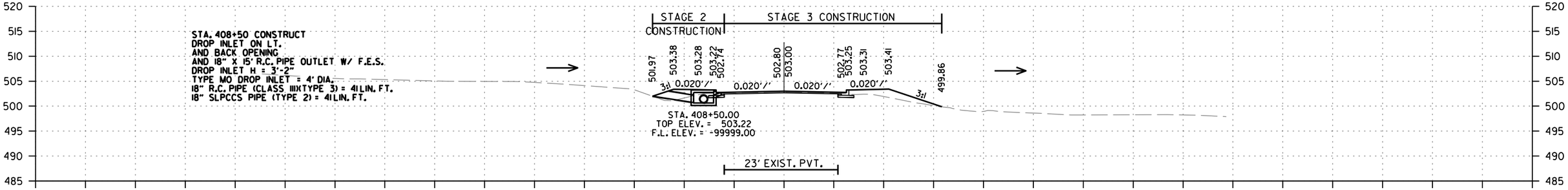

CUT AREA 2.32 SQ. FT. FILL AREA 15.86 SQ. FT.
CUT AREA 2.05 SQ. FT. FILL AREA 18.21 SQ. FT.
CUT AREA 0 SQ. FT. FILL AREA 0 SQ. FT.
408+50
CUT VOLUME 3 CU. YD. FILL VOLUME 15 CU. YD.
CUT VOLUME 2 CU. YD. FILL VOLUME 17 CU. YD.
CUT VOLUME 0 CU. YD. FILL VOLUME 0 CU. YD.

STA. 408+25 CONSTRUCT
APPROACH ON RT. = 55 CU. YD.

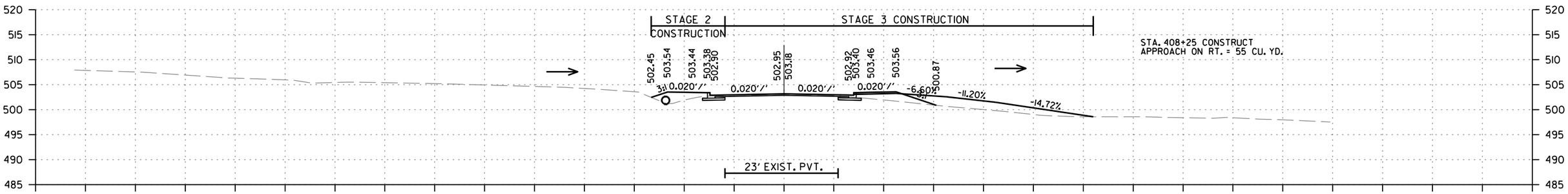

CUT AREA 3.44 SQ. FT. FILL AREA 15.71 SQ. FT.
CUT AREA 2.86 SQ. FT. FILL AREA 18.78 SQ. FT.
CUT AREA 0 SQ. FT. FILL AREA 0 SQ. FT.
408+25
CUT VOLUME 4 CU. YD. FILL VOLUME 14 CU. YD.
CUT VOLUME 3 CU. YD. FILL VOLUME 15 CU. YD.
CUT VOLUME 0 CU. YD. FILL VOLUME 0 CU. YD.

S. COKER ST.
STA. 408+25 TO STA. 408+63

rb43088 9/21/2023
R040861.DGN

DATE REVISED	DATE REVISED	FED.RD. DIST.NO.	STATE	JOB NO.	SHEET NO.	TOTAL SHEETS
		6	ARK.	040861	286	291
		CROSS SECTIONS				

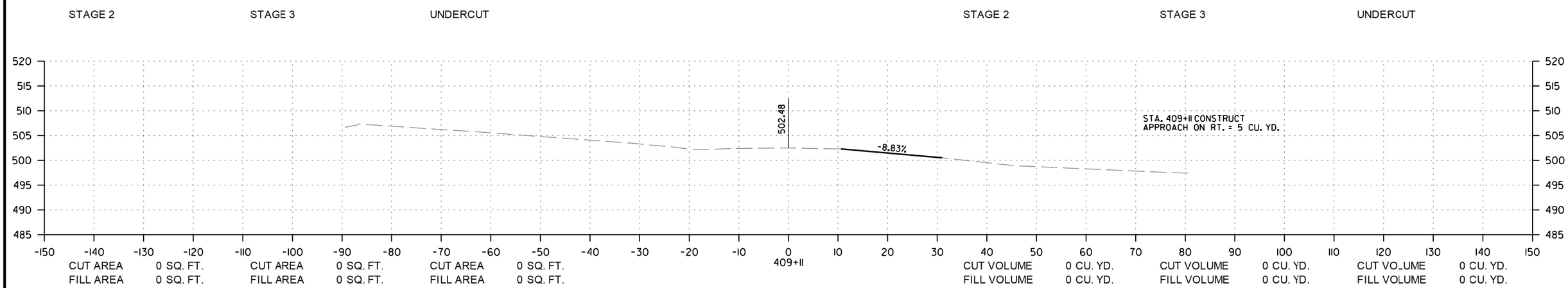

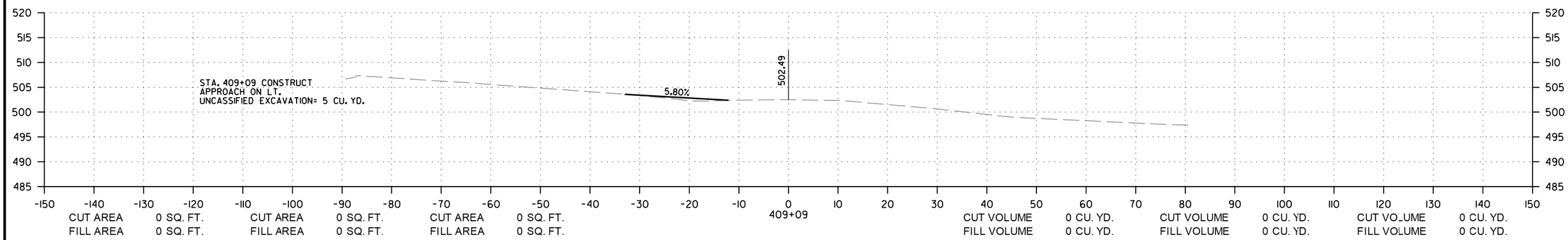

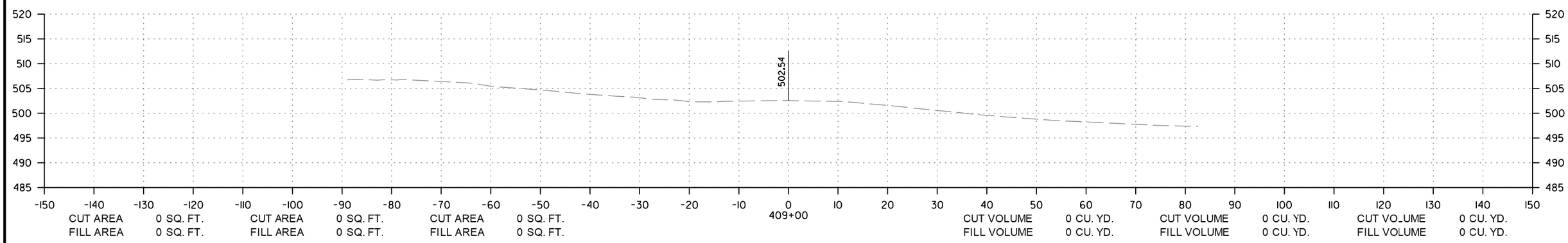

S. COKER ST.
STA. 409+00 TO STA. 409+11

rb43088 9/21/2023
R040861.DGN

DATE REVISED	DATE REVISED	FED.RD. DIST.NO.	STATE	JOB NO.	SHEET NO.	TOTAL SHEETS
		6	ARK.	040861	287	291
		CROSS SECTIONS				

STAGE 2 STAGE 3 UNDERCUT STAGE 2 STAGE 3 UNDERCUT

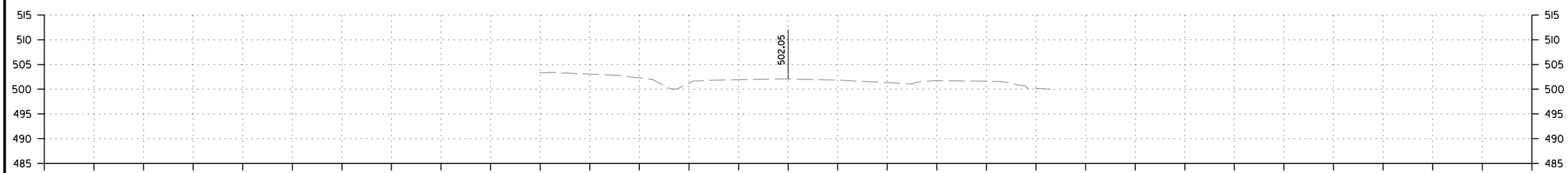

CUT AREA	0 SQ. FT.	CUT AREA	0 SQ. FT.	CUT AREA	0 SQ. FT.	CUT VOLUME	0 CU. YD.	CUT VOLUME	0 CU. YD.	CUT VOLUME	0 CU. YD.
FILL AREA	0 SQ. FT.	FILL AREA	0 SQ. FT.	FILL AREA	0 SQ. FT.	FILL VOLUME	0 CU. YD.	FILL VOLUME	0 CU. YD.	FILL VOLUME	0 CU. YD.

CUT AREA	0 SQ. FT.	CUT AREA	0 SQ. FT.	CUT AREA	0 SQ. FT.	CUT VOLUME	0 CU. YD.	CUT VOLUME	0 CU. YD.	CUT VOLUME	0 CU. YD.
FILL AREA	0 SQ. FT.	FILL AREA	0 SQ. FT.	FILL AREA	0 SQ. FT.	FILL VOLUME	0 CU. YD.	FILL VOLUME	0 CU. YD.	FILL VOLUME	0 CU. YD.

S. COKER ST.
STA. 409+63 TO STA. 410+00

rb43088 9/21/2023
R040861.DGN

DATE REVISED	DATE REVISED	FED.RD. DIST.NO.	STATE	JOB NO.	SHEET NO.	TOTAL SHEETS
		6	ARK.	040861	287	291
		CROSS SECTIONS				

STAGE 1

STAGE 1

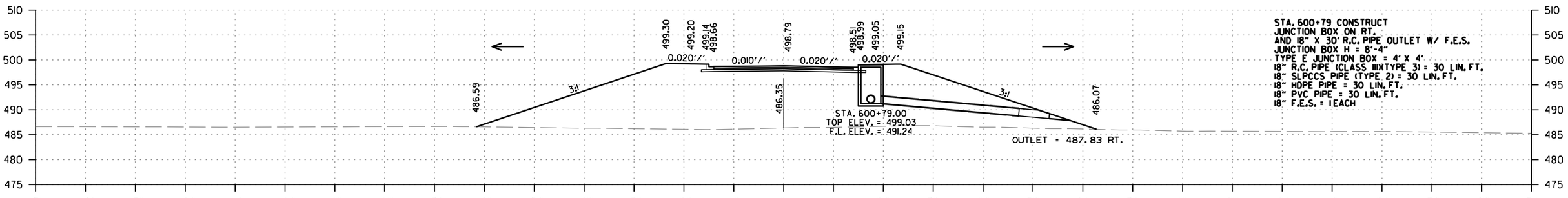

CUT AREA 0 SQ. FT.
FILL AREA 1049 SQ. FT.

600+79
600+60.10 BEGIN SUPERELEVATION

CUT VOLUME 0 CU. YD.
FILL VOLUME 991 CU. YD.

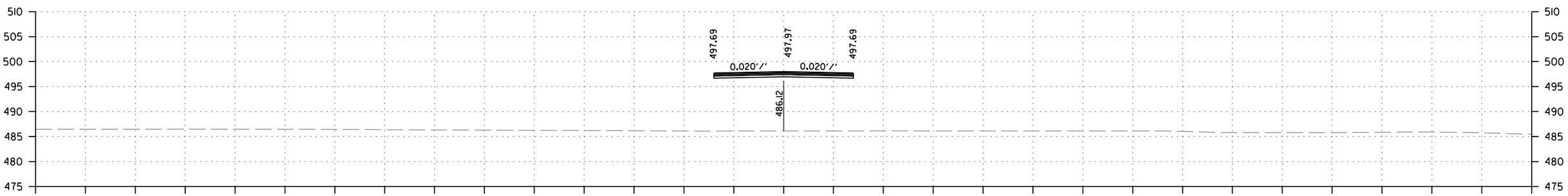

CUT AREA 0 SQ. FT.
FILL AREA 0 SQ. FT.

600+28
BEGIN MAIN ST.

CUT VOLUME 0 CU. YD.
FILL VOLUME 0 CU. YD.

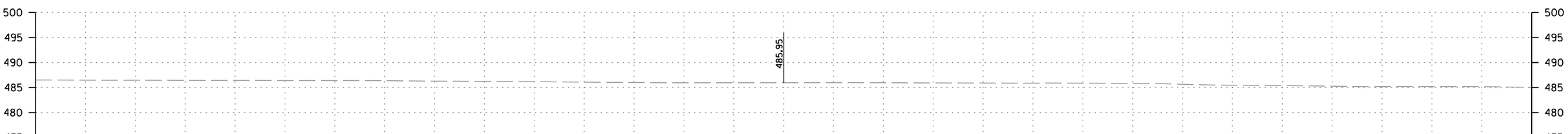

CUT AREA 0 SQ. FT.
FILL AREA 0 SQ. FT.

600+00

CUT VOLUME 0 CU. YD.
FILL VOLUME 0 CU. YD.

MAIN ST.
STA. 600+00 TO STA. 600+79

rb43088 9/21/2023
R040861.DGN

DATE REVISED	DATE REVISED	FED.RD. DIST.NO.	STATE	JOB NO.	SHEET NO.	TOTAL SHEETS
		6	ARK.	040861	288	291
		CROSS SECTIONS				

STAGE 1

STAGE 1

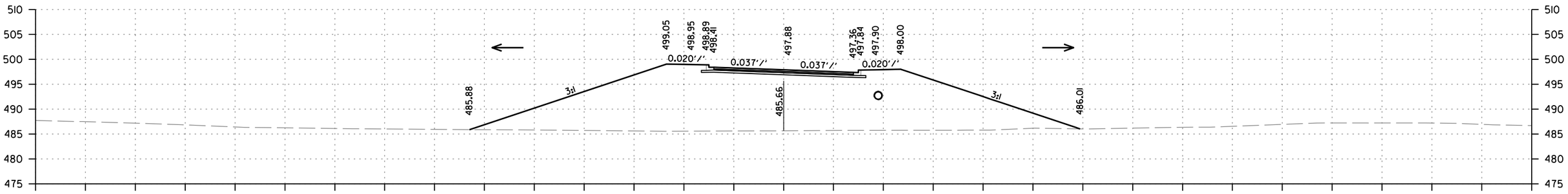

CUT AREA 0 SQ. FT.
FILL AREA 1039 SQ. FT.

602+00

CUT VOLUME 0 CU. YD.
FILL VOLUME 548 CU. YD.

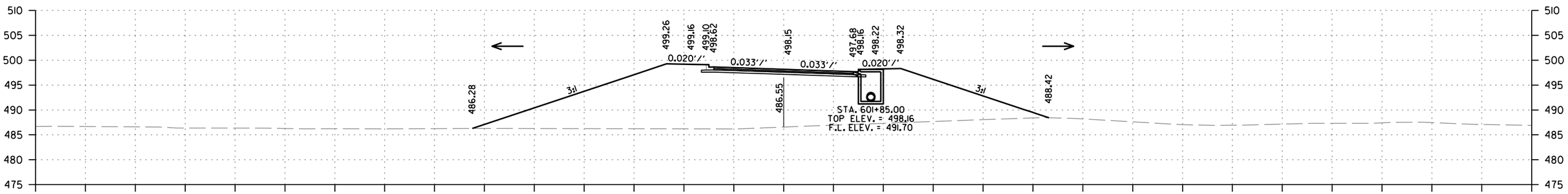

CUT AREA 0 SQ. FT.
FILL AREA 932.9 SQ. FT.

601+85

CUT VOLUME 0 CU. YD.
FILL VOLUME 3369 CU. YD.

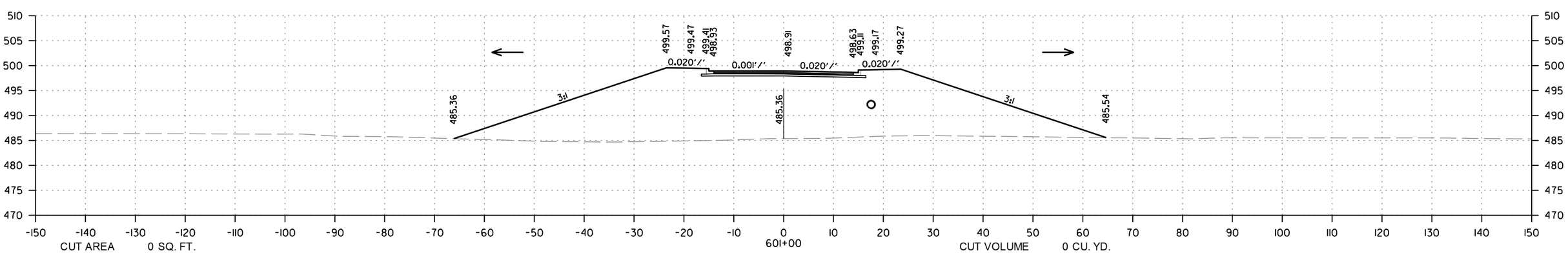

CUT AREA 0 SQ. FT.
FILL AREA 1207 SQ. FT.

601+00

CUT VOLUME 0 CU. YD.
FILL VOLUME 878 CU. YD.

MAIN ST.
STA. 601+00 TO STA. 602+00

rb43088 9/21/2023
R040861.DGN

DATE REVISED	DATE REVISED	FED.RD. DIST.NO.	STATE	JOB NO.	SHEET NO.	TOTAL SHEETS
		6	ARK.	040861	289	291
		CROSS SECTIONS				

STAGE 1

STAGE 1

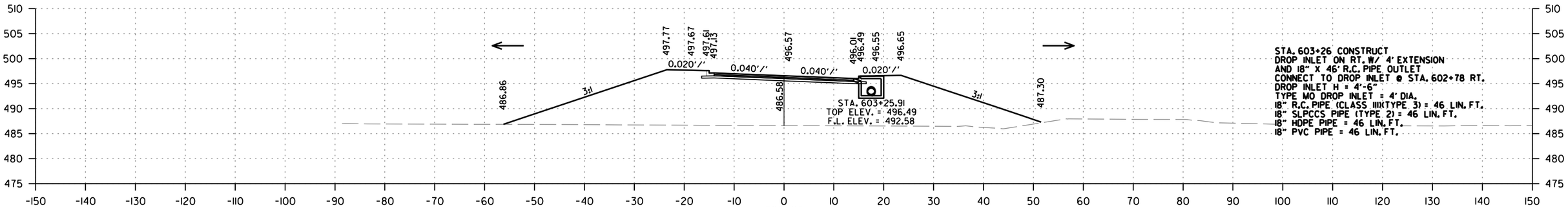

CUT AREA 0 SQ. FT.
FILL AREA 784.1 SQ. FT.

603+26

CUT VOLUME 0 CU. YD.
FILL VOLUME 753 CU. YD.

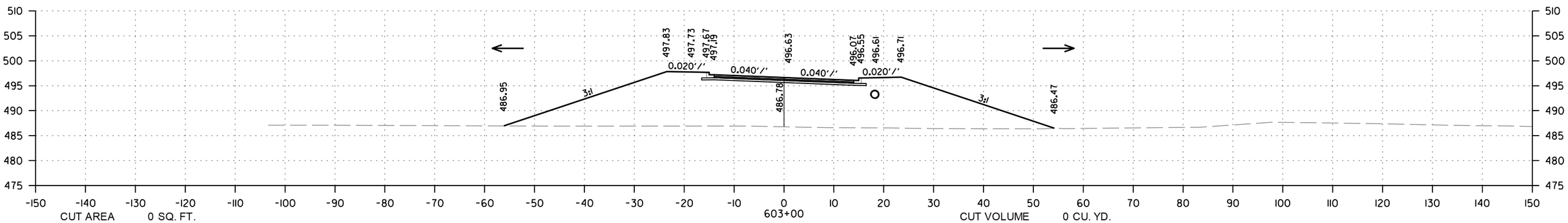

CUT AREA 0 SQ. FT.
FILL AREA 780.1 SQ. FT.

603+00

CUT VOLUME 0 CU. YD.
FILL VOLUME 644 CU. YD.

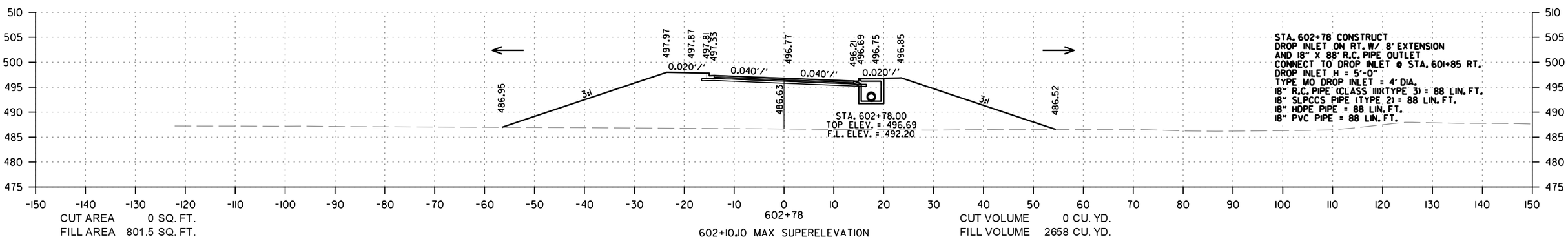

CUT AREA 0 SQ. FT.
FILL AREA 801.5 SQ. FT.

602+78

602+10.10 MAX SUPERELEVATION

CUT VOLUME 0 CU. YD.
FILL VOLUME 2658 CU. YD.

MAIN ST.
STA. 602+78 TO STA. 603+26

rb43088 9/21/2023
R040861.DGN

DATE REVISED	DATE REVISED	FED.RD. DIST.NO.	STATE	JOB NO.	SHEET NO.	TOTAL SHEETS
		6	ARK.	040861	290	291
		CROSS SECTIONS				

STAGE 1

STAGE 1

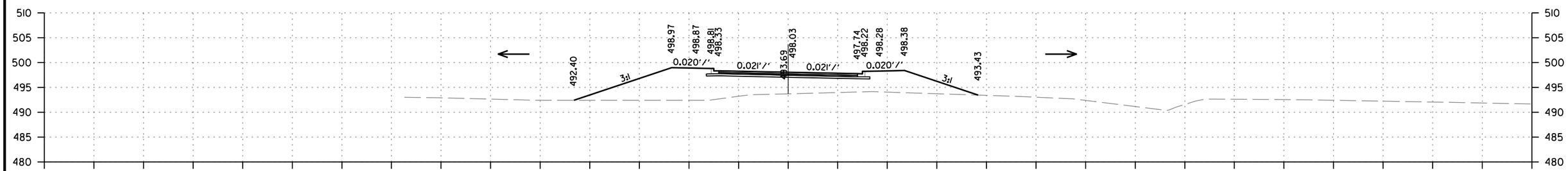

CUT AREA 0 SQ. FT.
FILL AREA 290.8 SQ. FT.

605+00

604+28.97 MAX SUPERELEVATION

CUT VOLUME 0 CU. YD.
FILL VOLUME 1869 CU. YD.

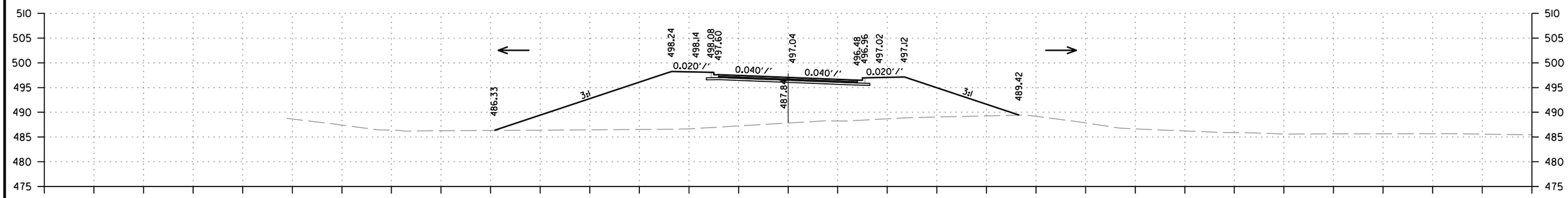

CUT AREA 0 SQ. FT.
FILL AREA 718.4 SQ. FT.

604+00

CUT VOLUME 0 CU. YD.
FILL VOLUME 0 CU. YD.

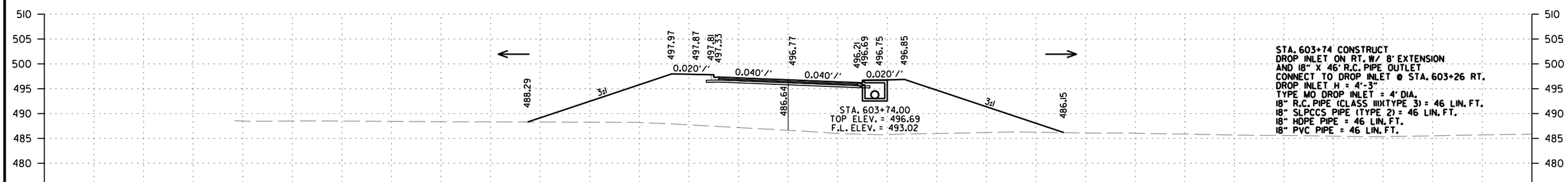

STA. 603+74 CONSTRUCT
DROP INLET ON RT. W/ 8' EXTENSION
AND 18" X 46' R.C. PIPE OUTLET
CONNECT TO DROP INLET @ STA. 603+26 RT.
DROP INLET H = 4'-3"
TYPE MO DROP INLET = 4' DIA.
18" R.C. PIPE (CLASS III)(TYPE 3) = 46 LIN. FT.
18" SLPCCS PIPE (TYPE 2) = 46 LIN. FT.
18" HDPE PIPE = 46 LIN. FT.
18" PVC PIPE = 46 LIN. FT.

CUT AREA 0 SQ. FT.
FILL AREA 769 SQ. FT.

603+74

CUT VOLUME 0 CU. YD.
FILL VOLUME 1381 CU. YD.

MAIN ST.
STA. 603+74 TO STA. 605+00

rb43088 9/21/2023
R040861.DGN

DATE REVISED	DATE REVISED	FED.RD. DIST.NO.	STATE	JOB NO.	SHEET NO.	TOTAL SHEETS
		6	ARK.	040861	291	291
		CROSS SECTIONS				

STAGE 1

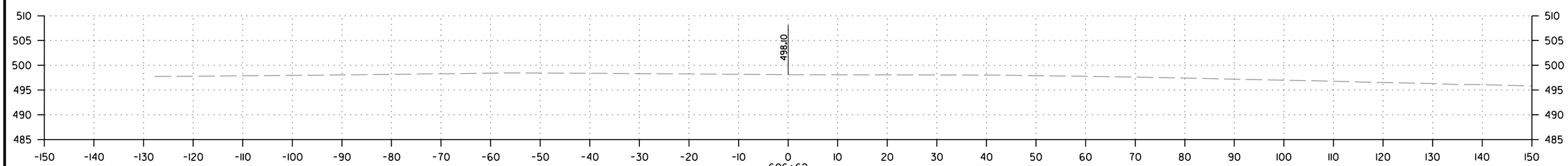

CUT AREA 0 SQ. FT.
FILL AREA 0 SQ. FT.

STAGE 1

CUT VOLUME 13 CU. YD.
FILL VOLUME 27 CU. YD.

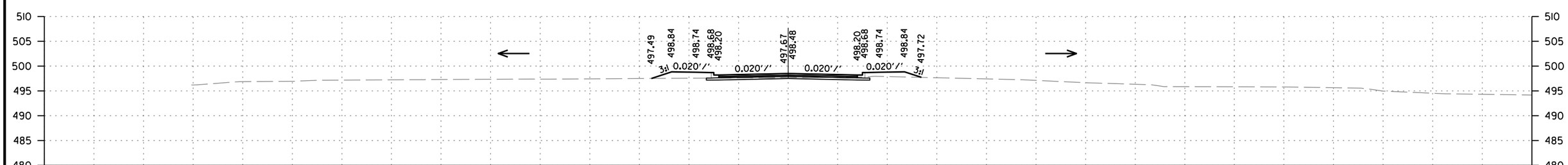

CUT AREA 11.23 SQ. FT.
FILL AREA 23.37 SQ. FT.

CUT VOLUME 21 CU. YD.
FILL VOLUME 582 CU. YD.

MAIN ST.
STA. 606+00 TO STA. 606+62

rb43088 9/21/2023
R040861.DGN

REFER TO TABULATION OF QUANTITIES FOR "W" & "B" DIMENSIONS

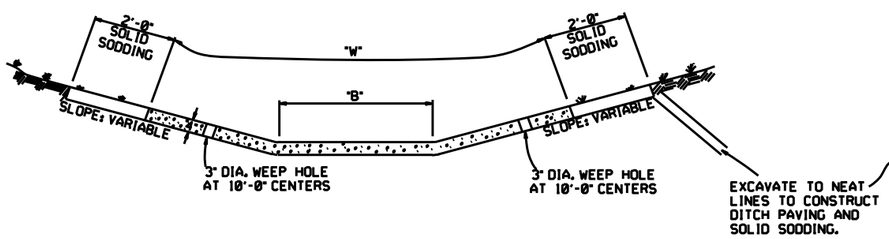

TYPE A

REFER TO TABULATION OF QUANTITIES FOR "W" DIMENSIONS

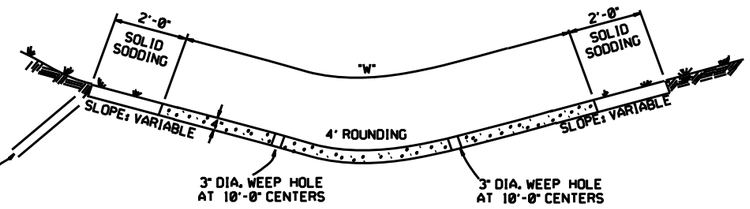

TYPE B

THE STEEL AND ADDITIONAL CONCRETE FOR THE WALLS SHALL NOT BE PAID FOR DIRECTLY, BUT SHALL BE CONSIDERED TO BE INCLUDED IN THE PRICE BID FOR "CONCRETE DITCH PAVING."

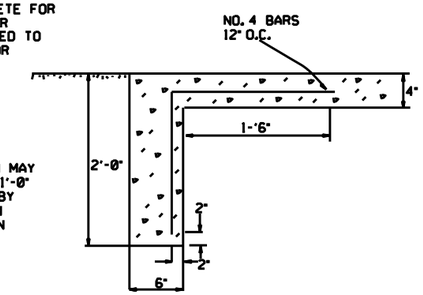

TOE WALL DEPTH MAY BE ALTERED TO 1'-0" WHEN DIRECTED BY THE ENGINEER IN ROCK EXCAVATION

TOE WALL DETAIL FOR CONCRETE DITCH PAVING

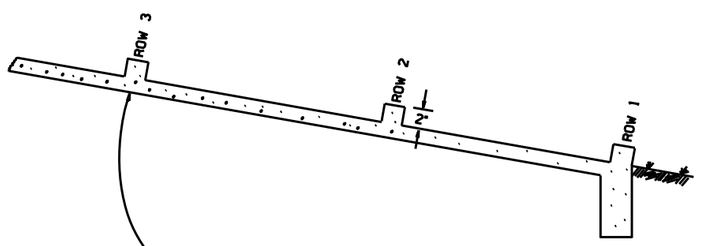

NUMBER OF ELEMENTS PER ROW VARIES WITH WIDTH OF PAVING SPECIFIED

ENERGY DISSIPATORS TO BE USED FOR THE ENTIRE LENGTH OF DITCH WHEN SLOPE OF DITCH PAVING EXCEEDS 7%. THE DISSIPATORS WILL NOT BE PAID FOR DIRECTLY, BUT SHALL BE CONSIDERED TO BE INCLUDED IN THE PRICE BID FOR CONCRETE DITCH PAVING.

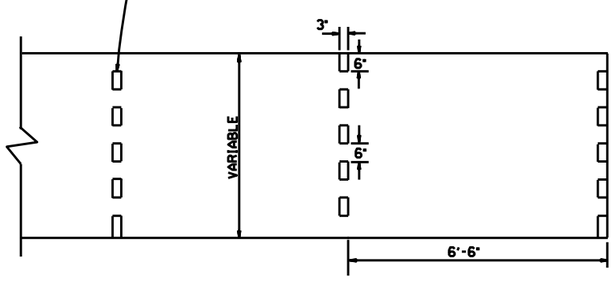

ENERGY DISSIPATORS
(NO SCALE)

GENERAL NOTES:

THE FULL WIDTH OF EACH SECTION SHALL BE POURED MONOLITHICALLY.

TOE WALLS TO BE CONSTRUCTED FULL WIDTH AT EACH END OF DITCH PAVING, AND POURED MONOLITHICALLY.

SOLID SOD ALONG DITCH PAVING TO BE PLACED WITHIN 14 DAYS OF DITCH PAVING CONSTRUCTION.

1" WIDE TRANSVERSE EXPANSION JOINTS SHALL BE PLACED IN CONCRETE DITCH PAVING AT 45' INTERVALS. THE SPACE SHALL BE FILLED WITH APPROVED JOINT FILLER COMPLYING WITH AASHTO M213.

DATE	REVISION	DATE FILMED
12-8-16	CORRECTED ENERGY DISSIPATOR DRAWING AND NOTE	
11-17-10	ADDED GENERAL NOTE	
6-2-94	ADDED GENERAL NOTE ABOUT SOLID SODDING	
11-30-8	ELIMINATED MIN. ROWS OF ELEMENTS	111-30-89
7-15-88	REVISED DISSIPATOR NOTE	653-7-15-88
4-3-87	REVISED ENERGY DISSIPATOR	671-4-3-87
1-9-87	MODIFIED NOTE ON ENERGY DISS.	532-1-9-87
11-3-86	ADDED NOTE TO ENERGY DISS.	599-12-1-86
11-1-84	ENERGY DISSIPATOR DETAILS ADDED	508-11-1-84
11-1-84	EXCAVATION DETAILS ADDED TYPED A & B	
10-2-72	REVISED AND REDRAWN	508-10-2-72

ARKANSAS STATE HIGHWAY COMMISSION

CONCRETE DITCH PAVING

STANDARD DRAWING CDP-1

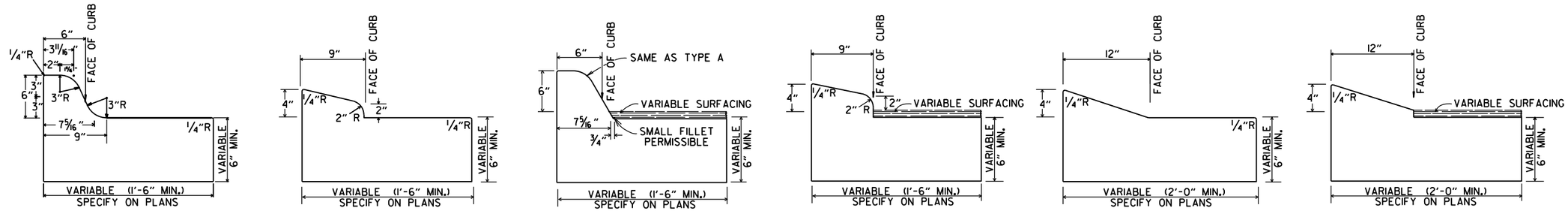

TYPE A TYPE B-1 TYPE C TYPE B-2 TYPE E-1 TYPE E-2

CONCRETE COMBINATION CURB AND GUTTER

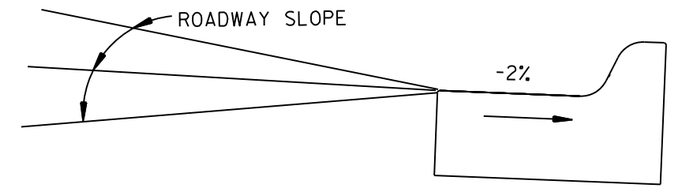

DETAIL OF GUTTER SLOPE

GUTTER SHALL BE CONSTRUCTED ON 2% SLOPE AWAY FROM ROADWAY, REGARDLESS OF ROADWAY SLOPE.

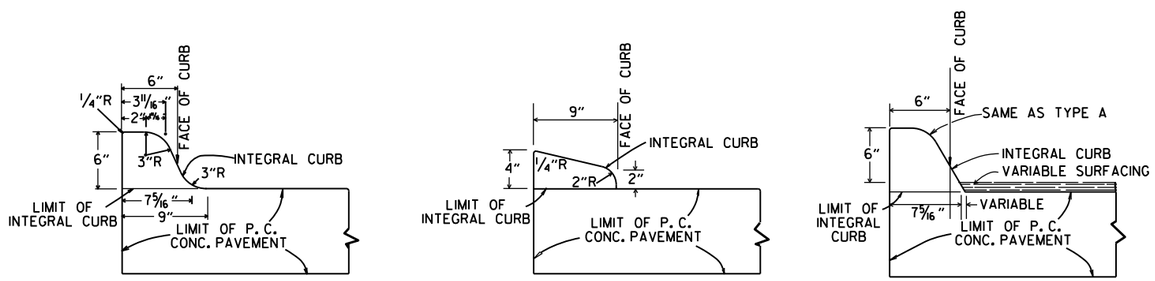

TYPE A TYPE B TYPE C

INTEGRAL CURB

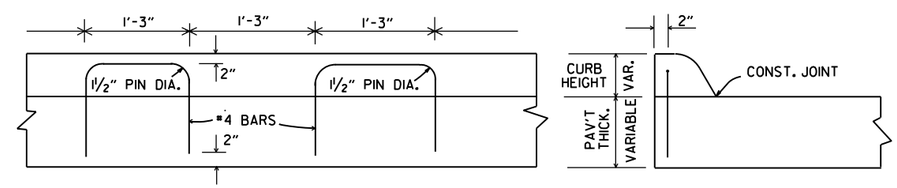

LONGITUDINAL SECTION ELEVATION

ALTERNATE CONSTRUCTION METHOD FOR INTEGRAL CURB

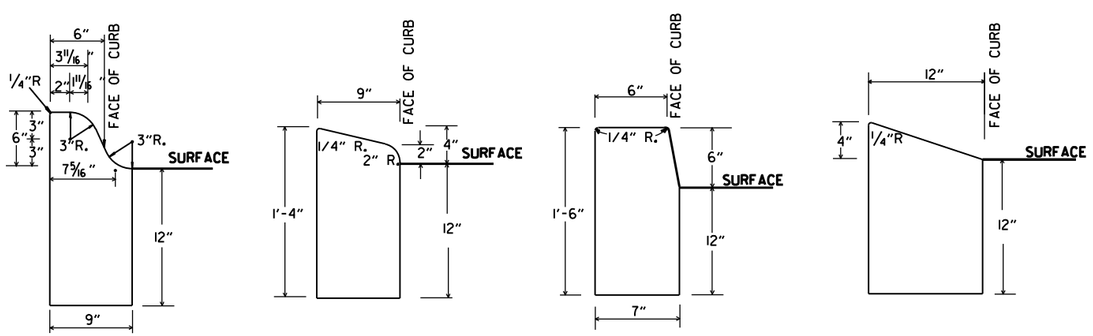

TYPE A TYPE B TYPE D TYPE E

CONCRETE CURB

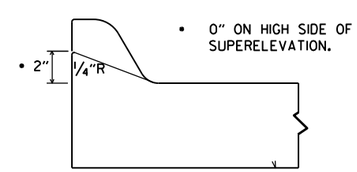

NOTE: USE MODIFIED CURB AS SPECIFIED ON STD. DR-1. COMPENSATION FOR MODIFIED CURB WILL BE CONSIDERED INCLUDED IN THE PRICE BID FOR THE TYPE OF CURB OR CURB AND GUTTER SPECIFIED.

DETAILS OF MODIFIED CURB

DATE	REVISION	DATE FILMED
11-29-07	REVISED GUTTER SLOPE & MODIFIED CURB DETAILS	
11-10-05	ADDED DETAILS OF TYPE E CURBS	
11-16-01	REVISED CONCRETE CURB TYPE B	
11-18-98	REVISED MODIFIED CURB	
6-2-94	ADDED NOTE TO SPECIAL MODIFIED CURB	
8-5-93	CORRECTED GUTTER SLOPE	8-5-93
10-1-92	ADDED DETAILS OF GUTTER SLOPE	10-1-92
5-24-90	ADDED DETAILS OF MODIFIED CURB	5-24-90
11-30-89	VARIBLE DEPTH TYPE A & B I	11-30-89
7-15-88	REVISED MODIFIED CURB	630-7-15-88
11-1-73	REVISED MODIFIED CURB	500-11-1-73
10-2-72	REVISED AND REDRAWN	512-10-2-72

ARKANSAS STATE HIGHWAY COMMISSION

CURBING DETAILS

STANDARD DRAWING CG-1

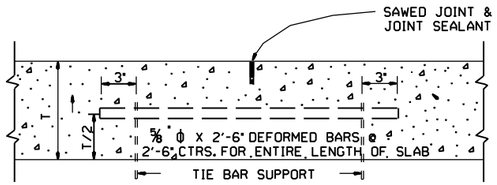

LONGITUDINAL JOINT

NOTE: THE TIE BAR SUPPORT SHOWN ABOVE MAY BE ELIMINATED IF OTHER APPROVED METHODS FOR PLACING AND SUPPORTING THE TIE BARS ARE PROVIDED.

TIE BARS SHALL BE 15" FROM TRANSVERSE JOINTS.

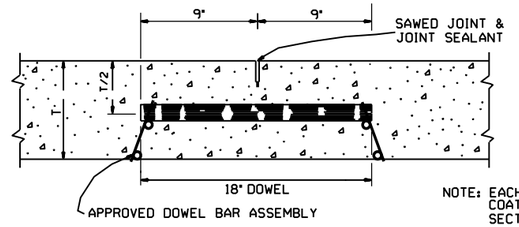

NOTE: EACH DOWEL TO BE COATED ACCORDING TO SECTION 502 OF THE STANDARD SPECIFICATIONS.

ROUND STEEL BAR DOWEL
1¼" DIA. WHEN T<10"
1½" DIA. WHEN T≥10"

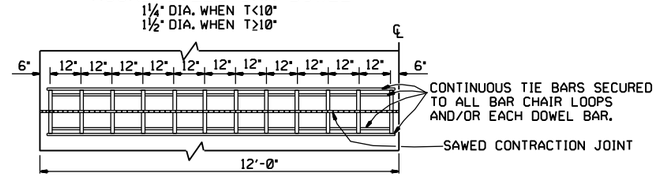

ONE-HALF 24' PAVEMENT
12 DOWELS
PLAN

NOTE: FOR 20' PAVEMENT USE 20 DOWELS @ 12" CTRS. WITH 6" SPACING FROM C.L. AND EDGE OF SLAB TO FIRST BAR. FOR 15' PAVEMENT USE 15 DOWELS @ 12" CTRS. WITH 6" SPACING FROM C.L. AND EDGE OF SLAB TO FIRST BAR. FOR 26' PAVEMENT USE 26 DOWELS @ 12" CTRS. WITH 6" SPACING FROM C.L. AND EDGE OF SLAB TO FIRST BAR. FOR PAVEMENT WIDTHS OTHER THAN THOSE SHOWN ABOVE, USE DOWELS AT 12" CTRS. WITH 6" MAX. SPACING FROM C.L. TO FIRST BAR. DISTANCE FROM EDGE OF SLAB TO FIRST BAR SHALL BE ADJUSTED TO MAINTAIN 12" DOWEL BAR SPACING

CONTRACTION JOINT DETAILS

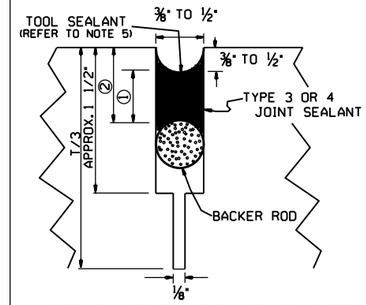

DETAIL OF SAWED CONTRACTION JOINT

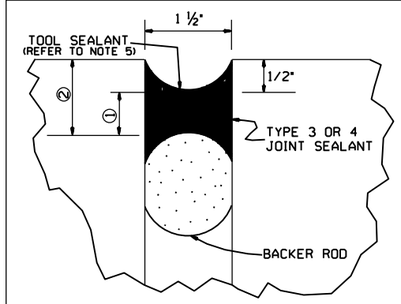

DETAIL OF EXPANSION JOINT

JOINT CONFIGURATION FOR TYPE 3 OR 4 JOINT SEALANT

JOINT WIDTH	SEALANT THICKNESS ①	BACKER ROD DIAMETER	BACKER ROD PLACEMENT DEPTH ②
INCHES			
¼	¼	⅜	½
⅜	¼	½	½
½	¼	5/8	½
5/8	5/16	¾	5/16
¾	⅜	⅞	⅞
1 ½	¾	2	1 ¼

JOINT CONFIGURATION FOR TYPE 5 JOINT SEALANT

JOINT WIDTH	SEALANT THICKNESS ①	BACKER ROD DIAMETER	BACKER ROD PLACEMENT DEPTH ②
INCHES			
¼	½	⅜	¾
⅜	¾	½	1

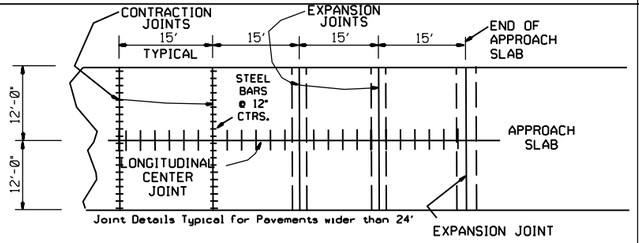

PLAN SHOWING EXPANSION JOINTS AT BRIDGE APPROACH SLABS

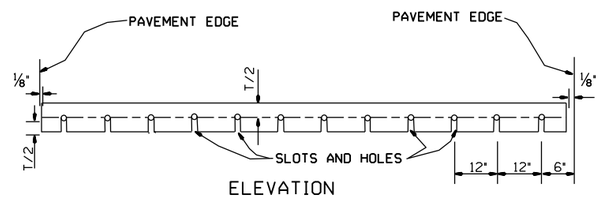

ELEVATION

NOTE: ALL DOWEL BARS SHALL CONFORM TO THE DETAILS FOR CONTRACTION JOINTS.

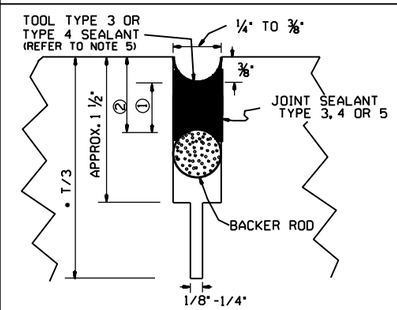

*NOTE: T/3 SAW CUT NOT REQUIRED FOR LONGITUDINAL CONSTRUCTION JOINT.

DETAIL OF SAWED LONGITUDINAL JOINT AND LONGITUDINAL CONSTRUCTION JOINT

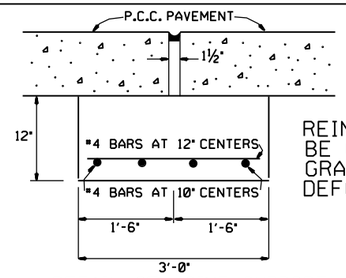

REINFORCING SHALL BE GRADE 40 OR GRADE 60 DEFORMED BARS.

DETAIL OF JOINT SUPPORT FOR EXPANSION JOINTS

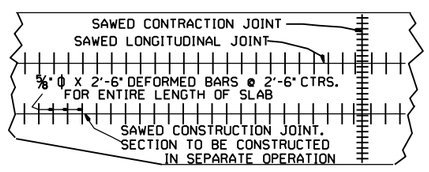

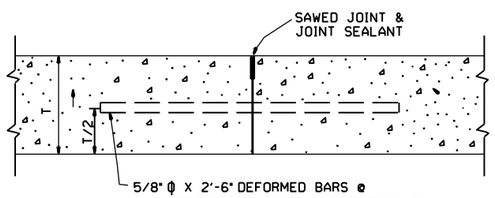

NOTE: TIE BARS SHALL BE 15" FROM TRANSVERSE JOINTS.

LONGITUDINAL CONSTRUCTION JOINT

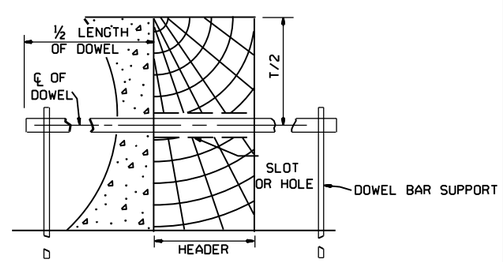

SECTION

TRANSVERSE CONSTRUCTION JOINT

DATE	REVISION	DATE FILMED
11-07-19	REV. EXP. JOINT REF ON APP. SLAB	
5-25-06	ADDED GENERAL NOTE 7	
10-9-03	REMOVED TIE BAR COATING & REVISED GENERAL NOTES	
11-16-01	ADDED TOOL SEALANT AND NOTE 5; REVISED NOTE 3	
4-26-96	REVISED CONTRACTION JOINT NOTE	
11- 3-94	ADDED NOTE RE: REINF. BARS	
4- 1-93	REVISED DOWEL BARS & GEN. NOTES	4- 1-93
10- 1-92	REVISED DOWEL SPACING	10- 1-92
8- 15-91	ADDED SPAC FOR CONTR JTS & DEL KEYWAY	
05-24-90	REVISED TIE BAR, DOWEL & JOINT SIZE	
01-25-90	ADDED EXPANSION JOINT	01-25-90
11-30-89	CHANGED T/4+1 TO T/3+1	11-30-89
03-23-89	ALTERED SAWED JOINT & ADDED NOTE	512-03-23-89
07-15-88	REVISED AND REDRAWN	632-07-15-88

GENERAL NOTES

1. "T" DENOTES THICKNESS OF SLAB.
2. DOWEL BARS SHALL BE PLACED IN ACCORDANCE WITH THE DIMENSIONS SHOWN. A TOLERANCE OF PLUS OR MINUS ONE INCH WILL BE ALLOWED FOR THE VERTICAL AND LATERAL PLACEMENT AND A TOLERANCE OF PLUS OR MINUS ¼" WILL BE ALLOWED FOR THE TILT AND SKEW. DOWEL BARS SHALL BE FIELD COATED FOR A MINIMUM DISTANCE OF 2" GREATER THAN HALF THE LENGTH OF THE BAR WITH AN APPROVED GREASE AS A BOND BREAKER JUST PRIOR TO PLACEMENT OF CONCRETE.
3. THE EXPANSION JOINT SUPPORT MAY BE CONSTRUCTED WITH CLASS "A", "S" OR PAVING CONCRETE. PAYMENT FOR THE JOINT SUPPORT SHALL BE FOR THE CONTRACT UNIT PRICE BID FOR THE CLASS OF CONCRETE SPECIFIED IN THE PLANS. PAYMENT FOR ALL OTHER WORK AND MATERIALS REQUIRED FOR THE CONSTRUCTION OF THE JOINT SUPPORT SHALL BE INCLUDED IN THE PRICE BID FOR THE ABOVE ITEMS.
4. CONTRACTION JOINTS SHALL BE CONSTRUCTED ON 15' CENTERS.
5. TOOLING NOT REQUIRED FOR SELF-LEVELING SILICONE.
6. UNLESS OTHERWISE SPECIFIED IN THE PLANS, CONCRETE SHOULDERS SHALL BE CONSTRUCTED ACCORDING TO THE DETAILS SHOWN HEREON. CONTRACTION JOINTS SHALL MATCH CONTRACTION JOINTS IN THE LANES.
7. TIE WIRES IN DOWEL BAR ASSEMBLIES SHALL NOT BE CUT PRIOR TO PLACEMENT OF PAVING CONCRETE.

ARKANSAS STATE HIGHWAY COMMISSION

TRANSVERSE & LONGITUDINAL JOINTS FOR CONCRETE PAVEMENT (NON-REINFORCED)

STANDARD DRAWING CPTJ - 6A

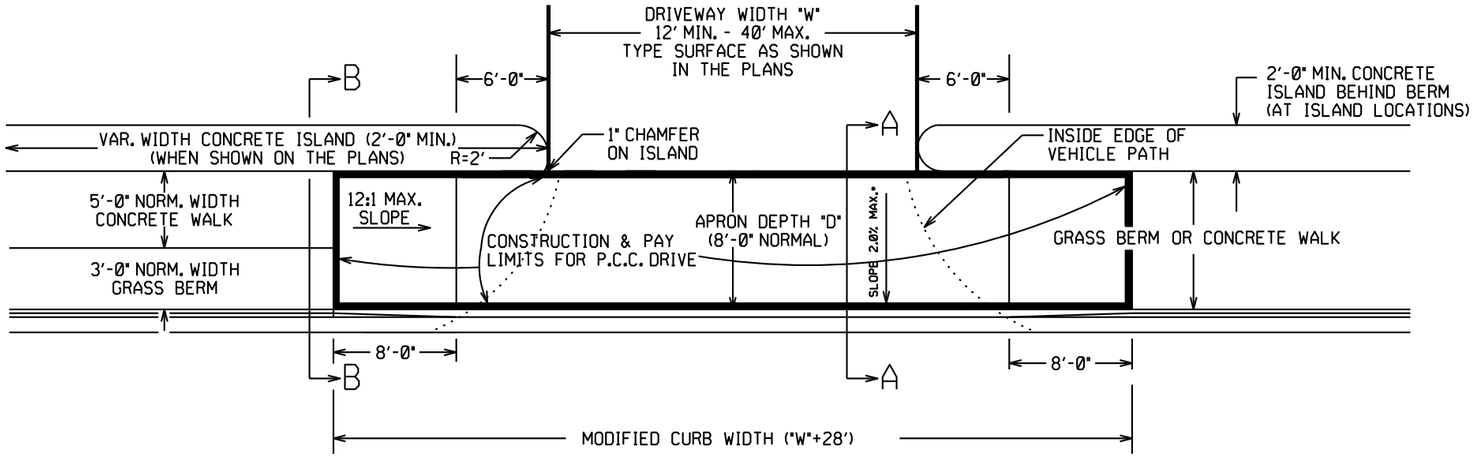

PLAN VIEW

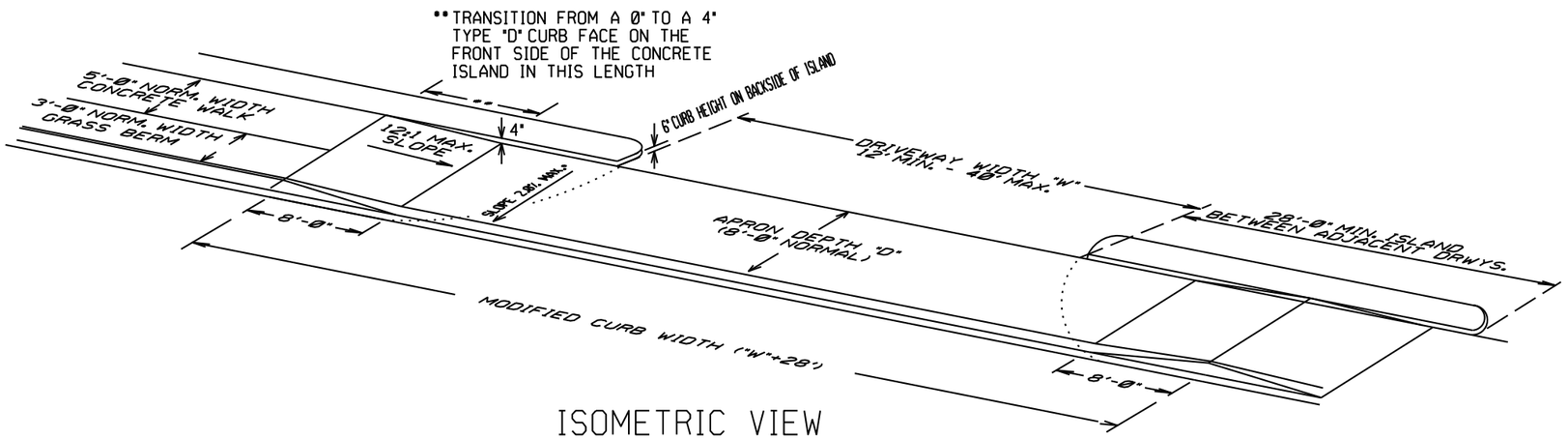

ISOMETRIC VIEW

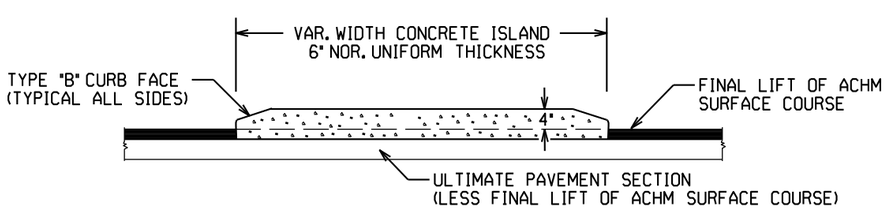

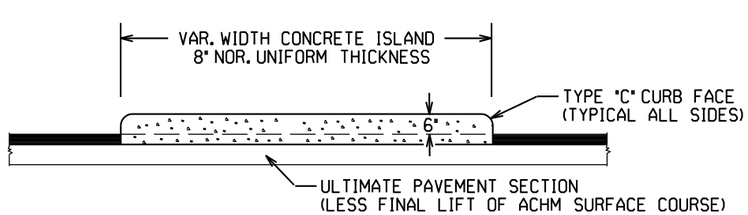

CURBED ISLANDS FOR CHANNELIZATION

CONCRETE ISLAND NOTES:

1. REFER TO PLANS FOR TYPE OF CURB FACE TO BE USED. NO DIRECT PAYMENT WILL BE MADE FOR THE CURB FACES SHOWN ON THE ISLAND DETAILS. PAYMENT FOR THE CURB FACE WILL BE INCLUDED IN THE UNIT PRICE BID FOR THE ITEM "CONCRETE ISLAND".

2. TRANSVERSE EXPANSION JOINTS, NOT LESS THAN 1/2" WIDE, SHALL BE PLACED AT MINIMUM INTERVAL OF 45'. TRANSVERSE JOINT SHALL BE CONSTRUCTED USING A JOINT FILLER COMPLYING WITH AASHTO M213.

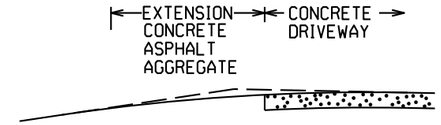

EXTENSION TYPICAL SECTIONS

1: CONCRETE - 6" P.C. CONCRETE DRIVEWAY

2: ASPHALT - 2" ACHM SURFACE COURSE (1/2")
4" ACHM BINDER COURSE (1") OR
4" ACHM BASE COURSE (1-1/2")

3: ASPHALT - 2" ACHM SURFACE COURSE (1/2")
7" AGGREGATE BASE COURSE

4: AGGREGATE - 6" AGGREGATE BASE COURSE

THE TYPE OF EXTENSION SHALL BE AS SHOWN IN THE PLANS. THE CONTRACTOR MAY, WITH THE APPROVAL OF THE ENGINEER, SUBSTITUTE A LOWER NUMBERED TYPE OF EXTENSION IN LIEU OF THE TYPE SPECIFIED IN THE PLANS, BUT AT NO ADDITIONAL COST TO THE DEPARTMENT.

DRIVEWAY EXTENSION DETAILS

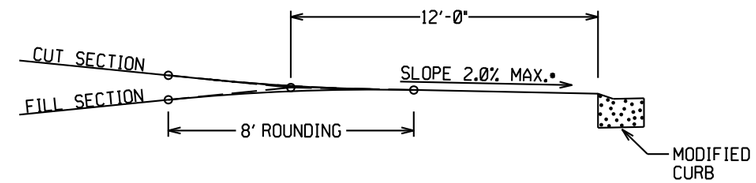

DRIVEWAY VERTICAL ALIGNMENT DETAILS

- NOTE: DRIVEWAYS MAY NOT BE SLOPED AWAY FROM THE ROADWAY UNLESS APPROVED BY THE ENGINEER.

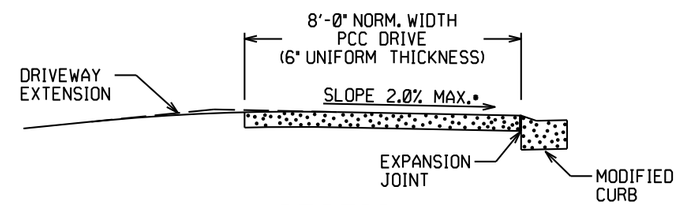

SECTION A-A

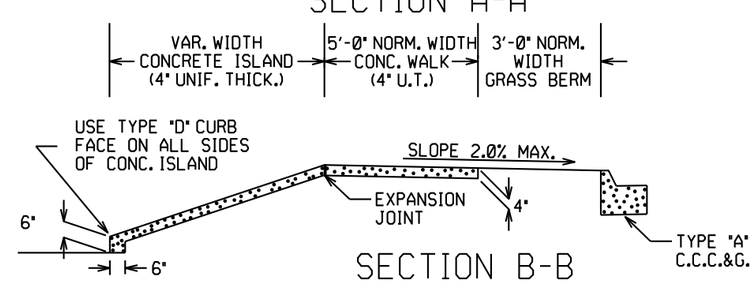

SECTION B-B

CURBED ISLAND BEHIND WALK

DATE REV	DATE FILMED	DESCRIPTION
5-19-22		REVISED ISLAND NOTES
11-07-19		REVISED WALK DETAILS
2-27-14		REVISED PLAN & ISOMETRIC VIEW
11-29-07		ADDED CHANNELIZATION ISLAND WITH TYPE C CURB FACE & REVISED DRIVEWAY SLOPE NOTE & VERTICAL ALIGNMENT DETAIL
11-10-05		REV. APRON SLOPE & DEPTH OF AGG. BASE.
8-22-02		ADDED ISLAND DETAILS & NOTES
3-30-00		REV. MOD. CURB WIDTH & TRANS. NOTE
11-19-98		REVISED NOTES
11-18-98		REDRAWN AND REISSUED

ARKANSAS STATE HIGHWAY COMMISSION

DETAILS OF DRIVEWAYS & ISLANDS

STANDARD DRAWING DR-1

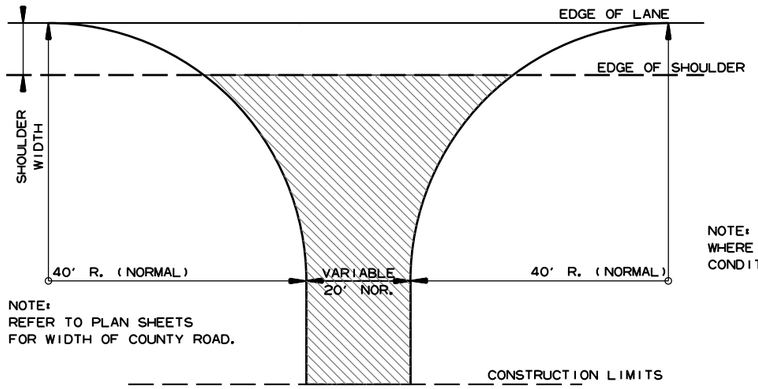

NOTE:
REFER TO PLAN SHEETS
FOR WIDTH OF COUNTY ROAD.

NOTE: TURNOUTS SHALL BE MODIFIED WHERE NECESSARY TO MEET LOCAL CONDITIONS AS DIRECTED BY THE ENGINEER.

ACHM SURFACE COURSE (1/2") (220 LBS. PER SQ. YD.) AND AGGREGATE BASE COURSE (CLASS 7) 7" COMP. DEPTH, UNLESS OTHERWISE SPECIFIED IN PLANS.

DETAIL FOR COUNTY ROAD TURNOUTS OPEN SHOULDER SECTION

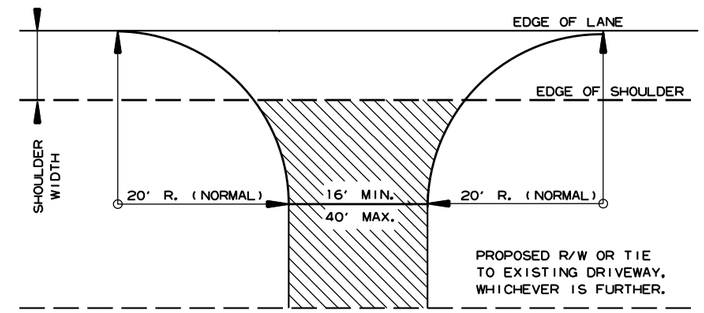

NOTE: TURNOUTS AND PRIVATE DRIVES SHALL BE MODIFIED WHERE NECESSARY TO MEET LOCAL CONDITIONS AS DIRECTED BY THE ENGINEER.

ACHM SURFACE COURSE (1/2") (220 LBS. PER SQ. YD.) AND AGGREGATE BASE COURSE (CLASS 7) 7" COMP. DEPTH IF ASPHALT OR GRAVEL DRIVE EXISTING; OR 6" CONCRETE IF CONCRETE DRIVE EXISTING.

DETAIL FOR DRIVEWAY TURNOUTS OPEN SHOULDER SECTION (ARTERIALS)

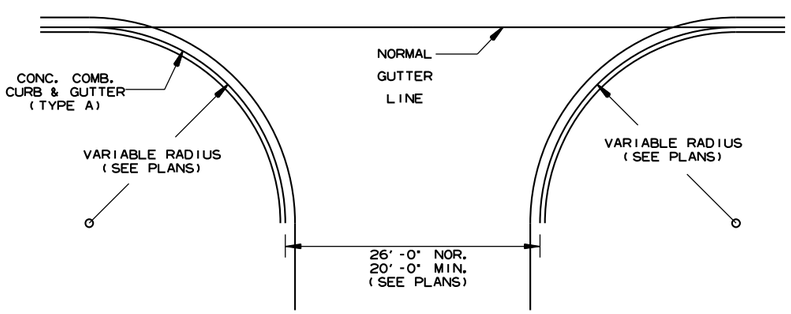

NOTE:
PAVEMENT STRUCTURE FOR STATE HIGHWAYS, CITY STREETS, & COUNTY ROADS TO BE SAME AS MAIN LANES.

DETAIL OF TURNOUTS, ASPHALT STREETS, COUNTY ROADS & STATE HIGHWAYS CURB & GUTTER SECTION

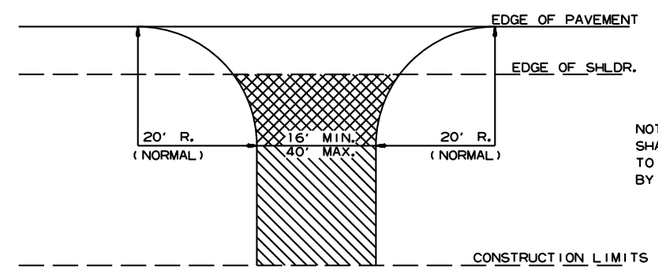

NOTE: TURNOUTS AND PRIVATE DRIVES SHALL BE MODIFIED WHERE NECESSARY TO MEET LOCAL CONDITIONS AS DIRECTED BY THE ENGINEER.

ASPHALT CONCRETE HOT MIX SURFACE COURSE (220 LBS. PER SQ. YD.) AGGREGATE BASE COURSE (CLASS 7) 7" COMP. DEPTH IF ASPHALT DRIVE EXIST OR 6" CONCRETE IF CONCRETE DRIVE EXIST.

AGGREGATE BASE COURSE (CLASS 7) 9" COMP. DEPTH OR CONFORM TO EXISTING DRIVEWAY

DETAIL FOR DRIVEWAY TURNOUTS (COLLECTORS)

DATE REV	DATE FILMED	DESCRIPTION
5-19-22		ISSUED

ARKANSAS STATE HIGHWAY COMMISSION

DETAILS OF DRIVEWAYS & STREET TURNOUTS

STANDARD DRAWING DR-2

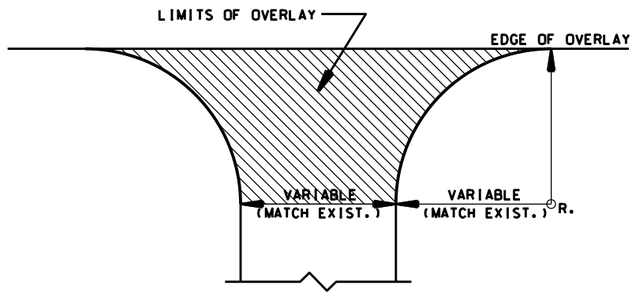

DETAIL FOR STATE HIGHWAY TURNOUTS
(PAVEMENT PRESERVATION)

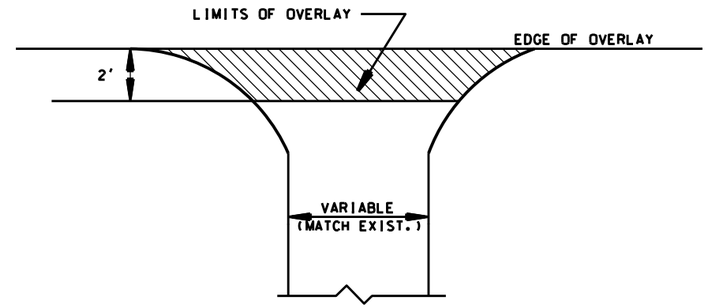

DETAIL FOR DRIVEWAY TURNOUTS
(PAVEMENT PRESERVATION)

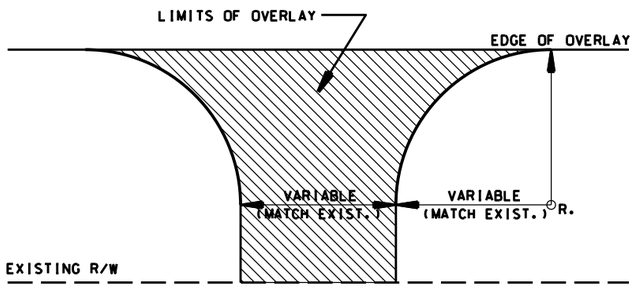

DETAIL FOR CITY STREET
AND COUNTY ROAD TURNOUTS
(PAVEMENT PRESERVATION)

NOTES:

1. TURNOUTS AND PRIVATE DRIVES SHALL BE MODIFIED WHERE NECESSARY TO MEET LOCAL CONDITIONS AS DIRECTED BY THE ENGINEER.
2. NORMAL ACHM SURFACE COURSE (1/2") (220 LBS PER SQ. YD.) SHALL BE USED ON DRIVEWAYS AND TURNOUTS UNLESS SHOWN OTHERWISE IN THE PLANS.
3. STATE HIGHWAY TURNOUTS SHALL BE PAVED TO THE BACK OF THE RADIUS.
4. CITY STREET AND COUNTY ROAD TURNOUTS SHALL BE PAVED TO THE RIGHT-OF-WAY LIMITS.

DATE REV	DATE FILMED	DESCRIPTION
4-13-23		REVISED PAVING AT TURNOUTS
5-19-22		ISSUED

ARKANSAS STATE HIGHWAY COMMISSION

DETAILS OF DRIVEWAYS & STREET TURNOUTS (PAVEMENT PRESERVATION)

STANDARD DRAWING DR-3

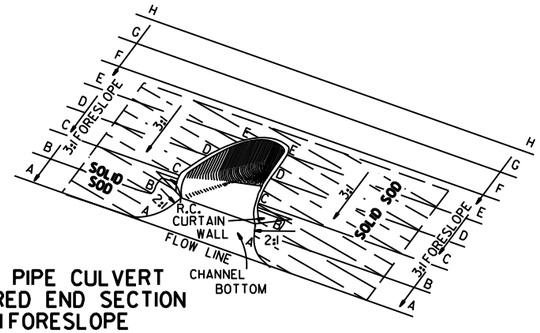

TYPICAL PIPE CULVERT
WITH FLARED END SECTION
& 3:1 FORESLOPE

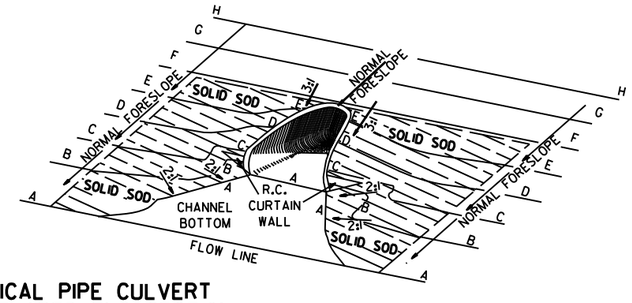

TYPICAL PIPE CULVERT
WITH FLARED END SECTION
& FLATTENED ADJACENT SLOPES

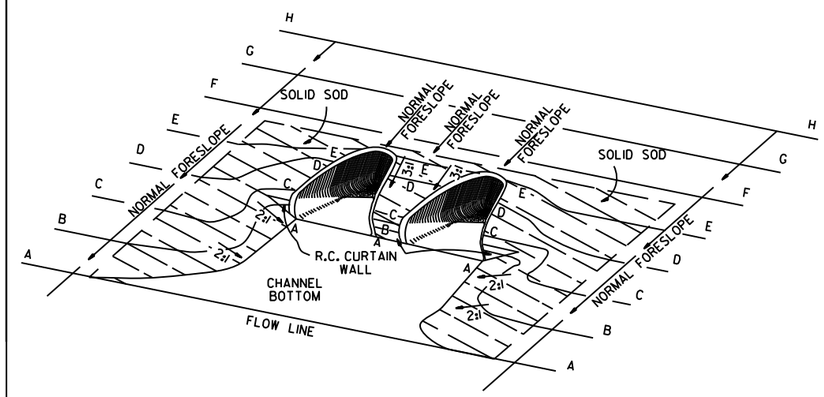

TYPICAL MULTIPLE PIPE CULVERT
WITH FLARED END SECTIONS
& FLATTENED ADJACENT SLOPES

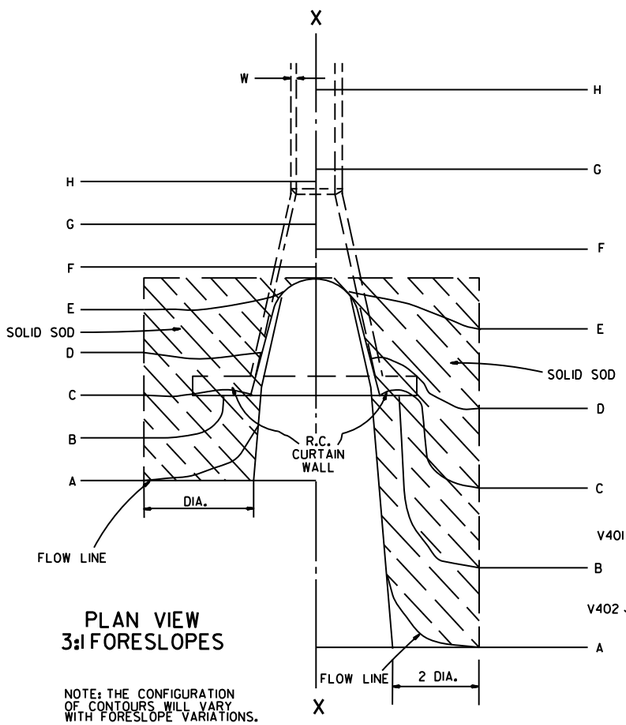

PLAN VIEW
3:1 FORESLOPES

NOTE: THE CONFIGURATION OF CONTOURS WILL VARY WITH FORESLOPE VARIATIONS.

PLAN VIEW
FLATTENED FORESLOPES

R.C. CURTAIN WALL DIMENSIONS & QUANTITIES

PIPE DIA.	H_1	L_1	L	L (DBL.)/2	SINGLE R.C.P.C. CONC.	SINGLE R.C.P.C. REINF. STEEL	DOUBLE R.C.P.C. CONC.	DOUBLE R.C.P.C. REINF. STEEL
					CU. YDS.	LBS.	CU. YDS.	LBS.
18"	11½"	3'-5"	8'-0"	6'-3"	0.31	27.7	0.45	39.5
24"	1'-0½"	4'-6"	9'-6"	7'-6"	0.37	33.4	0.53	48.0
30"	1'-3½"	5'-7"	11'-0"	9'-0"	0.45	39.0	0.67	59.0
36"	1'-7"	6'-8"	13'-0"	10'-6"	0.58	52.6	0.83	73.9
42"	2'-1½"	7'-3"	15'-6"	12'-0"	0.82	77.1	1.10	100.7
48"	2'-5"	7'-10"	17'-0"	13'-0"	0.98	94.9	1.27	120.4
54"	2'-9½"	8'-5"	18'-6"	14'-0"	1.16	115.8	1.47	143.7
60"	3'-4"	9'-0"	20'-6"	15'-6"	1.47	149.7	1.84	180.3
72"	4'-5"	10'-2"	25'-6"	18'-6"	2.31	232.6	2.73	271.0

NOTE: QUANTITIES SHOWN ARE FOR ONE (1) CURTAIN WALL.

REINFORCING STEEL SCHEDULE

PIPE DIA.	SINGLE R.C. PIPE CULVERT H401 L	NO.	H402 L	NO.	V401 L	NO.	V402 L	NO.	DOUBLE R.C. PIPE CULVERT H401 L	NO.	H402 L	NO.	H403 L	NO.	V401 L	NO.	V402 L	NO.
18"	7'-8"	2	1'-11½"	4	1'-7½"	8	8"	8	12'-2"	2	1'-11½"	4	8"	2	1'-7½"	10	8"	14
24"	9'-2"	2	2'-2"	4	1'-8½"	10	8"	9	14'-8"	2	2'-2"	4	8"	2	1'-8½"	12	8"	18
30"	10'-8"	2	2'-4½"	4	1'-11½"	10	8"	12	17'-8"	2	2'-4½"	4	8"	2	1'-11½"	14	8"	22
36"	12'-8"	2	2'-10"	6	2'-3"	12	8"	14	20'-8"	2	2'-10"	6	8"	3	2'-3"	14	8"	28
42"	15'-2"	2	3'-9½"	8	2'-9½"	16	8"	15	23'-8"	2	3'-9½"	8	8"	4	2'-9½"	18	8"	30
48"	16'-8"	2	4'-3"	10	3'-1"	18	8"	16	25'-8"	2	4'-3"	10	8"	5	3'-1"	20	8"	32
54"	18'-2"	2	4'-8½"	12	3'-5½"	20	8"	17	27'-8"	2	4'-9"	12	8"	6	3'-5½"	22	8"	34
60"	20'-2"	2	5'-5"	14	4'-0"	24	8"	18	30'-8"	2	5'-5"	14	8"	7	4'-0"	26	8"	36
72"	25'-2"	2	7'-4"	18	5'-1"	30	8"	20	36'-8"	2	7'-4"	18	8"	9	5'-1"	33	8"	40

ALL REINFORCING STEEL #4 BARS @ 6" O.C.

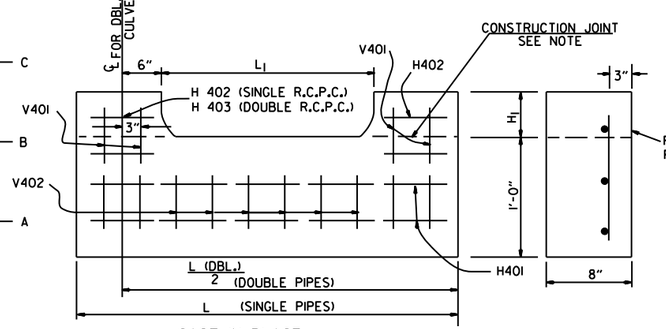

CAST-IN-PLACE

NOTE: THE PORTION OF THE R.C. CURTAIN WALL BENEATH THE FLARED END SECTION (LOWER 1'-0") SHALL BE PLACED MONOLITHICALLY. THE FLARED END SECTION SHALL THEN BE SET IN PLACE & THE REMAINING PORTIONS OF THE R.C. CURTAIN WALL PLACED.

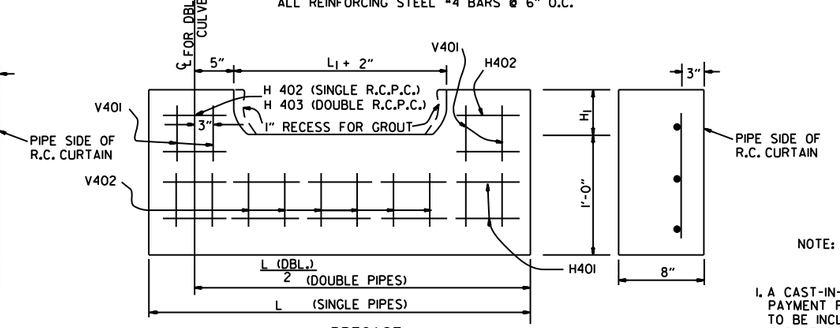

PRECAST

NOTE: THE PRECAST CURTAIN WALL WILL BE SET AND BACKFILLED WITH COMPACTED MATERIAL. THE FLARED END SECTION SHALL THEN BE SET IN PLACE AND THE 1" RECESS FILLED WITH GROUT. WHERE "L" EXCEEDS 11' THE CURTAIN WALL MAY BE CAST IN TWO (2) OR MORE SECTIONS. THE METHOD OF JOINING THE SECTIONS FOR INSTALLATION SHALL BE APPROVED BY THE ENGINEER.

R.C. CURTAIN WALL DETAILS

SOLID SODDING

PIPE DIA.	SINGLE R.C.P.C. 3:1	4:1	6:1	DOUBLE R.C.P.C. 3:1	4:1	6:1
	SQ. YDS.			SQ. YDS.		
18"	5	7	12	6	8	13
24"	8	12	19	9	13	20
30"	13	18	29	14	19	30
36"	17	26	41	18	28	43
42"	23	35	55	25	37	57
48"	29	46	68	31	48	70
54"	35	57	85	37	59	87
60"	45	62	104	48	65	107
72"	64	92	156	67	95	159

NOTE: QUANTITIES SHOWN ABOVE ARE FOR ONE (1) END OF F.E.S.

GENERAL NOTES

1. A CAST-IN-PLACE OR PRECAST CURTAIN WALL MAY BE USED. PAYMENT FOR THE CURTAIN WALL SHALL BE CONSIDERED TO BE INCLUDED IN THE UNIT PRICE BID EACH FOR FLARED END SECTIONS OF THE SEVERAL SIZES, WHICH PRICE SHALL BE FULL COMPENSATION FOR FURNISHING ALL MATERIALS INCLUDING REINFORCING STEEL AND CONCRETE; FOR FORMS, MIXING AND PLACING; FOR EXCAVATION AND BACKFILL, AND FOR ALL LABOR, TOOLS, EQUIPMENT AND INCIDENTALS NECESSARY TO COMPLETE THE WORK.
2. ALL EXPOSED EDGES SHALL BE CHAMFERED ¾".
3. CONCRETE FOR CURTAIN WALL SHALL MEET THE REQUIREMENTS FOR CLASS A OR S CONCRETE AS PROVIDED IN SECTION 802 OF THE STANDARD SPECIFICATIONS OR FOR PAVING CONCRETE AS PROVIDED IN SECTION 501 OF THE STANDARD SPECIFICATIONS.
4. WELDED WIRE MESH 3 x 3 W/10 x W10 MAY BE USED IN LIEU OF REINFORCING BARS.

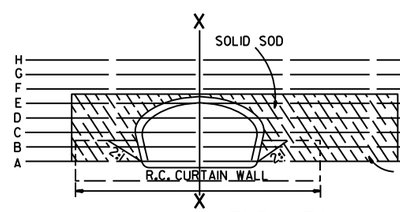

END VIEW

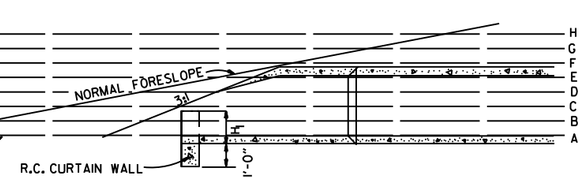

SECTIONAL VIEW "X-X"

DATE	REVISION	FILMED
10-18-96	ADDED NOTE TO SOLID SODDING	
10-12-95	CORRECTED SPELLING	
11-3-94	ADDED GENERAL NOTE NO. 4	
8-15-91	REV. CURTAIN WALL QUANT. STEEL SCH. & SOLID SOD QUANT.	
3-2-81	ALLOW PRECAST IN 2 OR MORE PIECES CHAMFER EDGES	
5-15-80	ADDED PRECAST WALL & GENERAL NOTES	
10-2-72	REVISED AND REDRAWN	

ARKANSAS STATE HIGHWAY COMMISSION

FLARED END SECTION

STANDARD DRAWING FES-1

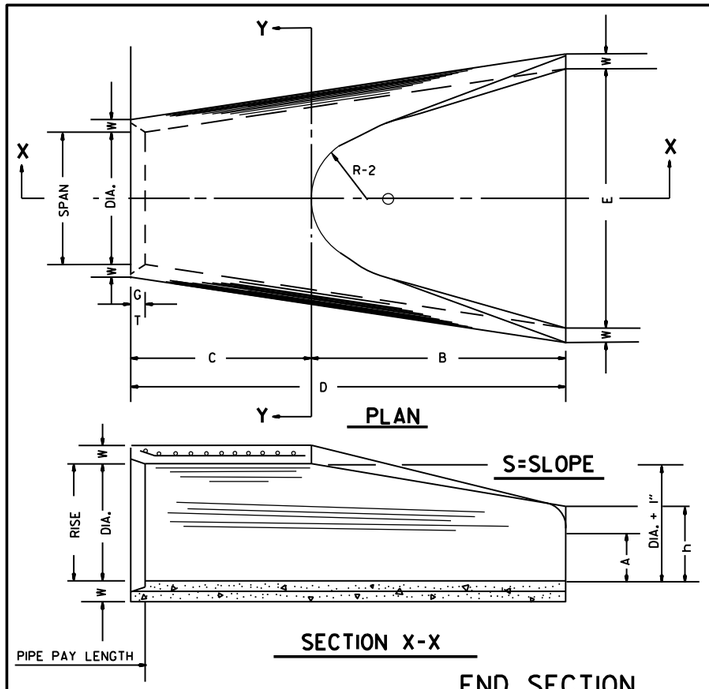

TABLE OF DIMENSIONS

DIA.	WALL	A	B	C	D	E	S	DIA. + 1"	P	R-1	R-2	G-T	WT.	h
18"	2½"	9"	2'-3"	3'-10"	6'-1"	3'-0"	3:1	19"	29"	15½"	12"	2"	1000	1'-0½"
24"	3"	9½"	3'-7½"	2'-6"	6'-1½"	4'-0"	3:1	25"	33 3/16"	16 13/16"	14"	2½"	1600	1'-1½"
30"	3½"	1'-0"	4'-6"	1'-7¾"	6'-1¾"	5'-0"	3:1	31"	37"	18½"	15"	3¼"	1940	1'-4⅝"
36"	4"	1'-3"	5'-3"	2'-10¾"	8'-1¾"	6'-0"	3:1	37"	47 13/16"	24 5/16"	20"	3½"	4100	1'-8"
42"	4½"	1'-9"	5'-3"	2'-11"	8'-2"	6'-6"	3:1	43"	53⅛"	27½"	22"	3½"	5380	2'-2½"
48"	5"	2'-0"	6'-0"	2'-2"	8'-2"	7'-0"	3:1	49"	56½"	28½"	22"	3½"	6550	2'-6"
54"	5½"	2'-4"	6'-6"	1'-10"	8'-4"	7'-6"	3:1	55"	65½"	33⅛"	24"	4"	8750	2'-10½"
60"	6"	2'-10"	6'-6"	1'-10"	8'-4"	8'-0"	3:1	61"	72½"	36 11/16"	24"	4"	9270	3'-5"
72"	7"	3'-10"	6'-6"	1'-10"	8'-4"	9'-0"	3:1	73"	77 13/16"	38 15/16"	24"	5"	13250	4'-6"

ARCH PIPE

EQUIV. DIA.	• SPAN AASHTO M 206	• SPAN AHD NOMINAL	• RISE AASHTO M 206	• RISE AHD NOMINAL	W	A	B	C	D	E	P	R2	G-T	S
INCHES														
15	18	18	11	11	2"	4"	2'-0"	4'-0"	6'-0"	3'-0"	29"	12"	1½"	2½:1
18	22	22	13½	14	2½"	5"	2'-0"	4'-1"	6'-1"	3'-6"	32⅛"	13"	2½"	2½:1
21	26	26	15½	16	2¾"	7"	2'-3"	3'-10"	6'-1"	4'-0"	34⅛"	14"	2½"	2½:1
24	28½	29	18	18	3"	9"	2'-3"	3'-10"	6'-1"	5'-0"	36 15/16"	15"	2½"	2½:1
30	36¼	36	22½	23	3½"	10"	3'-1"	3'-0½"	6'-1½"	6'-0"	47 15/16"	20"	3"	2½:1
36	43¾	44	26⅝	27	4"	10½"	4'-0"	2'-1½"	6'-1½"	6'-6"	54 9/16"	22"	3½"	2½:1
42	51⅛	51	31 5/16	31	4½"	11½"	4'-7"	1-10¼"	6'-5¼"	7'-2"	59½"	23"	3¾"	2½:1
48	58½	59	36	36	5"	1'-3"	5'-3"	2'-10¾"	8'-1¾"	7'-10"	70 5/16"	24"	4¼"	2½:1
54	65	65	40	40	5½"	1'-7"	5'-3"	2'-11"	8'-2"	8'-6"	72 1/16"	24"	4¾"	2¼:1
60	73	73	45	45	6"	1'-10"	5'-6"	2'-8"	8'-2"	9'-0"	77 15/16"	24"	5"	2¼:1

• THE MEASURED SPAN AND RISE SHALL NOT VARY MORE THAN ± 2 PER CENT FROM THE VALUES SPECIFIED BY AASHTO M 206.

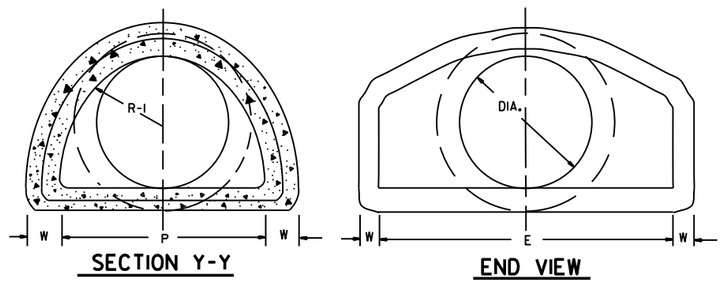

NOTE: TONGUE END ON UPSTREAM SECTION
GROOVE END ON DOWNSTREAM SECTION

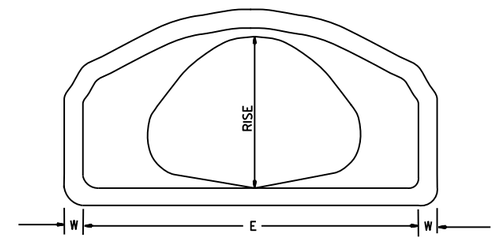

END VIEW
CONCRETE ARCH PIPE

END SECTION FOR REINFORCED CONCRETE PIPE CULVERTS

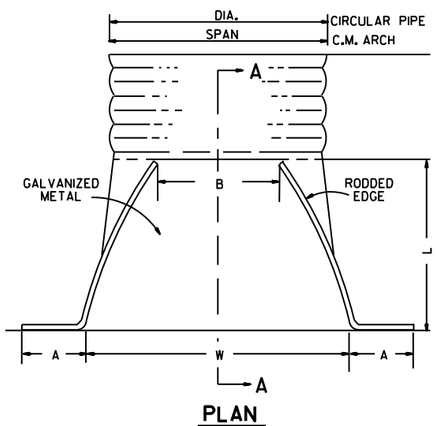

PLAN

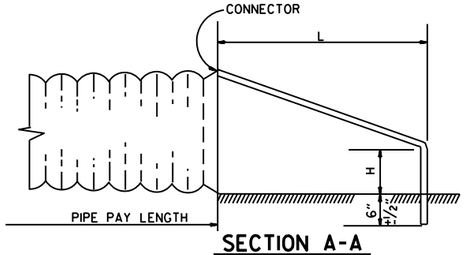

SECTION A-A

NOTE: ALTERNATE CONNECTIONS TO THE PIPE CULVERTS, IN ACCORDANCE WITH MANUFACTURER'S STANDARD PRACTICES, MAY BE MADE SUBJECT TO THE APPROVAL OF THE ENGINEER.

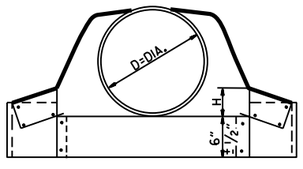

CIRCULAR PIPE

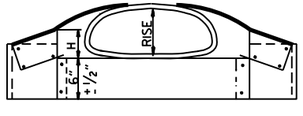

C.M. ARCH PIPE

CIRCULAR PIPE

D. DIA.	GAUGE	A 1" ±	B. MAX.	H 1" ±	L 1½" ±	W 2" ±	S
INCHES							
12	16	6	6	6	21	24	2½:1
15	16	7	8	6	26	30	2½:1
18	16	8	10	6	31	36	2½:1
21	16	9	12	6	36	42	2½:1
24	16	10	13	6	41	48	2½:1
30	14	12	16	8	51	60	2½:1
36	14	14	19	9	60	72	2½:1
42	12	16	22	11	69	84	2½:1
48	12	18	27	12	78	90	2½:1
54	12	18	30	12	84	102	2:1
60	12	18	33	12	87	114	1¾:1
66	12	18	36	12	87	120	1½:1
72	12	18	39	12	87	126	1 1/3:1

C.M. ARCH PIPE

EQUIV. DIA.	SPAN	RISE	A 1" ±	B MAX.	H 1" ±	L 1½" ±	W 2" ±	S	GAUGE
INCHES									
15"	17	13	7	9	6	19	30	2½:1	16
18"	21	15	7	10	6	23	36	2½:1	16
21"	24	18	8	12	6	28	42	2½:1	16
24"	28	20	9	14	6	32	48	2½:1	16
30"	35	24	10	16	6	39	60	2½:1	14
36"	42	29	12	18	8	46	75	2½:1	14
42"	49	33	13	21	9	53	85	2½:1	12
48"	57	38	18	26	12	63	90	2½:1	12
54"	64	43	18	30	12	70	102	2¼:1	12
60"	71	47	18	33	12	77	114	2¼:1	12

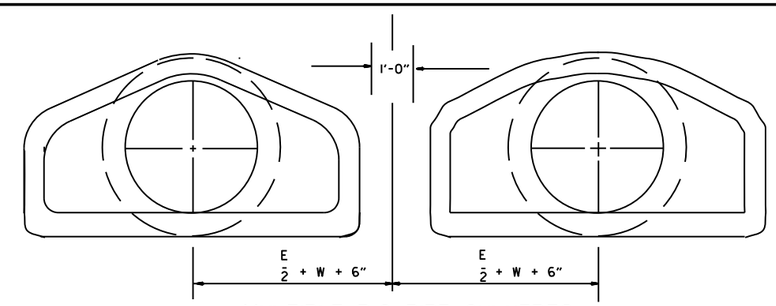

MULTIPLE R.C. PIPE CULVERTS

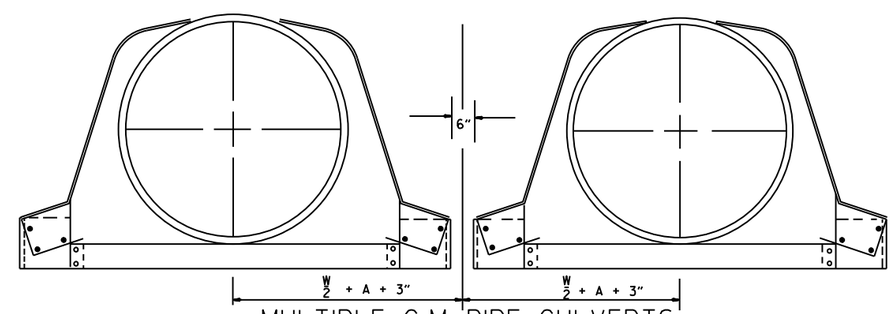

MULTIPLE C.M. PIPE CULVERTS

END SECTIONS FOR CORRUGATED METAL PIPE CULVERTS

DATE	REVISION	FILMED
10-18-96	REVISED ASTM REF. TO AASHTO	
5-15-80	REVISED DISTANCE BETWEEN MULTIPLE R.C.P. F.E.S.	664-5-15-80
7-14-78	C.M. ARCH SIZES TO CONFORM WITH AASHTO SIZES	752-7-14-78
8-22-75	ADDED MULTIPLE PIPE CULVERTS	517-8-22-75
12-5-74	REMOVED NOTE RE REINF. FOR R.C. F.E.S.	500-12-5-74
5-24-73	CMP END SECTION, SHOW PIPE PAY LENGTH	627-5-24-73
10-2-72	REVISED AND REDRAWN	760-10-2-72

ARKANSAS STATE HIGHWAY COMMISSION

FLARED END SECTION

STANDARD DRAWING FES-2

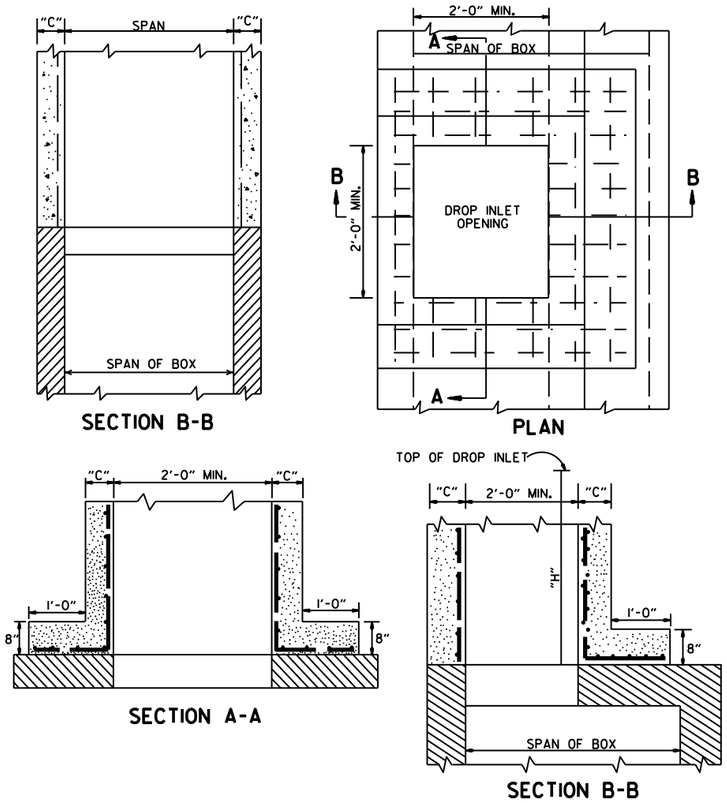

METHOD OF CONSTRUCTING DROP INLET ON EXISTING R.C. BOX CULVERT

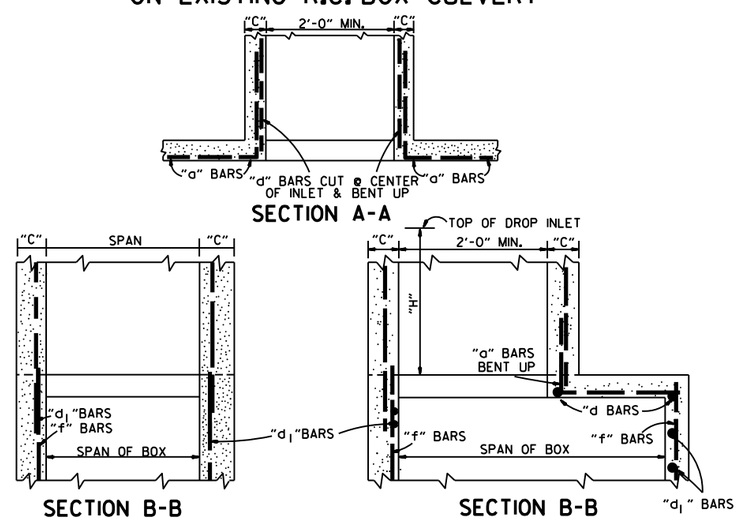

METHOD OF CONSTRUCTING DROP INLET ON NEW R.C. BOX CULVERT

NOTE: "C" DIMENSIONS AND REINFORCING BAR SIZES, SHALL CONFORM TO THOSE SHOWN ON STANDARD DRAWING FOR DROP INLET.

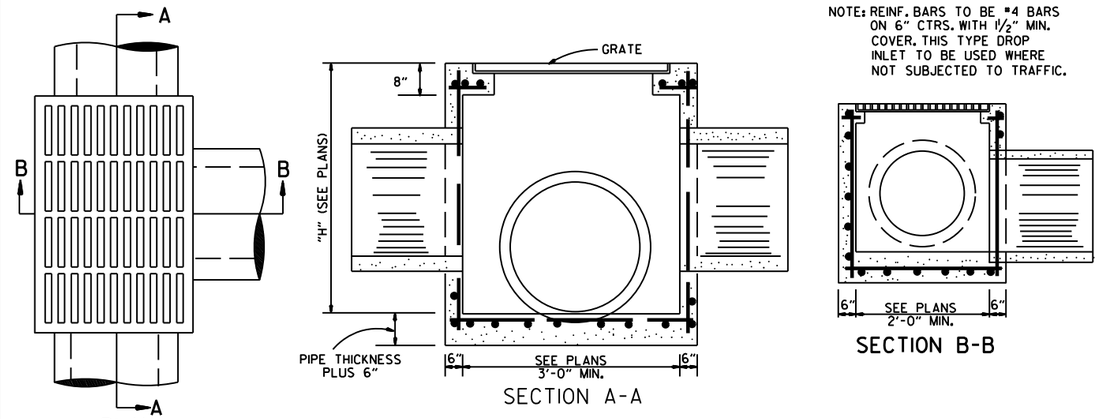

DROP INLET (TYPE E)

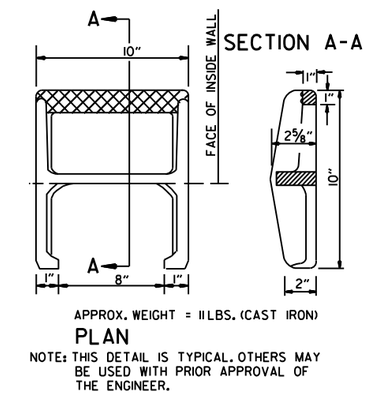

NOTE: THIS DETAIL IS TYPICAL. OTHERS MAY BE USED WITH PRIOR APPROVAL OF THE ENGINEER.

DETAIL OF STEP FOR DROP INLET

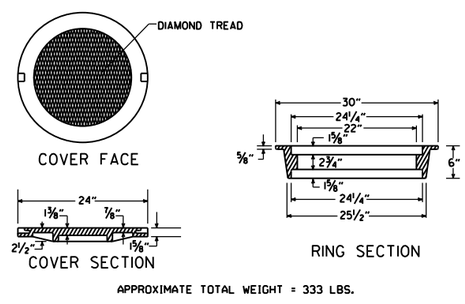

APPROXIMATE TOTAL WEIGHT = 333 LBS.

HEAVY DUTY RING & COVER

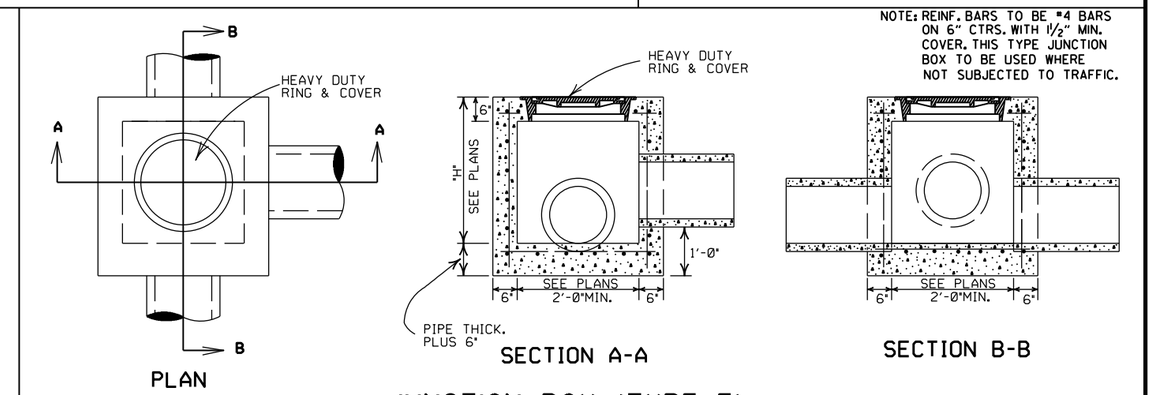

JUNCTION BOX (TYPE E)

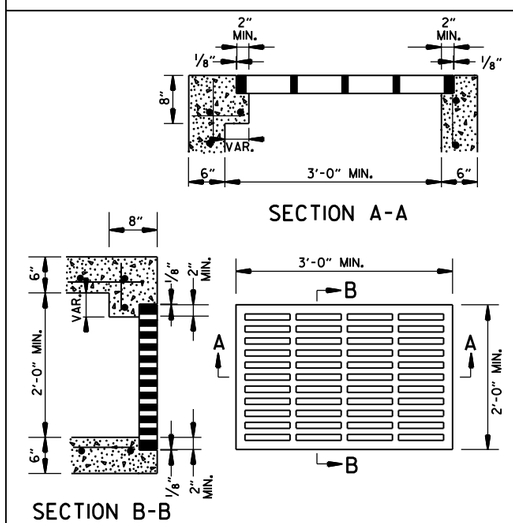

APPROXIMATE MINIMUM WATERWAY OPENING = 260 SQ. IN.

GRATE FOR TYPE E DROP INLET

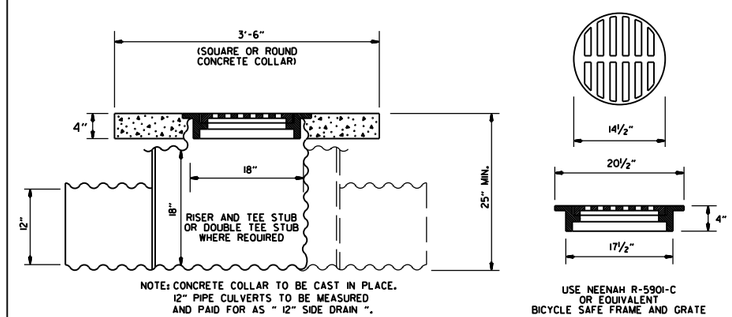

DETAIL OF YARD DRAIN

GENERAL NOTES:

1. ALL EXPOSED CORNERS SHALL BE ¾" CHAMFERED.
2. STEPS SHALL BE INSTALLED ON 16" CENTERS ON ALL INLETS 4'-0" HIGH OR OVER, OR AS APPROVED BY THE ENGINEER.
3. EXPANSION JOINT MATERIAL SHALL BE ¾" PREFORMED FIBER.
4. GRATE OR GRATE AND FRAME SHALL BE CONSTRUCTED OF CAST IRON AND SHALL CONFORM TO THE REQUIREMENTS OF THE STANDARD SPECIFICATIONS FOR GRAY IRON CASTINGS AASHTO M 105 CLASS 35B. GRATE MAY BE USED WITHOUT FRAME.
5. GRATE AND FRAME SHALL NOT BE PAINTED.
6. GRATE SHALL BE BICYCLE SAFE.
7. HEAVY DUTY RING SHALL ALWAYS BE INSTALLED WITH FLANGE ON TOP.
8. HEAVY DUTY RING AND COVER SHALL BE CONSTRUCTED OF CAST IRON AND SHALL CONFORM TO THE REQUIREMENTS OF THE STANDARD SPECIFICATIONS FOR GRAY IRON CASTINGS AASHTO M105 CLASS 35B & AASHTO M306.
9. HEAVY DUTY RING AND COVER SHALL NOT BE PAINTED.
10. DIMENSIONS SHOWN FOR RING AND COVER ARE TYPICAL. THE CONTRACTOR MAY SUBSTITUTE SIMILAR CASTINGS WITH THE APPROVAL OF THE ENGINEER. REQUESTING APPROVAL FOR CASTING DESIGNS MAY BE MADE BY REFERRING TO PREVIOUSLY APPROVED DRAWINGS.

DATE REV.	REVISION	DATE FILMED
11-16-01	ADDED NOTE 10	
1-12-00	REVISED HEAVY DUTY RING & COVER	
7-02-98	CHANGED GRATE DETAIL. DELETED DI(TYPE D), REPLACED RING & COVER W/HEAVY DUTY RING & COVER, ADDED JUNCTION BOX (TYPE E)	
6-26-97	ADDED DIMENSION TO TYPE IV-A	
10-18-96	ADDED DETAIL OF YARD DRAIN	
8-15-91	DELETE TYPE IV GRATE	
7-15-88	REVISED STEP DETAIL	
5-20-83	REVISED DETAILS OF GRATES (TYPE IV & IV-A)	
2-4-83	ADDED GENERAL NOTE NO. 4	
3-2-81	ADDED TYPE IV-A GRATE	
5-22-74	DELETED INLET (TYPE F) & GRATE (TYPE III)	
10-2-72	REVISED AND REDRAWN	

ARKANSAS STATE HIGHWAY COMMISSION

DETAILS OF DROP INLETS & JUNCTION BOXES

STANDARD DRAWING FPC-9

NOTE: WHEN AN INLET IS PLACED ADJACENT TO CONCRETE PAVEMENT, THE GUTTER DEPRESSION SHALL BE FORMED IN CONCRETE PAVEMENT.

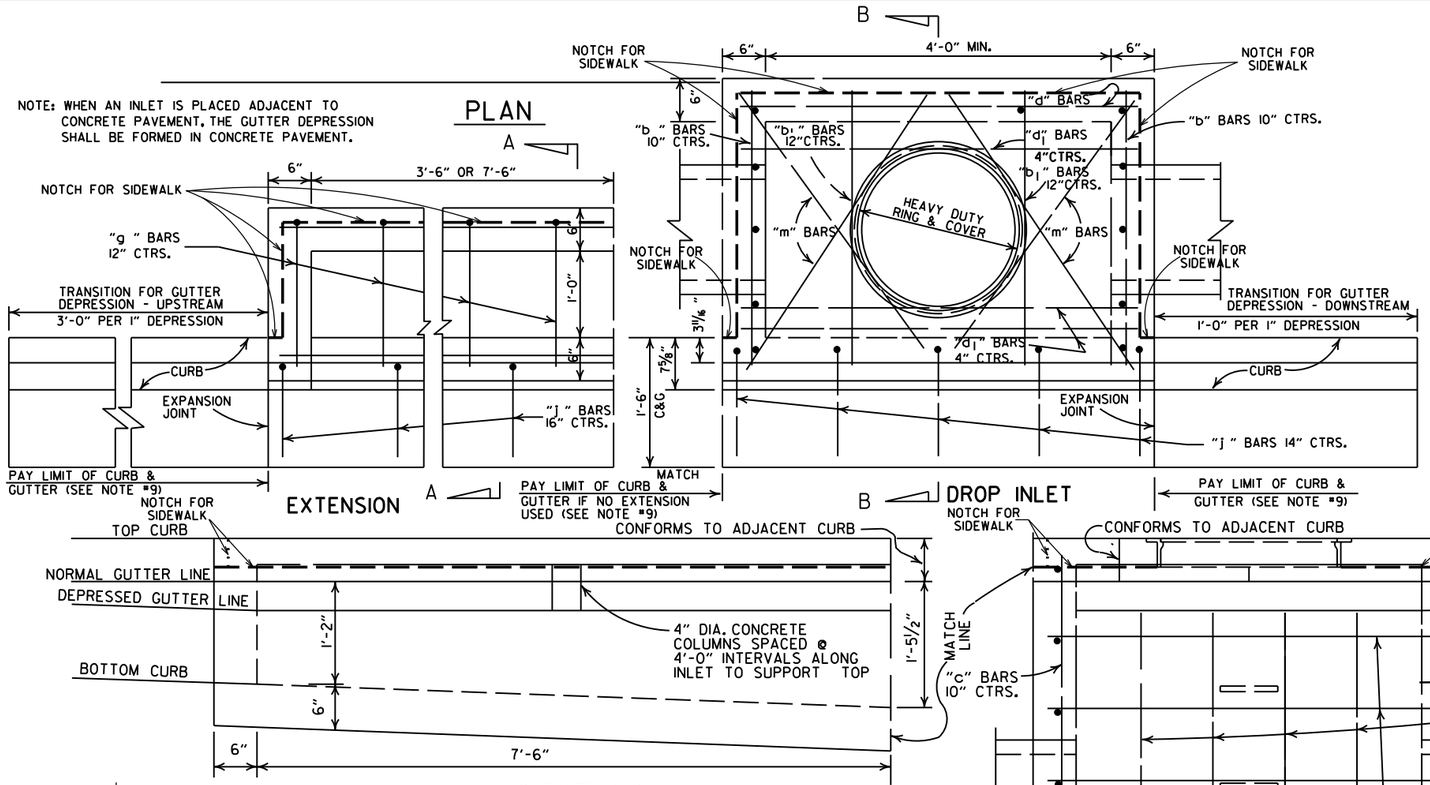

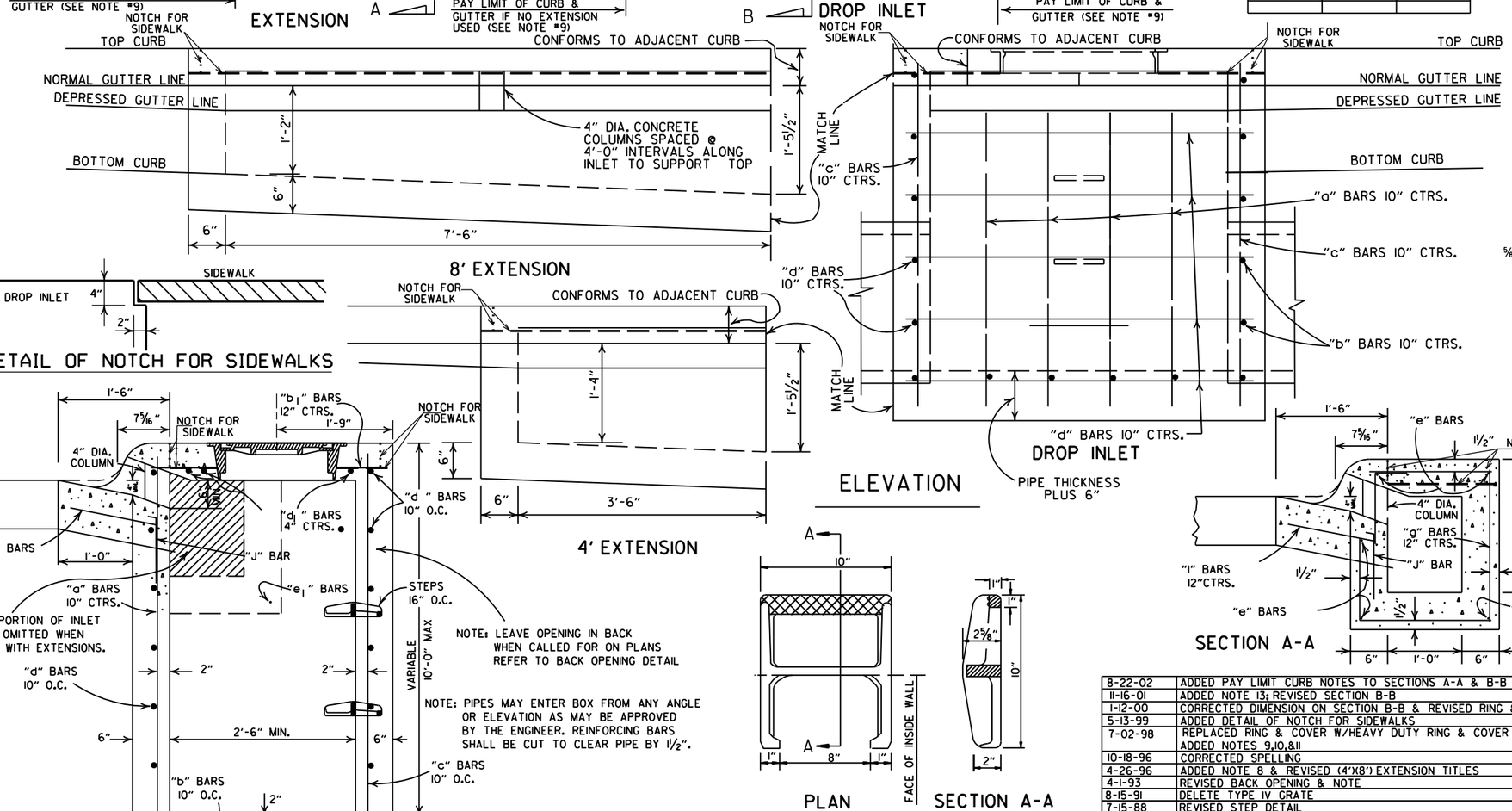

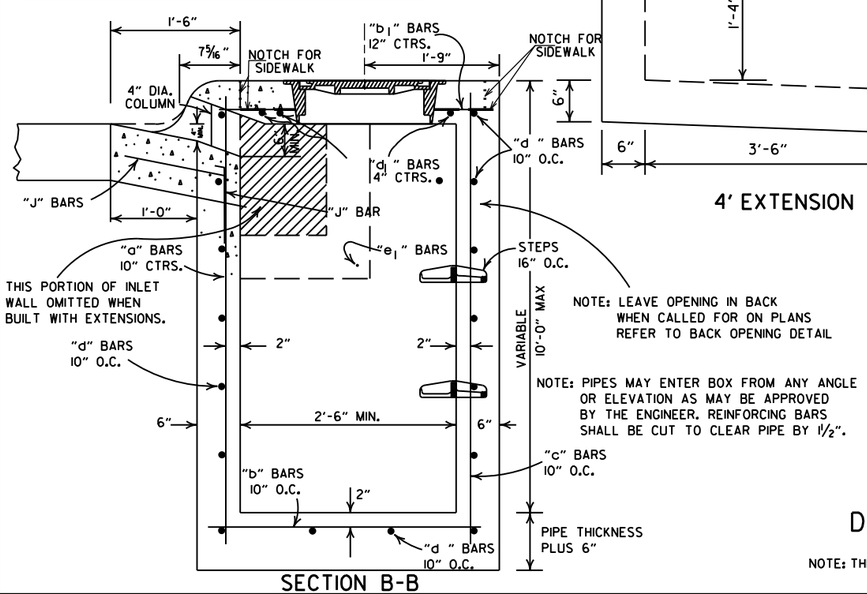

NOTE: LEAVE OPENING IN BACK WHEN CALLED FOR ON PLANS REFER TO BACK OPENING DETAIL

NOTE: PIPES MAY ENTER BOX FROM ANY ANGLE OR ELEVATION AS MAY BE APPROVED BY THE ENGINEER. REINFORCING BARS SHALL BE CUT TO CLEAR PIPE BY 1½".

DETAIL OF STEP FOR DROP INLET

APPROX. WEIGHT = 11 LBS. (CAST IRON)

NOTE: THIS DETAIL IS TYPICAL. OTHERS MAY BE USED WITH PRIOR APPROVAL OF THE ENGINEER.

4'-0" LENGTH DROP INLET / DROP INLET EXTENSION

PIPE SIZE	MIN. WIDTH	HEIGHT 5'-0" CLASS A CONC.	HEIGHT 5'-0" REINF. STEEL	PLUS OR MINUS PER LIN. FT. OF HEIGHT CLASS A CONC.	PLUS OR MINUS PER LIN. FT. OF HEIGHT REINF. STEEL	4'-0" CLASS A CONC.	4'-0" REINF. STEEL	8'-0" CLASS A CONC.	8'-0" REINF. STEEL
		CU. YDS.	POUNDS	CU. YDS.	POUNDS	CU. YDS.	POUNDS	CU. YDS.	POUNDS
18"	2'-6"	1.77	156	0.28	22	0.58	38	0.87	72
24"	2'-6"	1.79	156	0.28	22				
30"	3'-2"	2.39	205	0.30	26				
36"	3'-8"	2.63	236	0.32	28	DEDUCT FROM QUANTITY COMPUTED FOR EACH EXTENSION ADDED.			
42"	4'-4"	2.95	250	0.34	30				
48"	4'-10"	3.21	265	0.36	32				
						0.04	3		

NOTE: QUANTITIES ARE APPROXIMATE AND ARE SHOWN FOR BIDDER INFORMATION ONLY.

DEDUCT FROM QUANTITY COMPUTED FOR EACH PIPE ENTERING INLET

INSIDE DIA. PIPE	CLASS A CONC.	REINF. STEEL
INCHES	CU. YDS.	POUNDS
18	0.05	2
24	0.09	3
30	0.13	4
42	0.24	8

BAR DIAGRAM

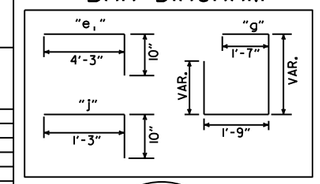

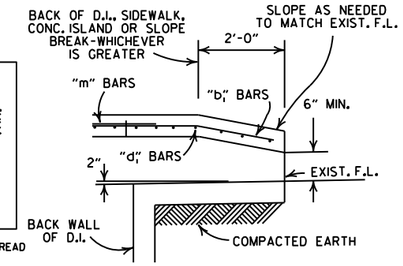

BACK OPENING

WHEN OPENING IN BACK IS CALLED FOR ON PLANS EXTEND OPENING AS SHOWN IN DETAIL. PAYMENT TO BE INCLUDED IN PRICE BID FOR DROP INLET (TYPE C).

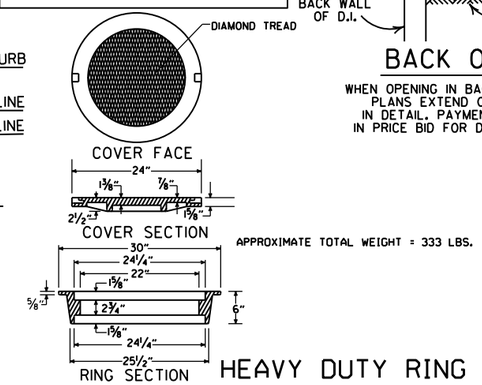

APPROXIMATE TOTAL WEIGHT = 333 LBS.

HEAVY DUTY RING & COVER

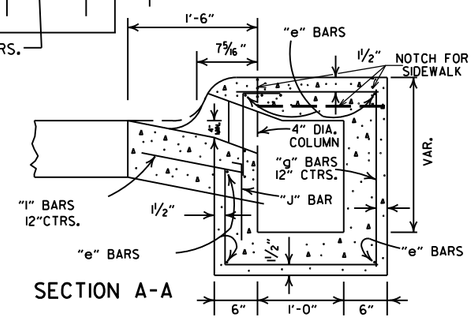

GENERAL NOTES:

1. ALL EXPOSED CORNERS TO HAVE ¾" CHAMFER.
2. STEPS SHALL BE INSTALLED IN ALL INLETS 4'-0" HIGH AND OVER OF AS APPROVED BY THE ENGINEER.
3. ALL REINF. BARS SHALL BE #4 AND HAVE 1½" COVER.
4. DROP INLETS AND EXTENSION ON CURVED SECTIONS SHALL CONFORM TO THE CURVATURE OF THE CURB.
5. THIS DROP INLET MAY BE CONSTRUCTED ON NEW OR EXISTING R.C. BOX CULVERT AS SHOWN ON F.P.C.-9.
6. WHEN PLANS CALL FOR DROP INLET OVER 10'-0" HIGH, FLOOR AND WALLS SHALL BE CONSTRUCTED AS SHOWN FOR TYPE "RM" DROP INLET (FPC-9D).
7. HEAVY DUTY RING SHALL ALWAYS BE INSTALLED WITH FLANGE ON TOP.
8. DURING CONSTRUCTION OF THE ROADWAY THE CONTRACTOR SHALL MAINTAIN DRAINAGE INTO OR AROUND THE DROP INLET AS APPROVED BY THE ENGINEER.
9. PAYMENT FOR CURB AND/OR CURB AND GUTTER WITHIN THE LIMITS OF DROP INLETS AND DROP INLET EXTENSIONS SHALL BE CONSIDERED INCLUDED IN PAYMENT MADE FOR DROP INLETS AND/OR DROP INLET EXTENSIONS.
10. HEAVY DUTY RING AND COVER SHALL BE CONSTRUCTED OF CAST IRON AND SHALL CONFORM TO THE REQUIREMENTS OF THE STANDARD SPECIFICATIONS FOR GRAY IRON CASTINGS AASHTO M105 CLASS 35B & AASHTO M306.
11. HEAVY DUTY RING AND COVER SHALL NOT BE PAINTED.
12. 4"×2" NOTCH SHALL BE FORMED IN ALL DROP INLETS TO SUPPORT SIDEWALK CONSTRUCTION. REFER TO DETAIL OF NOTCH FOR SIDEWALKS.
13. DIMENSIONS SHOWN FOR RING AND COVER ARE TYPICAL. THE CONTRACTOR MAY SUBSTITUTE SIMILAR CASTINGS WITH THE APPROVAL OF THE ENGINEER. REQUESTING APPROVAL FOR CASTING DESIGNS MAY BE MADE BY REFERRING TO PREVIOUSLY APPROVED DRAWINGS.

DATE REV.	REVISION	DATE FILMED
8-22-02	ADDED PAY LIMIT CURB NOTES TO SECTIONS A-A & B-B	
11-16-01	ADDED NOTE 13; REVISED SECTION B-B	
1-12-00	CORRECTED DIMENSION ON SECTION B-B & REVISED RING & COVER	
5-13-99	ADDED DETAIL OF NOTCH FOR SIDEWALKS	
7-02-98	REPLACED RING & COVER W/HEAVY DUTY RING & COVER ADDED NOTES 9,10,&11	
10-18-96	CORRECTED SPELLING	
4-26-96	ADDED NOTE 8 & REVISED (4')(8') EXTENSION TITLES	10-18-96
4-1-93	REVISED BACK OPENING & NOTE	
8-15-91	DELETE TYPE IV GRATE	
7-15-88	REVISED STEP DETAIL	
5-20-83	REVISED DETAILS OF GRATES (TYPE IV & IV-A)	
2-4-83	ADDED GENERAL NOTE NO. 4	
3-2-81	ADDED TYPE IV-A GRATE	
5-22-74	DELETED INLET (TYPE F) & GRATE (TYPE III)	
10-2-72	REVISED AND REDRAWN	

ARKANSAS STATE HIGHWAY COMMISSION

DETAILS OF DROP INLETS (TYPE C)

STANDARD DRAWING FPC-9E

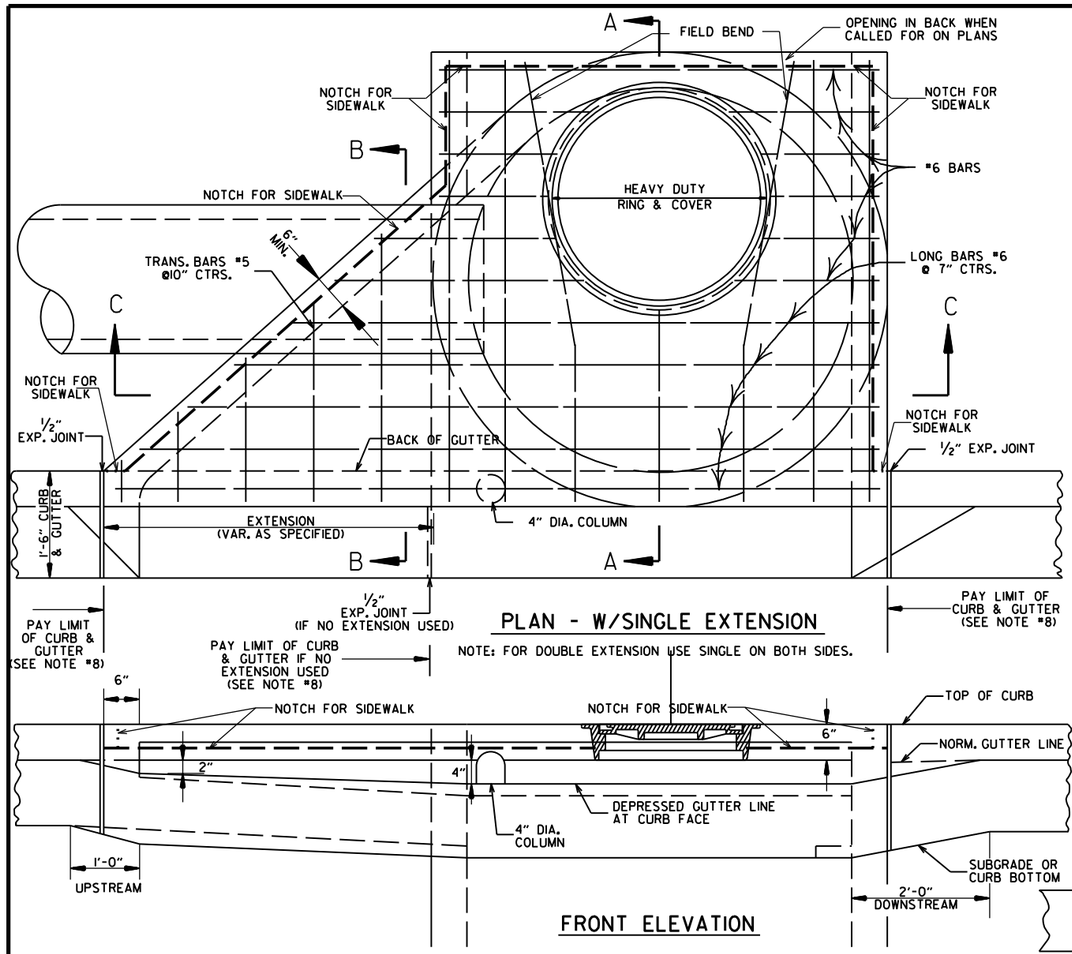

PLAN - W/SINGLE EXTENSION

NOTE: FOR DOUBLE EXTENSION USE SINGLE ON BOTH SIDES.

FRONT ELEVATION

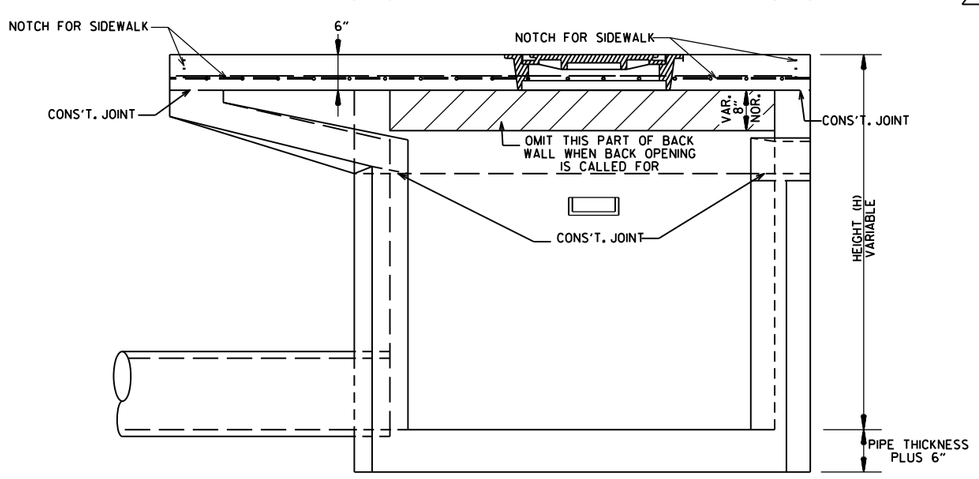

SECTION C-C

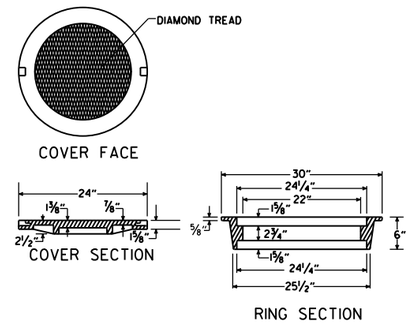

APPROXIMATE TOTAL WEIGHT = 333 LBS.

HEAVY DUTY RING & COVER

1. HEAVY DUTY RING AND COVER SHALL BE CONSTRUCTED OF CAST IRON AND SHALL CONFORM TO THE REQUIREMENTS OF THE STANDARD SPECIFICATIONS FOR GRAY IRON CASTINGS AASHTO M105 CLASS 35B & AASHTO M306.
2. HEAVY DUTY RING AND COVER SHALL NOT BE PAINTED.
3. HEAVY DUTY RING SHALL ALWAYS BE INSTALLED WITH FLANGE ON TOP.

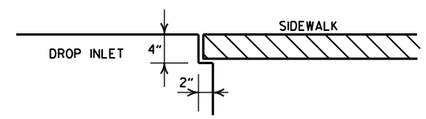

DETAIL OF NOTCH FOR SIDEWALKS

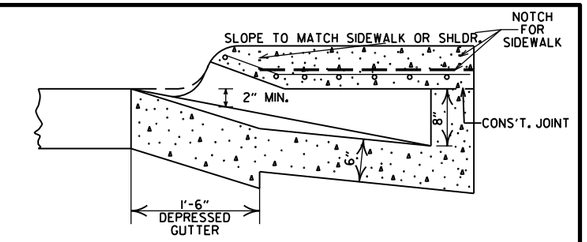

SECTION B-B

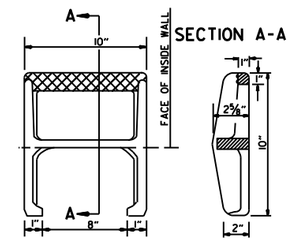

SECTION A-A

APPROX. WEIGHT = 11 LBS. (CAST IRON)

PLAN

NOTE: THIS DETAIL IS TYPICAL. OTHERS MAY BE USED WITH PRIOR APPROVAL OF THE ENGINEER.

DETAIL OF STEP FOR DROP INLET

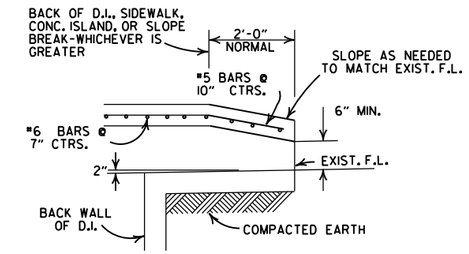

BACK OPENING

WHEN OPENING IN BACK IS CALLED FOR ON PLANS EXTEND OPENING AS SHOWN IN DETAIL. PAYMENT TO BE INCLUDED IN PRICE BID FOR DROP INLET (TYPE MO).

GENERAL NOTES:

1. ALL EXPOSED CORNERS TO HAVE 3/4" CHAMFER.
2. STEPS SHALL BE INSTALLED IN ALL INLETS 4'-0" HIGH AND OVER OR AS DIRECTED BY THE ENGINEER.
3. ALL REINFORCING BARS SHALL BE GRADE 60 AND HAVE MIN. 1 1/2" COVER.
4. DROP INLETS AND EXTENSION ON CURVED SECTIONS SHALL CONFORM TO THE CURVATURE OF THE CURB.
5. 4" DIA. COLUMNS SPACED AT MAX. 4'-0" INTERVALS SHALL BE INSTALLED ALONG INLET AND EXTENSION TO SUPPORT TOP.
6. BASE AND INLET WALLS SHALL BE CAST MONOLITHICALLY.
7. THE THROAT SHALL BE CAST INTEGRALLY WITH THE GUTTER.
8. PAYMENT FOR CURB AND/OR CURB AND GUTTER WITHIN THE LIMITS OF DROP INLETS AND DROP INLET EXTENSIONS SHALL BE CONSIDERED INCLUDED IN PAYMENT MADE FOR DROP INLETS AND/OR DROP INLET EXTENSIONS.
9. PIPES MAY ENTER DROP INLET FROM ANY ANGLE OR ELEVATION AS MAY BE APPROVED BY THE ENGINEER.
10. APPROPRIATE SIZE TYPE C DROP INLETS MAY BE SUBSTITUTED FOR TYPE MO DROP INLETS AS APPROVED BY THE ENGINEER. PAYMENT TO BE AS DROP INLET (TYPE MO).
11. DURING CONSTRUCTION OF THE ROADWAY THE CONTRACTOR SHALL MAINTAIN DRAINAGE INTO OR AROUND THE DROP INLET AS APPROVED BY THE ENGINEER.
12. 4"x2" NOTCH SHALL BE FORMED IN ALL DROP INLETS TO SUPPORT SIDEWALK CONSTRUCTION. REFER TO DETAIL OF NOTCH FOR SIDEWALKS.
13. DIMENSIONS SHOWN FOR RING AND COVER ARE TYPICAL. THE CONTRACTOR MAY SUBSTITUTE SIMILAR CASTINGS WITH THE APPROVAL OF THE ENGINEER. REQUESTING APPROVAL FOR CASTING DESIGNS MAY BE MADE BY REFERRING TO PREVIOUSLY APPROVED DRAWINGS.

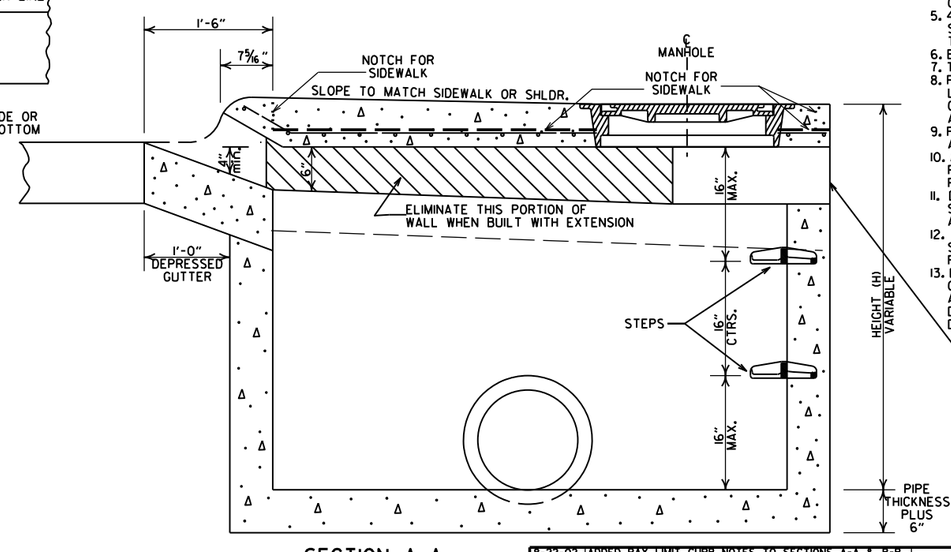

SECTION A-A

DIA. OF D.I.	DIA. OF OUTLET PIPE	MINIMUM WALL THICKNESS CAST IN PLACE	MINIMUM WALL THICKNESS PRECAST
4' I.D.	12" THRU 27"	6"	5"
5' I.D.	30" THRU 42"	8"	6"
6' I.D.	48" THRU 54"	8"	7"

DATE	REVISIONS	DATE FILMED
8-22-02	ADDED PAY LIMIT CURB NOTES TO SECTIONS A-A & B-B	
11-16-01	ADDED NOTE 13	
1-12-00	REVISED HEAVY DUTY RING & COVER	
5-13-99	ADDED NOTCH DETAIL FOR SIDEWALKS	
7-02-98	REP. NOTE 8, REM. PLAN DET., REV. PICTURE FOR NEW RING & COVER, ADDED HEAVY DUTY RING & COVER AND DETAIL OF STEP FOR DROP INLET	
4-26-96	ADDED NOTE 11, ADJ. OPENING DIMENSION	
10-12-95	CORRECTED #6 BAR SPACING	
7-20-95	CORRECTED DIAMETER OF D.I. IN BOX	
2-2-95	TYPE C TO MO (OPEN. BACK DETAIL)	
11-3-94	REVISED GENERAL NOTES	11-3-94
4-1-93	REV. BACK OPEN. DETAIL & NOTE	4-1-93
8-16-91	REVISED NOTES 11,12 & ADDED BK.OPEN DETAIL	8-15-91
11-30-89	ADDED NOTE NO.12	11-30-89
3-23-89	ADDED NOTE & MINIMUM WALL THICKNESS	513-3-23-89
7-15-88	ADDED EXTEND NOTE TO SECTION A-A	639-7-15-88
1-14-87	MODIFIED WALL THICKNESS	783-1-14-87
6-12-87	ISSUED	4-6-12-87

ARKANSAS STATE HIGHWAY COMMISSION

DETAILS OF DROP INLET (TYPE MO)

STANDARD DRAWING FPC-9M

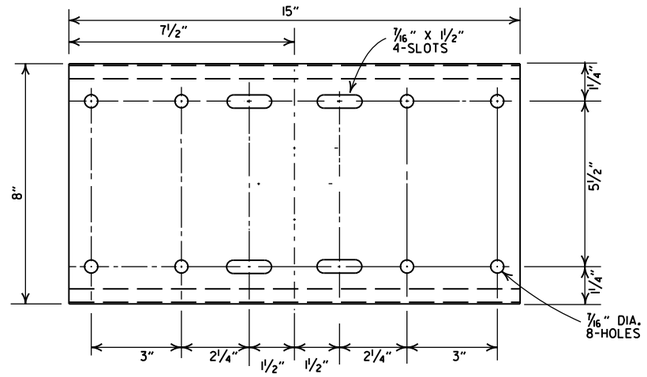

SHELF

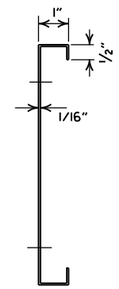

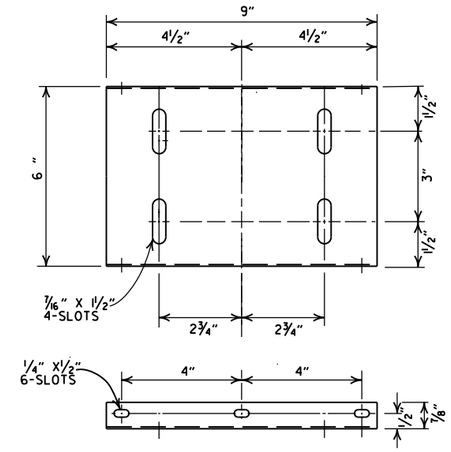

PLATFORM

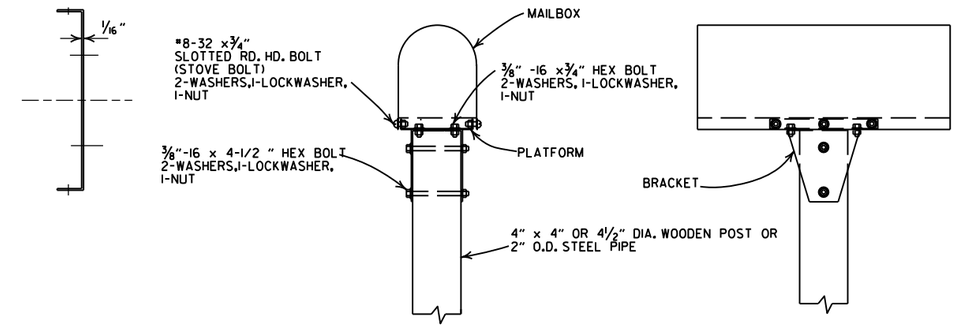

SINGLE INSTALLATION

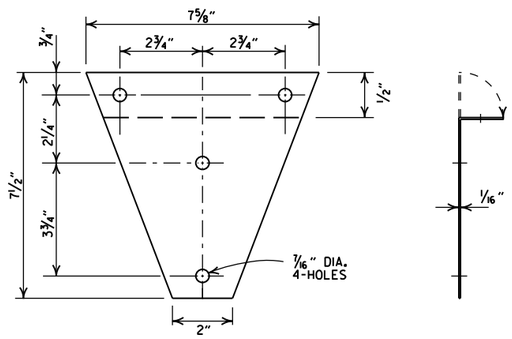

BRACKET

GENERAL NOTES

1. MAILBOX POSTS MAY BE WOOD OR METAL. WOOD POSTS SHALL BE PRESSURE TREATED FOR GROUND CONTACT IN ACCORDANCE WITH SECTION 637.02 OF THE STANDARD SPECIFICATIONS.
2. ANTI-TWIST PLATES SHALL BE USED ONLY ON METAL POSTS.
3. MAILBOX SHELF, BRACKET & PLATFORM SHALL BE GALVANIZED OR PAINTED STEEL, HOWEVER TREATED WOOD MAY BE USED WITH WOODEN POSTS. THE WOODEN SHELF, BRACKET & PLATFORM SHALL BE A MINIMUM OF ¾" THICK AND SHALL BE ASSEMBLED WITH BOLTS OF THE APPROPRIATE LENGTH WITH SIX 8 X¾" FLATHEAD WOOD SCREWS USED TO ATTACH THE MAILBOX TO THE PLATFORM.
4. THE MAILBOX SHELF AND PLATFORM THAT IS SHOWN IS FOR STANDARD SIZE MAILBOXES. THE SHELF AND PLATFORM SIZE SHALL BE MODIFIED TO FIT MAILBOXES OF A DIFFERENT SIZE.
5. METAL PIPE FOR MAILBOX SUPPORT SHALL BE 2" OUTSIDE DIAMETER STEEL WITH A WALL THICKNESS OF 0.145" AND A WEIGHT OF 2.72 LBS PER FT. OUTSIDE DIAMETER AND WEIGHT SHALL HAVE A TOLERANCE OF +/- 5% ACCORDING TO AASHTO M 181.
6. MAILBOX SUPPORT SYSTEM DIFFERING FROM THOSE SHOWN MAY BE USED, PROVIDED THEY ARE ON THE ARDOT QUALIFIED PRODUCTS LIST FOR MAILBOX SUPPORTS.

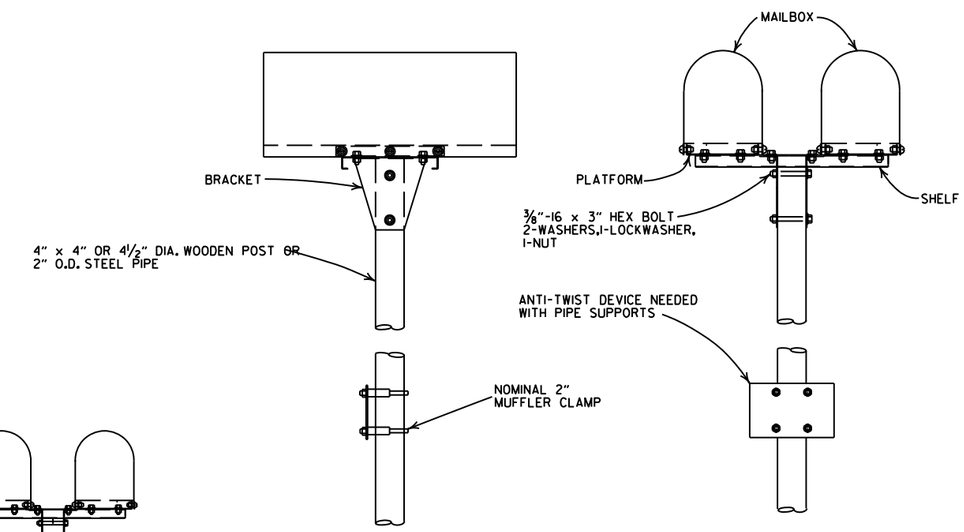

DOUBLE INSTALLATION

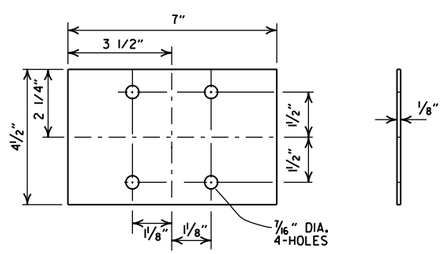

ANTI-TWIST PLATE

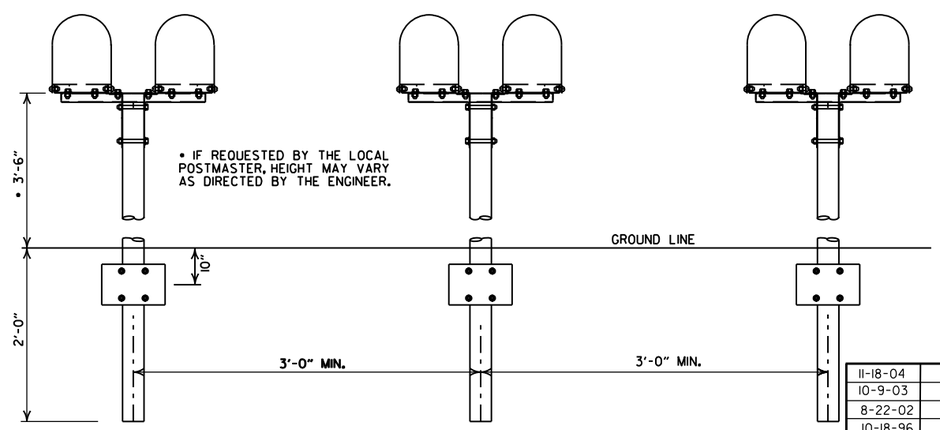

SPACING FOR MULTIPLE POST INSTALLATION

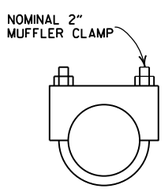

CLAMP

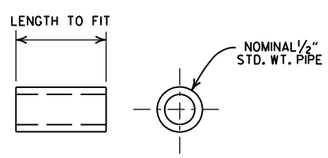

SPACER

DATE	FILMED	REVISION
11-18-04		REVISED NOTES
10-9-03		REVISED NOTE 6
8-22-02		REVISED NOTE 6
10-18-96		CORRECTED AASHTO
10-1-92		CORRECTED SPELLING
9-26-91		NEW PHONE NUMBER
8-15-91		ADDED NOTE
11-30-89		ADJUSTED HEIGHT & ADDED NOTE
2-16-89		DELETED SLOTS FROM SHELF & PLTF
11-17-88	10-1-92	ADJUSTED DIMENSIONS OF STEEL POSTS
7-15-88	20-7-15-88	ISSUED

ARKANSAS STATE HIGHWAY COMMISSION

MAILBOX DETAILS

STANDARD DRAWING MB-1

REINFORCED CONCRETE ARCH PIPE DIMENSIONS

EQUIV. DIA.	SPAN		RISE	
	AASHTO M 206	ARDOT NOMINAL	AASHTO M 206	ARDOT NOMINAL
INCHES	INCHES			
15	18	18	11	11
18	22	22	13½	14
21	26	26	15½	16
24	28½	29	18	18
30	36¼	36	22½	23
36	43⅜	44	26 5/16	27
42	51⅛	51	31 5/16	31
48	58½	59	36	36
54	65	65	40	40
60	73	73	45	45
72	88	88	54	54
84	102	102	62	62
90	115	115	72	72
96	122	122	77½	77
108	138	138	87⅛	87
120	154	154	96⅞	97
132	168¾	169	106½	107

THE MEASURED SPAN AND RISE SHALL NOT VARY MORE THAN ± 2 PERCENT FROM THE VALUES SPECIFIED BY AASHTO M206.

REINFORCED CONCRETE HORIZONTAL ELLIPTICAL PIPE DIMENSIONS

EQUIV. DIA.	AASHTO M 207	
	SPAN	RISE
INCHES	INCHES	
18	23	14
24	30	19
27	34	22
30	38	24
33	42	27
36	45	29
39	49	32
42	53	34
48	60	38
54	68	43
60	76	48
66	83	53
72	91	58
78	98	63
84	106	68

THE MEASURED SPAN AND RISE SHALL NOT VARY MORE THAN ± 2 PERCENT FROM THE VALUES SPECIFIED BY AASHTO M207.

CONSTRUCTION SEQUENCE

1. PLACE STRUCTURAL BEDDING MATERIAL TO GRADE. DO NOT COMPACT.
2. INSTALL PIPE TO GRADE.
3. COMPACT STRUCTURAL BEDDING OUTSIDE THE MIDDLE THIRD OF THE PIPE.
4. PLACE AND COMPACT THE HAUNCH AREA UP TO THE MIDDLE OF THE PIPE.
5. COMPLETE BACKFILL ACCORDING TO SUBSECTION 606.03.(f)(1).

NOTE: HAUNCH AND STRUCTURAL BEDDING MATERIAL WILL NOT BE PAID FOR SEPARATELY, BUT COMPENSATION WILL BE CONSIDERED TO BE INCLUDED IN THE PRICE BID PER LINEAR FOOT OF CONCRETE PIPE.

- LEGEND -

D_i = NORMAL INSIDE DIAMETER OF PIPE
D_o = OUTSIDE DIAMETER OF PIPE
H = FILL COVER HEIGHT OVER PIPE (FEET)
MIN. = MINIMUM
= UNDISTURBED SOIL

INSTALLATION TYPE	MATERIAL REQUIREMENTS FOR HAUNCH AND STRUCTURAL BEDDING
TYPE 1	AGGREGATE BASE COURSE (CLASS 5 OR CLASS 7)
TYPE 2	SELECTED MATERIALS (CLASS SM-1, SM-2, OR SM-4) OR TYPE 1 INSTALLATION MATERIAL*
TYPE 3**	AASHTO CLASSIFICATION A-1 THRU A-6 SOIL OR TYPE 1 OR 2 INSTALLATION MATERIAL

* SM-3 WILL NOT BE ALLOWED.

** MATERIALS SHALL NOT INCLUDE ORGANIC MATERIALS OR STONES LARGER THAN 3 INCHES.

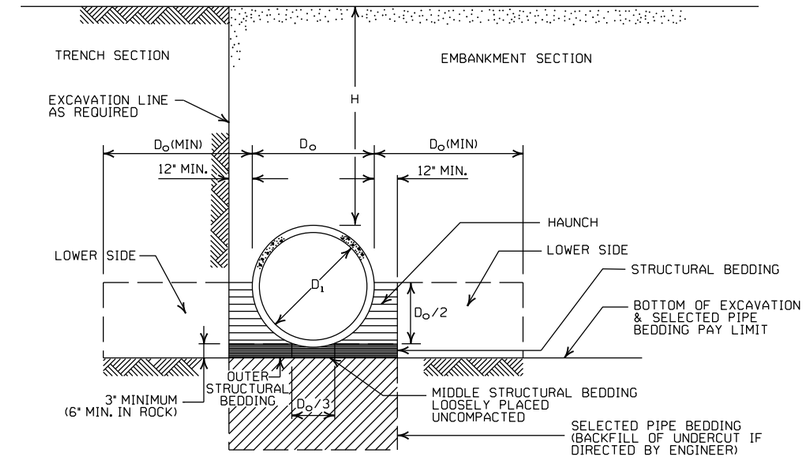

EMBANKMENT AND TRENCH INSTALLATIONS

1. MATERIAL IN THE HAUNCH AND OUTER STRUCTURAL BEDDING SHALL BE COMPACTED TO 95% OF THE MAXIMUM DENSITY ACCORDING TO THE TYPE OR CLASS OF MATERIAL USED.
2. FOR TRENCHES WITH WALLS OF NATURAL SOIL, THE DENSITY OF THE SOIL IN THE LOWER SIDE ZONE SHALL BE AS FIRM AS THE 95% DENSITY REQUIRED FOR THE HAUNCH. IF THE EXISTING SOIL DOES NOT MEET THIS CRITERIA, IT SHALL BE REMOVED AND RECOMPACTED TO 95% OF THE MAXIMUM DENSITY ACCORDING TO THE TYPE OF MATERIAL USED.
3. FOR EMBANKMENTS, THE MATERIAL IN THE LOWER SIDE ZONE SHALL BE COMPACTED TO 95% OF THE MAXIMUM DENSITY ACCORDING TO THE TYPE OR CLASS OF MATERIAL USED.

MINIMUM HEIGHT OF FILL "H" OVER CIRCULAR R.C. PIPE CULVERTS

	CLASS OF PIPE			
	CLASS III		CLASS IV	CLASS V
INSTALLATION TYPE	TYPE 1 OR 2	TYPE 3	ALL	ALL
PIPE ID (IN.)	FEET			
12-15	2	2.5	2	1
18-24	2.5	3	2	1
27-33	3	4	2	1
36-42	3.5	5	2	1
48	4.5	5.5	2	1
54-60	5	7	2	1
66-78	6	8	2	1
84-108	7.5	8	2	1

NOTE: FOR MINIMUM COVER VALUES, "H" SHALL INCLUDE A MINIMUM OF 12" OF PAVEMENT AND/OR BASE.

MAXIMUM HEIGHT OF FILL "H" OVER CIRCULAR R.C. PIPE CULVERTS

INSTALLATION TYPE	CLASS OF PIPE		
	CLASS III	CLASS IV	CLASS V
	FEET		
TYPE 1	21	32	50
TYPE 2	16	25	39
TYPE 3	12	20	30

NOTE: IF FILL HEIGHT EXCEEDS 50 FEET, A SPECIAL DESIGN CONCRETE PIPE WILL BE REQUIRED USING TYPE 1 INSTALLATION.

GENERAL NOTES

1. CONCRETE PIPE CULVERT CONSTRUCTION SHALL CONFORM TO ARKANSAS DEPARTMENT OF TRANSPORTATION STANDARD SPECIFICATIONS FOR HIGHWAY CONSTRUCTION (CURRENT EDITION), WITH APPLICABLE SUPPLEMENTAL SPECIFICATIONS AND SPECIAL PROVISIONS. UNLESS OTHERWISE NOTED IN THE PLANS, SECTION AND SUBSECTION REFER TO THE STANDARD CONSTRUCTION SPECIFICATIONS.
2. CONCRETE PIPE CULVERT DESIGN SHALL CONFORM TO AASHTO LRFD BRIDGE DESIGN SPECIFICATIONS, FIFTH EDITION (2010) WITH 2010 INTERIMS.
3. ALL PIPE SHALL CONFORM TO SECTION 606. CIRCULAR R.C. PIPE CULVERTS SHALL CONFORM TO AASHTO M170. R.C. ARCH PIPE CULVERTS SHALL CONFORM TO AASHTO M206 AND HORIZONTAL ELLIPTICAL PIPE CULVERTS SHALL CONFORM TO AASHTO M207.
4. ALL PIPE SHALL BE PROTECTED DURING CONSTRUCTION BY A COVER SUFFICIENT TO PREVENT DAMAGE FROM PASSAGE OF EQUIPMENT.
5. THE MINIMUM TRENCH WIDTH SHALL BE THE OUTSIDE DIAMETER OF THE PIPE PLUS 24 INCHES. THE MAXIMUM ALLOWABLE TRENCH WIDTH SHALL BE THE MINIMUM WIDTH PRACTICABLE FOR WORKING CONDITIONS.
6. MULTIPLE PIPE CULVERTS SHALL BE INSTALLED WITH A MINIMUM CLEARANCE OF 24 INCHES BETWEEN STRINGS OF PIPE. REFER TO STD. DWG. FES-2 FOR MINIMUM CLEARANCE WHERE FLARED END SECTIONS ARE USED.
7. IMPERVIOUS MATERIAL SHOULD BE PLACED AS DIRECTED BY THE ENGINEER AT THE ENDS OF THE CULVERT TO PREVENT LOSS OF STRUCTURAL BEDDING WHEN PERVIOUS MATERIAL IS USED FOR STRUCTURAL BEDDING AND/OR BACKFILL.
8. NOT MORE THAN ONE LIFTING HOLE MAY BE PROVIDED IN CONCRETE PIPE TO FACILITATE HANDLING. HOLE MAY BE CAST IN PLACE, CUT INTO THE FRESH CONCRETE AFTER FORMS ARE REMOVED, OR DRILLED. THE HOLE SHALL NOT BE MORE THAN TWO INCHES IN DIAMETER OR TWO INCHES SQUARE. CUTTING OR DISPLACEMENT OF REINFORCEMENT WILL NOT BE PERMITTED. SPALLED AREAS AROUND THE HOLE SHALL BE REPAIRED IN A WORKMANLIKE MANNER. LIFTING HOLE SHALL BE FILLED WITH MORTAR, CONCRETE, OR OTHER METHOD AS APPROVED BY THE ENGINEER.
9. WHEN DIRECTED BY THE ENGINEER, UNSUITABLE MATERIAL THAT IS ENCOUNTERED AT THE BOTTOM OF THE EXCAVATED TRENCH (BELOW THE AREA IDENTIFIED AS "STRUCTURAL BEDDING" ABOVE) WILL BE EXCAVATED AND REPLACED WITH SELECTED PIPE BEDDING. THE QUANTITY OF MATERIAL REQUIRED TO BACKFILL THE UNDERCUT AREA UP TO THE SELECTED PIPE BEDDING PAY LIMIT DESIGNATED ABOVE WILL BE MEASURED AND PAID FOR AS "SELECTED PIPE BEDDING."
10. WHEN THE EXISTING MATERIAL EXCAVATED FOR THE PIPE TRENCH IS DETERMINED BY THE ENGINEER TO BE UNSUITABLE FOR BACKFILLING THE PIPE (ABOVE THE AREA IDENTIFIED ABOVE AS THE HAUNCH), BORROW MATERIAL OR MATERIAL FROM THE ROADWAY EXCAVATION WILL BE USED TO BACKFILL THE PIPE. IF SUITABLE MATERIAL IS NOT AVAILABLE, THE ENGINEER MAY AUTHORIZE THE USE OF "SELECTED PIPE BACKFILL."

MINIMUM HEIGHT OF FILL "H" OVER R.C. ARCH & HORIZONTAL ELLIPTICAL PIPE CULVERTS

INSTALLATION TYPE	CLASS OF PIPE	
	CLASS III	CLASS IV
	FEET	
TYPE 2 OR TYPE 3	2.5	1.5

NOTE: TYPE 1 INSTALLATION WILL NOT BE ALLOWED FOR ARCH & HORIZONTAL ELLIPTICAL PIPE CULVERTS.

NOTE: FOR MINIMUM COVER VALUES, "H" SHALL INCLUDE A MINIMUM OF 12" OF PAVEMENT AND/OR BASE.

MAXIMUM HEIGHT OF FILL "H" OVER R.C. ARCH & HORIZONTAL ELLIPTICAL PIPE CULVERTS

INSTALLATION TYPE	CLASS OF PIPE	
	CLASS III	CLASS IV
	FEET	
TYPE 2	13	21
TYPE 3	10	16

NOTE: TYPE 1 INSTALLATION WILL NOT BE ALLOWED FOR ARCH & HORIZONTAL ELLIPTICAL PIPE CULVERTS.

DATE	REVISION	DATE FILMED
2-27-14	REVISED GENERAL NOTE 1.	
12-15-11	REVISED FOR LRFD DESIGN SPECIFICATIONS	
5-18-00	REVISED TYPE 3 BEDDING & ADDED NOTE	
3-30-00	REVISED INSTALLATIONS	
11-06-97	ISSUED	

ARKANSAS STATE HIGHWAY COMMISSION

CONCRETE PIPE CULVERT FILL HEIGHTS & BEDDING

STANDARD DRAWING PCC-1

CORRUGATED STEEL PIPE (ROUND)

PIPE DIAMETER (INCHES)	① MINUMUM COVER TOP OF PIPE TO TOP OF GROUND "H" (FEET)	MAX. FILL HEIGHT "H" ABOVE TOP OF PIPE (FEET)				
		METAL THICKNESS (INCHES)				
		0.064	0.079	0.109	0.138	0.168
2⅔ INCH BY ½ INCH CORRUGATION RIVETED, WELDED, OR HELICAL LOCK-SEAM						
12	1	84	91			
15	1	67	73			
18	1	56	61			
24	1	42	46	59		
30	2	34	36	47		
36	2		30	39	41	
42	2		43	67	70	73
48	2		37	58	61	64
② 3 INCH BY 1 INCH OR 5 INCH BY 1 INCH CORRUGATION RIVETED, WELDED, BOLTED, OR HELICAL LOCK-SEAM						
36	1	48	60	88	111	118
42	1	41	51	72	90	102
48	1	36	45	64	77	85
54	2	32	40	59	71	79
60	2	29	36	53	64	71
66	2	26	33	47	58	64
72	2	24	30	44	53	59
78	2		28	41	49	54
84	2		26	38	45	51
90	2		24	35	43	45
96	2		22	33	40	44
102	2			31	38	42
108	2			30	35	39
114	2			28	34	37
120	2			27	32	35

CORRUGATED ALUMINUM PIPE (ROUND)

PIPE DIAMETER (INCHES)	① MINUMUM COVER TOP OF PIPE TO TOP OF GROUND "H" (FEET)	MAX. FILL HEIGHT "H" ABOVE TOP OF PIPE (FEET)				
		METAL THICKNESS IN INCHES				
		0.060	0.075	0.105	0.135	0.164
		2 ⅔ INCH BY ½ INCH CORRUGATION RIVETED OR HELICAL LOCK-SEAM				
12	1	45	45			
18	2	30	30	52		
24	2	22	22	39	41	
30	2		18	31	32	34
36	2.5		15	26	27	28
42	2			43	43	44
48	2			40	41	43
54	2			35	37	38
60	2				33	34
66	2					31
72	2					29

CORRUGATED METAL PIPE ARCHES

EQUIV. DIA. (INCHES)	PIPE DIMENSION SPAN X RISE (INCHES)	MINUMUM CORNER RADIUS (INCHES)	STEEL				ALUMINUM		
			MIN. THICKNESS REQUIRED INCHES	① MIN. HEIGHT OF FILL, "H" (FT.) INSTALLATION TYPE 1		MAX. HEIGHT OF FILL, "H" (FT.) INSTALLATION TYPE 1	MIN. THICKNESS REQUIRED INCHES	① MIN. HEIGHT OF FILL, "H" (FT.) INSTALLATION TYPE 1	MAX. HEIGHT OF FILL, "H" (FT.) INSTALLATION TYPE 1
			2 ⅔ INCH BY ½ INCH CORRUGATION RIVETED, WELDED, OR HELICAL LOCK-SEAM				2 ⅔ INCH BY ½ INCH CORRUGATION RIVETED OR HELICAL LOCK-SEAM		
15	17x13	3	0.064	2		15	0.060	2	15
18	21x15	3	0.064	2		15	0.060	2	15
21	24x18	3	0.064	2.25		15	0.060	2.25	15
24	28x20	3	0.064	2.5		15	0.075	2.5	15
30	35x24	3	0.079	3		12	0.075	3	12
36	42x29	3½	0.079	3		12	0.105	3	12
42	49x33	4	0.079	3		12	0.105	3	12
48	57x38	5	0.109	3		13	0.135	3	13
54	64x43	6	0.109	3		14	0.135	3	14
60	71x47	7	0.138	3		15	0.164	3	15
66	77x52	8	0.168	3		15			
72	83x57	9	0.168	3		15			
			② 3 INCH BY 1 INCH OR 5 INCH BY 1 INCH CORRUGATION RIVETED, WELDED, OR HELICAL LOCK-SEAM						
				INSTALLATION TYPE 2	INSTALLATION TYPE 1	INSTALLATION TYPE 2 / INSTALLATION TYPE 1			
36	40x31	5	0.079	3	2	12 / 15			
42	46x36	6	0.079	3	2	13 / 15			
48	53x41	7	0.079	3	2	13 / 15			
54	60x46	8	0.079	3	2	13 / 15			
60	66x51	9	0.079	3	2	13 / 15			
66	73x55	12	0.079	3	2	15 / 15			
72	81x59	14	0.079	3	2	15 / 15			
78	87x63	14	0.079	3	2	15 / 15			
84	95x67	16	0.109	3	2	15 / 15			
90	103x71	16	0.109	3	2	15 / 15			
96	112x75	18	0.109	3	2	15 / 15			
102	117x79	18	0.109	3	2	15 / 15			
108	128x83	18	0.138	3	2	15 / 15			

CONSTRUCTION SEQUENCE

1. PLACE STRUCTURAL BEDDING MATERIAL TO GRADE. DO NOT COMPACT.
2. INSTALL PIPE TO GRADE.
3. COMPACT STRUCTURAL BEDDING OUTSIDE THE MIDDLE THIRD OF THE PIPE.
4. COMPLETE STRUCTURAL BACKFILL OPERATION BY WORKING FROM SIDE TO SIDE OF THE PIPE. THE SIDE TO SIDE STRUCTURAL BACKFILL DIFFERENTIAL SHALL NOT EXCEED 24 INCHES OR 1/3 THE SIZE OF THE PIPE, WHICHEVER IS LESS.

NOTE: STRUCTURAL BACKFILL AND STRUCTURAL BEDDING MATERIAL WILL NOT BE PAID FOR SEPARATELY, BUT COMPENSATION WILL BE CONSIDERED TO BE INCLUDED IN THE PRICE BID PER LINEAR FOOT OF METAL PIPE.

INSTALLATION TYPE	MATERIAL REQUIREMENTS FOR STRUCTURAL BACKFILL AND STRUCTURAL BEDDING
TYPE 1	AGGREGATE BASE COURSE (CLASS 4, 5, 6, OR 7)
TYPE 2	SELECTED MATERIALS (CLASS SM-1, SM-2, OR SM-4) OR TYPE 1 INSTALLATION MATERIAL ③

③ SM-3 WILL NOT BE ALLOWED.

EQUIVALENT METAL THICKNESSES AND GAUGES

METAL THICKNESS IN INCHES			GAUGE NUMBER
STEEL			
ZINC COATED	UNCOATED	ALUMINUM	
0.064	0.0598	0.060	16
0.079	0.0747	0.075	14
0.109	0.1046	0.105	12
0.138	0.1345	0.135	10
0.168	0.1644	0.164	8

- LEGEND -

D_o = OUTSIDE DIAMETER OF PIPE
MAX. = MAXIMUM
MIN. = MINIMUM
= STRUCTURAL BACKFILL MATERIAL
= UNDISTURBED SOIL
EQUIV. DIA. = EQUIVALENT DIAMETER
H = FILL COVER HEIGHT OVER PIPE (FEET)

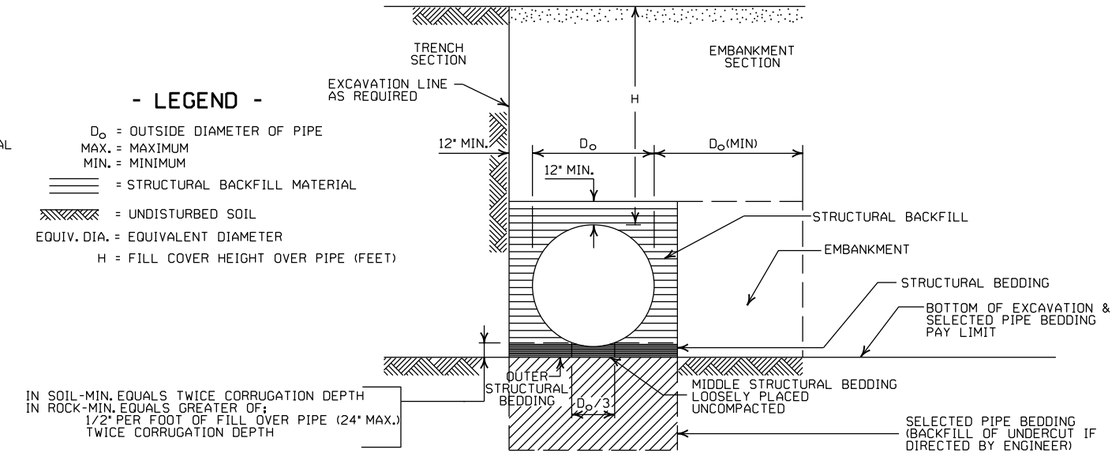

EMBANKMENT AND TRENCH INSTALLATIONS

1. STRUCTURAL BACKFILL, EMBANKMENT, AND OUTER STRUCTURAL BEDDING MATERIAL SHALL BE COMPACTED TO 95% OF THE MAXIMUM DENSITY ACCORDING TO THE TYPE OR CLASS OF MATERIAL USED.
2. INSTALLATION TYPE 1 OR 2 MAY BE USED FOR CORRUGATED STEEL OR ALUMINUM PIPE (ROUND).
3. INSTALALTION TYPE 1 SHALL BE USED FOR CORRUGATED STEEL OR ALUMINUM PIPE ARCHES WITH 2⅔" X ½" CORRUGATION.
4. INSTALLATION TYPE 1 OR 2 MAY BE USED FOR CORRUGATED STEEL OR ALUMINUM PIPE ARCHES WITH 3" X 1" OR 5" X 1" CORRUGATION.

GENERAL NOTES

1. METAL PIPE CULVERT CONSTRUCTION SHALL CONFORM TO ARKANSAS DEPARTMENT OF TRANSPORTATION STANDARD SPECIFICATIONS FOR HIGHWAY CONSTRUCTION (CURRENT EDITION), WITH APPLICABLE SUPPLEMENTAL SPECIFICATIONS AND SPECIAL PROVISIONS. UNLESS OTHERWISE NOTED IN THE PLANS, SECTION AND SUBSECTION REFER TO THE STANDARD CONSTRUCTION SPECIFICATIONS.
2. METAL PIPE CULVERT DESIGN SHALL CONFORM TO AASHTO LRFD BRIDGE DESIGN SPECIFICATIONS, FIFTH EDITION (2010) WITH 2010 INTERIMS.
3. METAL PIPE CULVERT MATERIALS AND INSTALLATIONS SHALL CONFORM TO SECTION 606 AND JOB SPECIAL PROVISION "METAL PIPE".
4. ALL PIPE SHALL BE PROTECTED DURING CONSTRUCTION BY A COVER SUFFICIENT TO PREVENT DAMAGE FROM PASSAGE OF EQUIPMENT.
5. THE MINIMUM TRENCH WIDTH SHALL BE THE OUTSIDE DIAMETER OF THE PIPE PLUS 24 INCHES. THE MAXIMUM ALLOWABLE TRENCH WIDTH SHALL BE THE MINIMUM WIDTH PRACTICABLE FOR WORKING CONDITIONS.
6. MULTIPLE PIPE CULVERTS SHALL BE INSTALLED WITH A MINIMUM CLEARANCE OF 24 INCHES BETWEEN STRINGS OF PIPE. REFER TO STD. DWG. FES-2 FOR MINIMUM CLEARANCE WHERE FLARED END SECTIONS ARE USED.
7. IMPERVIOUS MATERIAL SHOULD BE PLACED AS DIRECTED BY THE ENGINEER AT THE ENDS OF THE CULVERT TO PREVENT LOSS OF STRUCTURAL BEDDING WHEN PERVIOUS MATERIAL IS USED FOR STRUCTURAL BEDDING AND/OR BACKFILL.
8. WHEN DIRECTED BY THE ENGINEER, UNSUITABLE MATERIAL THAT IS ENCOUNTERED AT THE BOTTOM OF THE EXCAVATED TRENCH (BELOW THE AREA IDENTIFIED AS "STRUCTURAL BEDDING" ABOVE) WILL BE EXCAVATED AND REPLACED WITH SELECTED PIPE BEDDING. THE QUANTITY OF MATERIAL REQUIRED TO BACKFILL THE UNDERCUT AREA UP TO THE SELECTED PIPE BEDDING PAY LIMIT DESIGNATED ABOVE WILL BE MEASURED AND PAID FOR AS "SELECTED PIPE BEDDING."
9. WHEN THE EXISTING MATERIAL EXCAVATED FOR THE PIPE TRENCH IS DETERMINED BY THE ENGINEER TO BE UNSUITABLE FOR BACKFILLING THE PIPE (ABOVE THE AREA IDENTIFIED AS STRUCTURAL BACKFILL), BORROW MATERIAL OR MATERIAL FROM THE ROADWAY EXCAVATION WILL BE USED TO BACKFILL THE PIPE. IF SUITABLE MATERIAL IS NOT AVAILABLE, THE ENGINEER MAY AUTHORIZE THE USE OF "SELECTED PIPE BACKFILL."

① FOR MINIMUM COVER VALUES, "H" SHALL INCLUDE A MINIMUM 12" OF PAVEMENT AND/OR BASE.

② WHERE THE STANDARD 2 2/3" x ½" CORRUGATION AND GAUGE IS SPECIFIED FOR A GIVEN DIAMETER, A PIPE OF THE SAME DIAMETER WITH A 3" x 1" OR 5" x 1" CORRUGATION MAY BE SUBSTITUTED, PROVIDING IT IS GAUGED FOR A FILL HEIGHT CONDITION EQUAL TO OR GREATER THAN THE MAXIMUM FILL HEIGHT CONDITION FOR THE SPECIFIED GAUGE AND CORRUGATION.

DATE	REVISION	DATE FILMED
2-27-14	REVISED GENERAL NOTE 1.	
12-15-11	REVISED FOR LRFD DESIGN SPECS	
3-30-00	REVISED INSTALLATIONS	
11-06-97	ISSUED	

ARKANSAS STATE HIGHWAY COMMISSION

METAL PIPE CULVERT FILL HEIGHTS & BEDDING

STANDARD DRAWING PCM-1

INSTALLATION TYPE	•• MATERIAL REQUIREMENTS FOR STRUCTURAL BACKFILL AND STRUCTURAL BEDDING
TYPE 2	•SELECTED MATERIALS (CLASS SM-1, SM-2 OR SM-4)

• AGGREGATE BASE COURSE (CLASS 4, 5, 6, OR 7) MAY BE USED IN LIEU OF SELECTED MATERIAL.

SM3 WILL NOT BE ALLOWED.

•• STRUCTURAL BEDDING MATERIAL SHALL HAVE A MAXIMUM PARTICLE SIZE OF 1 INCH. STRUCTURAL BACKFILL MATERIAL SHALL BE FREE OF ORGANIC MATERIAL, STONES LARGER THAN 1.50 INCH IN GREATEST DIMENSION, OR FROZEN LUMPS.

STRUCTURAL BACKFILL AND STRUCTURAL BEDDING MATERIAL WILL NOT BE PAID FOR SEPARATELY, BUT COMPENSATION WILL BE CONSIDERED TO BE INCLUDED IN THE PRICE BID PER LINEAR FOOT OF HDPE PIPE.

MULTIPLE INSTALLATION OF HIGH DENSITY POLYETHYLENE PIPES

PIPE DIAMETER	CLEAR DISTANCE BETWEEN PIPES
18"	1'-6"
24"	2'-0"
30"	2'-6"
36"	3'-0"
42"	3'-6"
48"	4'-0"

MINIMUM TRENCH WIDTH BASED ON FILL HEIGHT "H"

PIPE DIAMETER	TRENCH WIDTH (FEET)	
	"H" < 10'-0"	"H" >OR= 10'-0"
18"	4'-6"	4'-6"
24"	5'-0"	6'-0"
30"	5'-6"	7'-6"
36"	6'-0"	9'-0"
42"	7'-0"	10'-6"
48"	8'-0"	12'-0"

①NOTE:
18" MIN. (18" - 30" DIAMETERS)
24" MIN. (36" - 48" DIAMETERS)

MINIMUM COVER VALUES, "H" SHALL INCLUDE A MINIMUM 12" OF PAVEMENT AND/OR BASE.

MINIMUM COVER FOR CONSTRUCTION LOADS

PIPE DIAMETER	② MIN. COVER (FEET) FOR INDICATED CONSTRUCTION LOADS			
	18.0-50.0 (KIPS)	50.0-75.0 (KIPS)	75.0-110.0 (KIPS)	110.0-175.0 (KIPS)
36" OR LESS	2'-0"	2'-6"	3'-0"	3'-0"
42" OR GREATER	3'-0"	3'-0"	3'-6"	4'-0"

②MINIMUM COVER SHALL BE MEASURED FROM TOP OF PIPE TO TOP OF THE MAINTAINED CONSTRUCTION ROADWAY SURFACE. THE SURFACE SHALL BE MAINTAINED.

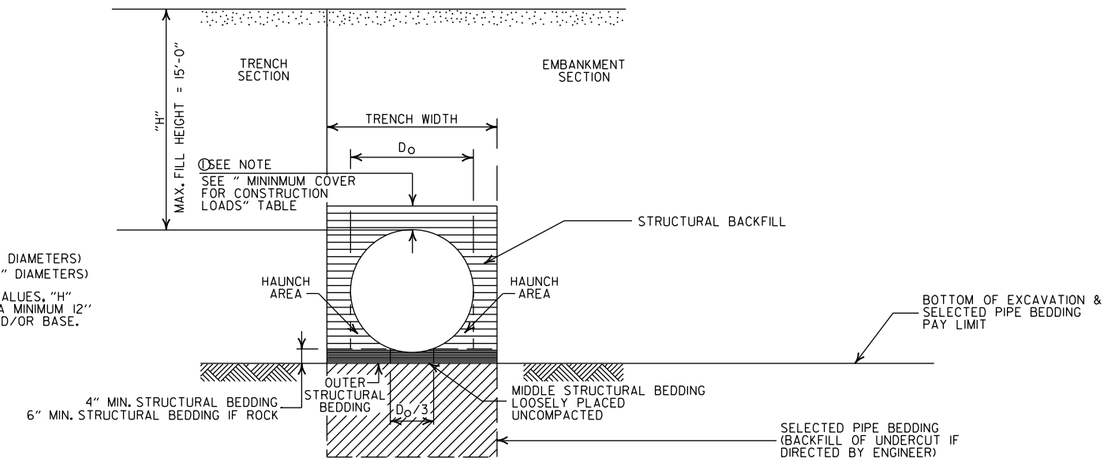

TYPE 2 EMBANKMENT AND TRENCH INSTALLATIONS

1. STRUCTURAL BACKFILL, EMBANKMENT, AND OUTER STRUCTURAL BEDDING MATERIAL SHALL BE COMPACTED TO 95% OF THE MAXIMUM DENSITY ACCORDING TO THE TYPE OR CLASS OF MATERIAL USED.

CONSTRUCTION SEQUENCE

1. PLACE STRUCTURAL BEDDING MATERIAL TO GRADE. DO NOT COMPACT.
2. INSTALL PIPE TO GRADE.
3. COMPACT STRUCTURAL BEDDING OUTSIDE THE MIDDLE THIRD OF THE PIPE.
4. THE STRUCTURAL BACKFILL SHALL BE PLACED AND COMPACTED IN LAYERS NOT EXCEEDING 8". THE LAYERS SHALL BE BROUGHT UP EVENLY AND SIMULTANEOUSLY TO THE ELEVATION OF THE MINIMUM COVER.
5. PIPE INSTALLATION MAY REQUIRE THE USE OF RESTRAINTS, WEIGHTING OR OTHER APPROVED METHODS IN ORDER TO HELP MAINTAIN GRADE AND ALIGNMENT.

GENERAL NOTES

1. PIPE SHALL CONFORM TO AASHTO M294, TYPE S. INSTALLATION SHALL CONFORM TO JOB SPECIAL PROVISION "PLASTIC PIPE" AND SECTION 606 OF THE STANDARD SPECIFICIATIONS FOR HIGHWAY CONSTRUCTION (CURRENT EDITION).
2. PLASTIC PIPE CULVERT DESIGN SHALL CONFORM TO AASHTO LRFD BRIDGE DESIGN SPECIFICATIONS, FIFTH EDITION (2010) WITH 2010 INTERIMS.
3. THE MAXIMUM ALLOWABLE TRENCH WIDTH SHALL BE THE MINIMUM WIDTH PLUS A SUFFICIENT WIDTH TO ENSURE WORKING ROOM TO PROPERLY AND SAFELY PLACE AND COMPACT HAUNCHING AND OTHER BACKFILL MATERIAL.
4. IMPERVIOUS MATERIAL SHOULD BE PLACED AS DIRECTED BY THE ENGINEER AT THE ENDS OF THE CULVERT TO PREVENT LOSS OF STRUCTURAL BEDDING WHEN PERVIOUS MATERIAL IS USED FOR STRUCTURAL BEDDING AND/OR BACKFILL.
5. WHEN DIRECTED BY THE ENGINEER, UNSUITABLE MATERIAL THAT IS ENCOUNTERED AT THE BOTTOM OF THE EXCAVATED TRENCH (BELOW THE AREA IDENTIFIED AS "STRUCTURAL BEDDING" ABOVE) WILL BE EXCAVATED AND REPLACED WITH SELECTED PIPE BEDDING. THE QUANTITY OF MATERIAL REQUIRED TO BACKFILL THE UNDERCUT AREA UP TO THE SELECTED PIPE BEDDING PAY LIMIT DESIGNATED ABOVE WILL BE MEASURED AND PAID FOR AS "SELECTED PIPE BEDDING."
6. WHEN THE EXISTING MATERIAL EXCAVATED FOR THE PIPE TRENCH IS DETERMINED BY THE ENGINEER TO BE UNSUITABLE FOR BACKFILLING THE PIPE (ABOVE THE AREA IDENTIFIED ABOVE AS STRUCTURAL BACKFILL), BORROW MATERIAL OR MATERIAL FROM THE ROADWAY EXCAVATION WILL BE USED TO BACKFILL THE PIPE. IF SUITABLE MATERIAL IS NOT AVAILABLE, THE ENGINEER MAY AUTHORIZE THE USE OF "SELECTED PIPE BACKFILL."
7. FOR PIPE TYPES THAT ARE NOT SMOOTH ON THE OUTSIDE (CORRUGATED OR PROFILE WALLS), BACKFILL GRADATIONS SHOULD BE SELECTED THAT WILL PERMIT THE FILLING OF THE CORRUGATION OR PROFILE VALLEY.
8. HIGH DENSITY POLYETHYLENE PIPES OF DIAMETERS OTHER THAN SHOWN WILL NOT BE ALLOWED.
9. JOINTS FOR HDPE PIPE SHALL MEET THE REQUIREMENTS FOR SOIL TIGHTNESS AS SPECIFIED IN AASHTO SECTION 26.4.2.4 AND 30.4.2 "AASHTO LRFD BRIDGE CONSTRUCTION SPECIFICATIONS." JOINTS SHALL BE INSTALLED PER MANUFACTURER'S RECOMMENDATIONS.

- LEGEND -

H = FILL HEIGHT (FT.)
Ø = OUTSIDE DIAMETER OF PIPE
MAX. = MAXIMUM
MIN. = MINIMUM

= STRUCTURAL BACKFILL MATERIAL

= UNDISTURBED SOIL

DATE	REVISION	DATE FILMED
2-27-14	REVISED GENERAL NOTE 1.	
12-15-11	REVISED GENERAL NOTES & MINIMUM COVER NOTE	
11-17-10	ISSUED	

ARKANSAS STATE HIGHWAY COMMISSION

PLASTIC PIPE CULVERT (HIGH DENSITY POLYETHYLENE)

STANDARD DRAWING PCP-1

INSTALLATION TYPE	•• MATERIAL REQUIREMENTS FOR STRUCTURAL BACKFILL AND STRUCTURAL BEDDING
TYPE 2	•SELECTED MATERIALS (CLASS SM-1, SM-2, OR SM-4)

• AGGREGATE BASE COURSE (CLASS 4, 5, 6, OR 7) MAY BE USED IN LIEU OF SELECTED MATERIAL.

SM3 WILL NOT BE ALLOWED.

•• STRUCTURAL BEDDING MATERIAL SHALL HAVE A MAXIMUM PARTICLE SIZE OF 1INCH. STRUCTURAL BACKFILL MATERIAL SHALL BE FREE OF ORGANIC MATERIAL, STONES LARGER THAN 1.50 INCH IN GREATEST DIMENSION, OR FROZEN LUMPS.

STRUCTURAL BACKFILL AND STRUCTURAL BEDDING MATERIAL WILL NOT BE PAID FOR SEPARATELY, BUT COMPENSATION WILL BE CONSIDERED TO BE INCLUDED IN THE PRICE BID PER LINEAR FOOT OF PVC PIPE.

MINIMUM TRENCH WIDTH BASED ON FILL HEIGHT "H"

PIPE DIAMETER	TRENCH WIDTH (FEET) "H" < 10'-0"	TRENCH WIDTH (FEET) "H" >OR= 10'-0"
18"	4'-6"	4'-6"
24"	5'-0"	6'-0"
30"	5'-6"	7'-6"
36"	6'-0"	9'-0"

MULTIPLE INSTALLATION OF PVC PIPES

PIPE DIAMETER	CLEAR DISTANCE BETWEEN PIPES
18"	1'-6"
24"	2'-0"
30"	2'-6"
36"	3'-0"

MAXIMUM FILL HEIGHT BASED ON STRUCTURAL BACKFILL

PIPE DIAMETER	"H"
18"	45'-0"
24"	45'-0"
30"	40'-0"
36"	40'-0"

① NOTE:
12" MIN. (18" - 36" DIAMETERS)
MINIMUM COVER VALUE, "H" SHALL INCLUDE A MINIMUM 12" OF PAVEMENT AND/OR BASE.

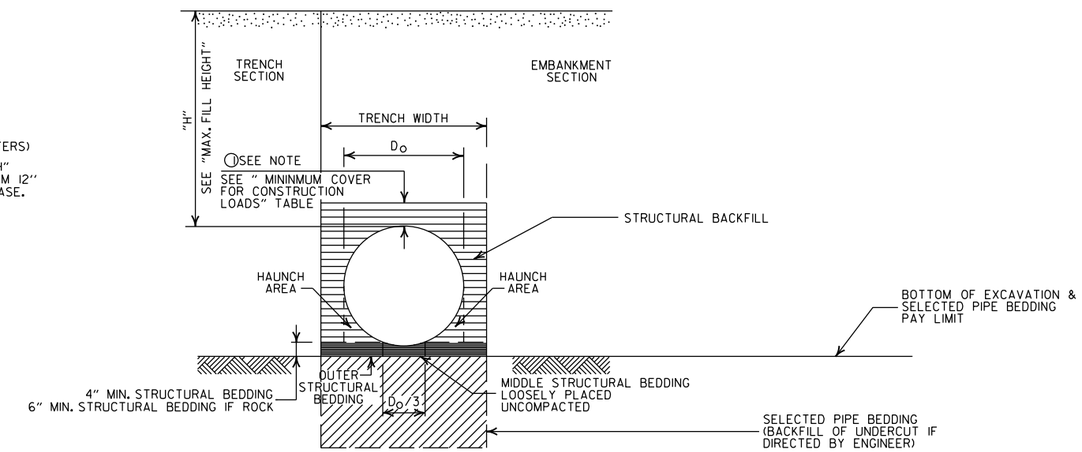

TYPE 2 EMBANKMENT AND TRENCH INSTALLATIONS

1. STRUCTURAL BACKFILL, EMBANKMENT, AND OUTER STRUCTURAL BEDDING MATERIAL SHALL BE COMPACTED TO 95% OF THE MAXIMUM DENSITY ACCORDING TO THE TYPE OR CLASS OF MATERIAL USED.

MINIMUM COVER FOR CONSTRUCTION LOADS

PIPE DIAMETER	② MIN. COVER (FEET) FOR INDICATED CONSTRUCTION LOADS 18.0-50.0 (KIPS)	50.0-75.0 (KIPS)	75.0-110.0 (KIPS)	110.0-175.0 (KIPS)
18" THRU 36"	2'-0"	2'-6"	3'-0"	3'-0"

②MINIMUM COVER SHALL BE MEASURED FROM TOP OF PIPE TO TOP OF THE MAINTAINED CONSTRUCTION ROADWAY SURFACE. THE SURFACE SHALL BE MAINTAINED.

CONSTRUCTION SEQUENCE

1. PLACE STRUCTURAL BEDDING MATERIAL TO GRADE. DO NOT COMPACT.
2. INSTALL PIPE TO GRADE.
3. COMPACT STRUCTURAL BEDDING OUTSIDE THE MIDDLE THIRD OF THE PIPE.
4. THE STRUCTURAL BACKFILL SHALL BE PLACED AND COMPACTED IN LAYERS NOT EXCEEDING 8". THE LAYERS SHALL BE BROUGHT UP EVENLY AND SIMULTANEOUSLY TO THE ELEVATION OF THE MINIMUM COVER.
5. PIPE INSTALLATION MAY REQUIRE THE USE OF RESTRAINTS, WEIGHTING OR OTHER APPROVED METHODS IN ORDER TO HELP MAINTAIN GRADE AND ALIGNMENT.

GENERAL NOTES

1. PIPE SHALL CONFORM TO ASTM F949, CELL CLASS 12454. INSTALLATION SHALL CONFORM TO JOB SPECIAL PROVISION "PLASTIC PIPE" AND SECTION 606 OF THE STANDARD SPECIFICATIONS FOR HIGHWAY CONSTRUCTION (CURRENT EDITION).
2. PLASTIC PIPE CULVERT DESIGN SHALL CONFORM TO AASHTO LRFD BRIDGE DESIGN SPECIFICATIONS, FIFTH EDITION (2010) WITH 2010 INTERIMS.
3. THE MAXIMUM ALLOWABLE TRENCH WIDTH SHALL BE THE MINIMUM WIDTH PLUS A SUFFICIENT WIDTH TO ENSURE WORKING ROOM TO PROPERLY AND SAFELY PLACE AND COMPACT HAUNCHING AND OTHER BACKFILL MATERIAL.
4. IMPERVIOUS MATERIAL SHOULD BE PLACED AS DIRECTED BY THE ENGINEER AT THE ENDS OF THE CULVERT TO PREVENT LOSS OF STRUCTURAL BEDDING WHEN PERVIOUS MATERIAL IS USED FOR STRUCTURAL BEDDING AND/OR BACKFILL.
5. WHEN DIRECTED BY THE ENGINEER, UNSUITABLE MATERIAL THAT IS ENCOUNTERED AT THE BOTTOM OF THE EXCAVATED TRENCH (BELOW THE AREA IDENTIFIED AS "STRUCTURAL BEDDING" ABOVE) WILL BE EXCAVATED AND REPLACED WITH SELECTED PIPE BEDDING. THE QUANTITY OF MATERIAL REQUIRED TO BACKFILL THE UNDERCUT AREA UP TO THE SELECTED PIPE BEDDING PAY LIMIT DESIGNATED ABOVE WILL BE MEASURED AND PAID FOR AS "SELECTED PIPE BEDDING."
6. WHEN THE EXISTING MATERIAL EXCAVATED FOR THE PIPE TRENCH IS DETERMINED BY THE ENGINEER TO BE UNSUITABLE FOR BACKFILLING THE PIPE (ABOVE THE AREA IDENTIFIED ABOVE AS STRUCTURAL BACKFILL), BORROW MATERIAL OR MATERIAL FROM THE ROADWAY EXCAVATION WILL BE USED TO BACKFILL THE PIPE. IF SUITABLE MATERIAL IS NOT AVAILABLE, THE ENGINEER MAY AUTHORIZE THE USE OF "SELECTED PIPE BACKFILL."
7. FOR PIPE TYPES THAT ARE NOT SMOOTH ON THE OUTSIDE (CORRUGATED OR PROFILE WALLS), BACKFILL GRADATIONS SHOULD BE SELECTED THAT WILL PERMIT THE FILLING OF THE CORRUGATION OR PROFILE VALLEY.
8. PVC PIPES OF DIAMETERS OTHER THAN SHOWN WILL NOT BE ALLOWED.
9. JOINTS FOR PVC PIPE SHALL MEET THE REQUIREMENTS FOR SOIL TIGHTNESS AS SPECIFIED IN AASHTO SECTION 26.4.2.4 AND 30.4.2 "AASHTO LRFD BRIDGE CONSTRUCTION SPECIFICATIONS." JOINTS SHALL BE INSTALLED PER MANUFACTURER'S RECOMMENDATIONS.

- LEGEND -

H = FILL HEIGHT (FT.)
D_O = OUTSIDE DIAMETER OF PIPE
MAX. = MAXIMUM
MIN. = MINIMUM

= STRUCTURAL BACKFILL MATERIAL
= UNDISTURBED SOIL

DATE	REVISION	DATE FILMED
2-27-14	REVISED GENERAL NOTE 1.	
12-15-11	REV GENERAL NOTES & MINIMUM COVER NOTE; DELETED SM3 MATERIAL	
11-17-10	ISSUED	

ARKANSAS STATE HIGHWAY COMMISSION

PLASTIC PIPE CULVERT (PVC F949)

STANDARD DRAWING PCP-2

INSTALLATION TYPE	**MATERIAL REQUIREMENTS FOR STRUCTURAL BACKFILL AND STRUCTURAL BEDDING
TYPE 1	AGGREGATE BASE COURSE (CLASS 4, 5, 6, OR 7)
TYPE 2	*SELECTED MATERIALS (CLASS SM-1, SM-2 OR SM-4) OR TYPE 1 INSTALLATION MATERIAL

*SM3 WILL NOT BE ALLOWED.

** STRUCTURAL BEDDING MATERIAL SHALL HAVE A MAXIMUM PARTICLE SIZE OF 1INCH. STRUCTURAL BACKFILL MATERIAL SHALL BE FREE OF ORGANIC MATERIAL, STONES LARGER THAN 1.50 INCH IN GREATEST DIMENSION, OR FROZEN LUMPS.

STRUCTURAL BACKFILL AND STRUCTURAL BEDDING MATERIAL WILL NOT BE PAID FOR SEPARATELY, BUT COMPENSATION WILL BE CONSIDERED TO BE INCLUDED IN THE PRICE BID PER LINEAR FOOT OF POLYPROPYLENE PIPE.

MINIMUM TRENCH WIDTH BASED ON FILL HEIGHT "H"

PIPE DIAMETER	TRENCH WIDTH (FEET) "H" < 10'-0"	"H" >OR= 10'-0"
18"	4'-6"	4'-6"
24"	5'-0"	6'-0"
30"	5'-6"	7'-6"
36"	6'-0"	9'-0"
42"	7'-0"	10'-6"
48"	8'-0"	12'-0"
60"	10'-0"	15'-0"

MAXIMUM HEIGHT OF FILL "H"

PIPE DIAMETER	INSTALLATION TYPE TYPE 1	TYPE 2
18"	18'	14'
24"	16'	12'
30"	18'	14'
36"	16'	12'
42"	18'	13'
48"	15'	11'
60"	17'	12'

(1) NOTE:
12" MIN. (18" - 42" DIAMETERS)
24" MIN. (60" DIAMETER)

MINIMUM COVER VALUES, "H" SHALL INCLUDE A MINIMUM 12" OF PAVEMENT AND/OR BASE.

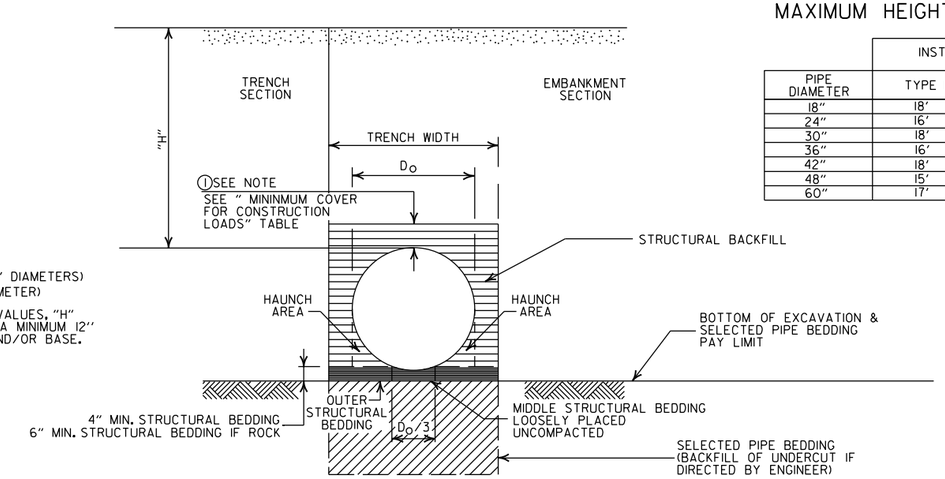

EMBANKMENT AND TRENCH INSTALLATIONS

1. STRUCTURAL BACKFILL, EMBANKMENT, AND OUTER STRUCTURAL BEDDING MATERIAL SHALL BE COMPACTED TO 95% OF THE MAXIMUM DENSITY ACCORDING TO THE TYPE OR CLASS OF MATERIAL USED.

MULTIPLE INSTALLATION OF POLYPROPYLENE PIPES

PIPE DIAMETER	CLEAR DISTANCE BETWEEN PIPES
18"	1'-6"
24"	2'-0"
30"	2'-6"
36"	3'-0"
42"	3'-6"
48"	4'-0"
60"	5'-0"

MINIMUM COVER FOR CONSTRUCTION LOADS

PIPE DIAMETER	(2) MIN. COVER (FEET) FOR INDICATED CONSTRUCTION LOADS 18.0-50.0 (KIPS)	50.0-75.0 (KIPS)	75.0-110.0 (KIPS)	110.0-150.0 (KIPS)
36" OR LESS	2'-0"	2'-6"	3'-0"	3'-0"
42" OR GREATER	3'-0"	3'-0"	3'-6"	4'-0"

(2) MINIMUM COVER SHALL BE MEASURED FROM TOP OF PIPE TO TOP OF THE MAINTAINED CONSTRUCTION ROADWAY SURFACE. THE SURFACE SHALL BE MAINTAINED.

CONSTRUCTION SEQUENCE

1. PLACE STRUCTURAL BEDDING MATERIAL TO GRADE. DO NOT COMPACT.
2. INSTALL PIPE TO GRADE.
3. COMPACT STRUCTURAL BEDDING OUTSIDE THE MIDDLE THIRD OF THE PIPE.
4. THE STRUCTURAL BACKFILL SHALL BE PLACED AND COMPACTED IN LAYERS NOT EXCEEDING 8". THE LAYERS SHALL BE BROUGHT UP EVENLY AND SIMULTANEOUSLY TO THE ELEVATION OF THE MINIMUM COVER.
5. PIPE INSTALLATION MAY REQUIRE THE USE OF RESTRAINTS, WEIGHTING OR OTHER APPROVED METHODS IN ORDER TO HELP MAINTAIN GRADE AND ALIGNMENT.

GENERAL NOTES

1. PIPE SHALL CONFORM TO AASHTO M330, TYPE S. INSTALLATION SHALL CONFORM TO JOB SPECIAL PROVISION "PLASTIC PIPE" AND SECTION 606 OF THE STANDARD SPECIFICIATIONS FOR HIGHWAY CONSTRUCTION (CURRENT EDITION).
2. PLASTIC PIPE CULVERT DESIGN SHALL CONFORM TO AASHTO LRFD BRIDGE DESIGN SPECIFICATIONS, SIXTH EDITION (2012) WITH 2013 INTERIMS.
3. THE MAXIMUM ALLOWABLE TRENCH WIDTH SHALL BE THE MINIMUM WIDTH PLUS A SUFFICIENT WIDTH TO ENSURE WORKING ROOM TO PROPERLY AND SAFELY PLACE AND COMPACT HAUNCHING AND OTHER BACKFILL MATERIAL.
4. IMPERVIOUS MATERIAL SHOULD BE PLACED AS DIRECTED BY THE ENGINEER AT THE ENDS OF THE CULVERT TO PREVENT LOSS OF STRUCTURAL BEDDING WHEN PERVIOUS MATERIAL IS USED FOR STRUCTURAL BEDDING AND/OR BACKFILL.
5. WHEN DIRECTED BY THE ENGINEER, UNSUITABLE MATERIAL THAT IS ENCOUNTERED AT THE BOTTOM OF THE EXCAVATED TRENCH (BELOW THE AREA IDENTIFIED AS "STRUCTURAL BEDDING" ABOVE) WILL BE EXCAVATED AND REPLACED WITH SELECTED PIPE BEDDING. THE QUANTITY OF MATERIAL REQUIRED TO BACKFILL THE UNDERCUT AREA UP TO THE SELECTED PIPE BEDDING PAY LIMIT DESIGNATED ABOVE WILL BE MEASURED AND PAID FOR AS "SELECTED PIPE BEDDING."
6. WHEN THE EXISTING MATERIAL EXCAVATED FOR THE PIPE TRENCH IS DETERMINED BY THE ENGINEER TO BE UNSUITABLE FOR BACKFILLING THE PIPE (ABOVE THE AREA IDENTIFIED ABOVE AS STRUCTURAL BACKFILL), BORROW MATERIAL OR MATERIAL FROM THE ROADWAY EXCAVATION WILL BE USED TO BACKFILL THE PIPE. IF SUITABLE MATERIAL IS NOT AVAILABLE, THE ENGINEER MAY AUTHORIZE THE USE OF "SELECTED PIPE BACKFILL."
7. FOR PIPE TYPES THAT ARE NOT SMOOTH ON THE OUTSIDE (CORRUGATED OR PROFILE WALLS), BACKFILL GRADATIONS SHOULD BE SELECTED THAT WILL PERMIT THE FILLING OF THE CORRUGATION OR PROFILE VALLEY.
8. POLYPROPYLENE PIPES OF DIAMETERS OTHER THAN SHOWN WILL NOT BE ALLOWED.
9. JOINTS FOR POLYPROPYLENE PIPE SHALL MEET THE REQUIREMENTS FOR SOIL TIGHTNESS AS SPECIFIED IN SECTION 26.4.2.4 AND 30.4.2 OF THE AASHTO LRFD BRIDGE CONSTRUCTION SPECIFICATIONS 3RD EDITION (2010) WITH 2012 INTERIMS. JOINTS SHALL BE INSTALLED PER MANUFACTURER'S RECOMMENDATIONS.

- LEGEND -

H = FILL HEIGHT (FT.)
Do = OUTSIDE DIAMETER OF PIPE
MAX. = MAXIMUM
MIN. = MINIMUM

= STRUCTURAL BACKFILL MATERIAL
= UNDISTURBED SOIL

DATE	REVISION	DATE FILMED
02-27-20	REVISED	
11-07-19	ISSUED	

ARKANSAS STATE HIGHWAY COMMISSION

PLASTIC PIPE CULVERT (POLYPROPYLENE)

STANDARD DRAWING PCP-3

NOTES:

1. REFER TO THE STRIPING DETAILS FOR PAVEMENT MARKING LINE WIDTHS.
2. THIS DRAWING SHALL BE USED IN CONJUNCTION WITH THE LATEST REVISED ADDITION OF THE "MANUAL ON UNIFORM TRAFFIC CONTROL DEVICES."
3. RAISED PAVEMENT MARKERS SHALL BE PLACED ON AN 80 FEET SPACING UNLESS OTHERWISE SHOWN IN THE PLANS.

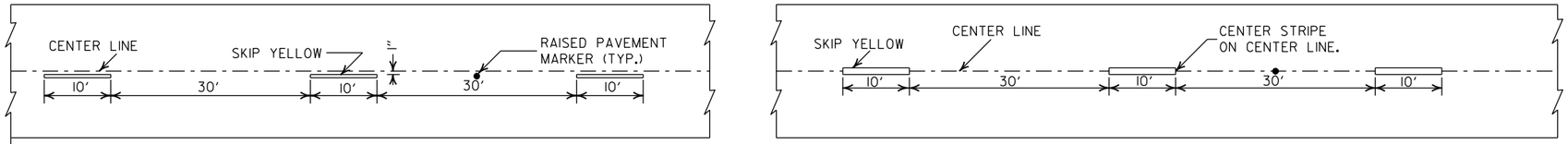

CONCRETE PAVEMENT

ASPHALT PAVEMENT

BROKEN LINE STRIPING

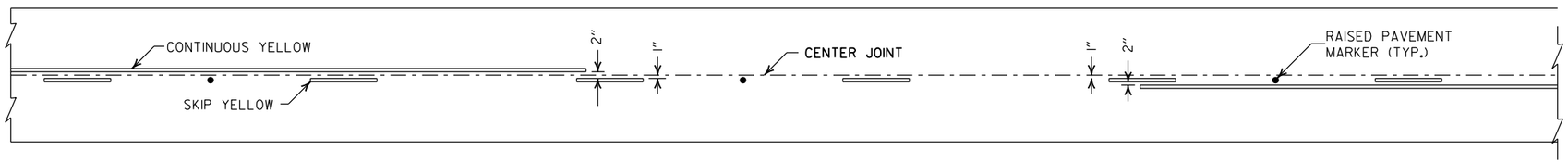

SOLID LINE STRIPING ON CONCRETE PAVEMENT

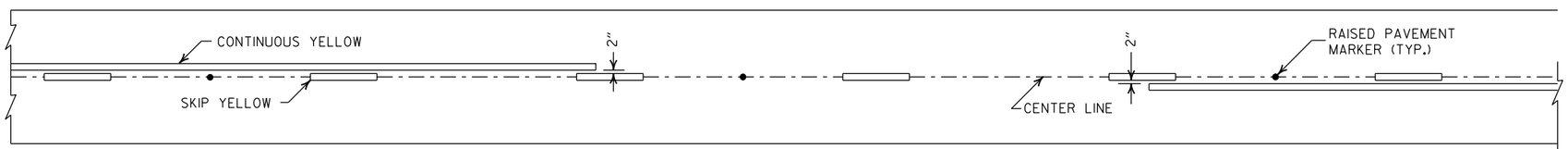

SOLID LINE STRIPING ON ASPHALT PAVEMENT

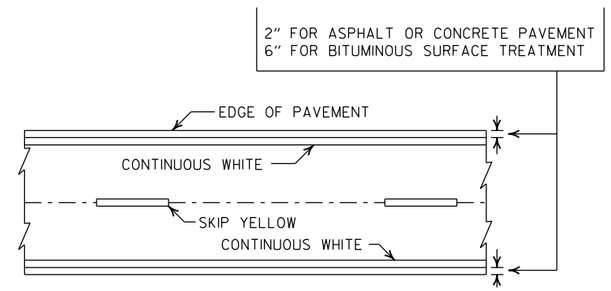

PAVEMENT EDGE LINE MARKING

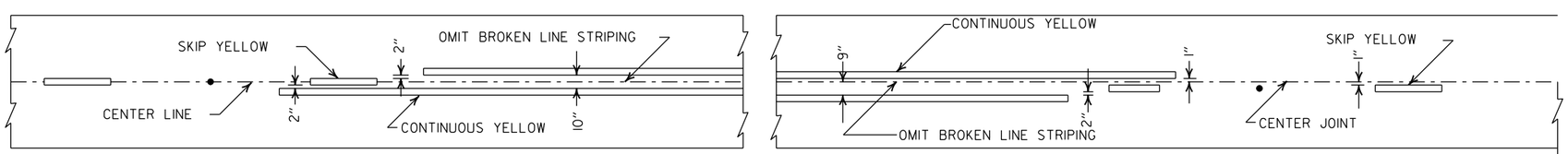

ASPHALT PAVEMENT

CONCRETE PAVEMENT

STRIPING AT ADJACENT NO PASSING LANES

NOTE:
THE RED LENS OF THE TYPE II R.P.M. SHALL FACE THE INCORRECT TRAFFIC MOVEMENT.

NOTE:
DIMENSIONS SHOWN FOR RAISED PAVEMENT MARKERS ARE TYPICAL. THE CONTRACTOR MAY SUBSTITUTE SIMILAR MARKERS WITH THE APPROVAL OF THE ENGINEER. REQUESTING APPROVAL FOR SIMILAR MARKERS MAY BE MADE BY REFERRING TO THE ARDOT QUALIFIED PRODUCTS LIST.

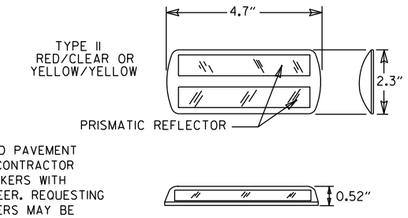

DETAIL OF STANDARD RAISED PAVEMENT MARKERS

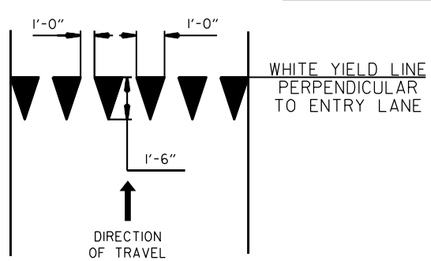

YIELD LINE DETAIL

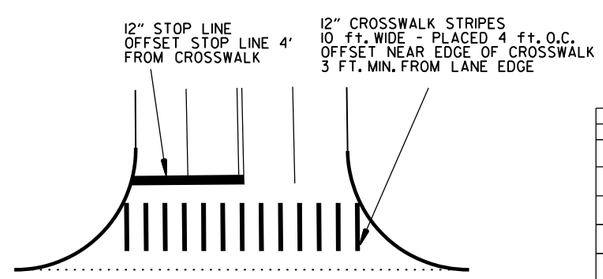

CROSSWALK AND STOP LINE DETAILS

DATE	REVISION	FILMED
2-27-20	REVISED STOP LINE DETAILS	
6-1-17	ADDED YIELD LINE DETAIL	
5-12-16	REVISED LINE WIDTHS, SPACING, & NOTES	
9-12-13	REVISED DETAIL OF STANDARD RAISED PAVEMENT MARKERS	
11-17-10	REVISED GENERAL NOTES & REMOVED PLOWABLE PVMT MRKRS	
11-18-04	REVISED NOTE 2 & GENERAL NOTES	
8-22-02	ADDED CROSSWALK & STOPBAR DTLS.	
7-02-98	ADDED DETAILS OF STD. RAISED PAV'T. MARKERS	
4-26-96	REV. NOTES 3&4; ADDED R.P.M.	
9-30-80	DRAWN	1-9-30-80

ARKANSAS STATE HIGHWAY COMMISSION

PAVEMENT MARKING DETAILS

STANDARD DRAWING PM-1

DRAWER PLAN VIEW

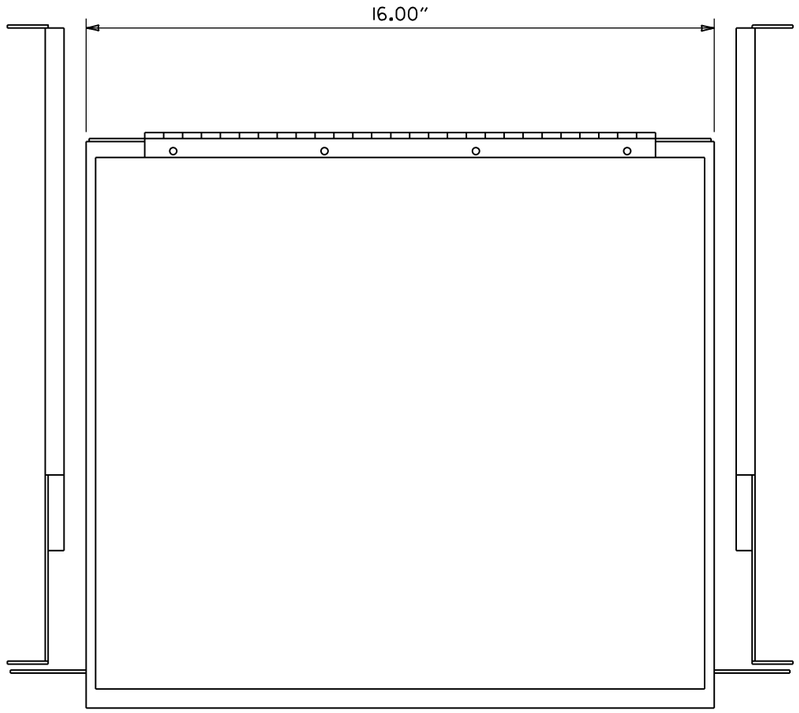

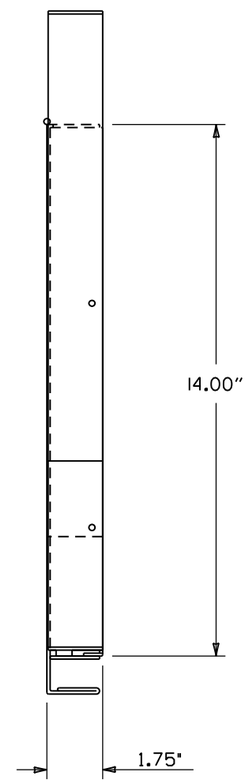

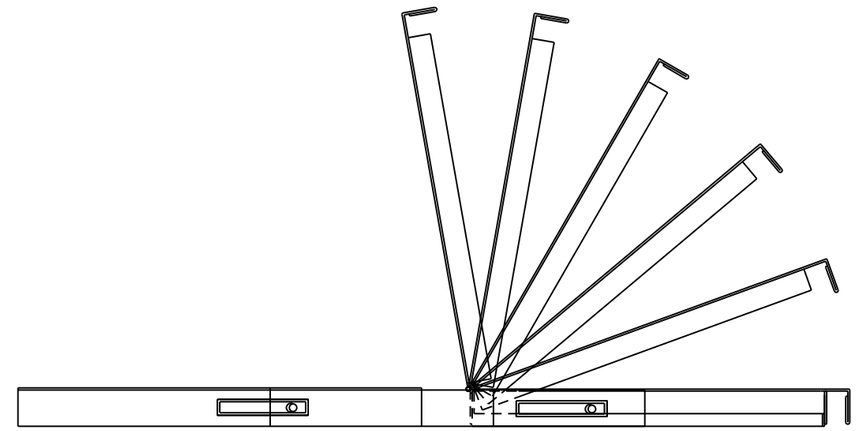

NOTES:
1. RIGHT HAND SLIDE SHOWN. LEFT SLIDE OPPOSITE.
2. GENERAL DEVICES (CC3002-99-0102) OR EQUAL AND CONTAINS (1) RIGHT HAND SLIDE ASSEMBLY, (1) LEFT HAND SLIDE ASSEMBLY.
3. ALL HARDWARE NECESSARY TO FASTEN SLIDE ASSEMBLY TO UNDERSIDE OF CONTROLLER SHELF SHALL BE INCLUDED.

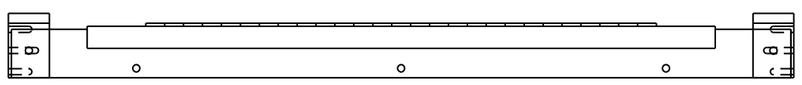

FRONT VIEW

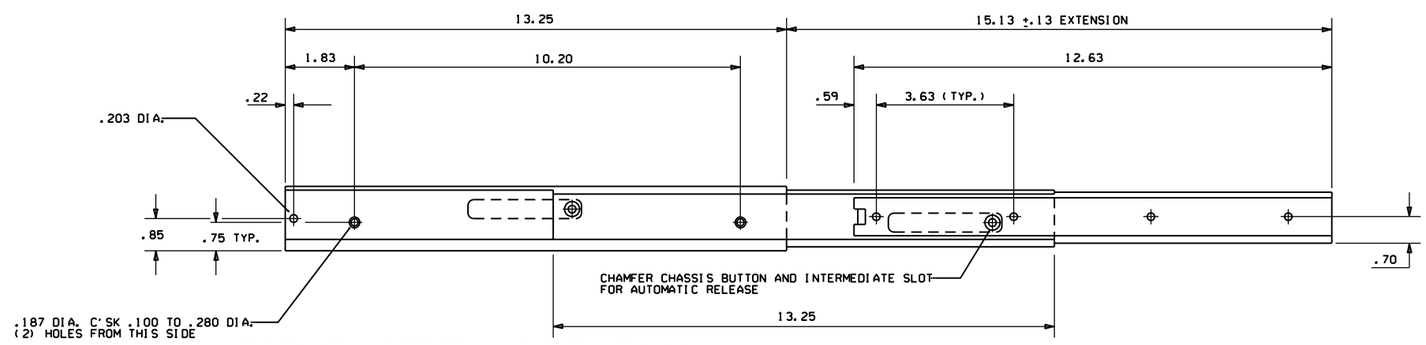

RIGHT SIDE ASSEMBLY

DATE	REVISION	DATE FILM
9-12-13	ISSUED AS STANDARD DRAWING	
6-15-05	ISSUED	

ARKANSAS STATE HIGHWAY COMMISSION

CONTROLLER CABINET UTILITY DRAWER

STANDARD DRAWING SD-5

CONDUIT ENTRY TO EXISTING POLE BASE

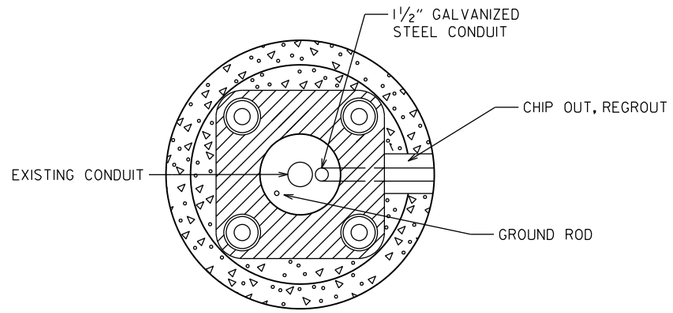

ANCHOR BASE

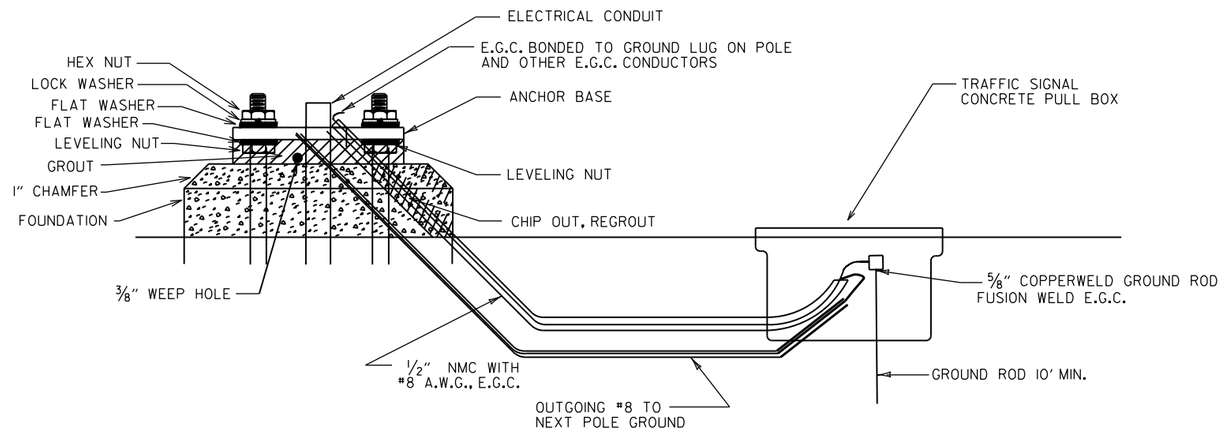

CONDUIT ENTRY TO EXISTING CONTROLLER CABINET

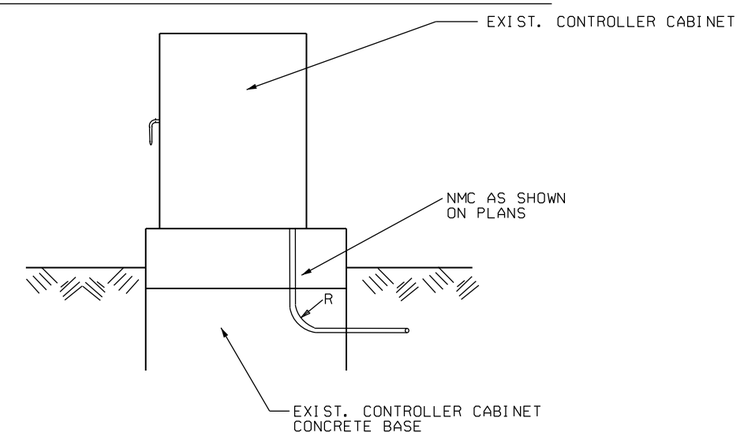

NOTE: ENTRY TO CABINET SHALL BE THROUGH A CUT IN THE BASE SUFFICIENT TO PROVIDE ADEQUATE CONDUIT RADIUS FOR ITEM.

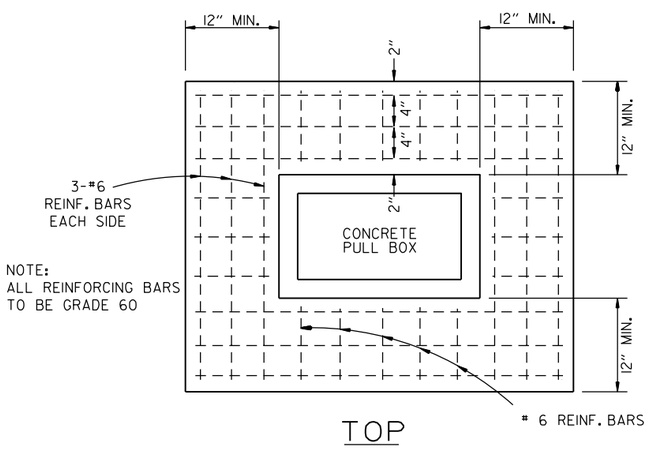

TOP

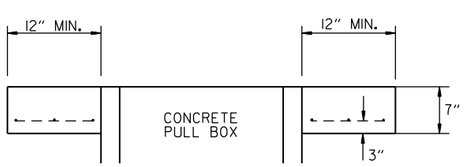

ELEVATION

TYPE "HD" CONCRETE PULL BOX DETAIL

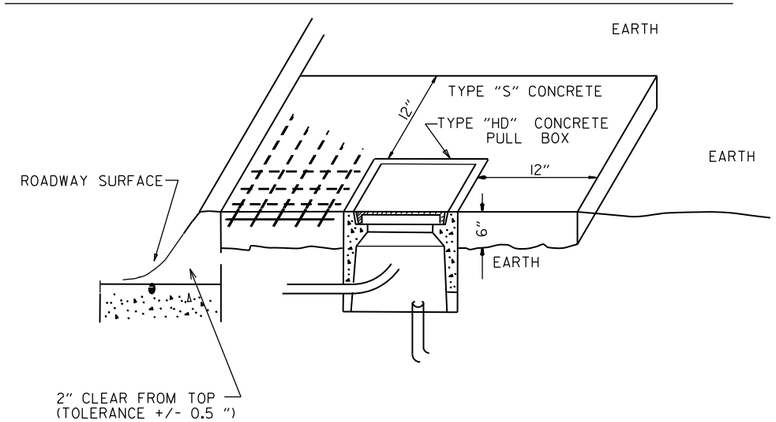

NOTE:
ALL TYPE 1 AND TYPE 2 HD CONCRETE PULL BOXES ARE INSTALLED WITH AN APRON OF CONCRETE 12" WIDE AND 7" IN DEPTH. ALL PAYMENT SHALL BE INCLUDED IN THE PRICE OF THE TYPE HD CONCRETE PULL BOX. THE CONCRETE PULL BOX SHALL BE INSTALLED FLUSH TO SURROUNDING GRADE UNLESS OTHERWISE INSTRUCTED BY THE ENGINEER. THE CONCRETE SHALL BE CLASS "S". THREE #6 REINFORCING BARS IN THE APRON ON ALL SIDES OF THE CONCRETE PULL BOX IS REQUIRED IN CONCRETE.

DATE	REVISION	FILMED
11-16-17	REVISED NOTES	
09-02-15	REVISED PULL BOX DEPTH	
09-12-13	ISSUED AS STANDARD DRAWING	
05-21-09	REVISED GROUNDING	
07-31-08	ADDED & REVISED CONDUIT ENTRY	
06-23-04	REVISED CLEARANCE AT CURB ENTRY	
01-04-02	ADDED REINFORCING TO BOX APRON	
07-02-01	REVISED	
12-27-99	REVISED NOTES	
11-18-98	ISSUED	

ARKANSAS STATE HIGHWAY COMMISSION

HEAVY DUTY PULL BOX

STANDARD DRAWING SD-6

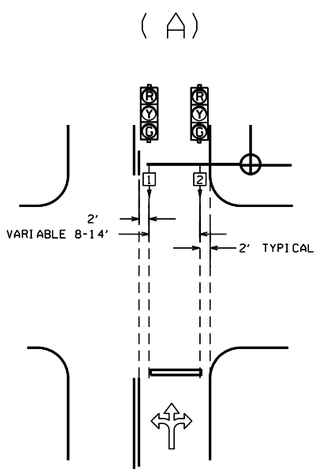

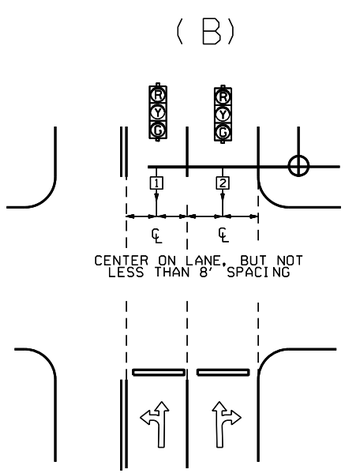

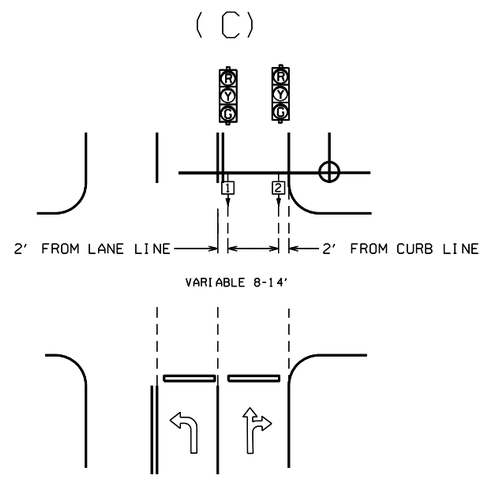

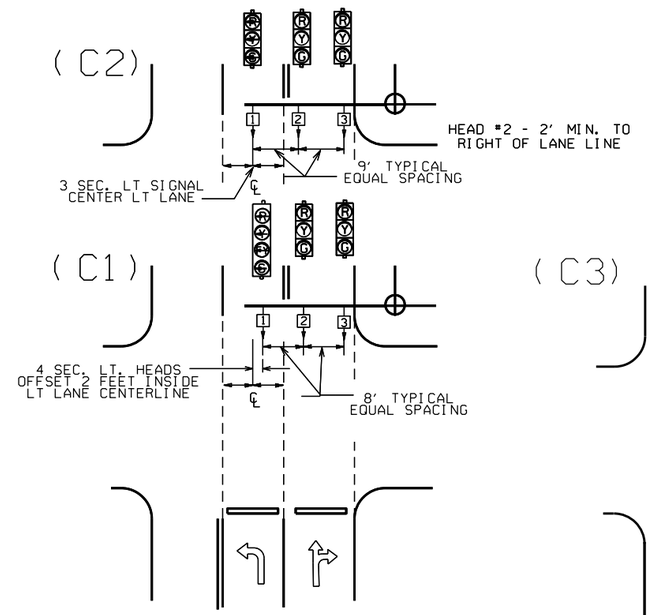

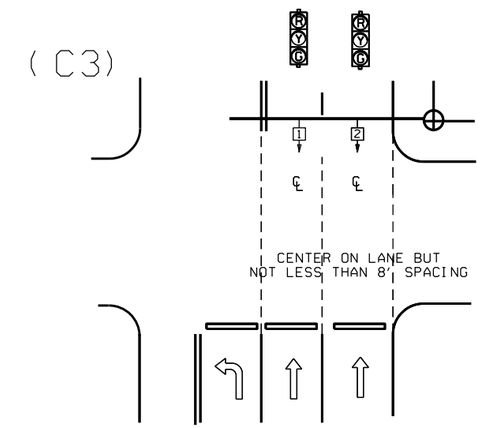

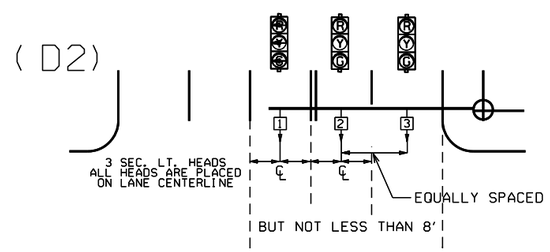

NOTE: WHERE LEFT TURN HEAD (HEAD 1 ON D1 AND D2) IS NOT CALLED FOR ON PLANS, MAST ARM LENGTH MAY STILL BE ALLOWED FOR FUTURE INSTALLATION. HEADS FOR THROUGH MOVEMENTS SHALL STILL BE ALIGNED WITH THROUGH LANES AS SHOWN ON DETAILS.

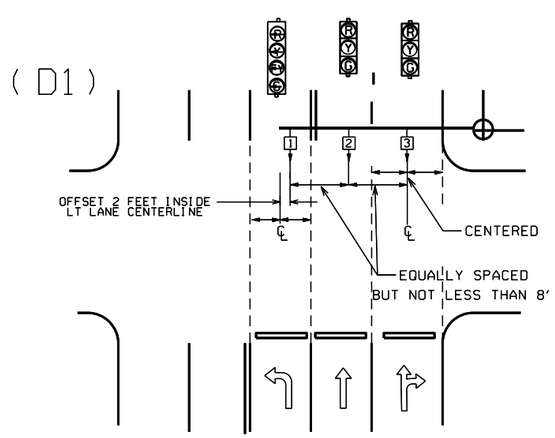

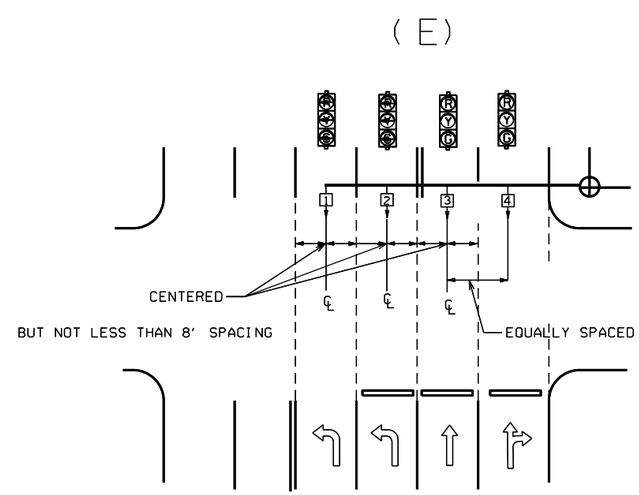

℄ = CENTER OF LANE FROM APPROACH SIDE

GENERAL NOTES:

1. FOUR SECTION "PROTECTED/PERMISSIVE" LEFT TURN HEADS SHOULD BE PLACED A MINIMUM OF TWO (2') FEET TO THE RIGHT OF THE CENTERLINE OF THE APPROACHING LEFT TURN LANE.

2. THREE SECTION "PROTECTED" LEFT TURN HEADS SHOULD BE PLACED ON THE CENTERLINE OF THE APPROACHING LEFT TURN LANE.

3. WHEN IT IS NECESSARY TO PLACE POLES OTHER THAN AS SHOWN ON PLAN SHEET(S) RESULTING IN MAST ARM EXTENDING MORE THAN TWO FEET PAST (TO THE LEFT OF) THE CENTERLINE OF THE APPROACHING LEFT TURN LANE, MAST ARM SHALL BE CUT TO APPROPRIATE LENGTH AS DETERMINED BY THE ENGINEER, AND A NEW END CAP PROVIDED. THE CONTRACTOR SHALL BE RESPONSIBLE FOR DETERMINING THIS PRIOR TO INSTALLING THE MAST ARM IF ADDITIONAL COMPENSATION IS REQUIRED.

4. SIGNAL HEAD SPACING SHALL, IN NO CASE, BE LESS THAN EIGHT (8') FEET BETWEEN HEADS ON CENTER, MEASURED HORIZONTALLY PERPENDICULAR TO THE APPROACH.

5. ALL SIGNAL HEADS SHOWN ON THIS DETAIL SHEET SHALL BE LOCATED ACCORDING TO THE DIMENSIONS SHOWN IN RELATION TO THE APPROACH SIDE OF THE INTERSECTION.

6. MAXIMUM MOUNTING HEIGHT OF SIGNAL FACES LOCATED BETWEEN 40 FEET AND 53 FEET FROM STOP BAR SHALL BE IN ACCORDANCE WITH FIGURE 4D-5 OF 2009 MUTCD.

DATE	REVISION	DATE FILM
12-8-16	REVISED NOTE 6	
9-12-13	ISSUED AS STANDARD DRAWING	
3-11-10	2009 MUTCD	
12-9-99	ISSUED	

ARKANSAS STATE HIGHWAY COMMISSION

SIGNAL HEAD PLACEMENT

STANDARD DRAWING SD-8

MAIN BREAKER NOT NEAR CONTROLLER CABINET SECONDARY REQUIRED

GROUND ROD - A 10' X 5/8" GROUND ROD SHALL BE INSTALLED IN THE CONCRETE PULL BOX FOR EACH POLE AND THE CONTROLLER. PAYMENT FOR THE GROUND ROD AND 1/2" NMC SHALL BE INCLUDED IN ITEM 701. THE CONCRETE PULL BOX AND CONDUCTOR BOX SHALL BE PAID FOR SEPARATELY.

WITH POWER ISOLATION ASSEMBLY

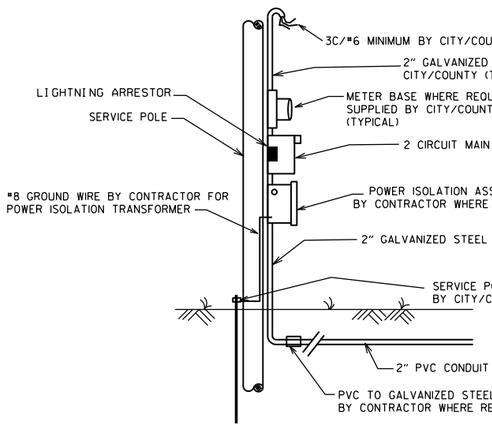

WITHOUT POWER ISOLATION ASSEMBLY

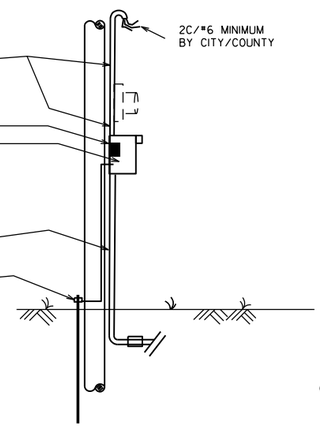

SECONDARY BREAKER BY CONTRACTOR (SUBSIDIARY)

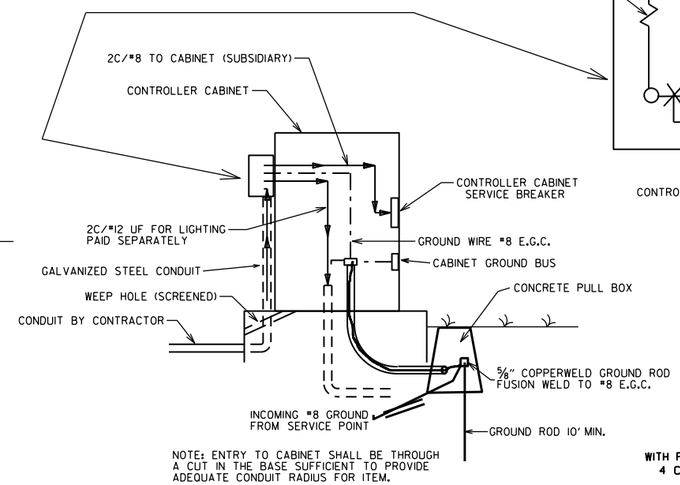

NOTE: ENTRY TO CABINET SHALL BE THROUGH A CUT IN THE BASE SUFFICIENT TO PROVIDE ADEQUATE CONDUIT RADIUS FOR ITEM.

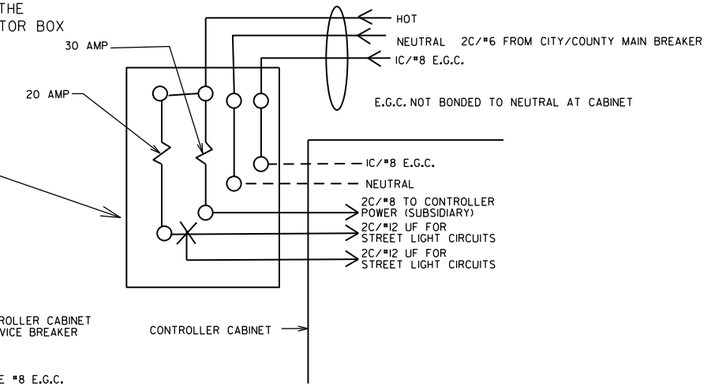

MAIN BREAKER WIRING (TYPICAL)

SERVICE GROUND IS TYPICALLY TIED TO NEUTRAL AT THE MAIN BREAKER. AS SUCH, CONTROLLER GROUND IS NOT TIED TO NEUTRAL AT SECONDARY BREAKER OR IN CONTROLLER CABINET.

NOTES TO CONTRACTOR AND AGENCY RESPONSIBLE FOR MAINTENANCE OF THE INTERSECTION (CITY/COUNTY):

ELECTRICAL SERVICE TYPICALLY FALLS INTO TWO CATEGORIES:
MAIN BREAKER NEAR CONTROLLER CABINET; AND MAIN BREAKER NOT NEAR CONTROLLER CABINET. THE CONTRACTOR'S AND THE CITY'S/COUNTY'S RESPONSIBILITY VARIES ACCORDINGLY AS INDICATED ON THESE DETAILS.

ALL SITUATIONS:
ELECTRICAL SERVICE SHALL BE PROVIDED BY THE CITY/COUNTY TO A SERVICE POLE WITH EXTERNAL RAINTIGHT BREAKER (MAIN BREAKER) AT A MUTUALLY ACCEPTABLE POINT WITHIN THE RIGHT-OF-WAY. SERVICE POINT INCLUDES GALVANIZED STEEL CONDUIT TO A POINT 18" BELOW GROUND LINE, TWO CIRCUIT MAIN BREAKER, LIGHTNING ARRESTOR, POWER ISOLATION ASSEMBLY WHERE REQUIRED, METER LOOP IF REQUIRED BY LOCAL UTILITY COMPANY, ELECTRICAL CONDUCTORS AND WEATHERHEAD. WHERE STREET LIGHTING IS INCLUDED AS PART OF SIGNAL INSTALLATION STREET LIGHTING CIRCUIT (2C/#12 A.W.G. UF RATED, TYPICAL) SHALL BE KEPT SEPARATE FROM THE CIRCUIT SERVING TRAFFIC SIGNAL. SERVICE WIRE AND WIRING FROM THE CONTROLLER TO MAIN BREAKER IS PROVIDED BY THE CONTRACTOR AS A PART OF THIS CONTRACT. WIRE AND WIRING FROM MAIN BREAKER, AND CONNECTION TO THE UTILITY IS THE RESPONSIBILITY OF THE CITY/COUNTY.

MAIN BREAKER NOT NEAR CONTROLLER CABINET:
THE MAIN BREAKER ASSEMBLY, GALVANIZED STEEL CONDUIT. WEATHERHEAD AND WIRE ABOVE MAIN BREAKER AND CONNECTION TO THE UTILITY SHALL BE PROVIDED BY CITY/COUNTY. CONTRACTOR SHALL PROVIDE AS PART OF CONTRACT SECONDARY BREAKER, CONDUIT, WIRE AND WIRING TO THE MAIN BREAKER.

MAIN BREAKER NEAR CONTROLLER CABINET:
ALL COMPONENTS OF THE SERVICE POINT WITH THE EXCEPTION OF THE WIRE AND WIRING ABOVE THE MAIN BREAKER IS FURNISHED AND INSTALLED BY THE CONTRACTOR. WIRING FROM MAIN BREAKER INCLUDING CONNECTION TO THE UTILITY, IS THE RESPONSIBILITY OF THE CITY/COUNTY. IF METER LOOP IS REQUIRED, METER BASE AND HARDWARE IS PROVIDED BY THE CITY/COUNTY AND INSTALLED BY THE CONTRACTOR.

WITH POWER ISOLATION ASSEMBLY
4 CIRCUIT MAIN BREAKER

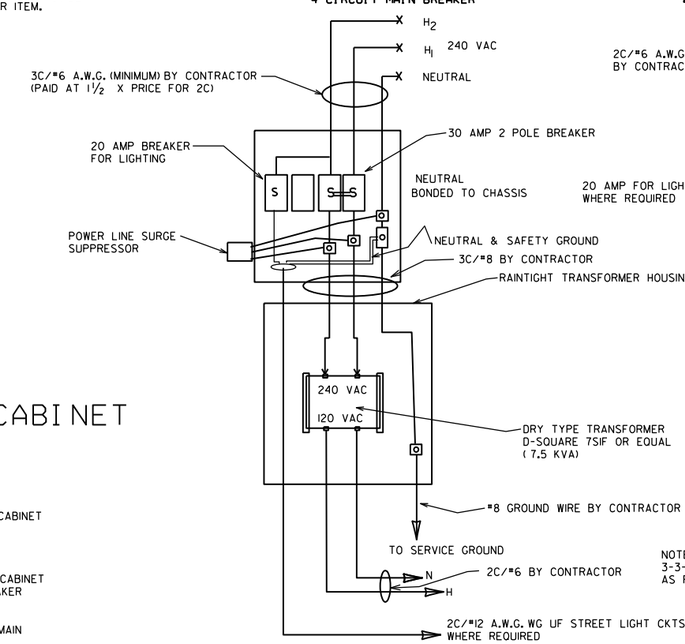

WITHOUT POWER ISOLATION ASSEMBLY
2 CIRCUIT MAIN BREAKER

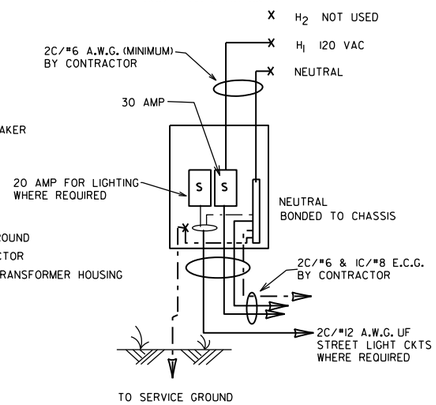

NOTE: ELECTRICAL GROUND CONDUCTOR (E.C.G.) ADDED 3-3-2003, CONSISTING OF A IC/#8 A.W.G. CU GREEN WIRE AS PER NATIONAL ELECT. CODES.

MAIN BREAKER NEAR CONTROLLER CABINET SECONDARY NOT REQUIRED

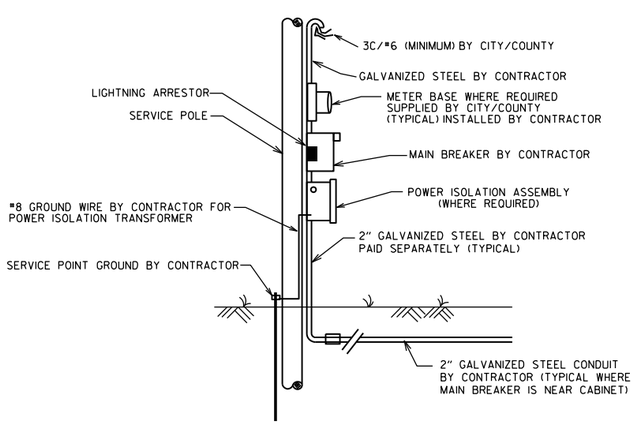

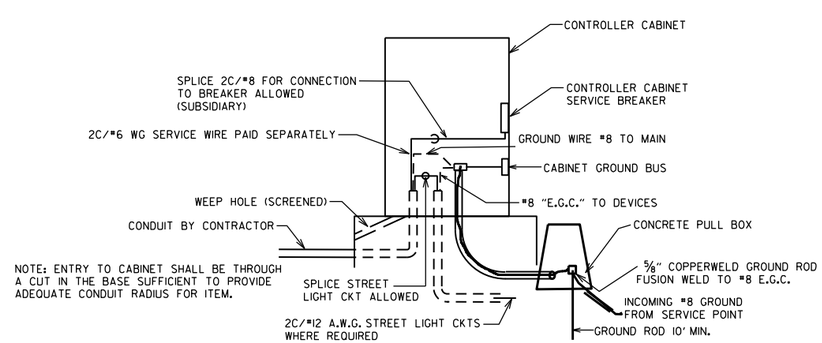

NOTE: ENTRY TO CABINET SHALL BE THROUGH A CUT IN THE BASE SUFFICIENT TO PROVIDE ADEQUATE CONDUIT RADIUS FOR ITEM.

DATE	REVISION	FILMED
11-07-19	REVISED	
11-16-17	REVISED NOTES	
09-12-13	ISSUED AS STANDARD DRAWING	
04-18-13	ADDED LIGHTNING ARRESTOR	
05-21-09	REVISED GROUNDING	
07-31-08	REVISED GROUNDING	
03-03-03	ADDED EGC NOTE	
09-26-01	REVISED	
12-27-99	REVISED	
07-28-99	REVISED	
02-05-99	ISSUED	

ARKANSAS STATE HIGHWAY COMMISSION

SERVICE POINT

STANDARD DRAWING SD-9

NOTES:
PEDESTRIAN AND TRAFFIC SIGNAL HEAD SIGNS:
EACH ITEM "TRAFFIC SIGNAL HEAD (4 SEC., 1-WAY)" SHALL INCLUDE A SPECIAL SIGN AS SHOWN, ATTACHED TO THE MAST ARM OR SPAN ASSEMBLY 12" TO THE RIGHT OF THE SIGNAL HEAD UNLESS REMOVED WITHIN THE SIGNAL PLAN NOTES.

EACH ITEM "TRAFFIC SIGNAL HEAD (3 SEC., 1-WAY)" TO BE USED AS A LEFT TURN INDICATION ONLY SHALL INCLUDE A SIGN (R10-10) AS SHOWN, ATTACHED TO THE MAST ARM OR SPAN ASSEMBLY 12" TO THE RIGHT OF THE SIGNAL HEAD.

EACH PEDESTRIAN PUSHBUTTON SHALL HAVE ONE R10-3E SIGN ATTACHED TO THE POLE ABOVE THE BUTTON. ALL SIGNS SHALL BE MANUFACTURED IN ACCORDANCE WITH SECTION 723 OF THE STANDARD SPECIFICATIONS FOR HIGHWAY CONSTRUCTION.

ALL SIGN BLANKS SHALL BE CONSTRUCTED OF ALUMINUM ALLOY (ASTM DESIGNATION B-209. ALLOY 5052-H38) WITH THICKNESS OF 0.100 INCH.

GENERAL NOTES:
1. MAST ARM POLES SHALL BE MOUNTED A MINIMUM OF FOUR (4') FEET BEHIND CURB OR SHOULDER.

2. OCTAGONAL POLES AND ARMS MEETING THE REQUIREMENTS OF THE PLANS SPECIFICATIONS CAN BE INSTALLED IN LIEU OF ROUND. ALL POLES AND ARMS IN A JOB MUST BE THE SAME SHAPE.

3. MINIMUM STRUCTURAL REQUIREMENTS:
DESIGN SPECIFICATIONS: AASHTO STANDARD SPECIFICATIONS FOR STRUCTURAL SUPPORTS FOR HIGHWAY SIGNS, LUMINAIRES AND TRAFFIC SIGNALS, 4TH EDITION (2001) WITH 2003 AND 2006 INTERIMS.

USE FATIGUE CATEGORY I FOR ALL STRUCTURES ON ROUTES WHERE THE SPEED LIMIT IS 65 MPH AND GREATER AT THE STRUCTURE LOCATION AND ON ROUTES WHERE THE SPEED LIMIT IS GREATER THAN 45 MPH WITH AN MAST ARM OF 60' OR LONGER.

USE FATIGUE CATEGORY II FOR ALL STRUCTURES ON ROUTES WHERE THE SPEED LIMIT IS LESS THAN 65 MPH AND GREATER THAN 45 MPH WITH MAST ARMS LESS THAN 60' AND ON ROUTES WHERE THE SPEED LIMITS OF 45 MPH AND LESS WITH AN MAST ARM OF 60' OR LONGER.

USE FATIGUE CATEGORY III FOR ALL STRUCTURES WHERE THE SPEED LIMIT IS 45 MPH AND LESS AND MAST ARMS LESS THAN 60'.

CONSTRUCTION SPECIFICATIONS:
STANDARD SPECIFICATIONS FOR HIGHWAY CONSTRUCTION (CURRENT EDITION) WITH APPLICABLE SUPPLEMENTAL SPECIFICATIONS AND SPECIAL PROVISIONS.

BASE WIND SPEED: 90 MPH.

STEEL MEMBERS CONSIDERED MAIN LOAD CARRYING MEMBERS WITH A THICKNESS GREATER THAN ½" SHALL MEET THE LONGITUDINAL CHARPY V-NOTCH TEST SPECIFIED IN SUBSECTION 807.05 OF THE STANDARD SPECIFICATIONS.

DEAD LOAD: AS A MINIMUM, DESIGN SHALL BE BASED ON THE FIXED ATTACHMENTS SHOWN BELOW OR AS MODIFIED IN THE PLANS.

ALL SIGNAL HEADS TO BE ONE WAY, TWELVE (12") INCH AND HAVE FIVE (5") INCH BACK PLATES:

SIGNAL HEADS AT THE END OF MAST ARM - ONE 4 SEC., 85 LB., 14.5 SQ. FT., ONE SIGN MOUNTED 3 FEET FROM SIGNAL HEAD (2'-0" X 2'-6"; 20 LB.) REMAINING SIGNAL HEADS SPACED AT 8 FT. (3 SEC., 56 LB., 8.3 SQ. FT.):
DESIGN TO ACCOMMODATE:
2 SIGNAL HEADS FOR MAST ARMS 10 FT. TO 16 FT.
3 SIGNAL HEADS FOR MAST ARMS 18 FT. TO 24 FT.
4 SIGNAL HEADS FOR MAST ARMS OVER 26 FT.

STREET NAME SIGN - 72" X 18", 36 LB., MOUNTED SUCH THAT OUTSIDE EDGE IS NOT GREATER THAT 12 FT. FROM POLE. DEPENDING UPON POSITION OF SIGNAL HEAD ADJACENT TO POLE, SIGN MAY OVERLAP POLE SHAFT.
ROADWAY LUMINAIRES (WHERE REQUIRED ON PLAN SHEET) - VARIABLE ARM LENGTH (MAX. WT. 75 LB., 3.3 SQ. FT.)
PEDESTRIAN SIGNALS - TWO 1 SEC., 12 INCH MOUNTED 8 FT. FROM BASE OF POLE. POST MOUNTED 3 SEC. SIGNAL HEAD AT 10 FT. ON SIDE OF POLE.

4. POLE/MAST ARM CAP - POLE AND MAST ARM CAPS SHALL BE PROVIDED, FABRICATED OF EITHER STEEL OR CAST ALUMINUM.

5. HAND HOLE - HAND HOLES SHALL BE 4 IN. X 6 IN. FOR STANDARD, AND 3 IN. X 5 IN. FOR PED POLES. MINIMUM PLACED APPROXIMATELY 12 INCHES FROM BASE, AND SHALL BE FIXED WITH A BOLT DOWN COVER. A VACCUM FORMED ABS COVER IS AN ACCEPTABLE ALTERNATE TO STEEL. POLES GREATER THAN 21 FT. IN HEIGHT (FOR ROADWAY LUMINAIRE ATTACHMENT) SHALL INCLUDED A HAND HOLE WITHIN 12 INCHES OF MAST ARM(S) ATTACHMENT(S).

6. POLE/MAST ARM TAPER SLOPE - AVERAGE TAPER OF SIGNAL MAST ARMS AND POLE SHAFT SHALL BE 0.125 TO 0.15 INCHES PER FOOT.

MAST ARM CENTERLINE ANGLE AT ATTACHMENT POINT WITH POLE SHALL MAINTAIN NOT LESS THAN 0.5 DEGREES OR MORE THAN 4 DEGREES POSITIVE SLOPE WITH A LINE PERPENDICULAR TO THE POLE CENTERLINE. THE MAST ARM SHALL MAINTAIN A POSITIVE SLOPE AFTER IT IS PLACED UNDER LOAD.

7. NUT COVERS - EACH POLE SHALL INCLUDE A BOLT DOWN NUT COVER FOR EACH ANCHOR BOLT.

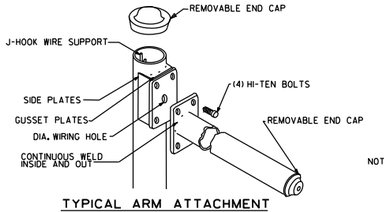

TYPICAL ARM ATTACHMENT

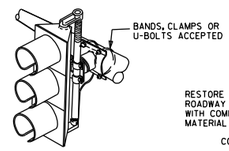

NOTE: THE SIGNAL SHALL BE CONNECTED TO THE MAST ARM BY BRACKETING AS DIRECTED BY THE ENGINEER.

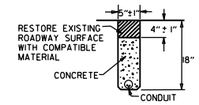

TRENCHING DETAIL
(FOR SAW CUT TRENCH IN ROADWAY)

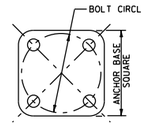

ANCHOR BASE

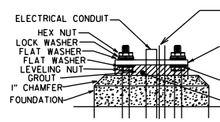

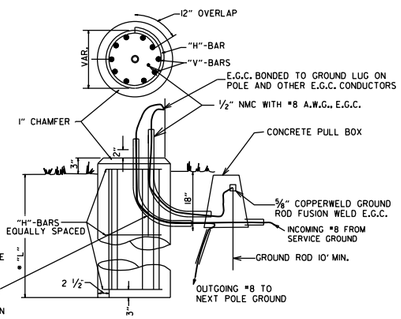

THE SWEEPING "L" IN THE FOUNDATION SHALL BE THE SAME SIZE AS THE CONDUIT FROM THE FOUNDATION TO THE PULL BOX AS SHOWN ON THE PLANS.

THE GROUND ROD SHALL BE FUSION WELDED TO A 1C/#8 A.W.G. SOLID COPPER GROUND WIRE. ATTACHMENT TO THE PRIMARY GROUND MAY BE BY AN APPROVED CLAMP. THE GROUND ROD IS TO BE LOCATED IN THE CONCRETE PULL BOX.

TYPICAL FOUNDATION DETAILS

POLE FOUNDATION MINIMUM DIMENSIONS AND STEEL REINFORCING. ALL REINFORCING STEEL SHALL BE GRADE 40 MIN.

ARM LENGTH	FOUNDATION DIAMETER	DEPTH "L"*	STEEL VERTICAL	STEEL HORIZONTAL	STEEL O.C.
PED	30"	7'-0"	12-#7 (6'-6")	10-#4	8.44"
2' TO 12'	30"	10'-6"	12-#7 (10'-0")	15-#4	8.42"
OVER 12' TO 20'	30"	11'-6"	12-#7 (11'-0")	16-#4	8.66"
OVER 20' TO 35'	36"	12'-6"	13-#8 (12'-0")	17-#4	8.88"
OVER 35' TO 50'	36"	13'-6"	13-#8 (13'-0")	19-#4	8.56"
OVER 50' TO 72'	42"	14'-6"	18-#8 (14'-0")	20-#4	8.74"
TWINS TO 20'	30"	16'-0"	12-#6 (15'-6")	22-#4	8.76"
TWINS OVER 20' TO 44'	36"	16'-0"	13-#8 (15'-6")	22-#4	8.76"
TWINS OVER 44' TO 50'	42"	16'-0"	18-#8 (15'-6")	22-#4	8.76"
TWINS OVER 50' TO 72'	42"	16'-6"	18-#8 (16'-0")	23-#4	8.64"

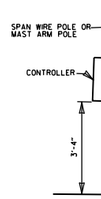

SPAN WIRE SUPPORT POLE AND MAST ARM POLE MOUNTED

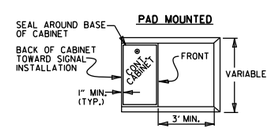

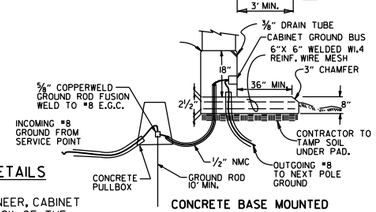

CONCRETE BASE MOUNTED CABINET DETAILS

CONTROLLER CABINET MOUNTING DETAILS

NOTE:
UNLESS OTHERWISE DIRECTED BY THE ENGINEER, CABINET ORIENTATION SHALL BE SUCH THAT THE BACK OF THE CABINET IS PARALLEL TO THE STREET AND POSITIONED TO ALLOW VISIBILITY OF THE SIGNAL DISPLAY WHILE OBSERVING THE CONTROLLER FRONT PANEL.

8. GROUND ROD - A 10' X ⅝" GROUND ROD SHALL BE INSTALLED IN THE CONCRETE PULL BOX FOR EACH POLE AND THE CONTROLLER. PAYMENT FOR THE GROUND ROD AND ½" NMC SHALL BE INCLUDED IN ITEM 714 FOR SIGNAL POLES AND ITEM 701 FOR THE CONTROLLER. THE CONCRETE PULL BOX AND CONDUCTOR BOX SHALL BE PAID SEPERATELY.

9. POLE BASE/FOUNDATION - ANCHOR BOLTS SHALL INCLUDE AS A MINIMUM, ONE LEVELING NUT, TWO FLAT WASHERS, ONE LOCK WASHER, AND ONE HEX NUT. PERIMETER OF ANCHOR BASE SHALL BE GROUTED WITH A ¼" WEEP HOLE. ALL CONCRETE SHALL BE CLASS "S" OR GREATER.

10. CONCRETE - ALL CONCRETE FOR CONTROLLER CABINET AND POLE FOUNDATIONS SHALL BE CLASS "S" OR GREATER.

11. PEDESTRIAN PHASES - PEDESTRIAN MOVEMENTS SHALL BE PUSH BUTTON ACTUATED AND CONCURRENTLY TIMED, UNLESS OTHERWISE INDICATED ON THE PLAN SHEET(S). FURNISHING AND INSTALLING PEDESTRIAN PUSH SWITCH SHALL BE CONSIDERED SUBSIDIARY TO THE ITEM 707 PEDESTRIAN SIGNAL HEAD.

* WHEN THE GROUND ELEVATION AT THE POLE IS LOWER THAN THE ROADWAY ELEVATION, THE LENGTH OF FOUNDATION ABOVE THE GROUND MAY BE INCREASED TO PROVIDE THE REQUIRED SIGNAL HEAD CLEARANCE ABOVE THE ROADWAY. WHEN THE REQUIRED LENGTH OF FOUNDATION ABOVE THE GROUND IS 18" OR LESS, NO INCREASE IN DEPTH "L" WILL BE REQUIRED. WHEN THE REQUIRED LENGTH OF FOUNDATION ABOVE THE GROUND IS 5'-6" OR LESS, INCREASE DEPTH "L" BY 1'-0". FOR LENGTHS GREATER THAN 5'-6", DEPTH "L" SHALL BE ADJUSTED AS DIRECTED BY THE ENGINEER. LONGITUDINAL REINFORCING, AS SHOWN IN THE TABLE, SHALL BE PROVIDED FOR THE LENGTH OF THE EXTENDED SHAFT AND #4 TIES SHALL BE PROVIDED AT A SPACING NOT TO EXCEED 9" ON CENTERS. PAYMENT WILL BE IN ACCORDANCE WITH SECTION 714 TRAFFIC SIGNAL MAST ARM AND POLE WITH FOUNDATION OF THE STANDARD SPECIFICATIONS.

** IN LIEU OF DESIGNING THE STRUCTURE TO RESIST PERIODIC GALLOPING, A VIBRATORY MITIGATION DEVICE MAY BE PROVIDED BY THE POLE MANIFACTURER. THE VIBRATORY MITIGATION DEVICE SHALL BE AN ANTI-GALLOPING PANEL CONSISTING OF A 60" X 16" X 0.125" SIGN BLANK MOUNTED NEAR THE END OF THE MAST ARM NOT TO EXCEED ONE QUARTER OF THE LENGTH OF THE MAST ARM FROM THE END OF THE MAST ARM WITH THE LONG AXIS OF THE PANEL COLLINEAR WITH THE LONG AXIS OF THE MAST ARM. THE PANEL SHOULD BE MOUNTED AT SUCH THE HEIGHT AS TO PROVIDE AT LEAST 6" CLEAR FROM THE TOP OF ANY SIGNAL ASSEMBLY OF SIGN PANEL LOCATED ON THE MAST ARM WITHIN THE LENGTH OF THE ANTI-GALLOPING PANEL.

TRUCK-INDUCED GUST LOADS SHALL BE EXCLUDED FOR FATIGUE DESIGN FOR ALL STRUCTURES EXCEPT MAST ARMS MOUNTED OVER FACILITIES WITH POSTED SPEEDS OF 65 MPH OR GREATER AT THE LOCATION OF THE STRUCTURE.

SIGNAL OPERATION NOTES:

FLASHING OPERATION - PRIOR TO NORMAL OPERATION, SIGNAL SHALL BE FLASHED FOR A PERIOD OF 3 TO 5 WORK DAYS OR AS DIRECTED BY THE ENGINEER. SIGNAL SHALL BE PLACED IN OPERATION ONLY ON A REGULAR WORK DAY, EXCEPT FRIDAY.

THE CONTRACTOR MAY BE REQUIRED TO ALTER THE FLASHING DISPLAY DURING THE TEMPORARY FLASH PERIOD. AT THE TIME THE INTERSECTION IS PLACED IN PERMANENT OPERATION, THE FLASH SEQUENCE SHALL THEN BE RETURNED TO THAT INDICATED ON THE PLAN SHEETS. NO ADDITIONAL COMPENSATION SHALL BE ALLOWED FOR THESE ALTERATION IN FLASH SEQUENCE.

SPECIAL NOTE: 90 MPH WIND ZONE DESIGN, SEE NOTE 3. MINIMUM STRUCTURAL REQUIREMENTS.

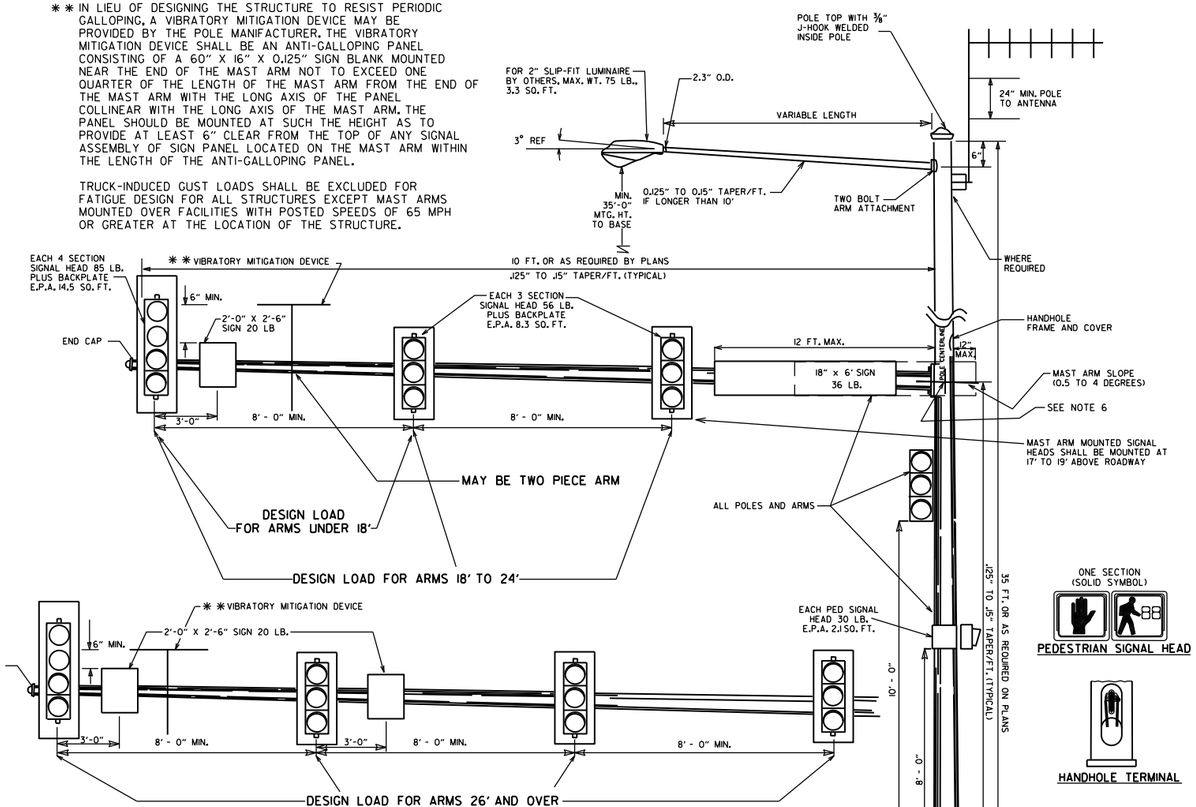

PEDESTRIAN SIGNAL HEAD

HANDHOLE TERMINAL

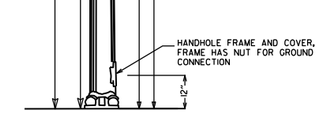

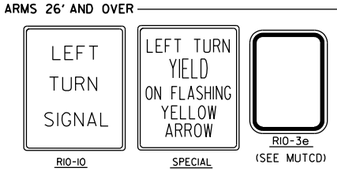

R10-10 SPECIAL R10-3e (SEE MUTCD)

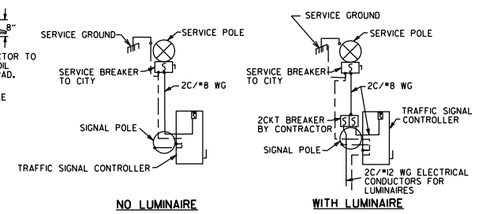

NO LUMINAIRE WITH LUMINAIRE

SERVICE DISCONNECT
NOTE: ELECTRICAL GROUND CONDUCTOR IS BONDED TO ALL METAL ENCLOSURES

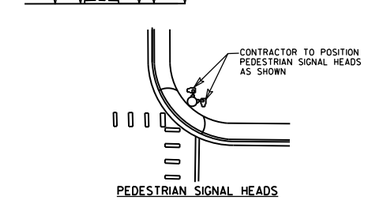

PEDESTRIAN SIGNAL HEADS

DATE	REVISION	FILMED
11-16-17	REVISED NOTES, ADDED PEDESTRIAN SIGNAL HEAD DETAIL, ADDED HANDHOLE TERMINAL DETAIL, ADDED TRENCHING DETAIL	
02-27-14	REVISED NOTES.	
09-12-13	ISSUED AS STANDARD DRAWING	
12-08-16	REVISED NOTES	
02-27-14	REVISED NOTES	
09-12-13	ISSUED AS STANDARD DRAWING	
07-21-11	REVISED VMD, SIGNAL HEADS	
05-21-09	REVISED GROUNDING	
07-31-08	REVISED GROUNDING	
04-25-08	ADDED VIBRATORY MITIGATION DEVICE & NOTES	
04-18-08	REVISED AASHTO NOTES	
04-17-08	REVISED TO 2001 AASHTO STANDARDS	
10-12-04	REVISED CABINET ORIENTATION	
06-23-04	REVISED	
05-11-04	REV. NOTE 3/AASHTO REQUIREMENTS	
06-11-01	REV. NOTES & POLE MAST ARM SLOPE	
04-11-01	REVISED POLE TAPERS	
04-25-00	REV. NOTES & SIGNAL HEAD PLACEMENT	
11-22-99	REVISED FOUNDATION DETAILS	
11-17-98	REVISED DETAILS AND NOTES	
11-21-95	ISSUED	

ARKANSAS STATE HIGHWAY COMMISSION

STEEL POLE WITH MAST ARM

STANDARD DRAWING SD-11

SUPERELEVATION TABLE FOR TWO - WAY TRAFFIC (4% MAXIMUM)

DEGREE OF CURVE	30 MPH e	30 MPH Ls (FT) MINIMUM	30 MPH Ls (FT) DESIRABLE
0° 15'	NC		
0° 30'			
0° 45'			
1° 00'			
1° 15'			
1° 30'			
1° 45'			
2° 00'			
2° 15'	RC	72	100
2° 30'			
2° 45'			
3° 00'			
3° 15'	0.022	75	
3° 30'			
3° 45'	0.024	79	
4° 00'			
4° 15'			
4° 30'			
4° 45'	0.026	83	
5° 00'			
5° 30'			
6° 00'	0.028	86	125
6° 30'			
7° 00'	0.030	90	
7° 30'			
8° 00'			
8° 30'	0.032	93	
9° 00'			
9° 30'			
10° 00'	0.034	97	
10° 30'			
11° 00'			
11° 30'			
12° 00'	0.036	100	
12° 30'			
13° 00'			
13° 30'			
14° 00'	0.038	104	
14° 30'			
15° 00'			
15° 30'			
16° 00'			
16° 30'	0.040	108	150

D MAX = 22° 45'

DEGREE OF CURVE	35 MPH e	35 MPH Ls (FT) MINIMUM	35 MPH Ls (FT) DESIRABLE
0° 15'	NC		
0° 30'			
0° 45'			
1° 00'			
1° 15'			
1° 30'			
1° 45'	RC	78	100
2° 00'			
2° 15'			
2° 30'	0.022	82	
2° 45'	0.024	86	125
3° 00'			
3° 15'			
3° 30'	0.026	90	
3° 45'			
4° 00'			
4° 15'	0.028	94	
4° 30'			
4° 45'	0.030	98	
5° 00'			
5° 30'	0.032	101	
6° 00'			
6° 30'	0.034	105	150
7° 00'			
7° 30'	0.036	109	
8° 00'			
8° 30'	0.038	113	
9° 00'			
9° 30'			
10° 00'			
10° 30'			
11° 00'			
11° 30'	0.040	117	

D MAX = 15° 15'

DEGREE OF CURVE	40 MPH e	40 MPH Ls (FT) MINIMUM	40 MPH Ls (FT) DESIRABLE
0° 15'	NC		
0° 30'			
0° 45'			
1° 00'			
1° 15'	RC	84	100
1° 30'			
1° 45'			
2° 00'	0.022	88	
2° 15'	0.024	92	125
2° 30'	0.026	97	
2° 45'			
3° 00'	0.028	101	
3° 15'			
3° 30'			
3° 45'	0.030	105	
4° 00'			
4° 15'	0.032	109	150
4° 30'			
4° 45'			
5° 00'	0.034	113	
5° 30'			
6° 00'	0.036	118	
6° 30'			
7° 00'	0.038	122	
7° 30'			
8° 00'	0.040	126	

D MAX = 10° 30'

DEGREE OF CURVE	45 MPH e	45 MPH Ls (FT) MINIMUM	45 MPH Ls (FT) DESIRABLE
0° 15'	NC		
0° 30'			
0° 45'			
1° 00'	RC	90	125
1° 15'			
1° 30'	0.022	95	
1° 45'	0.024	99	
2° 00'	0.026	104	
2° 15'			
2° 30'	0.028	108	150
2° 45'	0.030	113	
3° 00'			
3° 15'	0.032	117	
3° 30'			
3° 45'	0.034	122	
4° 00'			
4° 15'			
4° 30'	0.036	126	
4° 45'			
5° 00'	0.038	131	
5° 30'			
6° 00'	0.040	135	

D MAX = 8° 00'

ABBREVIATIONS

NC - NORMAL CROWN
RC - REVERSE CROWN, SUPERELEVATION AT NORMAL CROWN SLOPE
e - RATE OF SUPERELEVATION (FT. PER FT.)
Ls - LENGTH OF SUPERELEVATION TRANSITION (FT.)
L - DISTANCE FROM BEGINNING OF SUPERELEVATION TRANSITION TO ANY POINT (FT.)
d - WIDTH OF PAVEMENT (FT.) OR WIDTH OF SUBGRADE (FT.)
C - NORMAL CROWN (FT.)

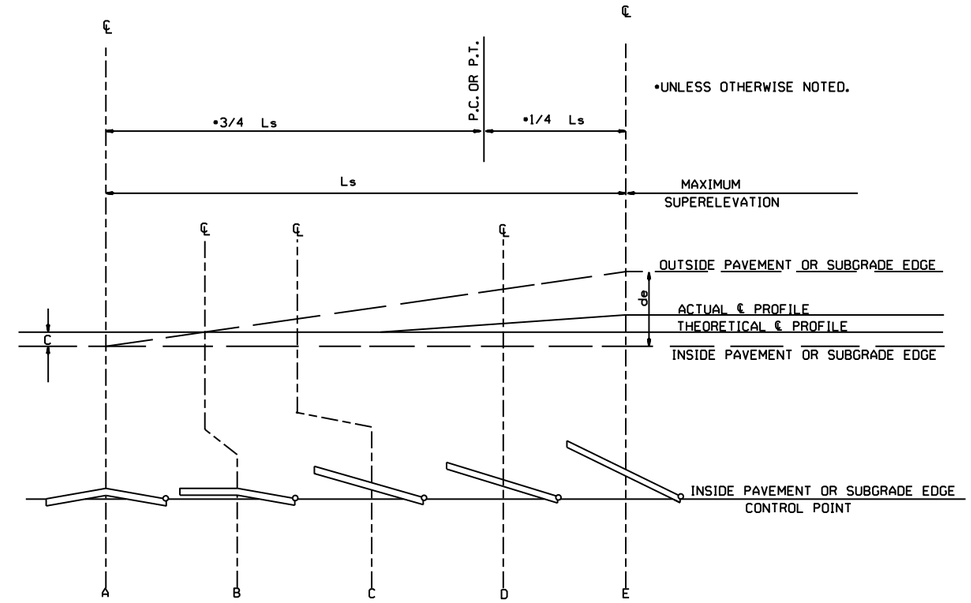

STANDARD METHOD WHEN SUPERELEVATION REVOLVES AROUND INNER SUBGRADE POINT OR INNER PAVEMENT EDGE

NOTE: MAINTAIN NORMAL CROWN ON INSIDE UNTIL SUPERELEVATION EXCEEDS 2C.

SUPERELEVATION FORMULA $= \frac{Lde}{Ls}$

GENERAL NOTES

1. ON PAVEMENT WITH TWO-WAY TRAFFIC, THE SUPERELEVATION SHALL BE REVOLVED ON THE INSIDE PAVEMENT EDGE UNLESS OTHERWISE NOTED ON THE PLANS
2. SUPERELEVATION VALUES SHOWN ON THE CROSS SECTIONS ARE VALUES (+) OR (-) TO BE ADDED TO OR SUBTRACTED FROM THE POINT OF CONTROL.
3. LENGTHS FOR L MAY BE ROUNDED IN MULTIPLES OF 25 FT. OR 50 FT. TO PERMIT SIMPLER CALCULATIONS.
4. PAVEMENTS WIDER THAN 2 LANES SHALL HAVE ADDITIONAL TRANSITION LENGTHS AS FOLLOWS:

3 LANE UNDIVIDED - - - - - +20%
4 LANE UNDIVIDED - - - - - +50%
5 LANE UNDIVIDED - - - - - +80%
6 LANE UNDIVIDED - - - - - +100%

NOTE: MAINTAIN NORMAL CROWN ON INSIDE UNTIL SUPERELEVATION EXCEEDS 2C.

RATE OF SUPERELEVATION SHALL BE COMPUTED ON STRAIGHT LINE METHOD USING APPLICABLE Ls.

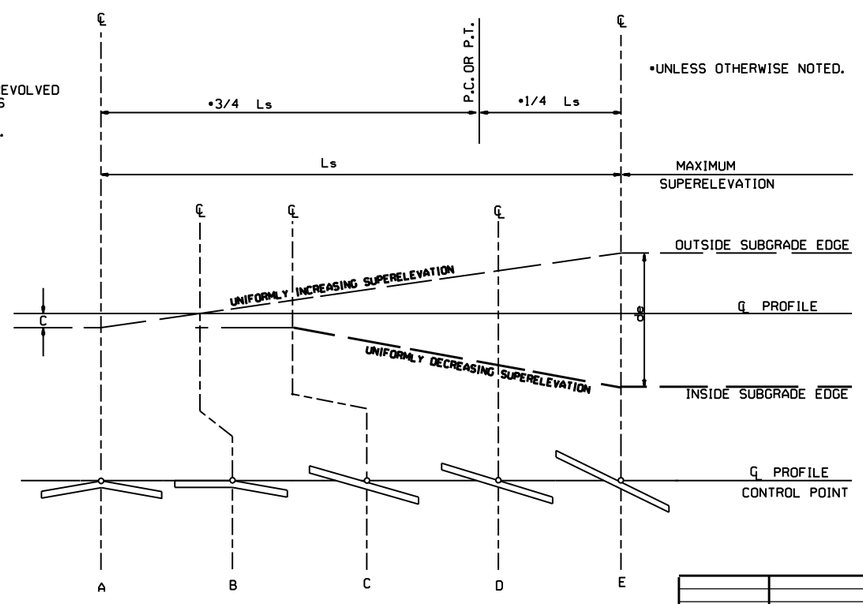

STANDARD METHOD WHEN SUPERELEVATION REVOLVES AROUND CENTER LINE

DATE	REVISION	DATE FILMED
11-07-19	ISSUED	

ARKANSAS STATE HIGHWAY COMMISSION

TABLES AND METHOD OF SUPERELEVATION FOR TWO-WAY TRAFFIC (4% MAXIMUM)

STANDARD DRAWING SE-3

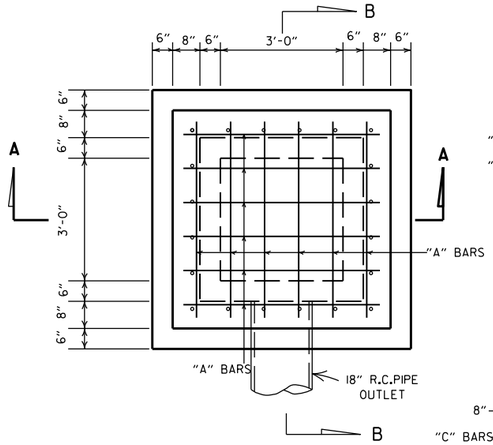

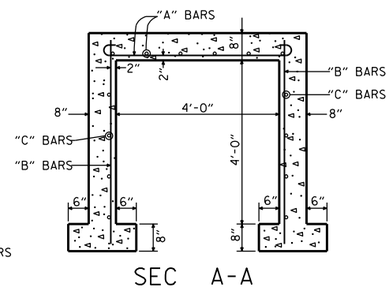

SEC A-A

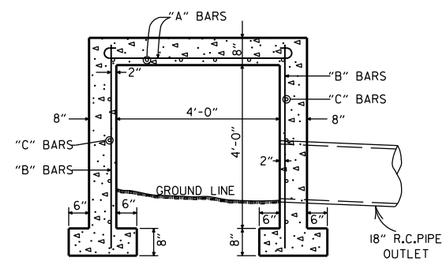

SEC B-B

NOTE: MAX FILL HEIGHT ABOVE TOP OF BOX = 13'-0".

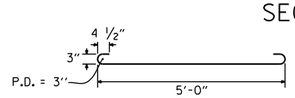

"A" BARS

STEEL SCHEDULE

BARS	NUMBER	LENGTH	SPACING
"A"	12	6'-0"	10"
"B"	20	5'-0"	10 1/2"
"C"	16	5'-0"	12"

ALL STEEL TO BE #4 BARS

QUANTITIES

CONCRETE 3.31 CU. YDS.
REINFORCING STEEL 168 LB.

GENERAL NOTE:

THE PAY ITEMS FOR REINFORCED CONCRETE SPRING BOXES SHALL BE FOR THE QUANTITIES OF CONCRETE OF THE CLASS SPECIFIED, REINFORCING STEEL, EXCAVATION FOR STRUCTURES AND 18" R.C. PIPE CULVERT.

REINFORCED CONCRETE SPRING BOX

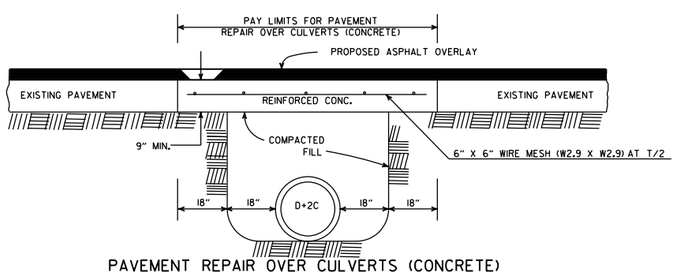

PAVEMENT REPAIR OVER CULVERTS (CONCRETE)

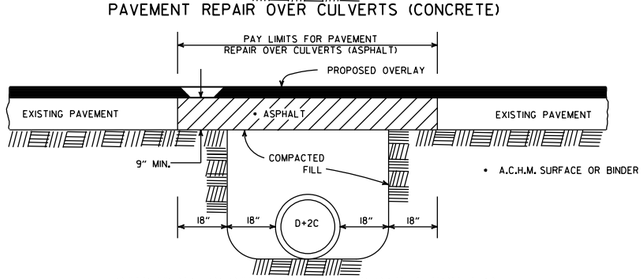

PAVEMENT REPAIR OVER CULVERTS (ASPHALT)

DETAIL SHOWING REPAIR OF EXISTING PAVEMENT AT CULVERT INSTALLATIONS

* A 2" MIN. HIGH CURB IS REQUIRED WHEN CONCRETE WALK IS ADJACENT TO THE HAND RAILING. PAYMENT FOR CURB SHALL BE CONSIDERED INCLUDED IN THE PRICE BID FOR CONCRETE WALKS.

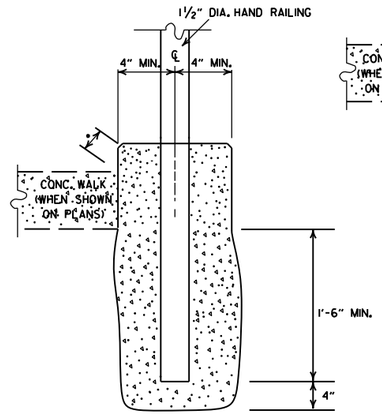

DETAIL OF HAND RAILING SET IN CONCRETE

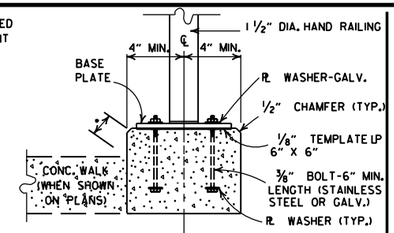

POST CONNECTION TO WALL

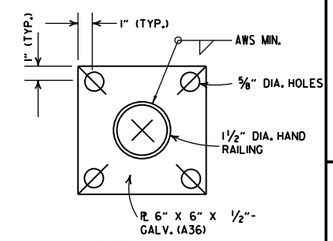

BASE PLATE

POST CONNECTION DETAILS

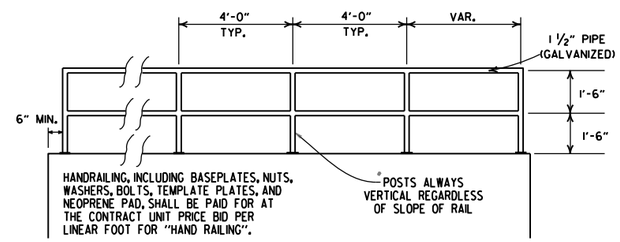

HAND RAILING SHALL CONFORM TO SECTION 633.

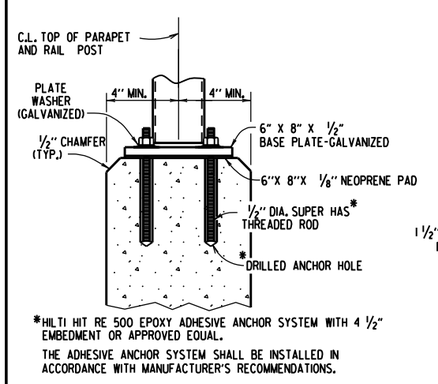

*HILTI HIT RE 500 EPOXY ADHESIVE ANCHOR SYSTEM WITH 4 1/2" EMBEDMENT OR APPROVED EQUAL.

THE ADHESIVE ANCHOR SYSTEM SHALL BE INSTALLED IN ACCORDANCE WITH MANUFACTURER'S RECOMMENDATIONS.

POST CONNECTION TO WALL

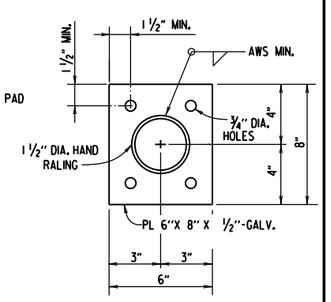

BASE PLATE

DETAILS OF ALTERNATE POST ANCHOR SYSTEM
(EPOXY ADHESIVE ANCHORS)

HAND RAILING DETAILS

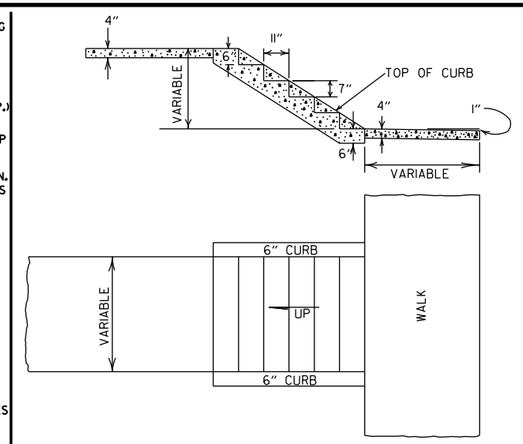

GENERAL NOTES

1. RISE AND TREAD DIMENSIONS OF STEPS MAY BE VARIED AS DIRECTED BY THE ENGINEER, HOWEVER, TREAD WIDTHS SHALL BE 11" MIN. ALL STEPS IN A FLIGHT SHALL HAVE CONSISTENT TREAD & RISER DIMENSIONS.
2. 1" TRANSVERSE EXPANSION JOINTS SHALL BE PLACED IN CONCRETE WALKS AT 45' INTERVALS.

DETAILS OF CONCRETE STEPS & WALKS

DATE	REVISION	DATE FILMED
10-25-18	REVISED DETAIL SHOWING REPAIR OF EXISTING PAVEMENT AT CULVERT INSTALLATIONS	
9-12-13	REVISED REINFORCED CONCRETE SPRING BOX	
7-26-12	REMOVED RETAINING WALL DETAILS & REVISED HAND RAILING DETAILS	
4-17-08	REV. JOINT & FOOTING STEP DETAILS	
11-29-07	REVISED RETAINING WALL DRAINAGE	
5-25-06	REVISED PVMT REPAIR OVER CULVERTS (CONC); REVISED REINFORCED CONC SPRING BOX	
10-9-03	REVISED PIPE RAILING DETAILS TO HAND RAILING DETAILS	
4-10-03	REVISED RETAINING WALL DRAWING	
8-22-02	ADDED HAND RAILING DETAIL	
11-16-01	REVISED PVMT REPAIR OVER CULVERTS (CONC); CORRECTED SPELLING IN GENERAL NOTES	
11-18-98	ADDED GENERAL NOTES TO CONCRETE STEPS & WALKS	
7-02-98	ENLARGED PIPE	
4-03-97	ADDED NOTE TO STEEL BAR SCHED.	
10-18-96	CORRECTED SPELLING	
4-26-96	ADD WEEP HOLE;REV. JOINT SPACING IN RET. WALL	
6-2-94	CHANGED CONST. TO CONTRACTION JOINT	
10-1-92	CHANGED MESH FABRIC TO WIRE MESH	10-1-92
8-15-91	DELETED HDWL MODIFICATION DETAIL	8-15-91
11-8-90	DELETED COLD MIX FROM CULV'T. REPAIR	11-8-90
11-30-89	REV. RETAINING WALL STEEL SCHEDULE	11-30-89
11-17-88	V. BARS BEHIND ARROW	665-11-17-88
7-15-88	REV. PAVEMENT REPAIR ADDED HDWL. MODS, DEL. PIPE UNDERDRAINS	649-7-15-88
11-1-84	REV. TRENCH FOR PIPE UNDERDRAIN	510-11-1-84
1-4-83	ELIMINATED CONC. CLASS & ADDED CHAMFER NOTE	682-1-4-83
3-2-81	SPELLING OF "UNDERDRAIN"	721-3-2-81
4-20-79	REV. UNDERDRAIN DET& PAVEMENT REPAIR	674-4-20-79
2-2-76	12"MIN. GRAN. MAT'L. OVER PIPE	919-2-2-76
4-10-75	REM. SPECS. FOR GRAN. MAT'L.	568-4-10-75-853
5-22-74	GRANULAR MAT'L. TO BE SB-3	567-5-22-74-740
10-2-72	REVISED AND REDRAWN	564-10-16-72

ARKANSAS STATE HIGHWAY COMMISSION

DETAILS OF SPECIAL ITEMS

STANDARD DRAWING SI - 1

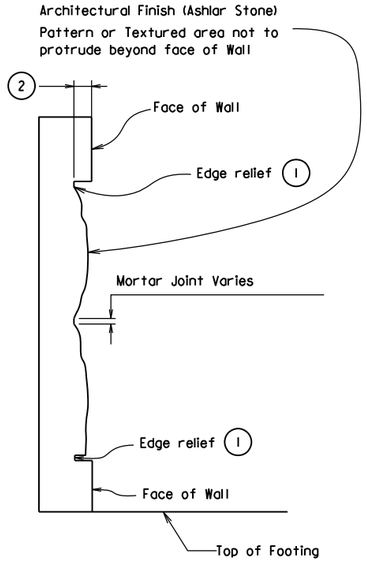

ARCHITECTURAL FINISH DETAILS

N.T.S.

1. Provide edge relief around perimeter of Texture. Edge relief dimensions shall match manufacturers edge distance.
2. Depth of Ashlar Stone pattern approx. 1 5/8". See SP "Architectural Finish".

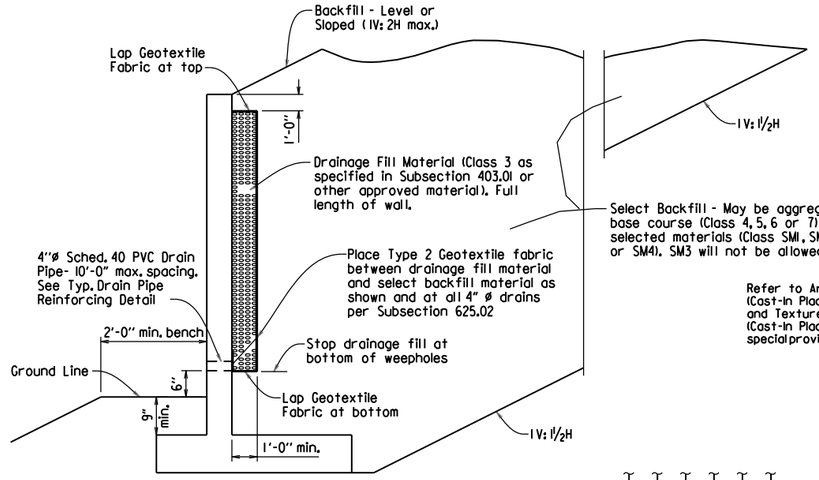

TYPICAL DRAINAGE & BACKFILL DETAILS

N.T.S

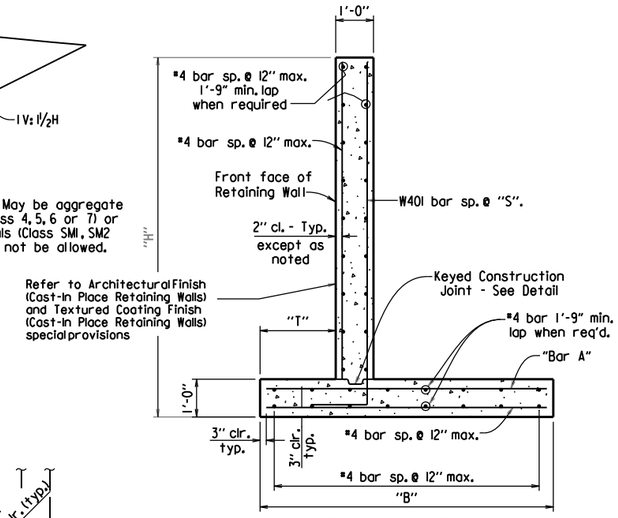

TYPICAL SECTION

N.T.S

GENERAL NOTES

CONSTRUCTION SPECIFICATIONS: Arkansas Department of Transportation Standard Specifications for Highway Construction (Current Edition) with applicable supplemental specifications and special provisions. Unless otherwise noted in the plans, Section and Subsection refer to the Standard Construction Specifications.

DESIGN SPECIFICATIONS: AASHTO LRFD Bridge Design Specifications, Sixth Edition (2012).

LIVE LOAD: Live Load Surcharge is not included in the design of these walls. Vehicular Live Load shall not be allowed within a distance equal to one-half the height of the wall.

CONCRETE: Concrete shall be poured in the dry and all exposed corners to be chamfered ½". All concrete shall be Class S with a minimum 28 day compressive strength f'c = 3,500 psi. A Class 2 Surface finish shall be used on all surfaces of the concrete unless otherwise noted. Refer to Architectural Finish (Cast-in Place Retaining Walls) and Textured Coating Finish (Cast-in Place Retaining Walls) special provisions.

REINFORCING STEEL: All reinforcing steel shall conform to AASHTO M31 or M53, Grade 60.

Foundations for footings shall be prepared in accordance with subsection 801.04. Backfill for retaining walls shall be in accordance with subsection 801.08.

Waterproof Membrane (Type C), waterstops, preformed joints, weep holes & geotextile fabric shall not be paid for directly, but shall be considered subsidiary to Class S Concrete.

Drainage fill material (Class 3) and select backfill shall be measured and paid for as Compacted Embankment.

These details are not intended for use along streams or ditches without consideration for scour.

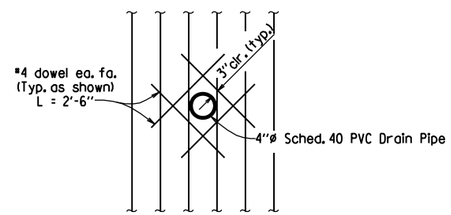

TYPICAL DRAIN PIPE REINFORCING DETAIL

N.T.S

TABLE OF RETAINING WALL VARIABLES (SLOPED BACKFILL) (1V: 2H MAX.)

"H"	"T"	"B"	"S"	"Bar A" Size @ Spacing
3'-0"	9"	2'-6"	12"	#4 @ 12"
4'-0"	9"	3'-6"	12"	#4 @ 12"
5'-0"	9"	4'-6"	12"	#4 @ 12"
6'-0"	9"	5'-6"	12"	#4 @ 6"
7'-0"	9"	6'-6"	12"	#5 @ 6½"
8'-0"	1'-6"	8'-0"	7½"	#6 @ 6"
9'-0"	1'-11"	9'-6"	5"	#8 @ 6"

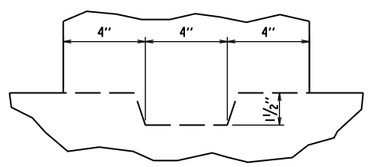

KEYED CONSTRUCTION JOINT DETAIL

N.T.S

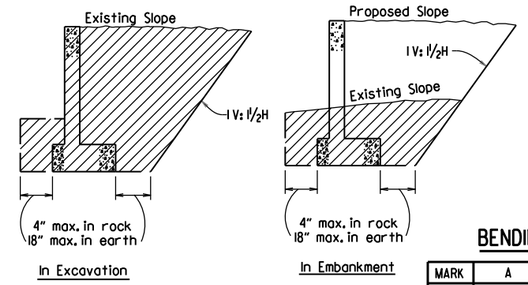

NOTE: Hatched area denotes maximum limits of pay excavation.

DETAILS OF EXCAVATION

N.T.S

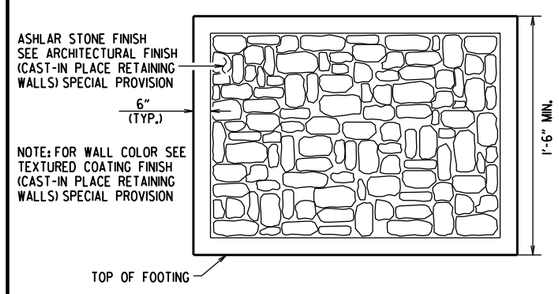

ASHLAR STONE FINISH DETAIL

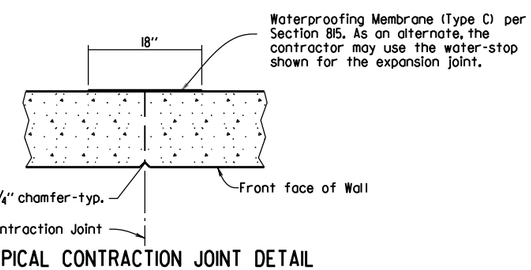

TYPICAL CONTRACTION JOINT DETAIL

N.T.S.

Note: 20'-0" Max. Spacing between Contraction Joints. Horizontal reinforcement shall be continuous through Contraction joints.

BENDING DIAGRAMS

MARK	A	B	P.D.
W401	8"	"H" - 6"	3"
F401	1'-6"	1'-10"	2½"

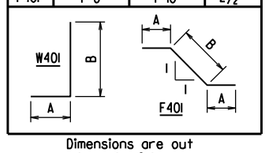

Dimensions are out to out of bars.

TABLE OF RETAINING WALL VARIABLES (LEVEL BACKFILL)

"H"	"T"	"B"	"S"	"Bar A" Size @ Spacing
3'-0"	9"	2'-6"	12"	#4 @ 12"
4'-0"	9"	3'-6"	12"	#4 @ 12"
5'-0"	9"	4'-0"	12"	#4 @ 12"
6'-0"	9"	4'-6"	12"	#4 @ 12"
7'-0"	9"	5'-6"	12"	#4 @ 10"
8'-0"	9"	6'-0"	12"	#5 @ 10"
9'-0"	1'-0"	7'-0"	12"	#5 @ 6½"

NOTES:

Wall pattern shall be applied to the exposed surfaces of wall in accordance with SP "Architectural Finish (Cast-in Place Retaining Walls)" and as shown in the plans. Care shall be taken with form liner handling and installation to ensure aesthetic quality of the wall texturing is maintained. Where form liner panels require modification to conform to the location, dimensions and lines shown in the plans, the Contractor shall provide edge relief matching that of the unaltered form liner. Payment for wall texturing shall be in accordance with SP "Architectural Finish (Cast-in Place Retaining Walls)".

No adjustments will be made in concrete volume due to the use of "Architectural Finish". Class "S" Concrete shall be measured in accordance with Subsection 802.24(a). Care shall be taken in placing concrete to avoid segregation and to eliminate flow lines.

Class 3 Textured Coating Finish shall be applied to wall surfaces as specified in SP "Textured Coating Finish (Cast-in Place Retaining Walls)" and in accordance with Subsection 802.19(b)(3).

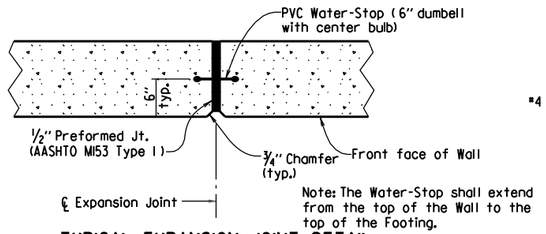

Note: The Water-Stop shall extend from the top of the Wall to the top of the Footing.

TYPICAL EXPANSION JOINT DETAIL

N.T.S.

Note: 60'-0" Max. Spacing between Expansion Joints. Horizontal reinforcing shall stop 2" from ℄ Expansion Joint.

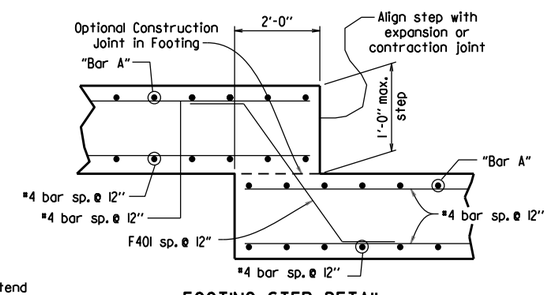

FOOTING STEP DETAIL

N.T.S.

SEISMIC ZONE: These walls have been designed for the following site adjusted peak ground accelerations (A_S):
Level Backfill - $A_S \leq .40g$
Sloped Backfill (1V: 2H max.) - $A_S \leq .30g$

DATE	REVISION	DATE FILMED
5-14-20	ADDED ASHLAR STONE FINISH DETIAL AND NOTES. REVISED TYP. SECTION AND GEN. NOTES.	
5-12-16	REVISED SLOPES FOR SELECT BACKFILL	
2-27-14	REVISED GENERAL NOTES	
7-26-12	DRAWING ISSUED	

ARKANSAS STATE HIGHWAY COMMISSION

REINFORCED CONCRETE RETAINING WALL (WITHOUT LIVE LOAD SURCHARGE)

STANDARD DRAWING SI - 2

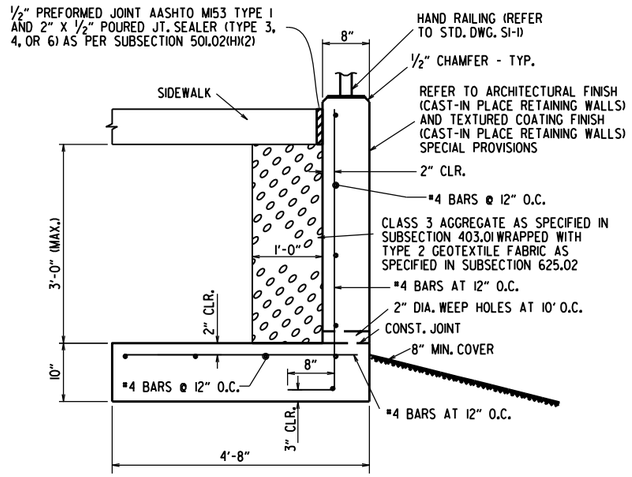

CONCRETE WALK (TYPE SPECIAL) DETAIL MAX HEIGHT 3'-0"

N.T.S.

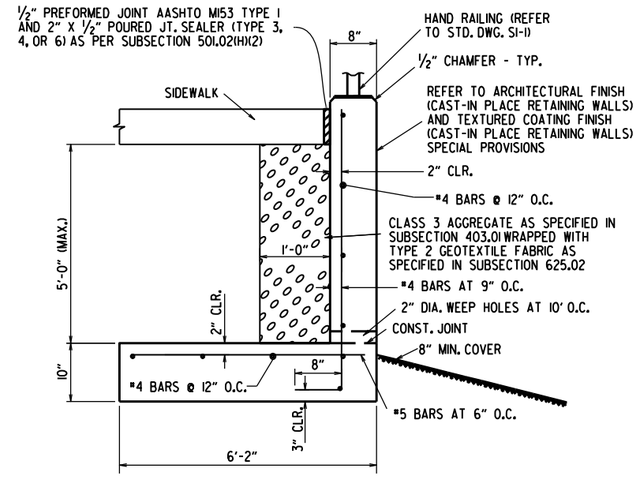

CONCRETE WALK (TYPE SPECIAL) DETAIL MAX HEIGHT 5'-0"

N.T.S.

GENERAL NOTES

CONSTRUCTION SPECIFICATIONS: ARKANSAS DEPARTMENT OF TRANSPORTATION STANDARD SPECIFICATIONS FOR HIGHWAY CONSTRUCTION (CURRENT EDITION) WITH APPLICABLE SUPPLEMENTAL SPECIFICATIONS AND SPECIAL PROVISIONS. UNLESS OTHERWISE NOTED IN THE PLANS, SECTION AND SUBSECTION REFER TO THE STANDARD CONSTRUCTION SPECIFICATIONS.

DESIGN SPECIFICATIONS: AASHTO LRFD BRIDGE DESIGN SPECIFICATIONS, SIXTH EDITION (2012).

LIVE LOAD: LIVE LOAD SURCHARGE IS NOT INCLUDED IN THE DESIGN OF THESE WALLS. VEHICULAR LIVE LOAD SHALL NOT BE ALLOWED WITHIN A DISTANCE EQUAL TO ONE-HALF THE HEIGHT OF THE WALL.

CONCRETE: CONCRETE SHALL BE POURED IN THE DRY AND ALL EXPOSED CORNERS TO BE CHAMFERED ½". ALL CONCRETE SHALL BE CLASS S WITH A MINIMUM 28 DAY COMPRESSIVE STRENGTH F'C = 3,500 PSI. A CLASS 2 SURFACE FINISH SHALL BE USED ON ALL SURFACES OF THE CONCRETE UNLESS OTHERWISE NOTED. REFER TO ARCHITECTURAL FINISH (CAST-IN PLACE RETAINING WALLS) AND TEXTURED COATING FINISH (CAST-IN PLACE RETAINING WALLS) SPECIAL PROVISIONS.

REINFORCING STEEL: ALL REINFORCING STEEL SHALL CONFORM TO AASHTO M31 OR M53, GRADE 60.

FOUNDATIONS FOR FOOTINGS SHALL BE PREPARED IN ACCORDANCE WITH SUBSECTION 801.04. BACKFILL FOR RETAINING WALLS SHALL BE IN ACCORDANCE WITH SUBSECTION 801.08.

WATERPROOF MEMBRANE (TYPE C), WATERSTOPS, PREFORMED JOINTS, PREFORMED JOINT FILLER, WEEP HOLES, CLASS 3 AGGREGATE, REINF. STEEL, CONCRETE, & GEOTEXTILE FABRIC SHALL NOT BE PAID FOR DIRECTLY, BUT SHALL BE CONSIDERED SUBSIDIARY TO CONCRETE WALKS (TYPE SPECIAL).

JOINTS IN THE WALL SHALL MATCH TYPE AND SPACING OF THE JOINTS IN THE WALK.

THESE DETAILS ARE NOT INTENDED FOR USE ALONG STREAMS OR DITCHES WITHOUT CONSIDERATION FOR SCOUR.

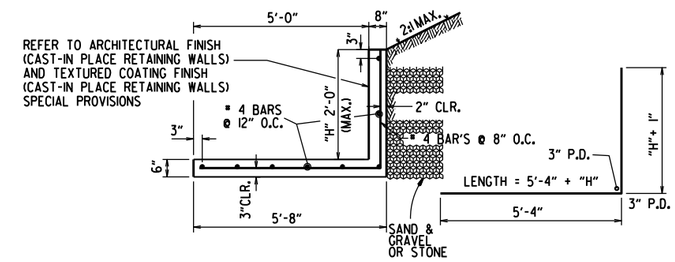

CONCRETE WALK (TYPE SPECIAL) DETAILS MAX HEIGHT 2'-0"

N.T.S.

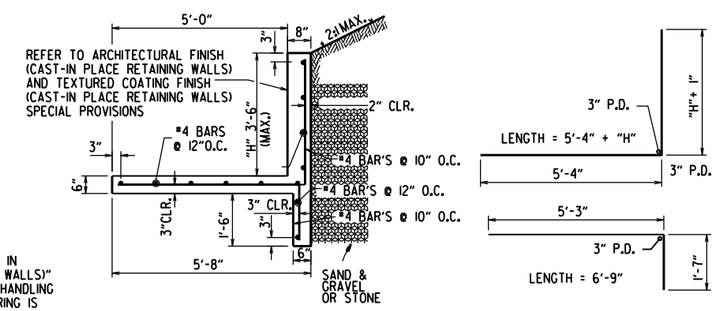

CONCRETE WALK (TYPE SPECIAL) DETAILS MAX HEIGHT 3'-6"

N.T.S.

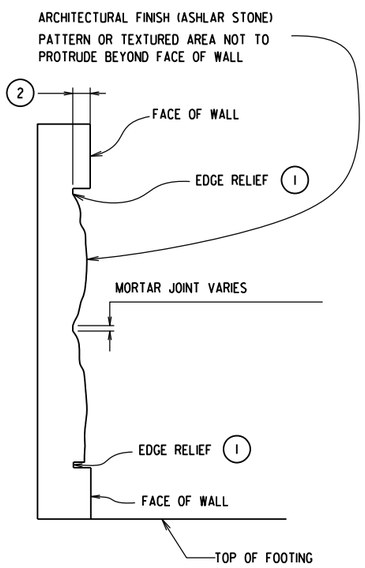

ARCHITECTURAL FINISH DETAILS

N.T.S.

1 PROVIDE EDGE RELIEF AROUND PERIMETER OF TEXTURE. EDGE RELIEF DIMENSIONS SHALL MATCH MANUFACTURERS EDGE DISTANCE.

2 DEPTH OF ASHLAR STONE PATTERN APPROX. 1⅝". SEE SP "ARCHITECTURAL FINISH (CAST-IN PLACE RETAINING WALLS)".

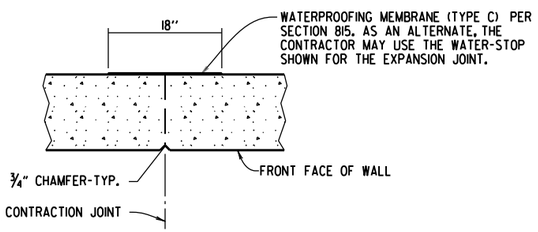

TYPICAL CONTRACTION JOINT DETAIL

N.T.S.

NOTE: 20'-0" MAX. SPACING BETWEEN CONTRACTION JOINTS. HORIZONTAL REINFORCEMENT SHALL BE CONTINUOUS THROUGH CONTRACTION JOINTS.

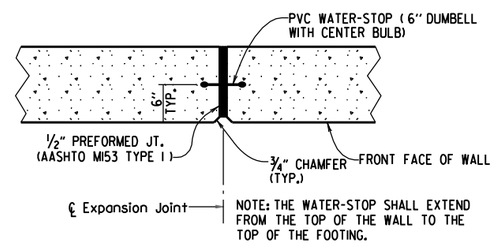

TYPICAL EXPANSION JOINT DETAIL

N.T.S.

NOTE: 60'-0" MAX. SPACING BETWEEN EXPANSION JOINTS. HORIZONTAL REINFORCING SHALL STOP 2" FROM ℄ EXPANSION JOINT.

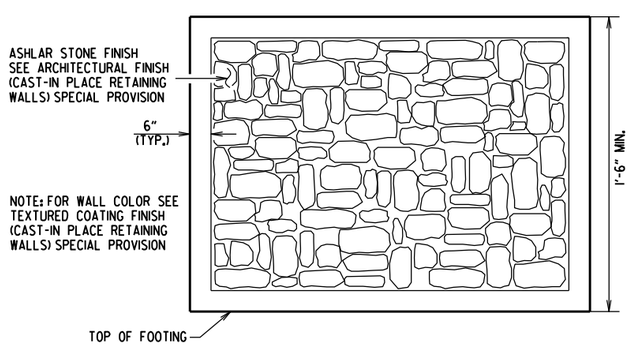

ASHLAR STONE FINISH DETAIL

NOTES:

WALL PATTERN SHALL BE APPLIED TO THE EXPOSED SURFACES OF WALL IN ACCORDANCE WITH SP "ARCHITECTURAL FINISH (CAST-IN PLACE RETAINING WALLS)" AND AS SHOWN IN THE PLANS. CARE SHALL BE TAKEN WITH FORM LINER HANDLING AND INSTALLATION TO ENSURE AESTHETIC QUALITY OF THE WALL TEXTURING IS MAINTAINED. WHERE FORM LINER PANELS REQUIRE MODIFICATION TO CONFORM TO THE LOCATION, DIMENSIONS AND LINES SHOWN IN THE PLANS, THE CONTRACTOR SHALL PROVIDE EDGE RELIEF MATCHING THAT OF THE UNALTERED FORM LINER. PAYMENT FOR WALL TEXTURING SHALL BE IN ACCORDANCE WITH SP "ARCHITECTURAL FINISH (CAST-IN PLACE RETAINING WALLS)".

NO ADJUSTMENTS WILL BE MADE IN CONCRETE VOLUME DUE TO THE USE OF "ARCHITECTURAL FINISH". CLASS "S" CONCRETE SHALL BE MEASURED IN ACCORDANCE WITH SUBSECTION 802.24(A). CARE SHALL BE TAKEN IN PLACING CONCRETE TO AVOID SEGREGATION AND TO ELIMINATE FLOW LINES.

CLASS 3 TEXTURED COATING FINISH SHALL BE APPLIED TO WALL SURFACES AS SPECIFIED IN SP "TEXTURED COATING FINISH (CAST-IN PLACE RETAINING WALLS)" AND IN ACCORDANCE WITH SUBSECTION 802.19(B)(3).

DATE	REVISION	DATE FILMED
11-05-20	REVISED GENERAL NOTES	
5-14-20	DRAWING ISSUED	

ARKANSAS STATE HIGHWAY COMMISSION

CONCRETE WALK (TYPE SPECIAL)

STANDARD DRAWING SI - 3

R1-1

STANDARD 30"X30"
EXPRESSWAY 36"X36"
SPECIAL 48"X48"

R1-2

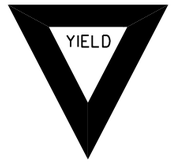

STD. 36"X36"X36"
EXPWY. 48"X48"X48"
FWY. 60"X60"X60"

R2-1

STD. 24"X30"
EXPWY. 36"X48"
FWY. 48"X60"

W3-5

STD. 36"X36"
EXPWY. 48"X48"
FWY. 48"X48"

W3-5a

STD. 36"X36"
EXPWY. 48"X48"
FWY. 48"X48"

R4-1

STD. 24"X30"
EXPWY. 36"X48"
FWY. 48"X60"

R4-2

STD. 24"X30"
EXPWY. 36"X48"
FWY. 48"X60"

R5-1

STD. 30"X30"
EXPWY. 36"X36"
SPECIAL 48"X48"

R11-2

48"X30"

R11-3A

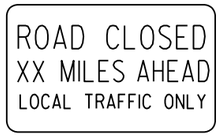

60"X30"

R11-4

60"X30"

W21-5a

STD. 36"X36"
FWY. 48"X48"

W1-1

STD. 36"X36"
FWY. 48"X48"

W1-2

STD. 36"X36"
FWY. 48"X48"

W1-3

STD. 48"X48"

W1-4

STD. 48"X48"

W1-6

STD. 48"X24"
SPECIAL 60"X30"

W1-8

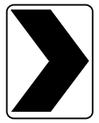

STD. 18"X24"
SPECIAL 24"X30"
EXPWY. 30"X36"
FWY. 36"X48"

W3-1

STD. 36"X36"
SPECIAL 48"X48"

W3-2

STD. 36"X36"
SPECIAL 48"X48"

W4-2

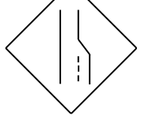

STD. 36"X36"
FWY. 48"X48"

W5-1

STD. 36"X36"
SPECIAL 48"X48"

W6-3

EXPWY. 36"X36"
SPECIAL 48"X48"

W8-7

EXPWY. 36"X36"
FWY. 48"X48"

W9-2

STD. 36"X36"
FWY. 48"X48"

W13-1

STD. 24"X24"

W20-1

STD. 48"X48"

W20-2

STD. 48"X48"

W20-3

STD. 48"X48"

W20-4

STD. 48"X48"

W20-5

STD. 48"X48"

W20-7a

STD. 36"X36"
FWY. 48"X48"

W21-2

STD. 30"X30"
SPECIAL 36"X36"

W21-5

STD. 30"X30"
SPECIAL 36"X36"

W24-1

STD. 36"X36"

W1-4b

STD. 48"X48"

R56-1

STD. 18"X18"

W8-11

STD. 36"X36"
FWY. 48"X48"

W8-9

STD. 36"X36"
FWY. 48"X48"

G20-1

60"X24"

G20-2

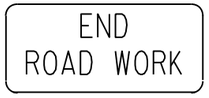

48"X24"

OM-3L OM-3R

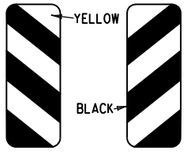

12"X36"

M4-9

STD. 30"X24"
SPECIAL 48"X36"
SPECIAL 60"X48"

M4-10

48"X18"

R55-1

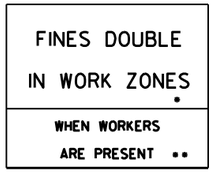

36"X60"

• USE 6" C LETTERS
•• USE 4" D LETTERS

ADVANCE DISTANCES
(XXXX)

500 FT	½ MILE
1000 FT	¾ MILE
1500 FT	1 MILE
	AHEAD

GENERAL NOTES:

1. ALL TRAFFIC CONTROL DEVICES USED ON ROAD CONSTRUCTION SHALL CONFORM TO THE MANUAL ON UNIFORM TRAFFIC CONTROL DEVICES, LATEST EDITION, AND TO THE STANDARD HIGHWAY SIGNS, LATEST EDITION, OR AS APPROVED BY THE FEDERAL HIGHWAY ADMINISTRATION.

2. TRAFFIC CONTROL DEVICES SHALL BE SET UP JUST BEFORE THE START OF CONSTRUCTION OPERATIONS AND SHALL BE PROPERLY MAINTAINED DURING THE TIME SUCH CONDITIONS EXIST. THEY SHALL REMAIN IN PLACE ONLY AS LONG AS NEEDED AND REMOVED THEREAFTER.

3. EXISTING SIGNS AND CONSTRUCTION SIGNS SHALL BE KEPT IN PROPER POSITION, AND BE CLEAN AND LEGIBLE AT ALL TIMES. SIGNS THAT DO NOT APPLY TO EXISTING CONDITIONS SHALL BE REMOVED. SIGNS THAT ARE DAMAGED, DEFACED, OR THAT ACCUMULATE DIRT DURING CONSTRUCTION SHALL BE CLEANED, REPAIRED, OR REPLACED.

• 4. SIGNS ARE USUALLY MOUNTED ON A SINGLE POST, ALTHOUGH THOSE WIDER THAN 36" OR LARGER THAN 10 SQ. FT. SHALL BE MOUNTED ON TWO POSTS OR ABOVE A TYPE III BARRICADE.

• 5. SIGN POSTS DIRECT BURIED IN SOIL SHALL BE 2 LB. MINIMUM CHANNEL POST OR 4"x4" WOOD POSTS. CHANNEL POSTS SHALL BE PAINTED GREEN. WOOD POSTS SHALL BE PAINTED WHITE. ALL POSTS SHALL BE NEATLY CONSTRUCTED, AND SHALL BE REPLUMBED, CLEANED, OR REPAIRED AS NEEDED FOR THE DURATION OF THE JOB. THERE SHALL NOT BE MORE THAN 2 POSTS IN A 7' PATH FOR WOOD OR CHANNEL POSTS. ANY CHANNEL POST SPLICE SHALL BE IN ACCORDANCE WITH STANDARD DRAWING TC-3.

6. POST MOUNTED SIGNS IN RURAL AREAS SHALL BE CONSTRUCTED WITH THE NEAR EDGE OF THE SIGN FROM 6 TO 12 FEET FROM THE PAVEMENT EDGE. SIGNS IN URBAN AREAS AND BARRICADE MOUNTED SIGNS SHALL BE MOUNTED A MINIMUM OF 2 FEET FROM THE PAVEMENT EDGE.

7. ALL POST AND BARRICADE MOUNTED SIGNS MOUNTED IN URBAN AREAS SHALL BE MOUNTED A MINIMUM DISTANCE OF 7' FROM THE BOTTOM OF THE SIGN TO THE ROADWAY SURFACE. ALL POST AND BARRICADE MOUNTED SIGNS MOUNTED IN RURAL AREAS SHALL BE MOUNTED A MINIMUM DISTANCE OF 7' FROM THE BOTTOM OF THE SIGN TO THE ROADWAY SURFACE, EXCEPT A MINIMUM OF 6' SHALL BE USED WHEN MOUNTING AN ADVISORY SIGN BELOW A WARNING SIGN. TEMPORARY SIGNS MAY BE MOUNTED ON PORTABLE SUPPORTS FOR INTERMEDIATE TERM STATIONARY WORK CONDITIONS. THE SIGNS MINIMUM MOUNTING HEIGHT SHALL BE 5'. RETROREFLECTIVE DEVICES SHALL BE USED. TEMPORARY SIGNS MAY BE MOUNTED ON PORTABLE SUPPORTS FOR SHORT-TERM, SHORT DURATION, AND MOBILE CONDITIONS. THEY SHALL BE NO LESS THAN ONE (1) FOOT ABOVE THE TRAVELED WAY. LONG-TERM STATIONARY SIGNS SHALL BE DIRECT BURIED IN SOIL, UNLESS CONDITIONS NECESSITATE THE USE OF PORTABLE SIGNS, OR AS APPROVED BY THE ENGINEER. CONCRETE PADS, CONCRETE OR ROCK BALLAST, OR OTHER SOLID MATERIALS SHALL NOT BE UTILIZED WITH PORTABLE SIGN SUPPORTS.

8. FLAGGERS SHALL USE REFLECTORIZED STOP-SLOW PADDLES. FLAGS MAY BE USED ONLY FOR EMERGENCY SITUATIONS.

9. MOST OF THE SIGNS SHOWN ARE ORIENTED TO THE RIGHT. HOWEVER, THIS DOES NOT PRECLUDE THE USE OF MIRROR IMAGES OF THESE SIGNS WHERE THE REVERSE ORIENTATION MIGHT BETTER CONVEY TO MOTORISTS THE PROPER DIRECTION OF MOVEMENT.

10. R55-1 SIGNS SHALL BE PLACED AT LEAST 1500' BUT NOT MORE THAN 1 MILE IN ADVANCE OF THE WORK ZONE. IF A SPEED LIMIT REDUCTION IS IN EFFECT, THE SIGN SHALL BE PLACED A MINIMUM OF 500' IN ADVANCE OF THE "REDUCED SPEED AHEAD" SIGN.

• NOTE: SUPPORTS FOR SIGNS, BARRICADES, AND VERTICAL PANELS THAT ARE DIFFERENT FROM THE REQUIREMENTS SHOWN IN NOTES 4 & 5, BUT MEET THE REQUIREMENTS OF MANUAL FOR ASSESSING SAFETY HARDWARE (MASH), WILL BE ACCEPTED. COMPLIANCE WITH THE REQUIREMENTS OF MANUAL FOR ASSESSING SAFETY HARDWARE (MASH) IS REQUIRED FOR ALL PROJECTS.

DATE	REVISION	FILMED
11-07-19	REVISED FOR MASH	
4-13-17	DELETED RSP-1 & ADDED W21-5a	
9-2-15	REVISED REDUCED SPEED LIMIT AHEAD SIGNS REVISED ROAD WORK NEXT XX MILES	
12-15-11	REVISED W24-1	
11-17-10	DELETED W8-9a & ADDED W8-9	
10-15-09	ADDED REFERENCE TO MASH & ADDED SIGN W24-1	
4-17-08	REVISED SIGN DESIGNATIONS	
11-18-04	REVISED NOTES	
10-9-03	REVISED NOTE 1	
11-16-01	REVISED NOTE 7	
9-28-00	REVISED NOTE	
11-18-98	ADDED NOTE	
6-26-97	REVISED NOTE 5	
4-03-97	REVISED NOTE 5	
10-18-96	ADDED CONTROLLED ACCESS HWY. SIGN & TO NOTE 7	
10-12-95	ADDED R55-1	
6-8-95	REVISED TO CORRECT SIGN ILLUSTRATIONS	6-8-95
2-2-95	REVISED PER PART VI, MUTCD SEPT. 3, 1993	
8-15-91	DRAWN AND PLACED IN USE	

ARKANSAS STATE HIGHWAY COMMISSION

STANDARD TRAFFIC CONTROLS FOR HIGHWAY CONSTRUCTION

STANDARD DRAWING TC-1

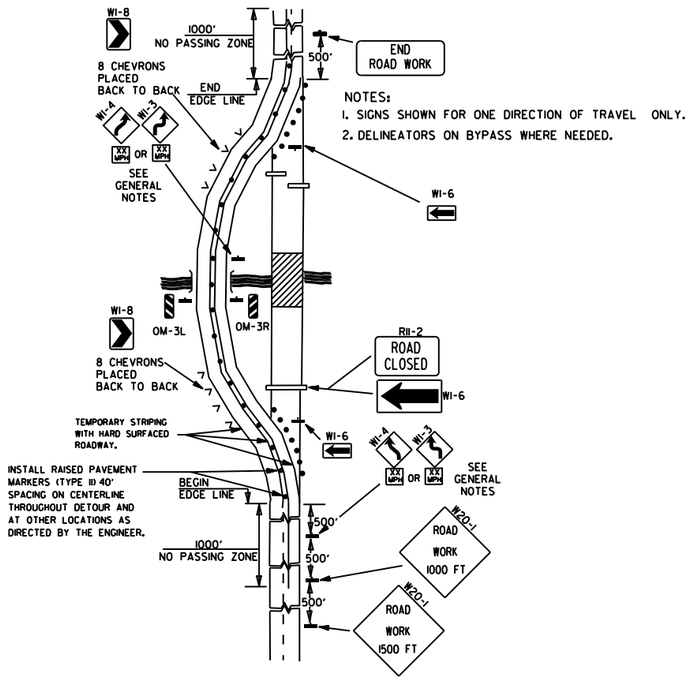

NOTES:
1. SIGNS SHOWN FOR ONE DIRECTION OF TRAVEL ONLY.
2. DELINEATORS ON BYPASS WHERE NEEDED.

(A) TYPICAL APPLICATION OF TRAFFIC CONTROL DEVICES ON A 2-LANE HIGHWAY WHERE THE ENTIRE ROADWAY IS CLOSED AND A BYPASS DETOUR IS PROVIDED.

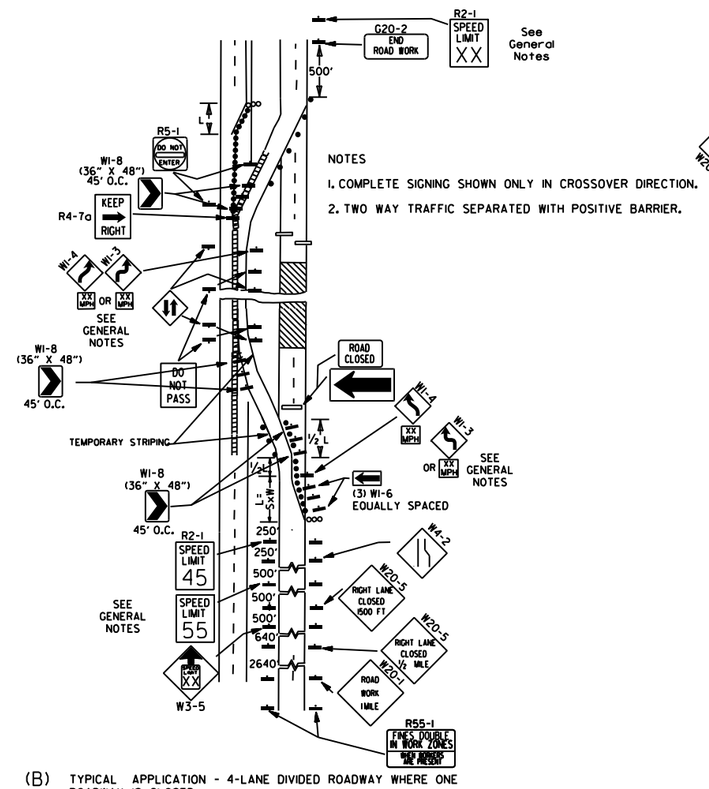

NOTES
1. COMPLETE SIGNING SHOWN ONLY IN CROSSOVER DIRECTION.
2. TWO WAY TRAFFIC SEPARATED WITH POSITIVE BARRIER.

(B) TYPICAL APPLICATION - 4-LANE DIVIDED ROADWAY WHERE ONE ROADWAY IS CLOSED.

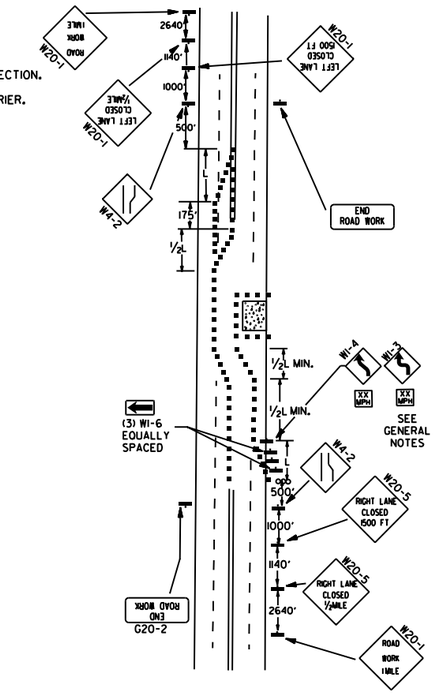

(C) TYPICAL APPLICATION - 4-LANE UNDIVIDED ROADWAY WHERE HALF OF THE ROADWAY IS CLOSED.

KEY:
- FLAGGER
- POSITIVE BARRIER
- ARROW PANEL (IF REQUIRED)
- TYPE III BARRICADE
- CHANNELIZING DEVICE
- TRAFFIC DRUM
- RAISED PAVEMENT MARKER

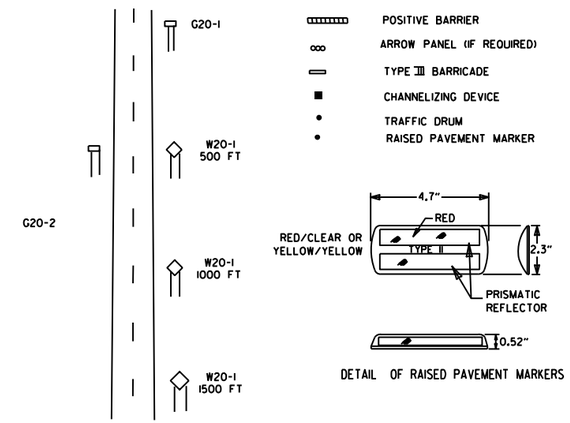

TYPICAL ADVANCE WARNING SIGN PLACEMENT

TAPER FORMULAE:

L=SXW FOR SPEEDS OF 45MPH OR MORE.

$L = \frac{WS^2}{60}$ FOR SPEEDS OF 40MPH OR LESS.

WHERE:

L= MINIMUM LENGTH OF TAPER.

S= NUMERICAL VALUE OF POSTED SPEED LIMIT PRIOR TO WORK OR 85TH PERCENTILE SPEED.

W= WIDTH OF OFFSET.

GENERAL NOTES:

1. THE MAINTENANCE DIVISION SHALL CONDUCT A BALL BANK STUDY TO DETERMINE THE ADVISORY SPEED LIMIT PRIOR TO OPENING TO TRAFFIC. THE ADVISORY SPEED WILL BE POSTED ON W1-3 OR W1-4 CURVE WARNING SIGNS. USE W1-4 WHEN SPEED IS GREATER THAN 30MPH AND W1-3 WHEN 30MPH OR LESS
2. WHEN THE EXISTING SPEED LIMIT IS 55MPH AND THE PLANS REQUIRE A SPEED LIMIT OF 45MPH, THE R2-1(55) SHALL BE OMITTED AND THE W3-5 SHALL BE INSTALLED AT THAT LOCATION. ADDITIONAL R2-1 45MPH SPEED LIMIT SIGNS SHALL BE INSTALLED AT A MAXIMUM OF 1MILE INTERVALS. AT THE END OF THE WORK AREA A R2-1(XX) SHALL BE INSTALLED TO MATCH ORIGINAL SPEED LIMIT.
3. WHEN THE EXISTING SPEED LIMIT IS 65MPH AND THE PLANS REQUIRE A SPEED LIMIT OF 55MPH, THE R2-1(45) SHALL BE OMITTED. ADDITIONAL R2-1 55MPH SPEED LIMIT SIGNS SHALL BE INSTALLED AT A MAXIMUM OF 1MILE INTERVALS. AT THE END OF THE WORK AREA A R2-1(XX) SHALL BE INSTALLED TO MATCH ORIGINAL SPEED LIMIT.
4. THE MAXIMUM SPACING BETWEEN CHANNELIZING DEVICES IN A TAPER SHOULD BE APPROXIMATELY EQUAL IN FEET TO THE SPEED LIMIT. BEYOND THE TAPER, MAXIMUM SPACING SHALL BE TWO TIMES THE SPEED LIMIT, OR AS DIRECTED BY THE ENGINEER.
5. WARNING LIGHTS AND/OR FLAGS MAY BE MOUNTED TO SIGNS OR CHANNELIZING DEVICES AT NIGHT AS NEEDED.
6. PAVEMENT MARKINGS NO LONGER APPLICABLE WHICH MIGHT CREATE CONFUSION IN THE MINDS OF VEHICLE OPERATORS SHALL BE REMOVED OR OBLITERATED AS SOON AS PRACTICABLE.
7. TRAILER MOUNTED DEVICES SUCH AS ARROW PANELS AND PORTABLE CHANGEABLE MESSAGE SIGNS SHALL BE DELINEATED BY AFFIXING CONSPICUITY MATERIAL IN A CONTINUOUS LINE ON THE FACE OF THE TRAILER. WHEN PLACED ON OR ADJACENT TO THE SHOULDER AND NOT BEHIND A POSITIVE BARRIER, THESE DEVICES SHALL BE DELINEATED BY PLACING FIVE (5) TRAFFIC DRUMS, EQUALLY SPACED ALONG THE TRAFFIC SIDE OF THE DEVICE. PAYMENT FOR TRAFFIC DRUMS SHALL BE CONSIDERED INCLUDED IN THE PRICE BID FOR VARIOUS TRAILER MOUNTED DEVICES.
8. DIMENSIONS SHOWN FOR RAISED PAVEMENT MARKERS ARE TYPICAL. THE CONTRACTOR MAY SUBSTITUTE SIMILAR MARKERS WITH THE APPROVAL OF THE ENGINEER. REQUESTING APPROVAL FOR SIMILAR MARKERS MAY BE MADE BY REFERRING TO THE ARDOT QUALIFIED PRODUCTS LIST.
9. ALL TRAILER MOUNTED DEVICES SUCH AS ARROW PANELS AND PORTABLE CHANGEABLE MESSAGE SIGNS SHALL MEET THE REQUIREMENTS OF THE MANUAL FOR ASSESSING SAFETY HARDWARE (MASH).

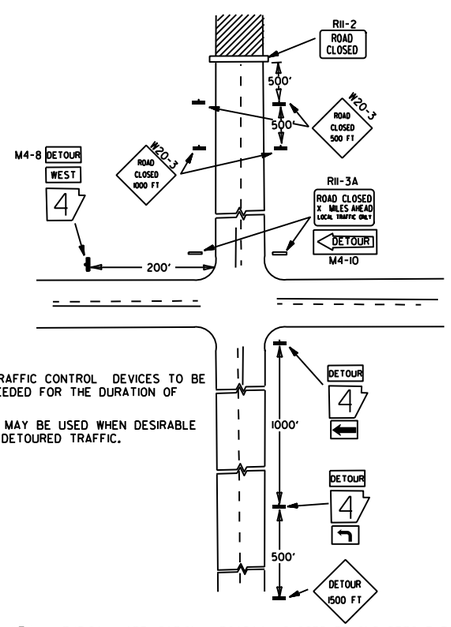

NOTES:
1. REGULATORY TRAFFIC CONTROL DEVICES TO BE MODIFIED AS NEEDED FOR THE DURATION OF THE DETOUR.
2. STREET NAMES MAY BE USED WHEN DESIRABLE FOR DIRECTING DETOURED TRAFFIC.

(D) TYPICAL APPLICATION - ROADWAY CLOSED BEYOND DETOUR POINT.

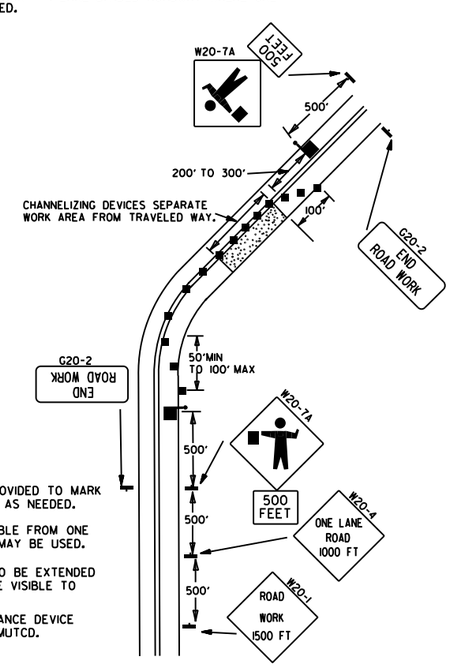

NOTES:
1. FLOOD LIGHTS SHOULD BE PROVIDED TO MARK FLAGGER STATIONS AT NIGHT AS NEEDED.
2. IF ENTIRE WORK AREA IS VISIBLE FROM ONE STATION, A SINGLE FLAGGER MAY BE USED.
3. CHANNELIZING DEVICES ARE TO BE EXTENDED TO A POINT WHERE THEY ARE VISIBLE TO APPROACHING TRAFFIC.
4. AUTOMATED FLAGGER ASSISTANCE DEVICE (AFAD) OPTIONAL. REFER TO MUTCD.

(E) TYPICAL APPLICATION OF TRAFFIC CONTROL DEVICES ON 2-LANE HIGHWAY WHERE ONE LANE IS CLOSED AND FLAGGING IS PROVIDED.

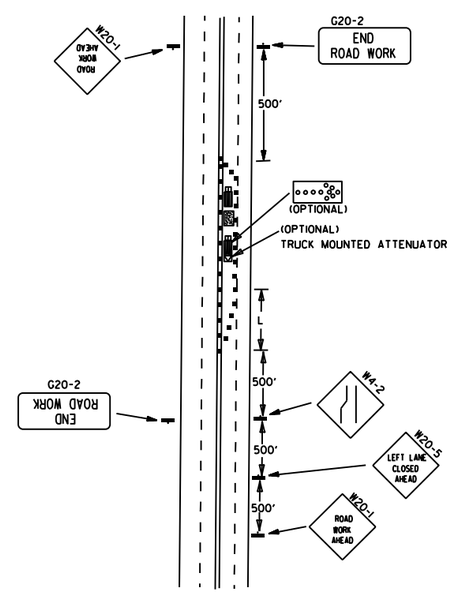

(F) TYPICAL APPLICATION - 4-LANE UNDIVIDED ROADWAY WITH INSIDE LANE CLOSED.

DATE	REVISION	FILMED
05-20-21	REVISED NOTE 7	
11-07-19	REVISED NOTE 1, ADDED NOTE 9	
9-2-15	REVISED NOTE 2, ADDED NOTE 8, REVISED DRAWING (A) & REPLACED R2-5A WITH W3-5	
9-12-13	REVISED DETAIL OF RAISED PAVEMENT MARKERS	
3-11-10	ADDED (AFAD)	
11-20-08	REVISED SIGN DESIGNATIONS	
11-18-04	ADDED GENERAL NOTE	
10-18-96	ADDED R55-1	
4-26-96	CORRECTED (c) BEHIND G20-2	
6-8-95	CORRECTED SIGN IDENT. ON W1-4A	6-8-95
2-2-95	REVISED PER PART VI, MUTCD, SEPT. 3, 1993	
8-15-91	DRAWN AND PLACED IN USE	

ARKANSAS STATE HIGHWAY COMMISSION

STANDARD TRAFFIC CONTROLS FOR HIGHWAY CONSTRUCTION

STANDARD DRAWING TC-2

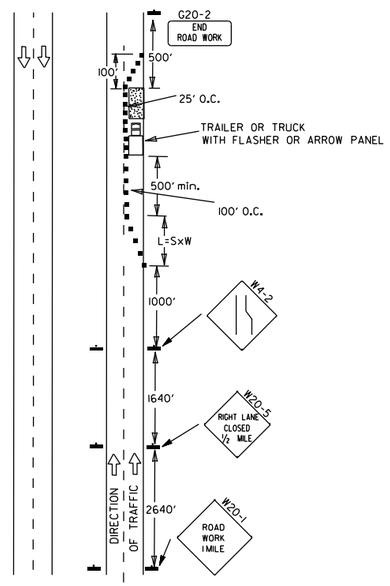

(A) TYPICAL APPLICATION - DAYTIME MAINTENANCE OPERATIONS OF SHORT DURATION ON A 4-LANE DIVIDED ROADWAY WHERE HALF OF THE ROADWAY IS CLOSED.

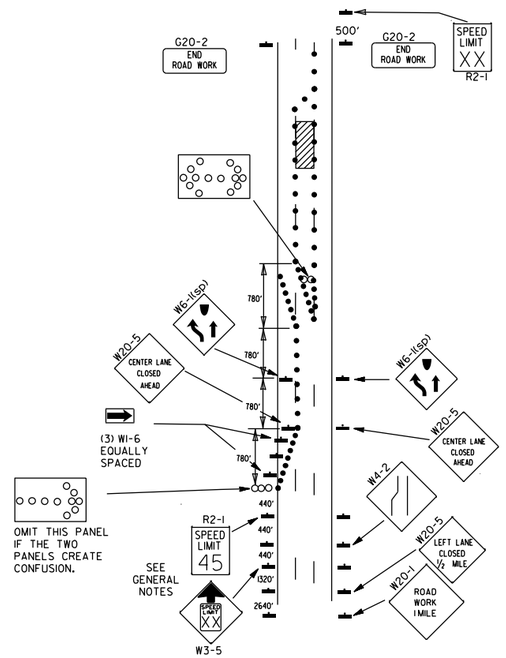

(B) TYPICAL APPLICATION - 3-LANE ONEWAY ROADWAY WHERE CENTER LANE IS CLOSED.

KEY:

- ARROW PANEL (IF REQUIRED)
- ■ CHANNELIZING DEVICE
- ● TRAFFIC DRUM

GENERAL NOTES:

1. A SPEED LIMIT REDUCTION MAY BE IMPLEMENTED ONLY WHEN DESIGNATED IN THE PLAN OR WHEN RECOMMENDED BY THE ROADWAY DESIGN DIVISION.
2. WHEN THE EXISTING SPEED LIMIT IS 55MPH AND THE PLANS REQUIRE A SPEED LIMIT OF 45MPH, THE R2-1(55) SHALL BE OMITTED AND THE W3-5 SHALL BE INSTALLED AT THAT LOCATION. ADDITIONAL R2-1 45MPH SPEED LIMIT SIGNS SHALL BE INSTALLED AT A MAXIMUM OF 1MILE INTERVALS. AT THE END OF THE WORK AREA A R2-1(XX) SHALL BE INSTALLED TO MATCH ORIGINAL SPEED LIMIT.
3. WHEN THE EXISTING SPEED LIMIT IS 65MPH AND THE PLANS REQUIRE A SPEED LIMIT OF 55MPH, THE R2-1(45) SHALL BE OMITTED. ADDITIONAL R2-1 55MPH SPEED LIMIT SIGNS SHALL BE INSTALLED AT A MAXIMUM OF 1MILE INTERVALS. AT THE END OF THE WORK AREA A R2-1(XX) SHALL BE INSTALLED TO MATCH ORIGINAL SPEED LIMIT.
4. THE MAXIMUM SPACING BETWEEN CHANNELIZING DEVICES IN A TAPER SHOULD BE APPROXIMATELY EQUAL IN FEET TO THE SPEED LIMIT. BEYOND THE TAPER, MAXIMUM SPACING SHALL BE TWO TIMES THE SPEED LIMIT OR AS DIRECTED BY THE ENGINEER.
5. WARNING LIGHTS AND/OR FLAGS MAY BE MOUNTED TO SIGNS OR CHANNELIZING DEVICES AT NIGHT AS NEEDED.
6. PAVEMENT MARKINGS NO LONGER APPLICABLE WHICH MIGHT CREATE CONFUSION IN THE MINDS OF VEHICLE OPERATORS SHALL BE REMOVED OR OBLITERATED AS SOON AS PRACTICABLE.
7. THE G20-1 SIGN WILL BE REQUIRED ON JOBS OF OVER TWO MILES IN LENGTH. WHEN THE LANE CLOSURE IS NOT AT THE BEGINNING OF THE PROJECT, THE G20-1 SIGN SHALL BE ERECTED 125' IN ADVANCE OF THE JOB LIMIT. ADDITIONAL W20-1 (1 MILE) SIGNS ARE NOT REQUIRED IN ADVANCE OF LANE CLOSURES THAT BEGIN INSIDE THE PROJECT LIMITS.
8. FLAGGERS SHALL USE STOP/SLOW PADDLES FOR CONTROLLING TRAFFIC THROUGH WORK ZONES. FLAGS MAY BE USED ONLY FOR EMERGENCY SITUATIONS.
9. ALL PLASTIC DRUMS AND CONES SHALL MEET THE REQUIREMENTS OF MANUAL FOR ASSESSING SAFETY HARDWARE (MASH).
10. TRAILER MOUNTED DEVICES SUCH AS ARROW PANELS AND PORTABLE CHANGEABLE MESSAGE SIGNS SHALL BE DELINEATED BY AFFIXING CONSPICUITY MATERIAL IN A CONTINUOUS LINE ON THE FACE OF THE TRAILER. WHEN PLACED ON OR ADJACENT TO THE SHOULDER AND NOT BEHIND A POSITIVE BARRIER, THESE DEVICES SHALL BE DELINEATED BY PLACING FIVE (5) TRAFFIC DRUMS, EQUALLY SPACED ALONG THE TRAFFIC SIDE OF THE DEVICE. PAYMENT FOR TRAFFIC DRUMS SHALL BE CONSIDERED INCLUDED IN THE PRICE BID FOR VARIOUS TRAILER MOUNTED DEVICES.
11. ALL TRAILER MOUNTED DEVICES SUCH AS ARROW PANELS AND PORTABLE CHANGEABLE MESSAGE SIGNS SHALL MEET THE REQUIREMENTS OF THE MANUAL FOR ASSESSING SAFETY HARDWARE (MASH).

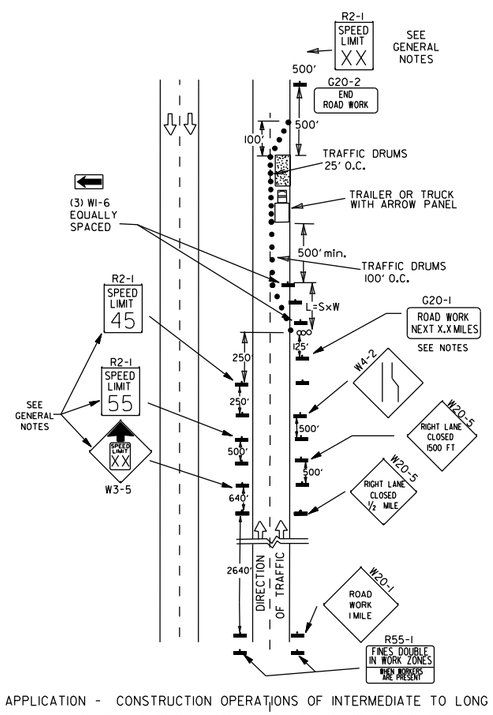

(C) TYPICAL APPLICATION - CONSTRUCTION OPERATIONS OF INTERMEDIATE TO LONG TERM DURATION ON A 4-LANE DIVIDED ROADWAY WHERE HALF OF THE ROADWAY IS CLOSED.

CHANNELIZING DEVICES

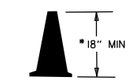

* WHEN CONES ARE USED ON FREEWAYS AND MULTI-LANE HIGHWAYS, THEY SHALL BE 28" MIN. DURING HOURS OF DARKNESS, 28" CONES SHALL BE USED ON ALL ROADWAYS, AND SHALL BE REFLECTORIZED IN ACCORDANCE WITH THE M.U.T.C.D.

CONES

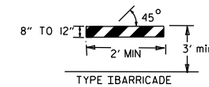

TYPE I BARRICADE

PLASTIC DRUM

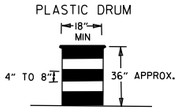

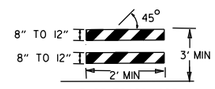

TYPE II BARRICADE

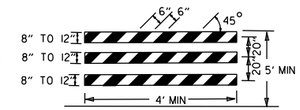

TYPE III BARRICADE

NOTE:
FOR ALL ROAD CLOSURES, THE TYPE III BARRICADES SHALL BE OF SUFFICIENT LENGTH TO EXTEND ACROSS ENTIRE ROADWAY.

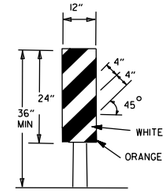

VERTICAL PANEL
VP-1R

VERTICAL PANEL PLACEMENT

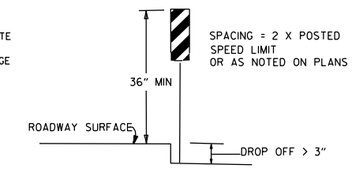

FLAG

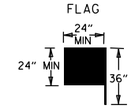

FLAG SHALL BE OF GOOD GRADE RED MATERIAL

TRAFFIC CONTROL DEVICES

NON-INTERSTATE			
VERTICAL DIFFERENTIAL	LOCATION	TRAFFIC CONTROL	
		≤ 45 MPH	> 45 MPH
≤ 1"	CENTERLINE	W8-11	W8-11
> 1" ≤ 3"	CENTERLINE	W8-11 AND CENTERLINE LANE STRIPING	W8-11 AND CENTERLINE LANE STRIPING
> 3"	CENTERLINE	STANDARD LANE CLOSURE(6)	STANDARD LANE CLOSURE(6)
≤ 3"	EDGE OF TRAVELED LANE OR EDGE OF SHOULDER	W8-9 AND TRAFFIC DRUMS(1)	W8-9 AND TRAFFIC DRUMS(1)
> 3" ≤ 6"	EDGE OF TRAVELED LANE OR EDGE OF SHOULDER	W8-17, EDGE LINE STRIPING, AND TRAFFIC DRUMS(1)	W8-17, EDGE LINE STRIPING, AND TRAFFIC DRUMS(1)
> 6" ≤ 18"	EDGE OF TRAVELED LANE OR EDGE OF SHOULDER	W8-17, EDGE LINE STRIPING, AND TRAFFIC DRUMS(1)	W8-17, EDGE LINE STRIPING, AND TRAFFIC DRUMS(2)
> 18" ≤ 24"	EDGE OF TRAVELED LANE OR EDGE OF SHOULDER	W8-17, EDGE LINE STRIPING, AND TRAFFIC DRUMS(1)	A STABILIZED WEDGE, W8-17, EDGE LINE STRIPING AND TRAFFIC DRUMS(5)
> 24"	EDGE OF TRAVELED LANE OR EDGE OF SHOULDER	PRECAST CONCRETE BARRIER(4) & EDGE LINES	PRECAST CONCRETE BARRIER(4) & EDGE LINES

INTERSTATE		
VERTICAL DIFFERENTIAL	LOCATION	TRAFFIC CONTROL
≤ 3"	CENTERLINE	W8-11 AND LANE STRIPING
≤ 3"	EDGE OF TRAVELED LANE OR EDGE OF SHOULDER	W8-9, EDGE LINE STRIPING, AND TRAFFIC DRUMS(2)
> 3" ≤ 6"	EDGE OF TRAVELED LANE OR EDGE OF SHOULDER	W8-17, EDGE LINE STRIPING, AND TRAFFIC DRUMS(2)
> 6"	EDGE OF TRAVELED LANE OR EDGE OF SHOULDER	PRECAST CONCRETE BARRIER & EDGE LINES

INTERSTATE AND NON-INTERSTATE		
FORESLOPE	HEIGHT	TRAFFIC CONTROL
1:1	> 2 FT	PRECAST CONCRETE BARRIER
2:1	≤ 5 FT	TRAFFIC DRUMS
2:1	> 5 FT	PRECAST CONCRETE BARRIER
Flatter than 2:1	N/A	TRAFFIC DRUMS

GENERAL NOTES:

1. WHEN THE SHOULDER AREA IS USED AS PART OF THE TRAVELED LANE AND THERE IS INSUFFICIENT WIDTH TO PLACE TRAFFIC DRUMS ON THE REMAINING SHOULDER WIDTH, THEN VERTICAL PANELS SHALL BE USED.
2. WHEN THERE IS INSUFFICIENT WIDTH TO PLACE TRAFFIC DRUMS ON THE REMAINING SHOULDER WIDTH, A STABILIZED WEDGE SHALL BE USED.
3. PRECAST CONCRETE BARRIER WALL CAN BE USED IN LIEU OF A STABILIZED WEDGE, W8-17 SIGN, EDGE LINE STRIPING, AND TRAFFIC DRUMS, IF AND WHERE DIRECTED BY THE ENGINEER.
4. A STABILIZED WEDGE, W8-17 SIGN, EDGE LINE STRIPING, AND TRAFFIC DRUMS CAN BE USED IN LIEU OF PRECAST CONCRETE BARRIER WALL, IF AND WHERE DIRECTED BY THE ENGINEER.
5. W21-5, W21-5a, AND/OR W21-5b SIGNS SHALL BE USED WHERE THE ROADWAY IS UNOBSTRUCTED IF AND WHERE DIRECTED BY THE ENGINEER.
6. TIME LIMITATIONS MUST CONFORM TO SECTION 603 OF THE STANDARD SPECIFICATIONS FOR HIGHWAY CONSTRUCTION (CURRENT EDITION).

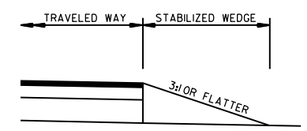

STABILIZED WEDGE

NOTE:
MATERIALS FOR THE STABILIZED WEDGE SHALL MEET THE REQUIREMENTS PROVIDED IN SECTION 603.02 OF THE STANDARD SPECIFICATIONS.

STOP SLOW PADDLE

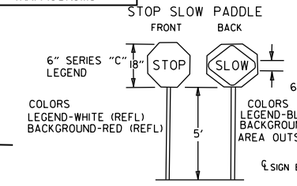

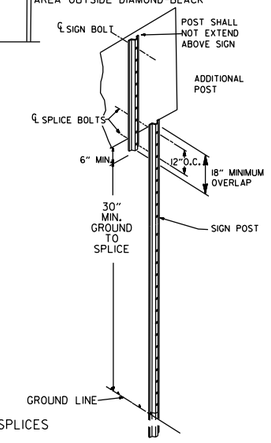

NOTES: USE SPLICES ONLY WHEN NECESSARY FOR INSTALLATION. TYPICAL INSTALLATION SHOULD HAVE NO SPLICES (SEE STD. DRAWING NO. SHS-21)

NORMAL INSTALLATIONS WILL REQUIRE 1/4" DIA. BOLTS TO MOUNT SIGNS TO POST AND 5/16" DIA. BOLTS TO ASSEMBLE THE VARIOUS POST SUPPORTS. EACH OF THESE BOLTS SHALL BE CARRIAGE BOLTS.

SIGN POSTS SHALL BE PAINTED GREEN; SIGNS SHALL NOT BE PAINTED, AND ALL SIGN POSTS SHALL BE PLUMB.

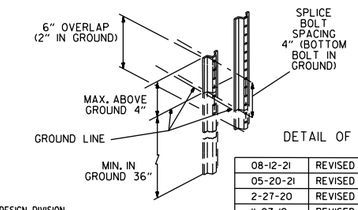

DETAIL OF SPLICES

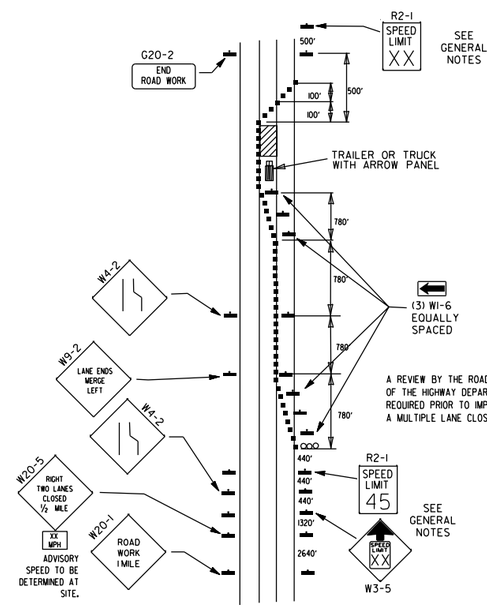

A REVIEW BY THE ROADWAY DESIGN DIVISION OF THE HIGHWAY DEPARTMENT WILL BE REQUIRED PRIOR TO IMPLEMENTING A MULTIPLE LANE CLOSURE.

(D) TYPICAL APPLICATION - CLOSING MULTIPLE LANES OF A MULTILANE HIGHWAY.

DATE	REVISION	FILMED
08-12-21	REVISED TRAFFIC CONTROL DEVICES AND NOTES	
05-20-21	REVISED NOTE 10	
2-27-20	REVISED TRAFFIC CONTROL DEVICES DETAILS	
11-07-19	REVISED NOTE 9, ADDED NOTE 11	
7-25-19	REVISED TRAFFIC CONTROL DEVICES DETAILS	
9-2-15	REVISED NOTE 2 & REPLACED R2-5A WITH W3-5	
10-15-09	ADDED REFERENCE TO MASH	
11-20-08	REVISED SIGN DESIGNATIONS	
11-18-04	ADDED NOTE	
10-1-98	ADDED NOTE	
4-03-97	ADDED (SP) TO W6-1& REVISED TRAFFIC CONTROL DEVICES NOTE	
10-18-96	ADDED R55-1	
10-12-95	MOVED UPPER SPLICE	
6-8-95	REVISED SPLICE DETAIL, TEXT	6-8-95
2-2-95	REVISED PER PART VI, MUTCD, SEPT. 3, 1993	
8-15-91	DRAWN AND PLACED IN USE	

ARKANSAS STATE HIGHWAY COMMISSION

STANDARD TRAFFIC CONTROLS FOR HIGHWAY CONSTRUCTION

STANDARD DRAWING TC-3

GENERAL NOTES

INSTALL A MINIMUM OF 2 UPSLOPE STAKES AND 4 DOWNSLOPE STAKES AT AN ANGLE TO WEDGE WATTLE TO BOTTOM OF DITCH.

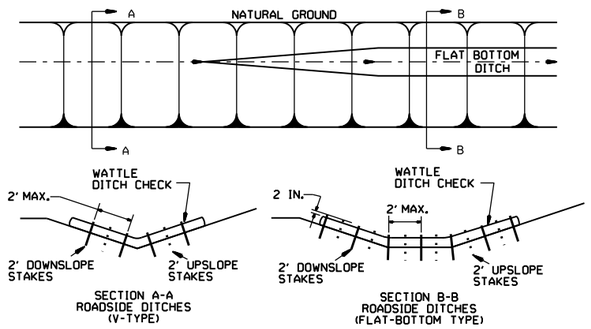

WATTLE DITCH CHECK (E-1)

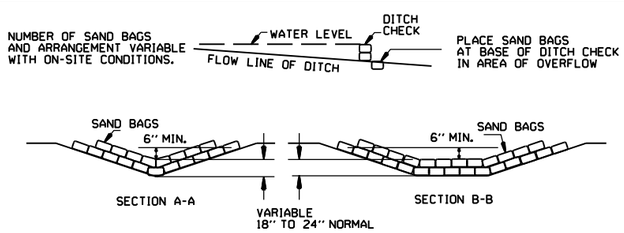

SAND BAG DITCH CHECK (E-5)

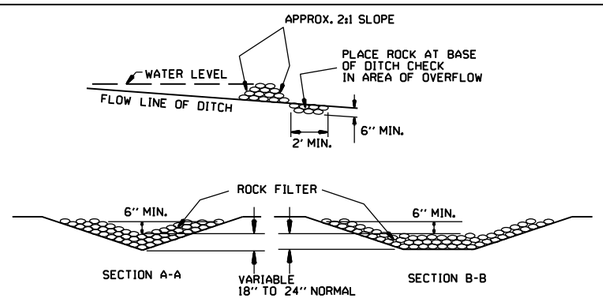

ROCK DITCH CHECK (E-6)

GENERAL NOTES

GEOTEXTILE FABRIC (TYPE 4) IN ACCORDANCE WITH SECTION 625

GEOTEXTILE FABRIC SHALL BE SPLICED TOGETHER WITH A SEWN SEAM ONLY AT A SUPPORT POST OR TWO SECTIONS OF FENCE MAY BE OVERLAPPED INSTEAD. PAYMENT OF ADDITIONAL MATERIAL FOR OVERLAP WILL NOT BE MADE.

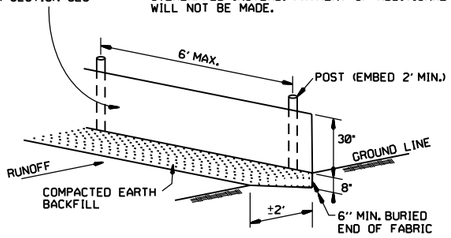

SILT FENCE (E-11)

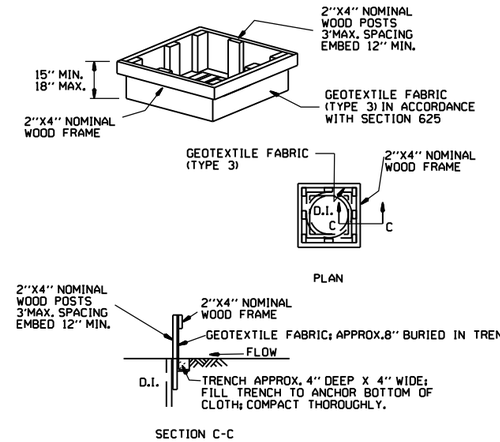

DROP INLET SILT FENCE (E-7)

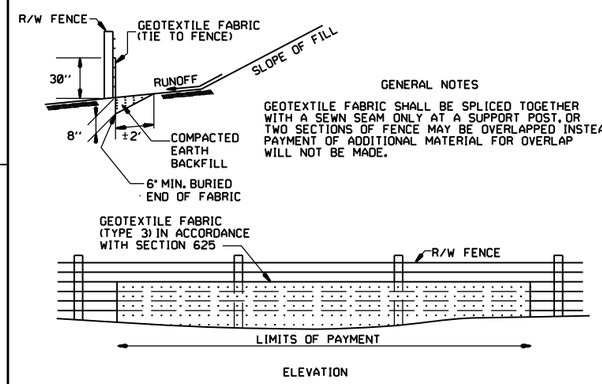

GENERAL NOTES

GEOTEXTILE FABRIC SHALL BE SPLICED TOGETHER WITH A SEWN SEAM ONLY AT A SUPPORT POST, OR TWO SECTIONS OF FENCE MAY BE OVERLAPPED INSTEAD. PAYMENT OF ADDITIONAL MATERIAL FOR OVERLAP WILL NOT BE MADE.

SILT FENCE ON R/W FENCE (E-4)

GENERAL NOTES

1. STRAW BALES SHALL BE INSTALLED SO THAT THE BINDINGS ARE ORIENTED AROUND THE SIDES RATHER THAN ALONG THE TOPS AND BOTTOMS OF THE BALES. THE BALES SHALL BE A MINIMUM OF 30 INCHES IN LENGTH.

2. NO GAPS SHALL BE LEFT BETWEEN BALES.

3. BALED STRAW FILTER BARRIERS COMPLETED AND ACCEPTED WILL BE MEASURED BY THE BALE IN PLACE AS AUTHORIZED BY THE ENGINEER AND WILL BE PAID FOR AT THE CONTRACT UNIT PRICE BID PER BALE FOR BALED STRAW DITCH CHECKS.

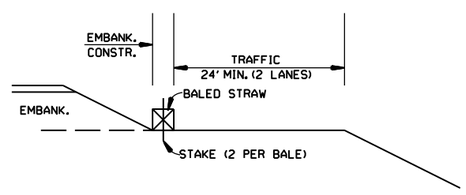

BALED STRAW FILTER BARRIER (E-2)

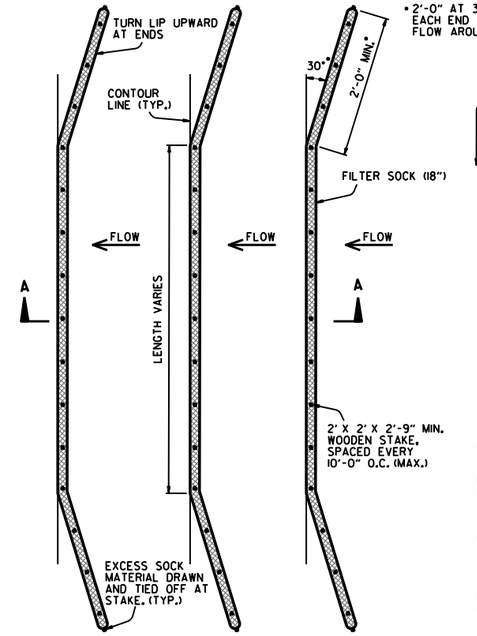

PLAN VIEW
N.T.S.

* 2'-0" AT 30° ANGLE EACH END TO PREVENT FLOW AROUND (TYP.)

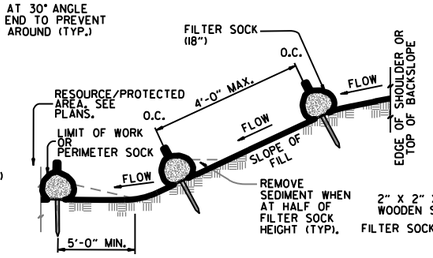

SECTION A-A
N.T.S.

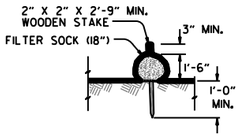

STAKING DETAIL
N.T.S.

NOTES:

1. FILTER SOCKS CAN BE PLACED AT THE TOP, ON THE FACE, AND AT THE TOE OF SLOPES AS SEDIMENT-TRAPPING DEVICES FOR SHEET FLOW RUNOFF.

2. FILTER SOCKS ARE TYPICALLY SUPPLIED AND INSTALLED WITH 18 INCH DIAMETERS. DIAMETER TOLERANCE IS 2 INCHES. AS FILTER SOCKS TEND TO FLATTEN OUT WHEN PLACED.

3. STEEL POSTS MAY BE USED AND SHALL BE ROLLED FROM HIGH CARBON STEEL AND HAVE A MINIMUM OF 1.25 LB./FT. POSTS SHALL BE HOT-DIPPED GALVANIZED OR PAINTED WITH HIGH-GRADE WEATHER RESISTANT BROWN OR BLACK STEEL PAINT. STEEL POSTS SHALL BE EQUIPPED WITH ANCHOR PLATE HAVING A MINIMUM AREA OF 14 SQUARE INCHES. POSTS SHALL BE STUDDED, EMBOSSED, OR PUNCHED. POSTS AND ANCHOR PLATES SHALL CONFORM TO THE REQUIREMENTS OF ASTM A702. NO ADDITIONAL PAYMENT WILL BE PROVIDED FOR STEEL POSTS, BUT PRICE WILL BE CONSIDERED SUBIDIARY TO "FILTER SOCK (18")."

4. FILTER SOCKS MAY BE UP TO 250 FEET LONG. WHEN USED ON LONG SLOPES, FILTER SOCKS MAY BE JOINTED OR STAGGERED AS SHOWN IN DETAILS.

5. INSPECT FILTER SOCKS AFTER EACH RUNOFF EVENT. REMOVE AND REPLACE IF SIGNS OF UNDERCUTTING OR DOWNSTREAM RILLS ARE OBSERVED.

FILTER SOCK ALONG SLOPE (E-3)

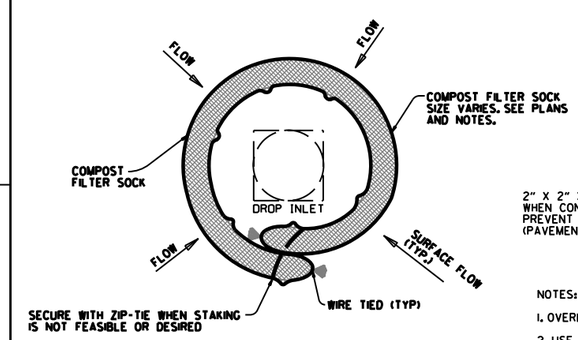

DROP INLET PLAN VIEW
N.T.S.

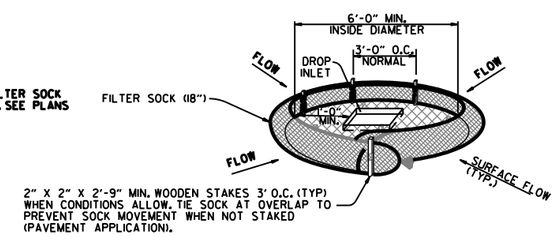

DROP INLET PERSPECTIVE VIEW
N.T.S.

NOTES:

1. OVERLAP ENDS OF SOCK (1' MIN. 3' MAX.).

2. USE 18" DIA. SOCK IN NON-TRAFFIC AREAS OR AREAS WHERE SAFETY IS NOT A CONCERN.

COMPOST FILTER SOCK DROP INLET PROTECTION (E-13)

DATE	REVISION	FILMED
11-16-17	ADDED FILTER SOCK E-3 AND E-13	
12-15-11	DELETED BALED STRAW DITCH CHECK & ADDED WATTLE DITCH CHECK	
11-18-98	ADDED NOTES	
07-02-98	ADDED BALED STRAW FILTER BARRIER (E-2)	
07-20-95	REVISED SILT FENCE E-4 AND E-11	7-20-95
07-15-94	REV. E-4 & E-11 MIN. 13" BURIED END OF FABRIC	
06-02-94	REVISED E-1,4,7 & 11; DELETED E-2 & 3	6-2-94
04-01-93	REDRAWN	
10-01-92	REDRAWN	
08-02-76	ISSUED R.D.M.	298-7-28-76

ARKANSAS STATE HIGHWAY COMMISSION

TEMPORARY EROSION CONTROL DEVICES

STANDARD DRAWING TEC-1

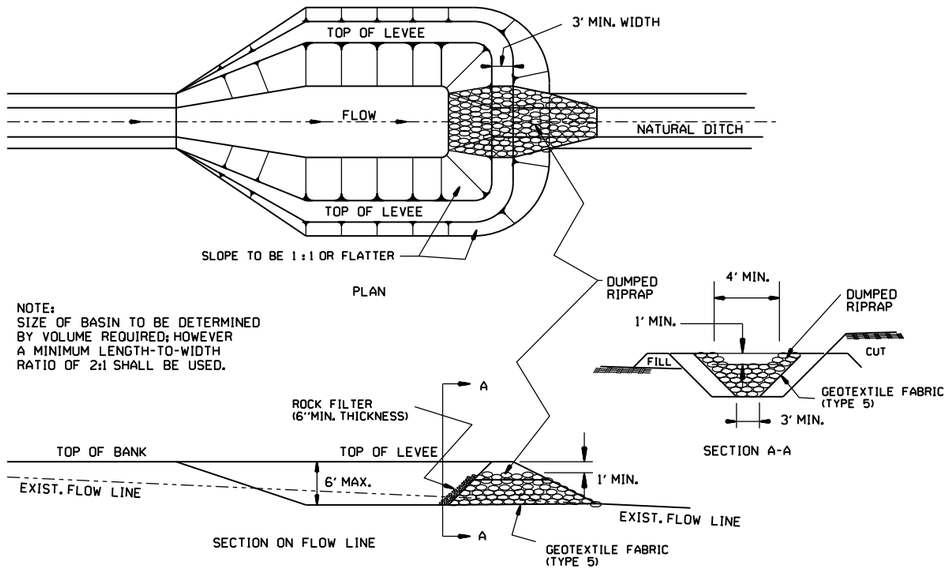

SEDIMENT BASIN WITH RIPRAP OUTLET (E-9)

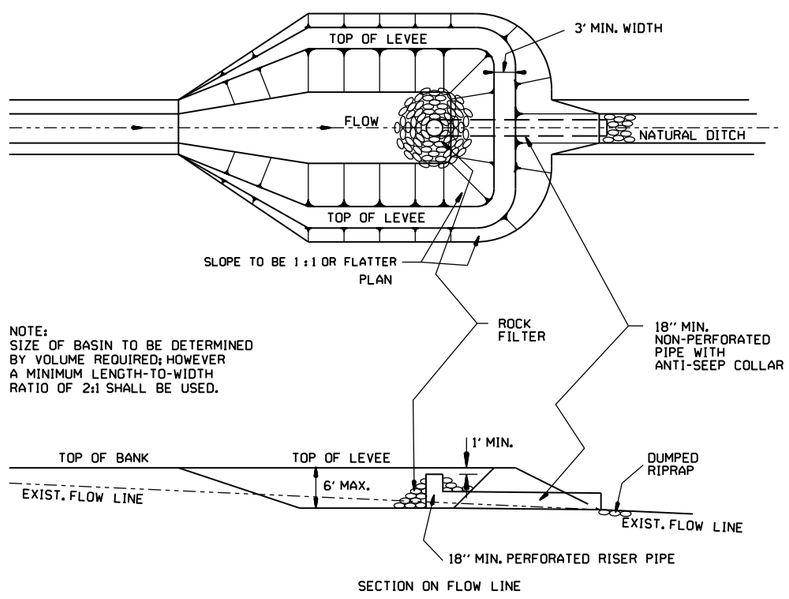

SEDIMENT BASIN WITH PIPE OUTLET (E-10)

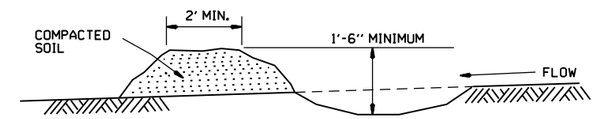

DIVERSION DITCH (E-8)

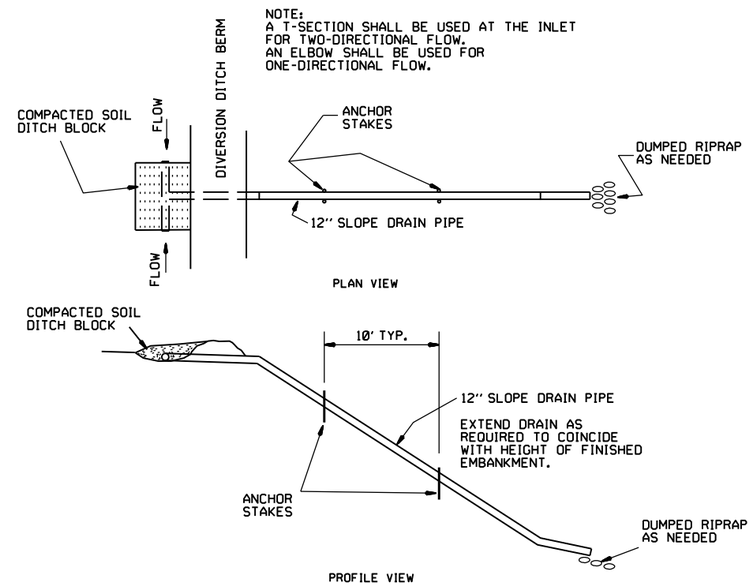

SLOPE DRAIN (E-12)

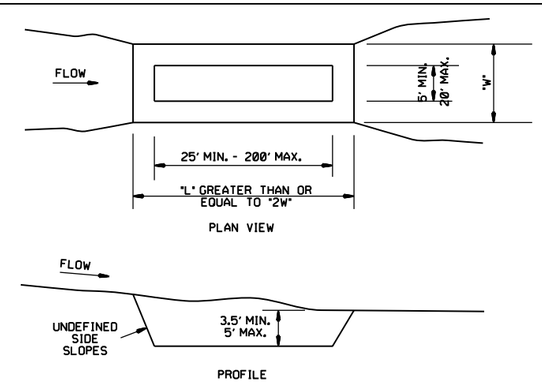

SEDIMENT BASIN (E-14)

DATE	REVISION	FILMED
6-2-94	Revised E-8 & E-12; Added E-14 & Deleted E-13	
4-1-93	ISSUED	

ARKANSAS STATE HIGHWAY COMMISSION

TEMPORARY EROSION CONTROL DEVICES

STANDARD DRAWING TEC-2

CLEARING AND GRUBBING

CONSTRUCTION SEQUENCE

1. PLACE PERIMETER CONTROLS (I.E. SILT FENCES , DIVERSION DITCHES, SEDIMENT BASINS, ETC.)
2. PERFORM CLEARING AND GRUBBING OPERATION.

EXCAVATION

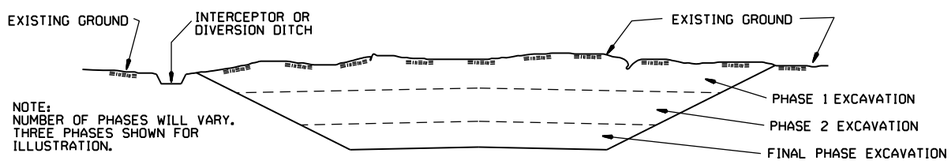

NOTE:
NUMBER OF PHASES WILL VARY.
THREE PHASES SHOWN FOR ILLUSTRATION.

GENERAL NOTE

ALL CUT SLOPES SHALL BE DRESSED, PREPARED, SEEDED, AND MULCHED AS THE WORK PROGRESSES. SLOPES SHALL BE EXCAVATED AND STABILIZED IN EQUAL INCREMENTS NOT TO EXCEED 25 FEET, MEASURED VERTICALLY.

CONSTRUCTION SEQUENCE

1. EXCAVATE AND STABILIZE INTERCEPTOR AND/OR DIVERSION DITCHES.
2. PERFORM PHASE 1 EXCAVATION. PLACE PERMANENT OR TEMPORARY SEEDING.
3. PERFORM PHASE 2 EXCAVATION. PLACE PERMANENT OR TEMPORARY SEEDING.
4. PERFORM FINAL PHASE OF EXCAVATION. PLACE PERMANENT OR TEMPORARY SEEDING. STABILIZE DITCHES. CONSTRUCT DITCH CHECKS, DIVERSION DITCHES, SEDIMENT BASINS, OR OTHER EROSION CONTROL DEVICES AS REQUIRED.

EMBANKMENT

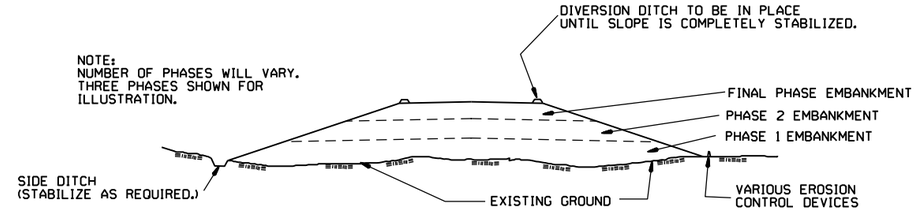

NOTE:
NUMBER OF PHASES WILL VARY.
THREE PHASES SHOWN FOR ILLUSTRATION.

GENERAL NOTE

ALL EMBANKMENT SLOPES SHALL BE DRESSED, PREPARED, SEEDED, AND MULCHED AS THE WORK PROGRESSES. SLOPES SHALL BE CONSTRUCTED AND STABILIZED IN EQUAL INCREMENTS NOT TO EXCEED 25 FEET, MEASURED VERTICALLY.

CONSTRUCTION SEQUENCE

1. CONSTRUCT DIVERSION DITCHES, DITCH CHECKS, SEDIMENT BASINS, SILT FENCES, OR OTHER EROSION CONTROL DEVICES AS SPECIFIED.
2. PLACE PHASE 1 EMBANKMENT WITH PERMANENT OR TEMPORARY SEEDING. PROVIDE DIVERSION DITCHES AND SLOPE DRAINS IF EMBANKMENT CONSTRUCTION IS TO BE TEMPORARILY ABANDONED FOR A PERIOD OF GREATER THAN 21 DAYS.
3. PLACE PHASE 2 EMBANKMENT WITH PERMANENT OR TEMPORARY SEEDING. PROVIDE DIVERSION DITCHES AND SLOPE DRAINS IF EMBANKMENT CONSTRUCTION IS TO BE TEMPORARILY ABANDONED FOR A PERIOD OF GREATER THAN 21 DAYS.
4. PLACE FINAL PHASE OF EMBANKMENT WITH PERMANENT OR TEMPORARY SEEDING. PLACE DIVERSION DITCHES AND SLOPE DRAINS AND MAINTAIN UNTIL ENTIRE SLOPE IS STABILIZED.

DATE	REVISION	FILMED
11-03-94	CORRECTED SPELLING	
6-2-94	Drawn & Issued	6-2-94

ARKANSAS STATE HIGHWAY COMMISSION

TEMPORARY EROSION CONTROL DEVICES

STANDARD DRAWING TEC-3

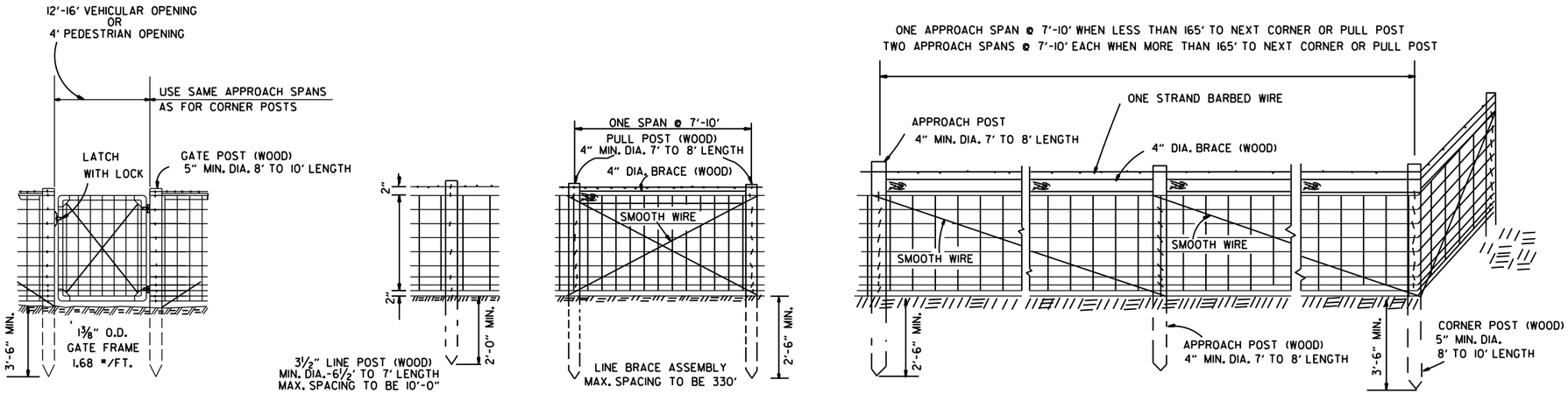

NOTE: STAPLE AT LEAST TOP, BOTTOM AND ALTERNATE WIRES OF WOVEN FABRIC FOR WOOD LINE POSTS.

TYPE A FENCE (WOOD POSTS)

GENERAL NOTES:

STEEL LINE POSTS SHALL BE GALVANIZED, 7 FT. IN LENGTH.

TUBULAR END, CORNER, PULL, OR DIAGONAL BRACES MUST CONFORM TO THE DIMENSIONS AND WEIGHTS SPECIFIED ON STANDARD DRAWING WF-3 (CHAIN LINK).

THE CONTRACTOR SHALL FURNISH AT LEAST 25% OF WOOD LINE POSTS OF 7' LENGTHS IN ORDER TO PROVIDE SUFFICIENT SET IN SOFT GROUND OR SMALL DEPRESSIONS.

GATE HINGES AND LATCHES WITH LOCKS TO BE OF A TYPE APPROVED BY THE ENGINEER. DRIVEWAY GATES, EITHER SINGLE 12' OR 16' OR DOUBLE 6' TO 8' OPENINGS OF THE SAME TYPE AS THE PEDESTRIAN GATE, SHALL BE INSTALLED ON THE RIGHT SIDE OF EACH THROUGH LANE ROAD AT LARGE CULVERTS OR BRIDGE CROSS FENCE FOR USE BY MAINTENANCE EQUIPMENT. LOCATION OF GATES TO BE SHOWN ON THE PLANS OR AS DESIGNATED BY THE ENGINEER.

AT STREAM CROSSINGS THE FENCE SHALL NOT BE CONSTRUCTED ACROSS LARGE STREAMS. WHERE CLEARANCE IS SUFFICIENT FROM THE TOP OF BANK TO THE BRIDGE STRUCTURE, A CROSS CONNECTION SHALL BE CONSTRUCTED BETWEEN THE FENCE ON EACH SIDE OF THE ROAD. WHERE THE CLEARANCE IS NOT SUFFIEICNT, THE FENCE SHALL BE TERMINATED WITH CROSS CONNECTIONS AND END POSTS ADJACENT TO THE BRIDGE ABUTMENTS OR CULVERT WINGWALLS.

SPLICE FOR WOVEN WIRE BETWEEN PULL POST SHALL BE BY THE "WESTERN UNION METHOD" AS DESCRIBED AS FOLLOWS: THE VERTICAL WIRES FOR EACH END OF THE FENCE FABRIC SHALL BE PLACED SIDE BY SIDE AND THE PROJECTING HORIZONTAL WIRES SHALL BE WRAPPED A MINIMUM OF 4 TIMES AROUND THE HORIZONTAL WIRES OF THE FIRST WEB.

SPLICE FOR BARBED WIRE BETWEEN PULL POST ASSEMBLY SHALL BE BY THE "EYE METHOD"; AS DESCRIBED AS FOLLOWS: THE ENDS OF THE BARBED WIRE SHALL BE BENT TO FORM A LOOP. THE LOOPS SHALL BE CONNECTED. AFTER THE LOOPS ARE CONNECTED THE ENDS OF THE WIRE SHALL BE WRAPPED AROUND THE PROJECTING WIRE A MINIMUM OF 4 TIMES FOR EACH WIRE LOOP.

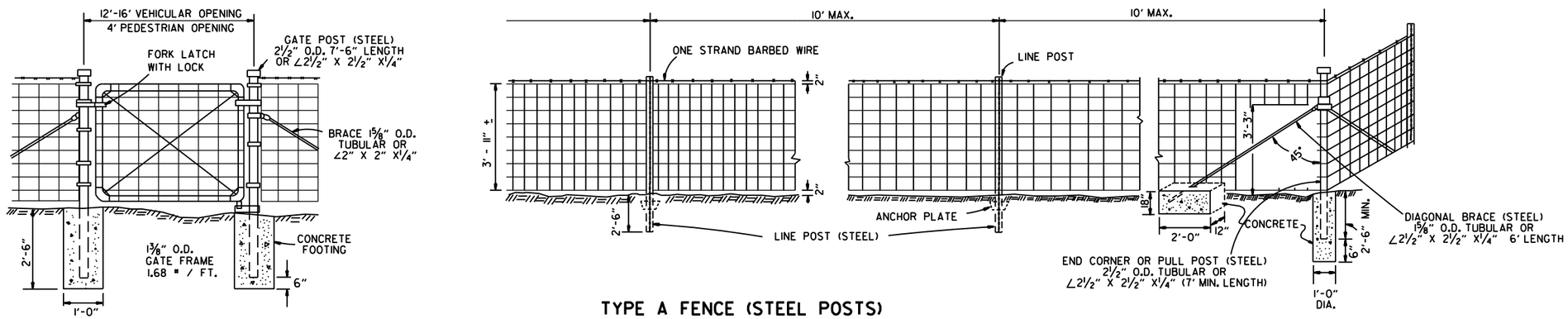

TYPE A FENCE (STEEL POSTS)

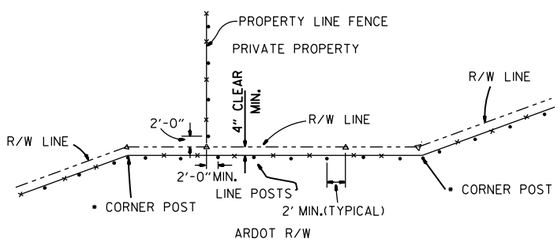

•NOTE: RIGHT-OF-WAY MONUMENTS SHALL NOT BE DISTURBED BY FENCE CONSTRUCTION. CORNER POSTS SHALL BE CONSTRUCTED 2' FROM THE RIGHT-OF-WAY MONUMENT OR AS DIRECTED BY THE ENGINEER.

△ - R/W MONUMENTS
• - FENCE POSTS

RIGHT-OF-WAY FENCE LOCATION

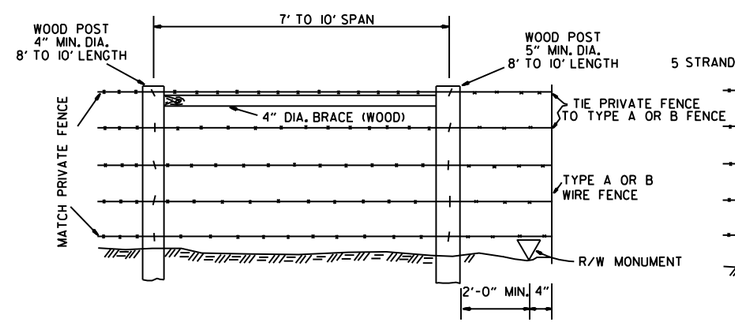

WHERE EXISTING PRIVATE FENCE CONSISTS OF STEEL POSTS, USE END POST ASSEMBLY AS SHOWN WITH TYPE A FENCE OR OTHER END POST ASSEMBLY AS APPROVED BY THE ENGINEER.

PRIVATE FENCE TERMINAL INSTALLATION

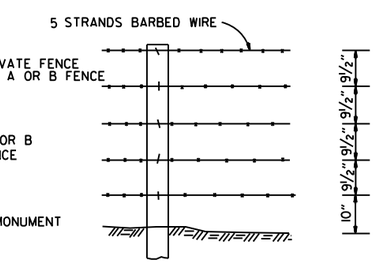

SPACING AND SIZE OF POSTS FOR TYPE B FENCE SHALL BE THE SAME AS TYPE A FENCE.

TYPE B FENCE

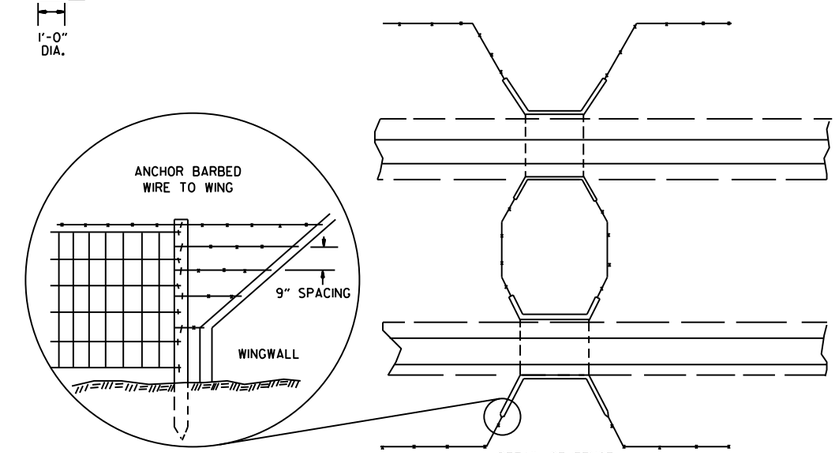

DETAIL OF FENCE CONSTRUCTION AT LARGE CULVERTS (5' IN HEIGHT AND OVER)

DATE	REVISION	DATE FILMED
8-22-02	REVISED GENERAL NOTES	
10-18-96	REVISED ASTM REF. TO AASHTO	
11-22-95	REVISED R-O-W LOCATION DETAIL	
6-2-94	ADDED CORNER POST NOTE	6-2-94
8-5-93	REVISED R-O-W LOCATION DETAIL	8-5-93
10-1-92	ADDED STAPLE NOTE	
8-2-90	REV'D PULL POST LENGTH	
11-30-89	DELETED CLASS CONC.	
7-15-88	ADDED SPLICE NOTES	
7-15-88	ADDED HEIGHT DIMENSION	
4-3-87	REVISED VARIOUS NOTES	
	AND GENERAL NOTES	
11-1-84	MAX. POST SPACING	
1-4-83	MIN. DIA. LINE POST	
10-2-72	REVISED & REDRAWN	

ARKANSAS STATE HIGHWAY COMMISSION

WIRE FENCE
TYPE A AND B

STANDARD DRAWING WF-1

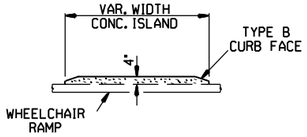

CONCRETE ISLAND DETAIL

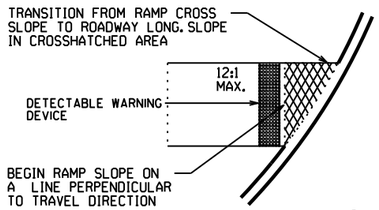

SLOPE TRANSITION DETAILS

TYPE 1 RAMP DIMENSIONS AND QUANTITIES

RADIUS "R" FEET	DISTANCE "X" FEET	DISTANCE "Y" FEET	LENGTH "L" FEET	RAMP AREA "A" SQ. YD.
15	11.67	18.82	32.18	26.21
20	11.52	22.28	35.46	30.07
25	11.43	26.60	38.77	33.80
30	11.37	30.26	40.93	36.90
35	11.33	33.51	43.11	39.77
40	11.30	36.45	45.26	42.45
45	11.27	39.16	47.34	44.97
50	11.25	41.69	49.36	47.35
55	11.24	44.07	51.31	49.63
60	11.22	46.33	53.21	51.80

GENERAL NOTES FOR DETECTABLE WARNING DEVICES

THE DETECTABLE WARNING DEVICE SHALL BE LOCATED SO THAT THE NEAREST EDGE OF THE DEVICE IS 6 TO 8 INCHES FROM THE FACE OF THE CURB.
TRUNCATED DOMES IN THE DETECTABLE WARNING SURFACE SHALL MEET THE REQUIREMENTS OF THE GEOMETRIC CONFIGURATION SHOWN.
DOMES SHALL BE ALIGNED ON A SQUARE GRID IN THE PREDOMINANT DIRECTION OF TRAVEL TO PERMIT WHEELS TO ROLL BETWEEN DOMES.
DETECTABLE WARNING DEVICE SHALL BE 24 INCHES IN THE DIRECTION OF TRAVEL AND EXTEND THE FULL WIDTH OF THE CURB RAMP OR FLUSH SURFACE.
DETECTABLE WARNING DEVICE SHALL BE ON THE ARDOT QUALIFIED PRODUCTS LIST FOR CAST-IN-PLACE TACTILE PANELS (ADA DETECTABLE WARNING).

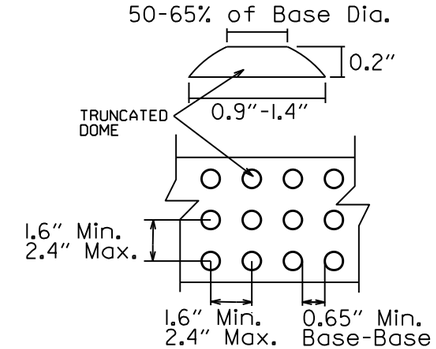

DETECTABLE WARNING DEVICE DETAIL

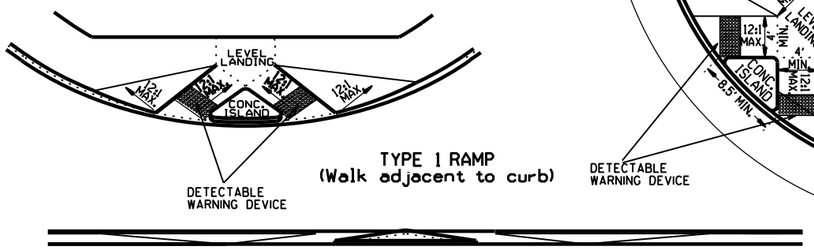

TYPE 1 RAMP
(Walk adjacent to curb)

SECTION A-A

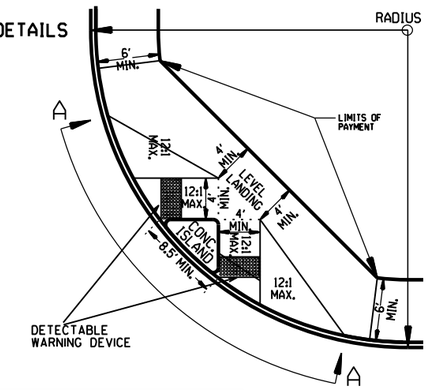

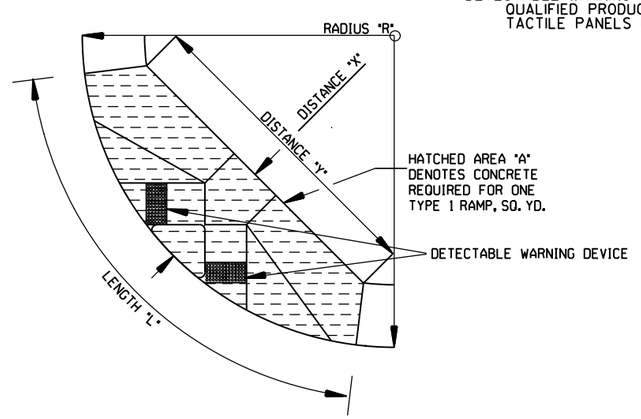

GENERAL NOTES:

IN NEW CONSTRUCTION, UNLESS OTHERWISE INDICATED ON THE PLANS, WHEELCHAIR RAMPS ARE TO BE PROVIDED AT ALL CORNERS OF CURBED STREET INTERSECTIONS AND MID-BLOCK CROSSWALK LOCATIONS.
IN ALTERATIONS WHEELCHAIR RAMPS ARE TO BE PROVIDED AT CURBED STREET INTERSECTIONS WITH PEDESTRIAN TRAFFIC AND MID-BLOCK CROSSWALK LOCATIONS.

THE LENGTH OF THE RAMP SHALL BE SUCH THAT THE SLOPE DOES NOT EXCEED 12:1. THE SURFACE TEXTURE OF THE RAMP SHALL CONFORM TO A CLASS 6 FINISH ACCORDING TO SECTION 802.19.

THE NORMAL GUTTER GRADE SHALL BE MAINTAINED THROUGH THE AREA OF THE RAMP.
ALL PAVEMENT MARKINGS SHALL BE IN ACCORDANCE WITH THE LATEST EDITION OF THE MANUAL OF UNIFORM TRAFFIC CONTROL DEVICES PUBLISHED BY THE FEDERAL HIGHWAY ADMINISTRATION.
THE MINIMUM THICKNESS OF THE RAMP, WALK, & LANDING SHALL BE 4".
THE MINIMUM WIDTH OF THE RAMPS SHALL BE THE WALK WIDTH OR 36", WHICHEVER IS GREATER.

RAMPS SHALL BE MODIFIED AS NECESSARY TO INSURE THAT THEY ARE PARALLEL TO A LINE DRAWN FROM THE CENTER OF ONE RAMP TO THE CENTER OF THE RAMP ON THE OPPOSITE SIDE OF THE INTERSECTION.

THE DIMENSIONS AND QUANTITIES SHOWN ON THIS DRAWING ARE FOR A 90° INTERSECTION ONLY. DIMENSIONS AND QUANTITIES FOR SKEWED INTERSECTIONS WILL VARY, AND ARE TO BE DETERMINED BY THE ENGINEER.

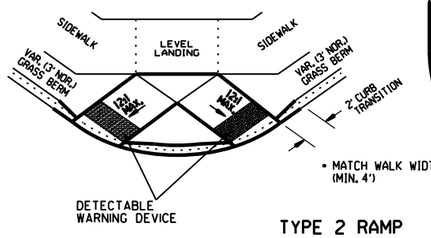

TYPE 2 RAMP

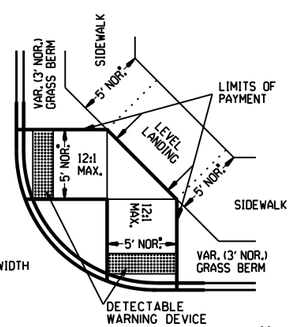

NOTE:
THE CROSS SLOPE OF THE RAMPS, LEVEL LANDINGS, AND SIDEWALKS SHALL NOT EXCEED 2.0% UNLESS REQUIRED TO MATCH STREET LONGTITUDINAL GRADE.

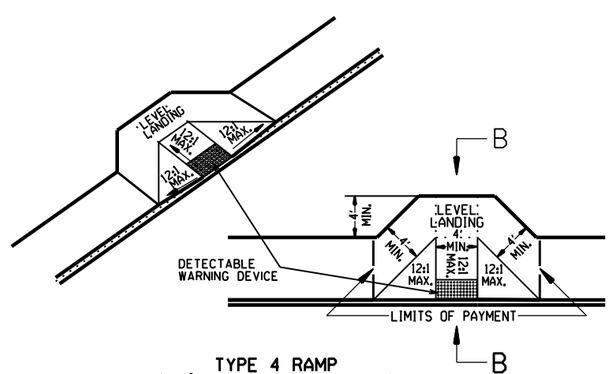

TYPE 4 RAMP
(Walk adjacent to curb)

RAMP SELECTION CRITERIA

FIRST CHOICE	TYPE 1	CORNER LOCATIONS WITH THE WALK ADJACENT TO THE CURB (BOTH NEW CONSTRUCTION AND ALTERATIONS).
	TYPE 2	CORNER LOCATIONS WITH THE WALK OFFSET FROM THE CURB A DISTANCE INSUFFICIENT TO ALLOW THE REQUIRED RAMP SLOPE (BOTH NEW CONSTRUCTION AND ALTERATIONS).
	TYPE 3	CORNER LOCATIONS WITH THE WALK OFFSET FROM THE CURB A DISTANCE SUFFICIENT TO ALLOW THE REQUIRED RAMP SLOPE (BOTH NEW CONSTRUCTION AND ALTERATIONS).
	TYPE 4	TANGENT LOCATIONS (BOTH NEW CONSTRUCTION AND ALTERATIONS).
SECOND CHOICE	TYPE 5	TANGENT LOCATIONS (ALTERATIONS ONLY).
THIRD CHOICE	TYPE 6	CORNER LOCATIONS (ALTERATIONS ONLY). THIS RAMP MAY BE USED ONLY IF THE TYPE 5 RAMPS CANNOT BE PLACED AT THE ENDS OF THE RADIUS.
FOURTH CHOICE		IF SITE CONSTRAINTS PREVENT THE CONSTRUCTION OF ANY OF THE TYPES LISTED, THEN AND ONLY THEN CAN THE 12:1 MAX. SLOPE ON THE RAMP BE EXCEEDED TO PROVIDE ACCESS TO THE STREET LEVEL (ALTERATIONS ONLY). THE SLOPE CAN BE STEEPENED TO A 10:1 MAX. FOR A MAX. LENGTH OF 5' OR A 8:1 MAX. FOR A MAX. LENGTH OF 2'. SLOPES STEEPER THAN 8:1 ARE NOT ALLOWED UNDER ANY CIRCUMSTANCES.

NOTE: IN ALTERATIONS, THE SELECTION OF THE TYPE OF WHEELCHAIR RAMP TO BE CONSTRUCTED SHALL BE BASED ON THE AMOUNT OF RIGHT-OF-WAY AVAILABLE, AND ON THE PRESENCE OF OTHER SITE CONSTRAINTS (UTILITIES, BUILDINGS, ETC.). THE TABLE ABOVE LISTS THE ORDER IN WHICH THE RAMPS ARE TO BE CONSIDERED.

AN ALTERATION IS DEFINED AS A PROJECT THAT CHANGES OR AFFECTS THE USE OF A PEDESTRIAN PATHWAY (OVERLAYS, SIGNALIZATION PROJECTS, ETC.) BUT DOES NOT REQUIRE THE PURCHASE OF ADDITIONAL RIGHT-OF-WAY. ALL PROJECTS THAT REQUIRE THE PURCHASE OF ADDITIONAL RIGHT-OF-WAY WILL USUALLY BE CONSIDERED NEW CONSTRUCTION FOR THE PURPOSES OF THE CHART ABOVE.

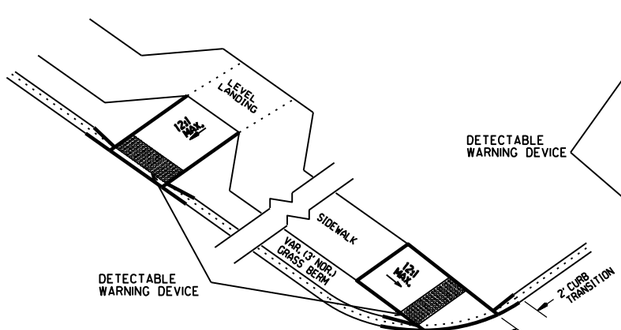

TYPE 3 RAMP

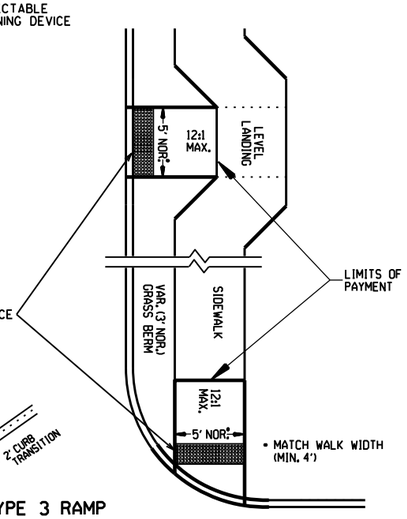

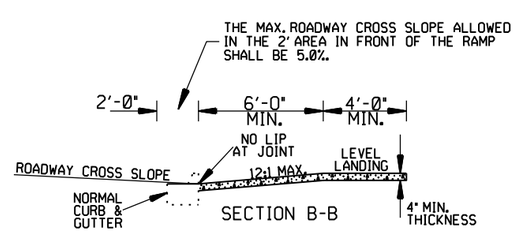

SECTION B-B

DATE	REVISION	DATE FILM
11-10-05	REVISED TO NEW SIDEWALK POLICY	
10-9-03	REVISED GEN. NOTES & ADDED NOTE	
4-10-03	REV. DETECTABLE WARNING DEVICES	
8-22-02	ADD DETECTABLE WARNING DEVICES	
3-30-00	ADD.SLOPE TRANS. & REV. ISL. DIMS.	
11-18-98	REVISED NOTES	
8-12-98	REVISED TEXTURE	
7-02-98	REDRAWN & REISSUED	
10-18-96	CORRECTED DIMENSIONS	10-18-96
5-24-90	FROM8#TO12#MAX.SLOPES	5-24-90
7-15-88	ADJUSTED MAX. SLOPE	652-7-15-88
7-14-88	INCLUD."CONC. ISLD."IN PAY ITEM	------
6-02-76	ISSUED-P.H.D.	299-7-28-76

ARKANSAS STATE HIGHWAY COMMISSION

WHEELCHAIR RAMPS
NEW CONSTRUCTION
AND ALTERATIONS

STANDARD DRAWING WR-1

DATE REVISED	DATE FILMED	DATE REVISED	DATE FILMED	FED. ROAD DIST. NO.	STATE	FED. AID PROJ. NO.	SHEET NO.	TOTAL SHEETS
				6	ARK.			
				JOB NO.				
				1	EMBANKMENT & BACKFILL		55000	

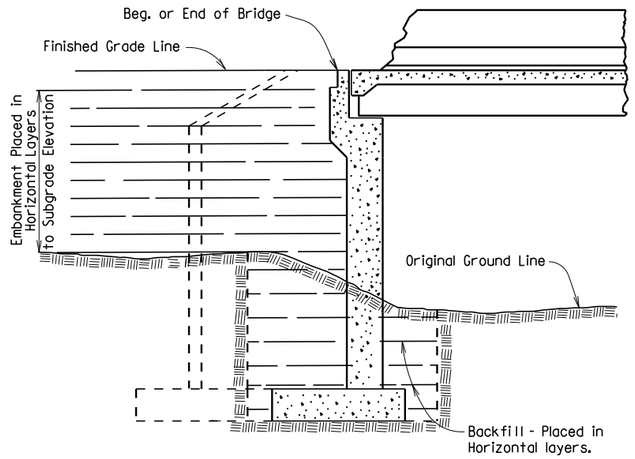

EMBANKMENT CONSTRUCTION AND FOOTING BACKFILL AT VERTICAL WALL ABUTMENTS

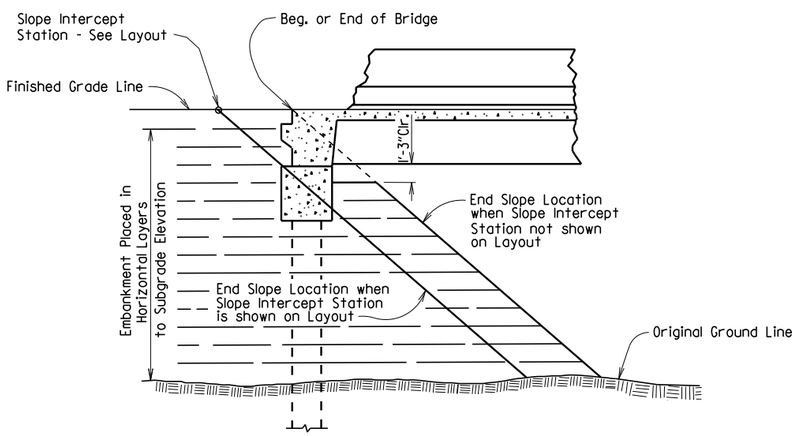

EMBANKMENT CONSTRUCTION AT SPILL-THROUGH PILE END BENTS

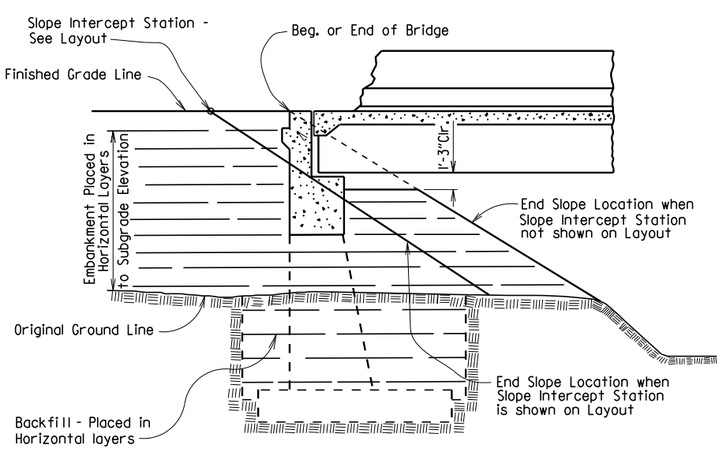

EMBANKMENT CONSTRUCTION AND FOOTING BACKFILL AT SPILL-THROUGH END BENTS

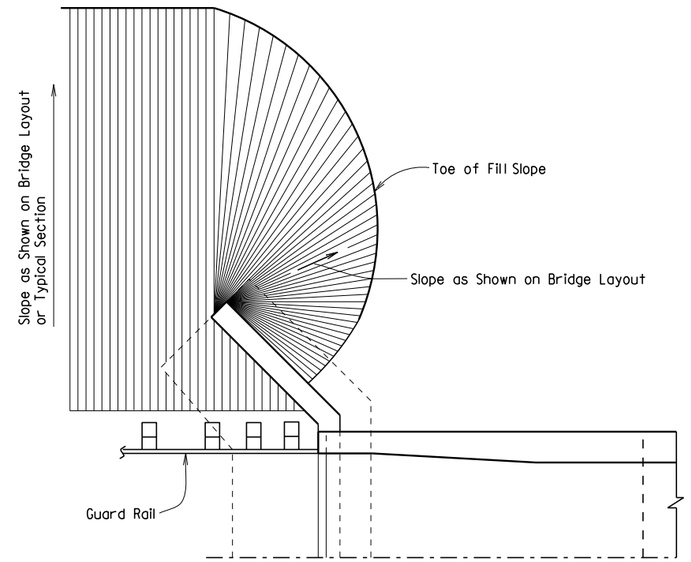

VERTICAL WALL ABUTMENTS

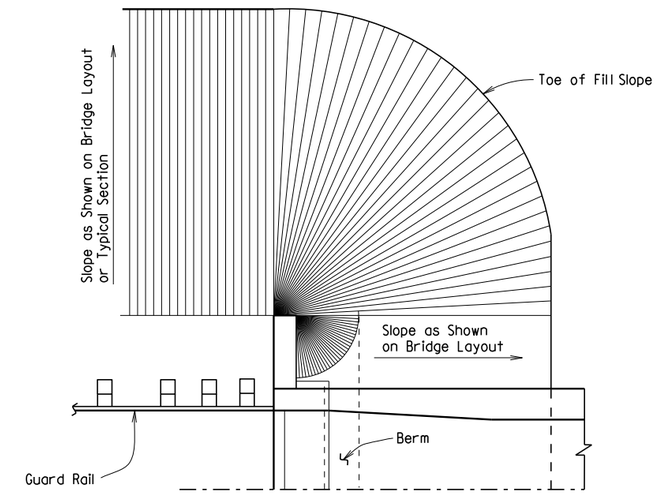

SPILL-THROUGH END BENTS WITH STUB WING

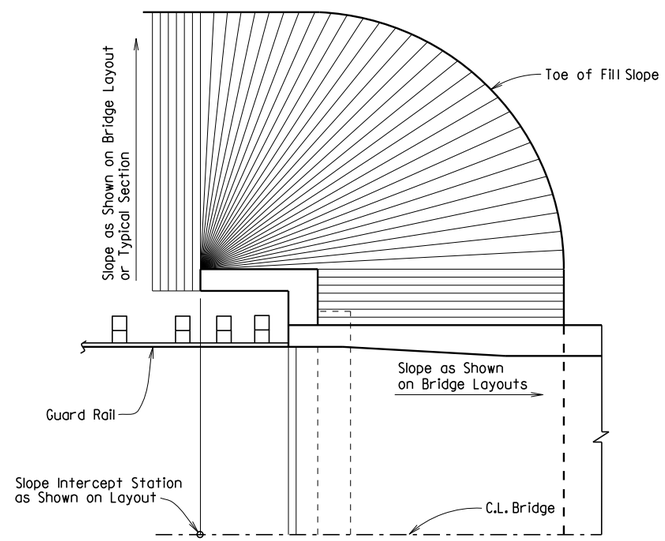

SPILL-THROUGH END BENTS WITH TURNBACK WING

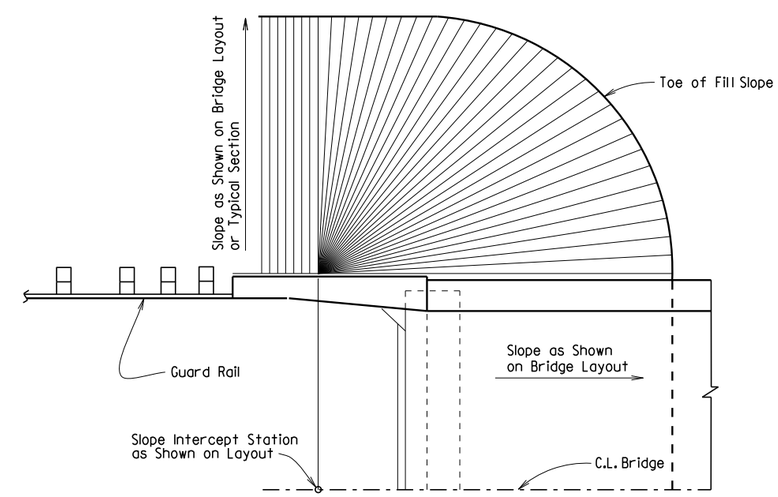

SPILL-THROUGH END BENTS WITH TRANSITION WING

METHOD OF DETERMINING FILL SLOPE LOCATION AT BRIDGE ENDS

GENERAL NOTES

The Bridge End Embankment shall be defined as a section of embankment, not less than 20 feet long adjacent to the bridge end, together with the side slopes and slopes under the bridge end including around the end of wingwalls. Embankment adjacent to structures shall be constructed in 6 inch horizontal layers (loose measure) and compacted by the use of mechanical equipment to the satisfaction of the Engineer. Refer to Subsections 210.09, 210.10 and 801.08 for construction requirements.

STANDARD DETAILS FOR EMBANKMENT CONSTRUCTION AND BACKFILL AT BRIDGE ENDS

ARKANSAS STATE HIGHWAY COMMISSION

LITTLE ROCK, ARK.

DRAWN BY:	KDH	DATE:	2-27-2014	FILENAME:	b55000.dgn
CHECKED BY:	BEF	DATE:	2-27-2014	SCALE:	NO SCALE
DESIGNED BY:	STD.	DATE:	-		

DRAWING NO. 55000

DATE REVISED	DATE FILMED	DATE REVISED	DATE FILMED	FED. ROAD DIST. NO.	STATE	FED. AID PROJ. NO.	SHEET NO.	TOTAL SHEETS
				6	ARK.			
				JOB NO.				
				1	RIPRAP & EXCAV. 55001			

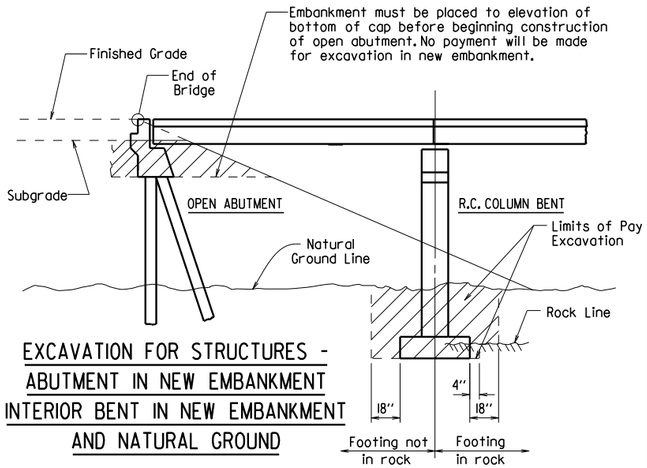

EXCAVATION FOR STRUCTURES - ABUTMENT IN NEW EMBANKMENT INTERIOR BENT IN NEW EMBANKMENT AND NATURAL GROUND

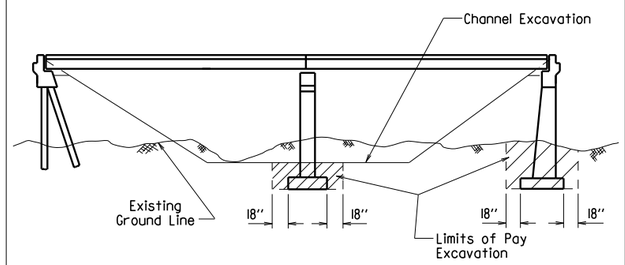

EXCAVATION FOR STRUCTURES - BRIDGE LOCATION WITH DESIGNATED CHANNEL CHANGE

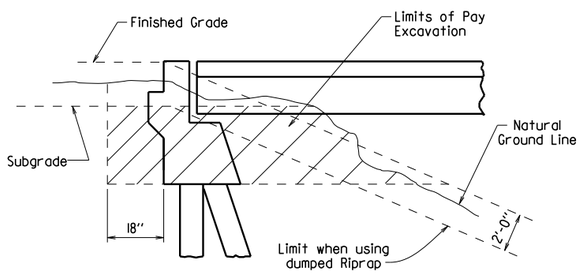

EXCAVATION FOR STRUCTURES - ABUTMENT IN NATURAL GROUND

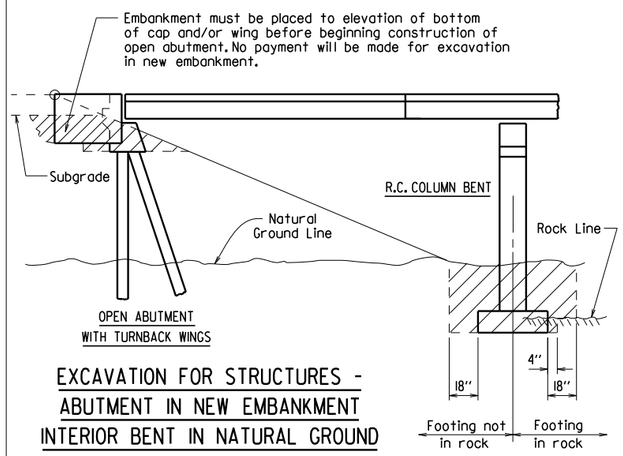

EXCAVATION FOR STRUCTURES - ABUTMENT IN NEW EMBANKMENT INTERIOR BENT IN NATURAL GROUND

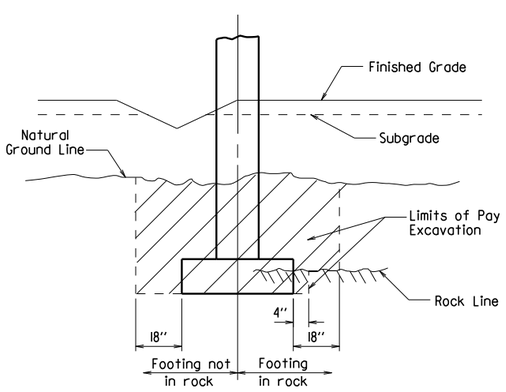

EXCAVATION FOR STRUCTURES - BENT IN ROADWAY FILL SECTION AND NATURAL GROUND

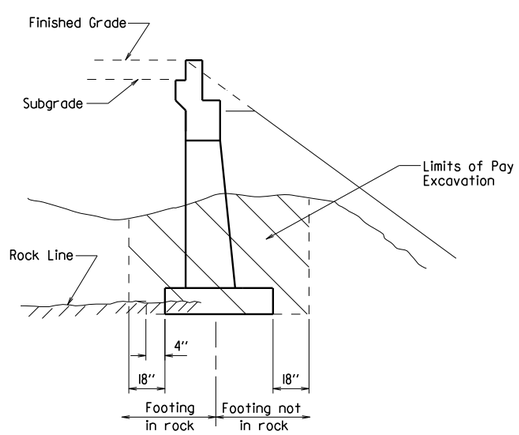

EXCAVATION FOR STRUCTURES - ABUTMENT IN NATURAL GROUND AND NEW EMBANKMENT

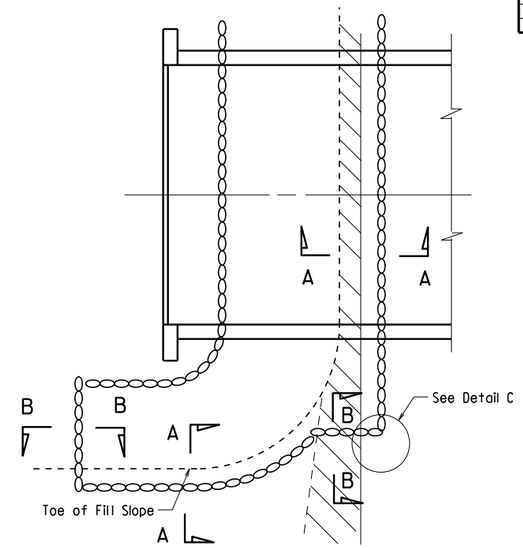

PLAN OF DUMPED RIPRAP

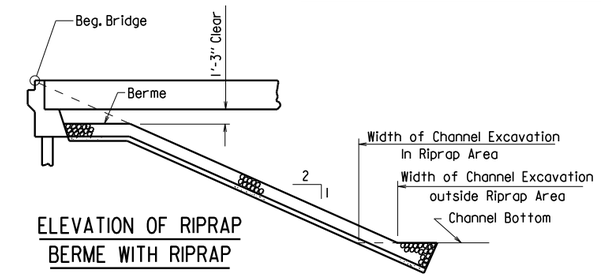

ELEVATION OF RIPRAP BERME WITH RIPRAP

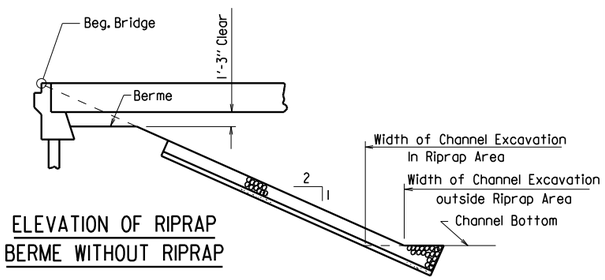

ELEVATION OF RIPRAP BERME WITHOUT RIPRAP

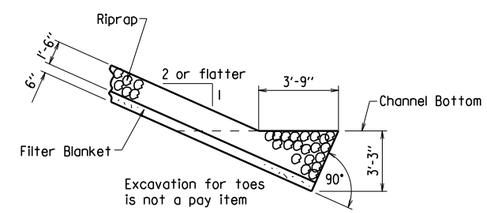

SECTION A-A

(Toe Excavation in Soil)

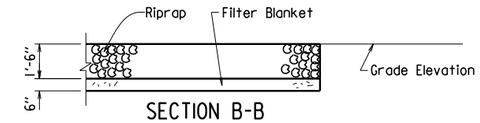

SECTION B-B

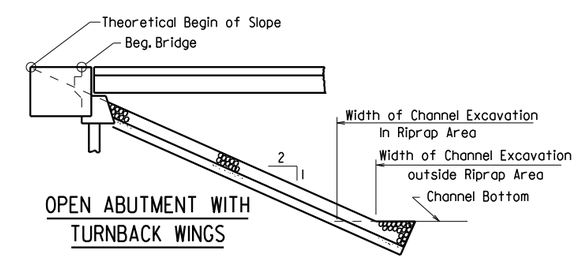

OPEN ABUTMENT WITH TURNBACK WINGS

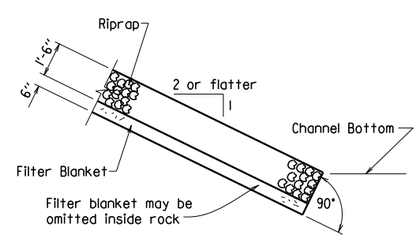

SECTION A-A

(Toe Excavation in Rock)

Note : Use this type of toe when rock is encountered which is in a stable condition.

Note : In lieu of an aggregate filter blanket, a synthetic fiber geotextile fabric complying with the requirements of Subsection 816.02(e) may be used.

Note : Details for computing excavation for structures are included for information as to how plan quantities were calculated and for use when adjusting quantities when changing footing elevation.

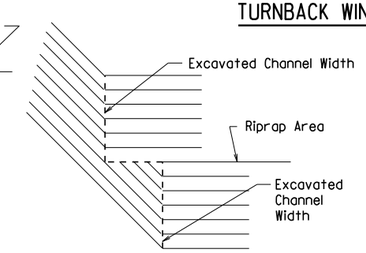

DETAIL C

STANDARD DETAILS FOR DUMPED RIPRAP AND FILTER BLANKET AND COMPUTING EXCAVATION FOR STRUCTURES

ARKANSAS STATE HIGHWAY COMMISSION

LITTLE ROCK, ARK.

DRAWN BY:	KDH	DATE:	2-27-2014	FILENAME:	b55001.dgn
CHECKED BY:	BEF	DATE:	2-27-2014	SCALE:	NO SCALE
DESIGNED BY:	STD.	DATE:			

DRAWING NO. 55001

DATE REVISED	DATE FILMED	DATE REVISED	DATE FILMED	FED. ROAD DIST. NO.	STATE	FED. AID PROJ. NO.	SHEET NO.	TOTAL SHEETS
				6	ARK.			
				JOB NO.				
				1	CONCRETE RIPRAP 55002			

Note:
Sloped surfaces of concrete riprap to be marked off into blocks (construction joints optional) with an approved grooving tool, spacing the grooved lines about 5' apart.

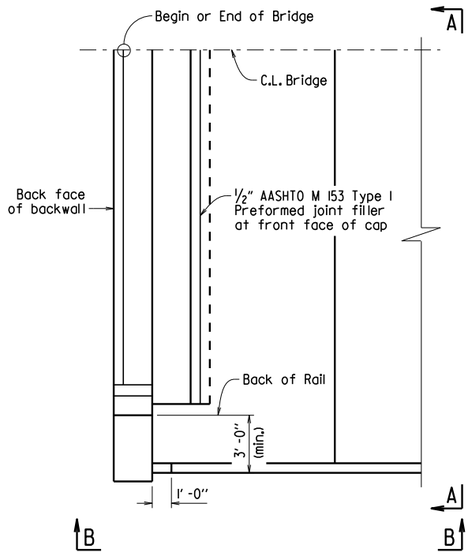

PLAN OF CONCRETE RIPRAP PERPENDICULAR TO WING
1/4" = 1'-0"

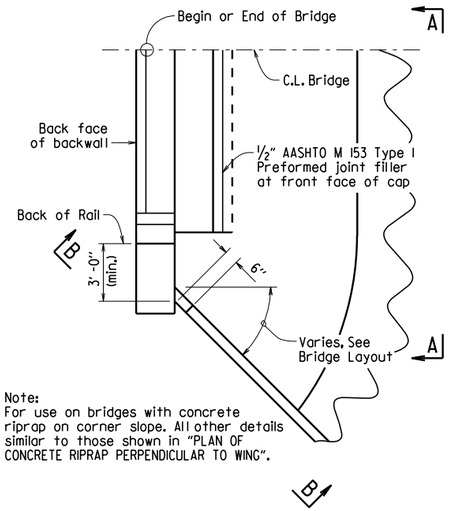

Note:
For use on bridges with concrete riprap on corner slope. All other details similar to those shown in "PLAN OF CONCRETE RIPRAP PERPENDICULAR TO WING".

PLAN OF CONCRETE RIPRAP AT ANGLE TO WING
1/4" = 1'-0"

Note:
For use on bridges with turned back wings. All other details similar to those shown in "PLAN OF CONCRETE RIPRAP PERPENDICULAR TO WING".

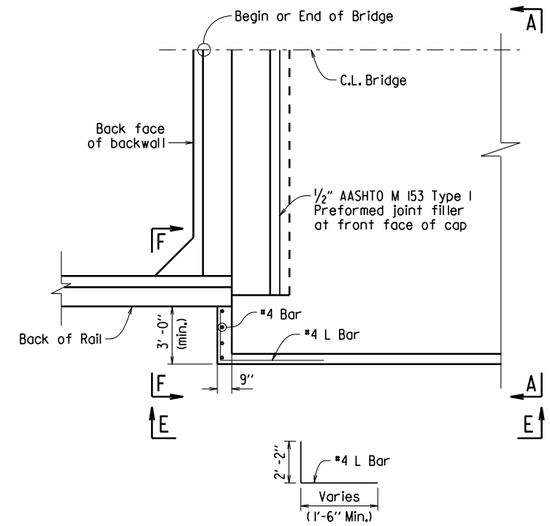

PLAN OF CONCRETE RIPRAP PERPENDICULAR TO TURNED BACK WING
1/4" = 1'-0"

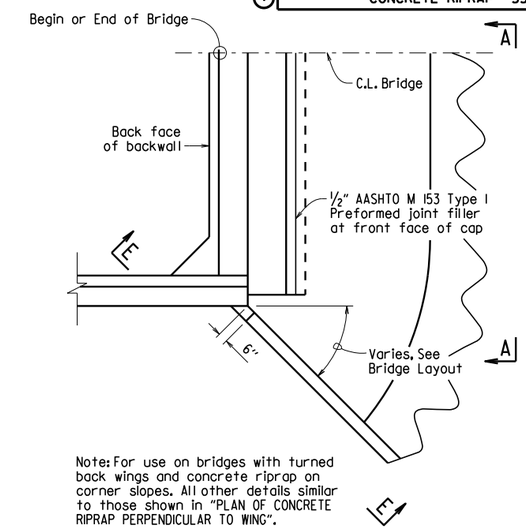

Note: For use on bridges with turned back wings and concrete riprap on corner slopes. All other details similar to those shown in "PLAN OF CONCRETE RIPRAP PERPENDICULAR TO WING".

PLAN OF CONCRETE RIPRAP AT ANGLE FROM TURNED BACK WING
1/4" = 1'-0"

Note:
Wing is shown perpendicular to concrete riprap. Details are similar when wing is at an angle to riprap.

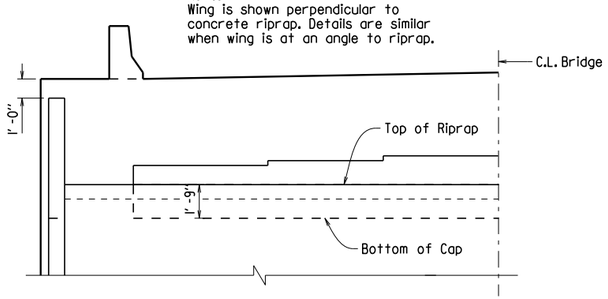

VIEW A-A
1/4" = 1'-0"

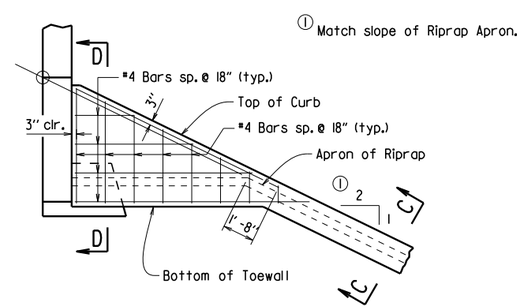

VIEW B-B
1/4" = 1'-0"

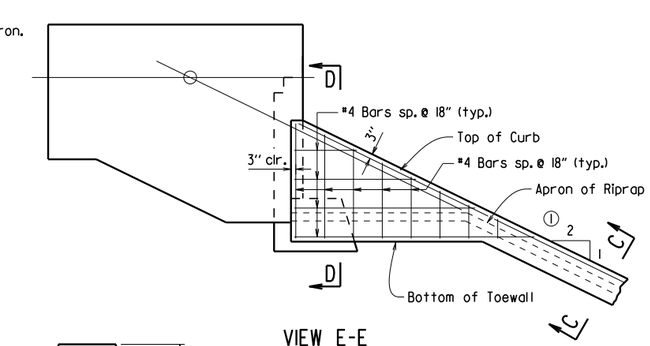

VIEW E-E
1/4" = 1'-0"

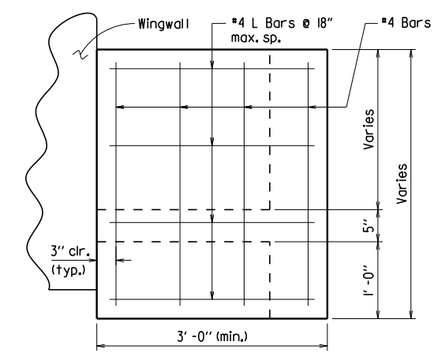

VIEW F-F
1" = 1'-0"

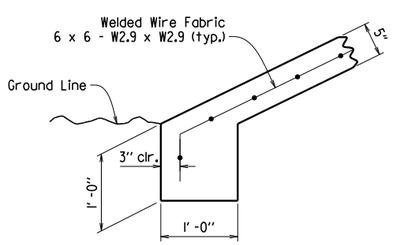

TOE OF CONCRETE RIPRAP
1" = 1'-0"

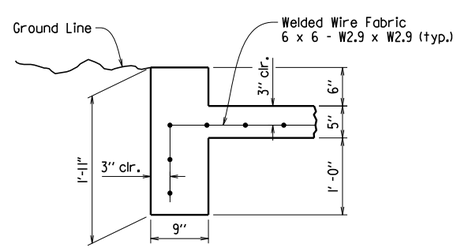

SECTION C-C
1" = 1'-0"

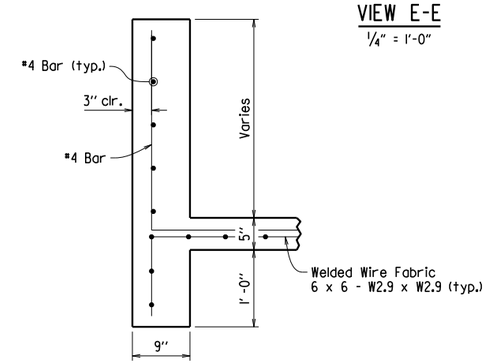

SECTION D-D
1" = 1'-0"

GENERAL NOTES

All concrete shall be Class A with a minimum compressive strength, f'c = 2,100 psi.

Welded wire fabric shall conform to AASHTO M55 or M221.

STANDARD DETAILS FOR CONCRETE RIPRAP

ARKANSAS STATE HIGHWAY COMMISSION

LITTLE ROCK, ARK.

DRAWN BY:	ACP	DATE:	2/27/2014	FILENAME:	b55002.dgn
CHECKED BY:	BEF	DATE:	2/27/2014	SCALE:	AS SHOWN
DESIGNED BY:	Std.	DATE:	---		

DRAWING NO. 55002

DATE REVISED	DATE FILMED	DATE REVISED	DATE FILMED	FED. ROAD DIST. NO.	STATE	FED. AID PROJ. NO.	SHEET NO.	TOTAL SHEETS
3/24/16				6	ARK.			
				JOB NO.				
				① BRIDGE DECK FORMS			55005	

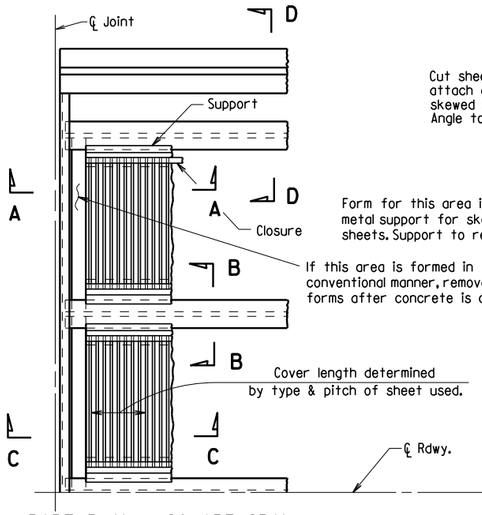

PART PLAN - SQUARE SPAN

3/8" = 1'-0"

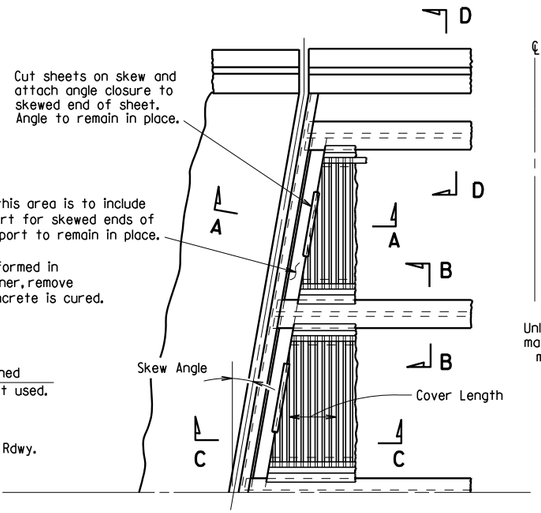

PART PLAN - SKEWED SPAN

3/8" = 1'-0"

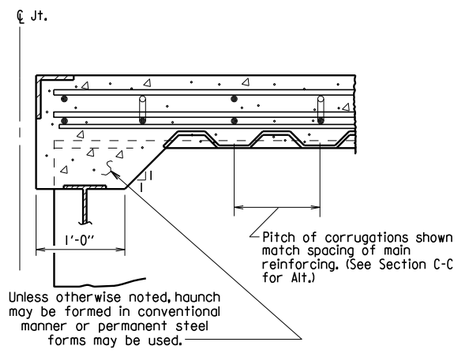

SECTION A-A

N.T.S.
(Angle at end of span)

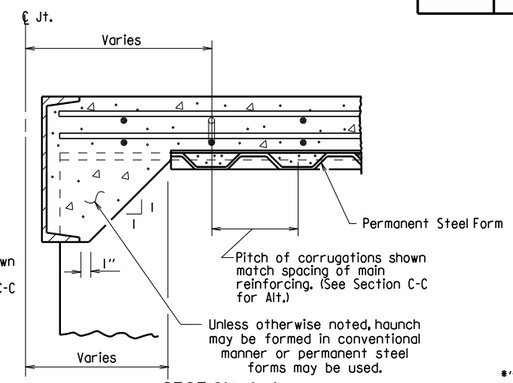

SECTION A-A

N.T.S.
(Channel at end of span)

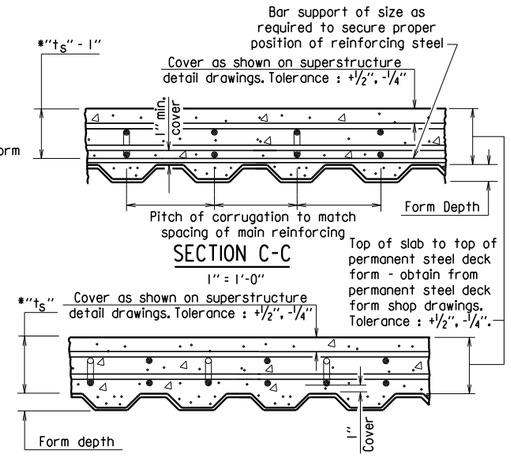

SECTION C-C

1" = 1'-0"

SECTION C-C - ALTERNATE

1" = 1'-0"
(Applicable when corrugations do not match spacing of main reinforcement)

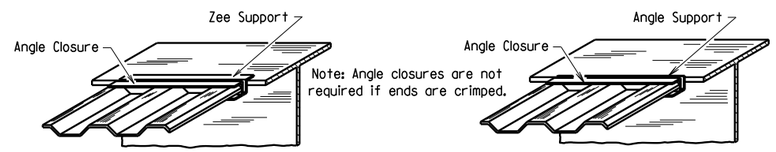

SKETCH OF PERMISSIBLE SUPPORTS

N.T.S.

$*t_s$ = slab thickness as shown on superstructure detail drawings.

GENERAL NOTES

Permanent steel deck forms may be used at the Contractor's option and shall be at no additional cost to the Department. Such use may result in changes to the dead load deflection of the girder. Any cost for adjustments due to a change in the dead load deflection will be borne by the Contractor. Payment for deck concrete and structural steel will not be increased due to use of permanent steel deck forms.

Permanent steel deck forms shall conform to Subsection 802.14(b). Detailed plans, including detailed calculations and manufacturer's technical brochure, shall be submitted to and approved by the Engineer before work of forming the bridge deck is started.

Welding of form supports to the tension flange of steel girders will be permitted only in areas where shear connectors are used. When welding is not allowed, the method of fastening Z or ∠ supports to the flange must be approved by the Engineer.

Form sheets shall be fastened to supporting members and to each other with galvanized metal screws sufficient in size and number to provide a secure attachment. Alternate methods of attachment must be approved by the Engineer.

When the pitch of form corrugations match the reinforcing spacing, transversely align form sheets across the bridge to maintain the correct orientation of continuous reinforcing bars in the corrugations.

Bar support rods, when used, shall be sized and spaced to adequately support the bottom reinforcing mat at the required position.

High chairs shall be sized to support the top mat of reinforcing at the proper position. High chairs shall be placed at locations shown on the detail drawings.

Specifications: Arkansas State Highway and Transportation Department Standard Specifications for Highway Construction (2014 Edition), with applicable Supplemental Specifications and Special Provisions.

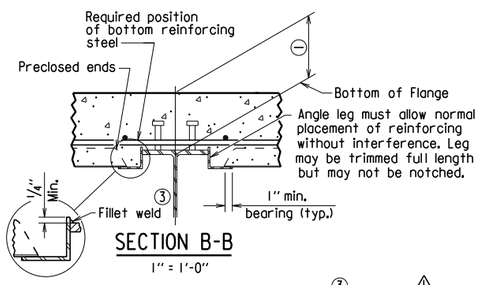

SECTION B-B

1" = 1'-0"
(Showing permissible support for tension flange where shear connectors are used, and for all compression flanges)

③ ⚠ Minimum weld: 1/8" x 1" @ 18". More weld may be required; maximum length per weld = 1 1/2" (typ.)

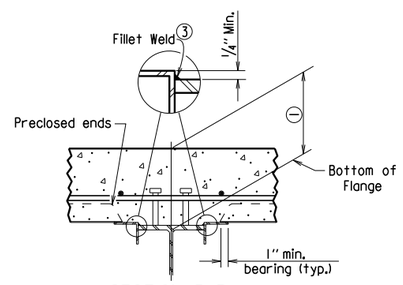

SECTION B-B

1" = 1'-0"
(Showing permissible support for tension flange where shear connectors are used and for all compression flanges)

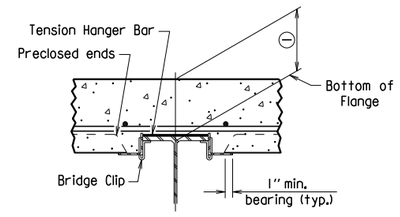

SECTION B-B

1" = 1'-0"
(Showing permissible support for tension flange where shear connectors are not used)

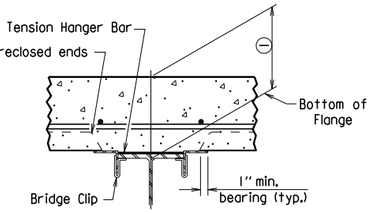

SECTION B-B

1" = 1'-0"
(Showing permissible support for tension flange where shear connectors are not used)

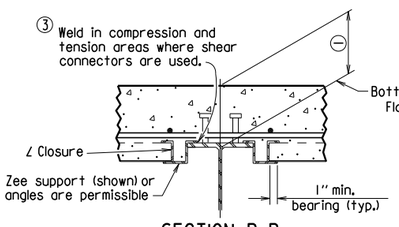

SECTION B-B

1" = 1'-0"
(Showing ∠ Closure)

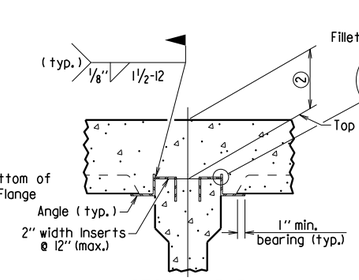

SECTION B-B
(FOR CONCRETE GIRDERS)

1" = 1'-0"
(Showing support by Insert cast in girder)

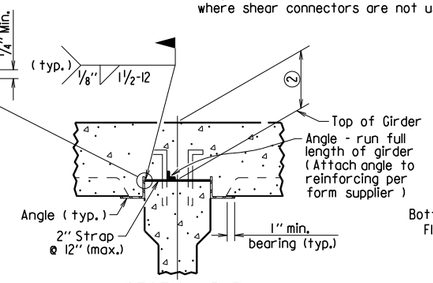

SECTION B-B
(FOR CONCRETE GIRDERS)

1" = 1'-0"
(Showing support by Strap)

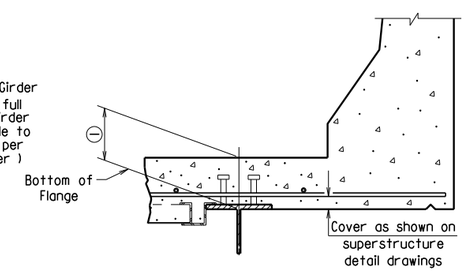

SECTION D-D

1" = 1'-0"
Note: Only Bottom Reinforcing is shown.

① Distance from top of slab to bottom of top flange as measured at centerline girder and as shown on superstructure detail drawings. This dimension may vary within the following limits to maintain the grade and slab thickness tolerances : Minimum - occurs when either the top flange or the support angle leg contacts the bottom reinforcing steel; Maximum = t_s + 1 3/4" + flange thickness. See Section C-C for slab thickness tolerance between adjacent girder flanges.

② Distance from top of slab to top of girder as measured at centerline girder and as shown on superstructure detail drawings. This dimension may vary within the following limits to maintain the grade and slab thickness tolerances : Minimum - occurs when either the top of girder or the support angle leg contacts the bottom reinforcing steel; Maximum - value shown on the superstructure detail drawings when removable forms are used. See Section C-C for slab thickness tolerance between adjacent girder flanges.

⚠ Revised weld dimension by KWY, Ck'd. by BEF, 3/24/16.

STANDARD DETAILS FOR PERMANENT STEEL BRIDGE DECK FORMS FOR STEEL & CONCRETE GIRDER SPANS

ARKANSAS STATE HIGHWAY COMMISSION

LITTLE ROCK, ARK.

DRAWN BY:	KDH	DATE:	2-27-2014	FILENAME:	b55005.dgn
CHECKED BY:	BEF	DATE:	2-27-2014	SCALE:	NONE
DESIGNED BY:	STD.	DATE:	—		

DRAWING NO. 55005

DATE REVISED	DATE FILMED	DATE REVISED	DATE FILMED	FED. ROAD DIST. NO.	STATE	FED. AID PROJ. NO.	SHEET NO.	TOTAL SHEETS
				6	ARK.			
				JOB NO.				
				1		GENERAL NOTES	55006	

GENERAL NOTES

These GENERAL NOTES are applicable unless otherwise shown in the Plan Details, Special Provisions, or Supplemental Specifications.

CONSTRUCTION SPECIFICATIONS: Arkansas State Highway and Transportation Department Standard Specifications for Highway Construction (2014 Edition) with applicable Supplemental Specifications and Special Provisions. Section and Subsection refer to the Standard Specifications.

DESIGN SPECIFICATIONS: See Bridge Layout(s).

SUPERSTRUCTURE NOTES:

MATERIALS AND STRENGTHS:

Class S(AE) Concrete	f'c =	4,000 psi
Reinforcing Steel (Gr. 60, AASHTO M 31 or M 322, Type A)	fy =	60,000 psi
Structural Steel (AASHTO M 270, Gr. 36)	Fy =	36,000 psi
Structural Steel (AASHTO M 270, Gr. 50)	Fy =	50,000 psi
Structural Steel (AASHTO M 270, Gr. 50W)	Fy =	50,000 psi
Structural Steel (AASHTO M 270, Gr. HPS70W)	Fy =	70,000 psi

See Plan Details for Grade(s) of Structural Steel required.

CONCRETE:

All concrete shall be Class S(AE) with a minimum 28 day compressive strength f'c = 4,000 psi. Concrete shall be poured in the dry and all exposed corners shall be chamfered 3/4" unless otherwise noted.

The superstructure details shown are for use when removable deck forming is used and are the basis for measurement of Class S(AE) Concrete. See Standard Drawing No. 55005 for allowable modifications and for tolerances when Permanent Steel Bridge Deck Forms are used.

Use of a longitudinal screed is not permitted on any span of a bridge deck with horizontal curvature.

The concrete deck (roadway surface) shall be given a tine finish in accordance with Subsection 802.19 for Class 5 Tined Bridge Roadway Surface Finish. Sidewalks shall receive a broomed finish as specified for final finishing in Subsection 802.19 for Class 6 Broomed Finish. Movement of the finishing machine across new concrete shall be on planks placed on the surface and shall be prohibited for 72 hours after finishing the pour. Sufficient concrete must be placed ahead of the strike-off to fully load the beam or girder. When permitted, the use of a longitudinal strike-off will require that a vertical camber adjustment be made in the strike-off to account for the future dead load deflection due to any railings, median barrier, and sidewalks.

REINFORCING STEEL:

All reinforcing steel shall be Grade 60 conforming to AASHTO M 31 or M 322, Type A, with mill test reports and shall be epoxy coated. The reinforcing steel is to be accurately located in the forms and firmly held in place by steel wire supports, sufficient in number and size to prevent displacement during the course of construction. The wire supports will not be paid for directly, but will be considered subsidiary to the item "Epoxy Coated Reinforcing Steel (Grade 60)".

STRUCTURAL STEEL (COMMON TO W-BEAMS AND PLATE GIRDERS):

Structural steel shall be AASHTO M 270 with grade and payment as specified in the plans. Grade 50W steel shall not be painted and all exposed surfaces shall be cleaned in accordance with Subsection 807.84(e). Grade 36 and Grade 50 steel shall be painted unless otherwise noted and all exposed surfaces shall be cleaned in accordance with Subsection 807.84. Structural steel completely embedded in concrete may be AASHTO M 270, Gr. 36, Gr. 50 or Gr. 50W unless otherwise noted.

Drawings show general features of design only. Shop drawings shall be made in accordance with the specifications, submitted and approval secured before fabrication is begun.

Requests for substitution of structural steel shapes shown with shapes of greater size must be submitted by the Contractor to the Engineer for approval. Steels of equal or greater strengths will be accepted only when shown on the approved shop drawings. Payment will be based on the basis of shapes and materials shown in the plans, and no additional compensation will be made for any adjustments due to substitutions.

All welding that is to be done during fabrication of structural steel, including temporary welds, shall be detailed on the shop drawings and submitted for approval. If additional welds are required, whether permanent or temporary, a formal request with detailed drawings shall be submitted to the Engineer for approval; however, additional welds used for attaching falsework support devices or screed rail supports to the structural steel that do not exceed the limitations of Subsection 802.13 will not require approval prior to construction. All welding shall conform to Subsection 807.26.

Unless otherwise noted, field connections shall be bolted with 3/4" ø high-strength bolts using 13/16" ø open holes. Holes for 3/4" ø high-strength bolts may be 15/16" ø if a washer is supplied for use under both the nut and head of the bolt. The use of oversized holes will not be allowed on main members unless otherwise noted. Bolts shall be placed with heads on the outside face of the exterior beam or girder webs and on the bottom of the beam or girder flanges.

All stud shear connectors shall be granular flux filled, solid fluxed, or equal and shall be automatically end welded in accordance with recommendations of the Manufacturer.

When painting is required, all structural steel except galvanized steel and steel completely encased in concrete shall be painted in accordance with Subsection 807.75. The color of paint shall be as specified in the plans.

STRUCTURAL STEEL (W-BEAMS):

All beams and field splice plates, and all diaphragms and connection plates attached to horizontally curved beams are considered main load carrying members and shall meet the Longitudinal Charpy V-Notch Test specified in Subsection 807.05. This work and material will not be paid for directly, but shall be considered subsidiary to the item "Structural Steel in Beam Spans (M 270, Gr. ___)".

All beams in continuous units and simple spans with field splices shall be blocked in their true position in the shop in groups as specified in Subsection 807.54(b)(2) with the webs horizontal. The camber, length of sections, distance between bearings, and openings of joints shall be measured and this information shall become part of the permanent records. The component parts shall be match marked in this assembly and these marks shall be shown on the erection diagram.

All beams in simple spans without field splices shall be blocked in their true position with webs horizontal. The camber, distance between bearings, and openings of joints shall be measured and this information shall become part of the permanent records.

Flange field splice plates shall be cut and fabricated so that the primary direction of rolling is parallel to the direction of the main tensile and/or compressive stresses.

All beam dimensions are based on a temperature of 60 degrees F. A tolerance of 1/4" +/- is allowed for camber.

Bent plate diaphragms for horizontally curved beams shall be cut and fabricated so that the primary direction of rolling is parallel to the direction of the main tensile and/or compressive stresses. Bent plate diaphragms for straight beams may be cut and fabricated in accordance with Subsection 807.35 or as required for horizontally curved beams.

Unless otherwise noted, diaphragms shall be installed as beams are erected. All bolts in diaphragms and field splices shall be installed and tightened in accordance with Subsection 807.71 prior to pouring the concrete deck.

STRUCTURAL STEEL (PLATE GIRDERS):

All references to cross-frames shall include "X" or "K" types.

All girder web and flange plates, all field splice plates, and all diaphragms, cross-frames and connection plates attached to horizontally curved girders are considered main load carrying members and shall meet the Longitudinal Charpy V-Notch Test specified in Subsection 807.05. This work and material will not be paid for directly, but shall be considered subsidiary to the item "Structural Steel in Plate Girder Spans (M 270, Gr. ___)".

All girders in continuous units and simple spans with field splices shall be assembled in the shop as specified in Subsection 807.54(b)(2) and blocked in their true position with webs horizontal. The camber, length of sections, distance between bearings, and openings of joints shall be measured and this information shall become part of the permanent records. The component parts shall be match marked in this assembly and these marks shall be shown on the erection diagram.

All girders in simple spans without field splices shall be blocked in their true position with webs horizontal. The camber, distance between bearings, and openings of joints shall be measured and this information shall become part of the permanent records.

Web and flange plates for main members and flange splice plates for main members shall be cut and fabricated so that the primary direction of rolling is parallel to the direction of the main tensile and/or compressive stresses.

Girder webs may be made by shop splicing with minimum lengths of 25 feet for sections. Flange plates longer than 50 feet may be made by shop splicing with minimum lengths of 25 feet for sections. No additional payment will be made for shop welded splices.

All girder dimensions are based on a temperature of 60 degrees F. A tolerance of 1/4" +/- is allowed for camber.

Groove welds in web and flange plates shall be Quality Control (Q.C.) tested by nondestructive testing, as required in Subsection 807.23(b). Fillet welds at flange to web plate connections shall be Q.C. tested by the magnetic particle method. All Q.C. testing shall be considered subsidiary to the item "Structural Steel in Plate Girder Spans (M 270, Gr. ___)".

Bent plate diaphragms for horizontally curved girders shall be cut and fabricated so that the primary direction of rolling is parallel to the direction of the main tensile and/or compressive stresses. Bent plate diaphragms for straight girders may be cut and fabricated in accordance with Subsection 807.35 or as required for horizontally curved girders.

Unless otherwise noted, cross-frames and diaphragms shall be installed as girders are erected. All bolts in cross-frames, diaphragms, and field splices shall be installed and tightened in accordance with Subsection 807.71 prior to pouring the concrete deck.

SUBSTRUCTURE NOTES:

CONCRETE:

Unless otherwise noted, concrete in caps, columns and footings (except seal footings) shall be Class "S" with a minimum 28 day compressive strength f'c = 3,500 psi and shall be poured in the dry. Seal Concrete for footings shall have a minimum 28 day compressive strength f'c = 2,100 psi.

Concrete in drilled shafts shall be Class "S" as modified by Job SP "Drilled Shaft Foundations".

All exposed corners shall be chamfered 3/4" unless otherwise noted.

REINFORCING STEEL:

All reinforcing steel shall be Grade 60 (yield strength = 60,000 psi) conforming to AASHTO M 31 or M 322, Type A, with mill test reports.

Top reinforcing bars in cap shall be properly placed to avoid interference with anchor bolts or sheet metal sleeves.

STRUCTURAL STEEL:

Structural steel in end bents shall be AASHTO M 270 with grade and payment as specified in the plans.

FOR ADDITIONAL INFORMATION AND NOTES, SEE LAYOUT(S) AND PLAN DETAILS.

STANDARD GENERAL NOTES
FOR STEEL BRIDGE STRUCTURES

ARKANSAS STATE HIGHWAY COMMISSION
LITTLE ROCK, ARK.

DRAWN BY:	A.M.S.	DATE:	9-2-2015	FILENAME:	b55006.dgn
CHECKED BY:	B.E.F.	DATE:	9-2-2015	SCALE:	NO SCALE
DESIGNED BY:	STD.	DATE:			

DRAWING NO. 55006

PRINT DATE: 11/7/2019

DATE REVISED	DATE FILMED	DATE REVISED	DATE FILMED	FED. ROAD DIST. NO.	STATE	FED. AID PROJ. NO.	SHEET NO.	TOTAL SHEETS
				6	ARK.			
				JOB NO.				
				1	STEEL BRIDGE STRUCTURES 55007			

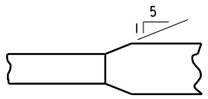

Plan-Unequal Width (Flg.)

FLANGE SPLICE

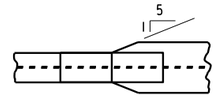

FLANGE SPLICE AT UNEQUAL BOTTOM FLANGE WIDTHS

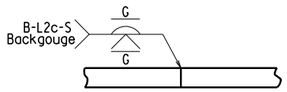

Equal Thickness

WEB & FLANGE SPLICE

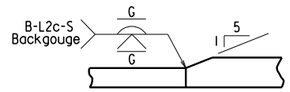

Unequal Thickness

FLANGE SPLICE

(Use when Base Metal Thickness is Equal to or Less than 2")

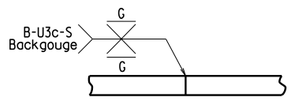

Equal Thickness

WEB & FLANGE SPLICE

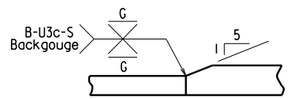

Unequal Thickness

FLANGE SPLICE

(Use when Base Metal Thickness is Greater than 2")

DETAILS OF WELDED SPLICES FOR PLATE GIRDERS

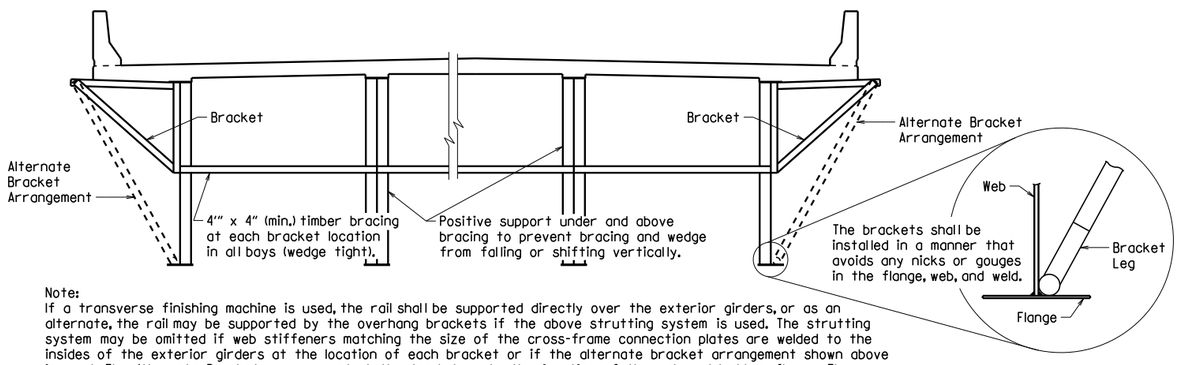

Note:
If a transverse finishing machine is used, the rail shall be supported directly over the exterior girders, or as an alternate, the rail may be supported by the overhang brackets if the above strutting system is used. The strutting system may be omitted if web stiffeners matching the size of the cross-frame connection plates are welded to the insides of the exterior girders at the location of each bracket or if the alternate bracket arrangement shown above is used. The Alternate Bracket arrangement shall extend down to the junction of the web and bottom flange. The stiffener shall conform to the details for cross frame connection plates shown on the plans. No direct payment will be made for brackets, timber bracing, supports, or welded stiffeners. Payment shall be subsidiary to "Structural Steel in Plate Girder Spans (____)".

SCREED RAIL SUPPORT FOR PLATE GIRDERS

(USE WHEN WEB DEPTHS ARE 48" OR GREATER)

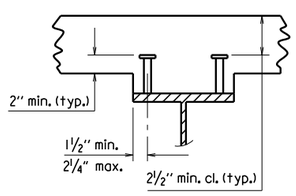

2 STUDS PER ROW

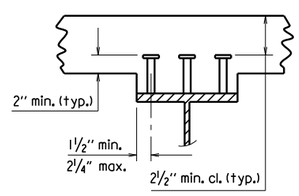

3 STUDS PER ROW

Stud Shear Connectors shall be automatically end welded to the beam or girder flange in accordance with the recommendations of the Manufacturer. See plan details for number and size.

SHEAR CONNECTOR DETAIL

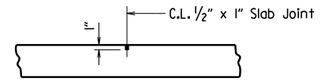

Use Type 3 or 4 Joint Sealer. See Subsections 501.02(h) and 501.05(j). Backer Rod filler will not be required. Joint Sealer shall be measured and paid for as Class S(AE) Concrete-Bridge. Slab Joints shall extend to the outside edge of the deck slab and shall align with open joints at the front face of the parapet. Slab joints shall be installed before the parapet railing is poured. If slab joints are to be sawed, they shall be sawed as soon as the concrete has sufficiently set to allow sawing of the joint without damage to the slab. Slab joints shall be placed at all pouring sequence construction joints and required slab joint locations. The joint sealer shall extend across the deck from gutterline to gutterline.

ADDITIONAL NOTES IF SIDEWALKS OR RAISED MEDIANS ARE REQUIRED:
Slab Joints shall be installed before the sidewalk or raised median is poured. After installation of the joint in the sidewalk or raised median and prior to pouring the parapet rail, the joint sealer shall be placed extending across the deck slab from gutterline to gutterline and acrosss the top of the sidwalk or raised median to the edge of the slab. No joint sealer shall be placed on the deck slab under the sidewalk or raised median.

TRANSVERSE SLAB JOINT DETAIL

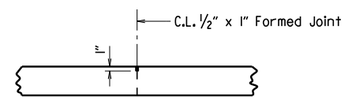

Use ½" x 1" Type 3 or 4 Joint Sealer. See Subsections 501.02(h) and 501.05(j). Backer Rod filler will not be required. Joint sealer shall be measured and paid for as Class S(AE) Concrete-Bridge. This joint shall be formed. Seal color shall be gray or other color similar to concrete.

LONGITUDINAL CONSTRUCTION JOINT

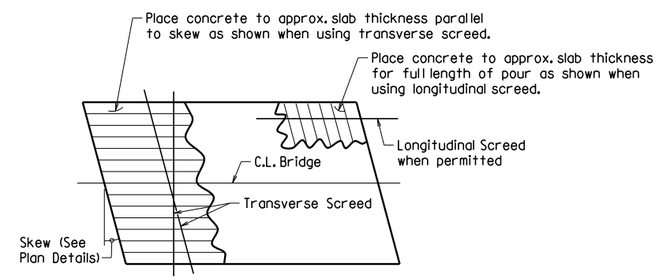

Note: At the Contractor's option, the transverse screed may be placed parallel to the skew or perpendicular to C.L. Bridge.

CONCRETE PLACEMENT PROCEDURE FOR BRIDGES WITH SKEW

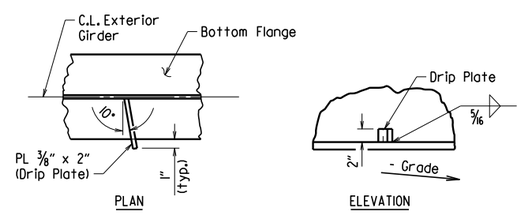

Drip Plate to be welded to the outer side of the bottom flange of the exterior girders.

Locate drip plate 5'-0" from C.L. Bearing on high side of each Bent, unless otherwise noted in the plans.

BOTTOM FLANGE DRIP PLATE

(USE WHEN WEB DEPTHS ARE 54" OR GREATER AND UNIT OR SPAN IS NOT IN LEVEL GRADE)

t_s = slab thickness. See "Typical Roadway Section" in the plans.

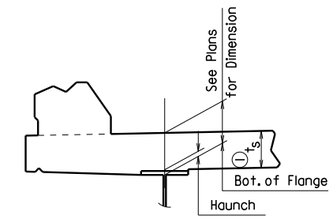

EXTERIOR BEAM OR GIRDER

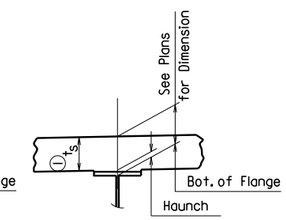

INTERIOR BEAM OR GIRDER

(1) Tolerance when removable deck forming is used is + ½", - ¼". Haunch forming is required and shall be adjusted to maintain slab thickness tolerance.

NOTES:
Haunch dimension may vary within the following limits to maintain the grade and slab thickness tolerance: Minimum occurs when top flange contacts bottom reinforcing steel; Maximum = top flange thickness plus 1¾" unless otherwise noted in the plans. No increase in concrete and structural steel quantities will be made to maintain tolerances.

Tolerances shown are applicable only when removable deck forming is used. See Std. Dwg. No. 55005 for tolerances when permanent steel deck forms are used. Payment for concrete shall be based on removable deck forming.

ADJUSTMENT FOR SLAB THICKNESS TOLERANCE

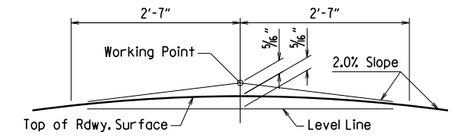

NOTE: Working Point matches Theoretical Roadway Grade.

ROUNDING DETAIL

BRIDGES IN NORMAL CROWN

WELD TABLE

Material Thickness of Thicker Part Joined (Inches)	Minimum Size of Fillet Weld (Inches)	Single Pass Weld Must Be Used
To ¾" Inclusive	¼"	
Over ¾"	5/16"	

NOTE: When a fillet weld size, as shown on the plans, is larger than the minimum, the first pass shall be that specified for minimum size of fillet weld.

SECTION AND SUBSECTION REFER TO THE ARKANSAS STATE HIGHWAY AND TRANSPORTATION DEPARTMENT STANDARD SPECIFICATIONS FOR HIGHWAY CONSTRUCTION (2014 EDITION).

THESE DETAILS ARE APPLICABLE UNLESS OTHERWISE SHOWN IN THE PLAN DETAILS, SPECIAL PROVISIONS, OR SUPPLEMENTAL SPECIFICATIONS.

STANDARD DETAILS FOR STEEL BRIDGE STRUCTURES

ARKANSAS STATE HIGHWAY COMMISSION

LITTLE ROCK, ARK.

DRAWN BY:	JYP	DATE:	2/11/2016	FILENAME:	b55007.dgn
CHECKED BY:	AMS	DATE:	2/11/2016	SCALE:	No Scale
DESIGNED BY:	STD.	DATE:	—		

DRAWING NO. 55007

DATE REVISED	DATE FILMED	DATE REVISED	DATE FILMED	FED. ROAD DIST. NO.	STATE	FED. AID PROJ. NO.	SHEET NO.	TOTAL SHEETS
				6	ARK.			
				JOB NO.				
				1	POURED SILICONE JOINT			55008

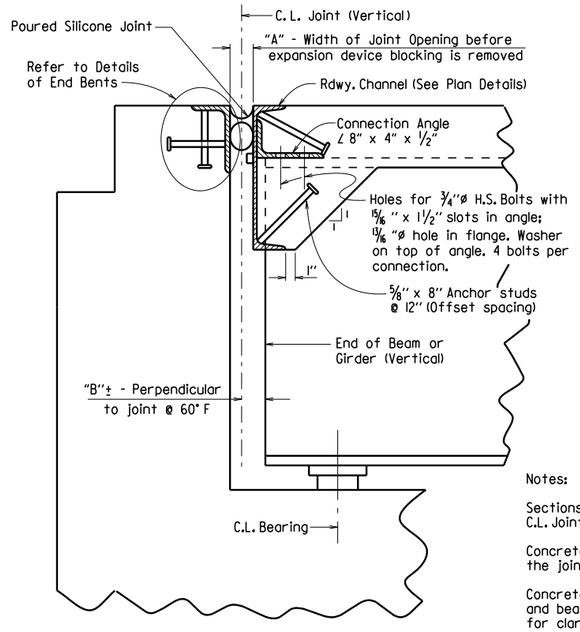

SECTION THRU JOINT AT END BENT

Notes:

Sections are taken perpendicular to C.L. Joint.

Concrete shall be hand packed under the joint armor.

Concrete diaphragms, steel diaphragms and bearing stiffeners are not shown for clarity. See plans for details.

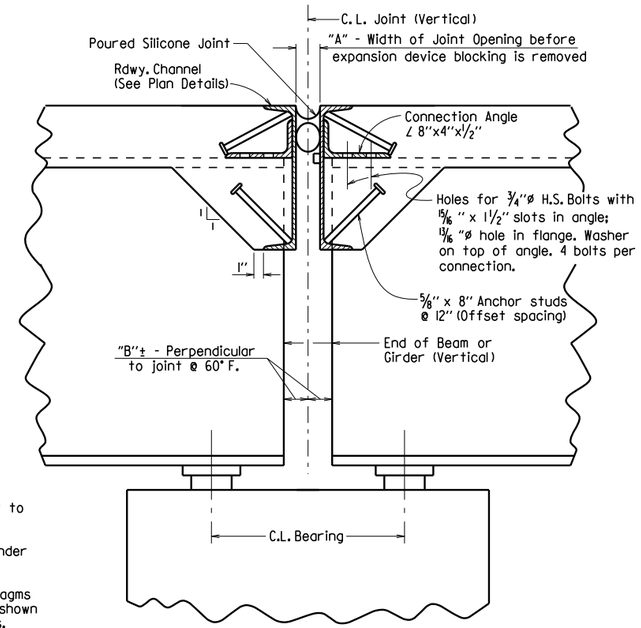

SECTION THRU JOINT AT INTERMEDIATE BENT

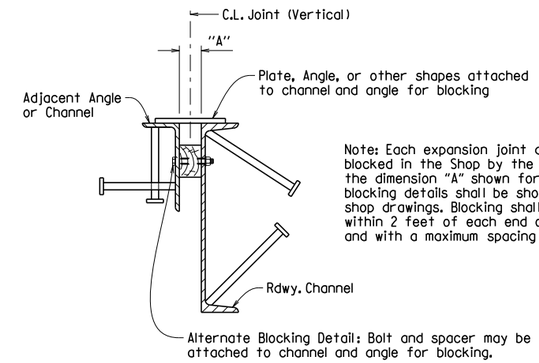

Note: Each expansion joint device shall be blocked in the Shop by the Fabricator to the dimension "A" shown for 60° F and the blocking details shall be shown on the shop drawings. Blocking shall be placed within 2 feet of each end of the device and with a maximum spacing of 8 feet.

DETAILS FOR BLOCKING EXPANSION JOINT DEVICE

EXPANSION DEVICE INSTALLATION AT END BENTS:

The Contractor may elect to install the expansion device using one of the following two alternatives:

1) The concrete span pour adjacent to joint shall be placed before the end bent backwall is placed. After the end bent backwall forms are in place and the beams or girders erected, the blocked expansion device shall be installed and adjusted for grade. All connection bolts shall be fully tightened prior to placing the deck concrete adjacent to the bent. Immediately prior to pouring the backwall concrete, the blocking shall be removed, and the opening adjusted for temperature and grade.

2) The backwall shall be poured to the optional construction joint after beams or girders are erected. The blocked expansion device shall be installed and adjusted for grade. All connection bolts shall be fully tightened prior to placing the deck concrete adjacent to the bent. Immediately prior to pouring the remainder of the backwall concrete, the blocking shall be removed and the opening adjusted for temperature and grade.

EXPANSION DEVICE INSTALLATION AT INTERMEDIATE BENTS:

After all beams or girders on each side of the joint are erected the blocked expansion device shall be installed and adjusted for grade. Deck concrete shall be placed for the entire unit or span on one side of the joint before deck concrete on the other side is placed. Connection bolts for the first side to have deck concrete placed shall be completely bolted. Bolts on the other side shall be loosely installed so that thermal and rotational movements will not be restricted during concrete placement on the first side.

Connection bolts on the second side shall remain loose until the concrete pour adjacent to the joint is to be placed. Immediately prior to pouring the span concrete on the second side, the blocking shall be removed, the joint adjusted for temperature and grade, and the connection bolts tightened.

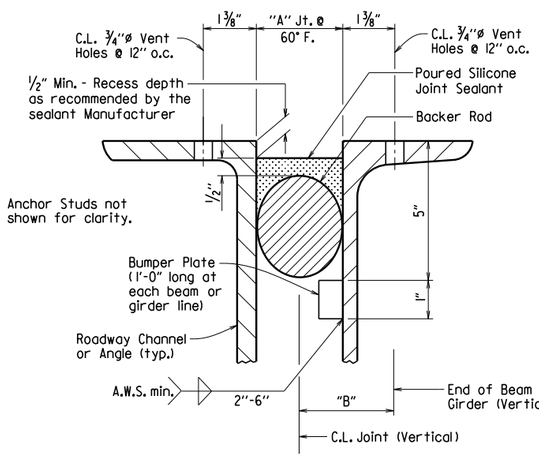

DETAIL OF POURED SILICONE JOINT

Silicone joint material and installation shall conform to Section 809. The temperature limitations recommended by the sealant Manufacturer shall be observed. The sealant shall be installed only when the average 24 hour air temperature is between 40° and 80° F.

Use an appropriately sized backer rod at the depth shown in the Manufacturer's literature based on the joint width at the time of sealing. Unless otherwise noted, do not install more backer rod than can be sealed in the same day.

The Contractor shall verify separation of the backer rod from the joint material after the joint material has set.

When bridge deck is constructed in stages, backer rods shall be extended beyond length of poured joint in initial construction stage so that the two pieces can be properly spliced together prior to installing sealant in subsequent stages. Manufacturer's recommendations shall be followed to prevent sealant from "running out of joint" during stage construction.

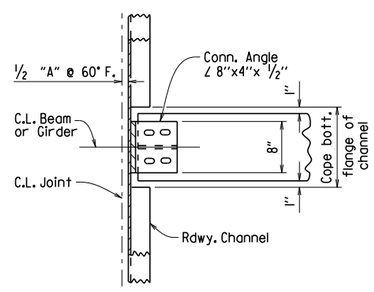

CHANNEL CONNECTION DETAIL

BENTS WITHOUT SKEW

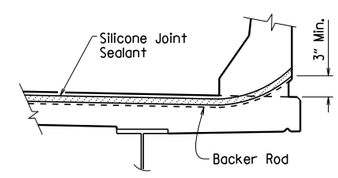

JOINT SEAL PLACEMENT AT RAIL

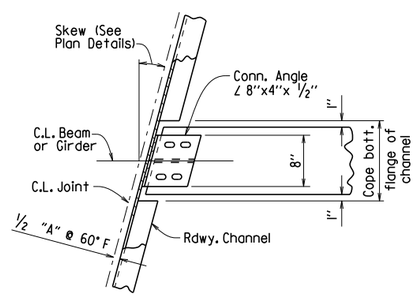

CHANNEL CONNECTION DETAIL

BENTS WITH SKEW

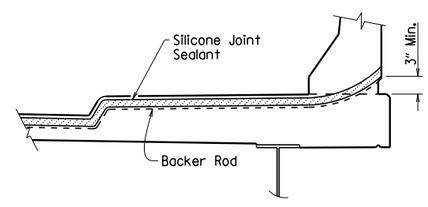

JOINT SEAL PLACEMENT AT SIDEWALK

SECTION AND SUBSECTION REFER TO THE ARKANSAS STATE HIGHWAY AND TRANSPORTATION DEPARTMENT STANDARD SPECIFICATIONS FOR HIGHWAY CONSTRUCTION (2014 EDITION).

THESE DETAILS ARE APPLICABLE UNLESS OTHERWISE SHOWN IN THE PLAN DETAILS, SPECIAL PROVISIONS, OR SUPPLEMENTAL SPECIFICATIONS. SEE "TABLE OF SILICONE JOINT DATA" IN PLAN DETAILS FOR VARIABLES "A" AND "B", AND BUMPER PLATE SIZE.

STANDARD DETAILS FOR POURED SILICONE JOINTS

ARKANSAS STATE HIGHWAY COMMISSION

LITTLE ROCK, ARK.

DRAWN BY:	A.C.P.	DATE:	2/11/2016	FILENAME:	b55008.dgn
CHECKED BY:	A.M.S.	DATE:	2/11/2016	SCALE:	No Scale
DESIGNED BY:	STD.	DATE:	—		

DRAWING NO. 55008

DATE REVISED	DATE REVISED	FED. RD. DIST. NO.	STATE	JOB NO.	SHEET NO.	TOTAL SHEETS
4-14-23		6	ARK.			
		TYPE D NAME PLATE - 55010				

The name of the bridge as shown on the plans shall be placed on Lines 1 & 2 using ⅛" raised letters and numerals ⅜" high.

	Example 1	Example 2	Example 3	Example 4
Line 1	RED RIVER	SOUTHERN RAILROAD	SALINE RIVER	HIGHWAY 5
Line 2	RELIEF	OVERPASS	RELIEF	

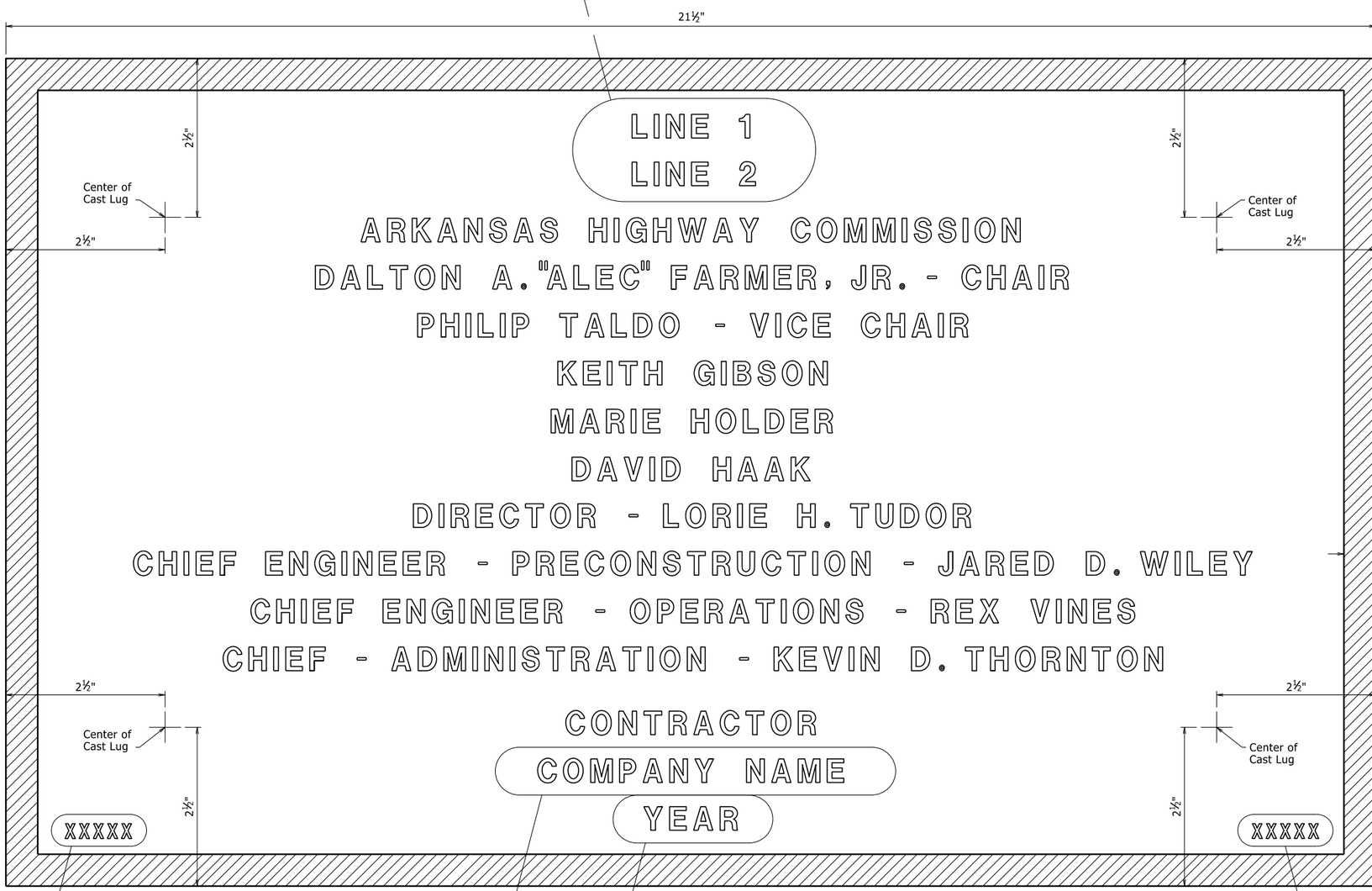

TYPICAL BRIDGE NAME PLATE

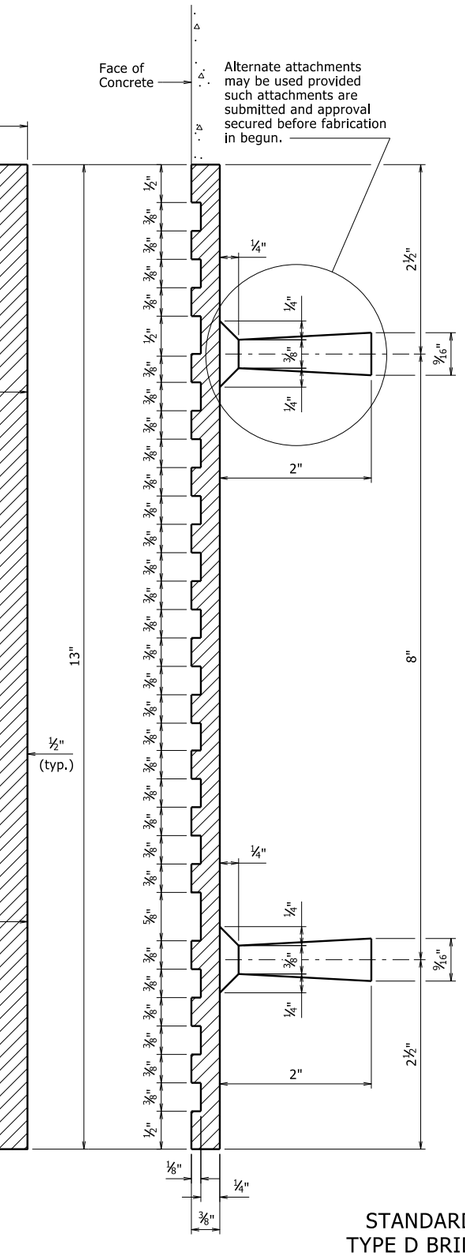

GENERAL NOTES

Specifications: Arkansas State Highway and Transportation Department Standard Specifications for Highway Construction, (2014 Edition) with applicable Supplemental Specifications and Special Provisions.

Name plates shall be cast bronze and shall meet the material requirements as specified in Section 812.

Body of plate shall be ¼" thick and shall include four tapering cone lugs ⅜" to 9/16" x 2" long. The border and all lettering shall be raised ⅛" above the face of plate and shall be polished.

All lettering shall be plain gothic, square cut and not tapered.

The number of plates required and the location and name on the plate for each bridge shall be as designated on the plans.

1 Revised and Redrawn
4-14-23 CGP Checked By: CRE

STANDARD DETAILS FOR
TYPE D BRIDGE NAME PLATE

ROUTE SEC.

ARKANSAS STATE HIGHWAY COMMISSION
LITTLE ROCK, ARK.

DRAWN BY: KDH DATE: 2-27-2014 FILENAME: b55010.dgn
CHECKED BY: BEF DATE: 2-27-2014 SCALE: NO SCALE
DESIGNED BY: STD. DATE:

DRAWING NO. 55010

PRINT DATE: 4/20/2023

DATE REVISED	DATE FILMED	DATE REVISED	DATE FILMED	FED. ROAD DIST. NO.	STATE	FED. AID PROJ. NO.	SHEET NO.	TOTAL SHEETS
				6	ARK.			
				JOB NO.				

1 TRANSITIONAL RAIL - 55013A

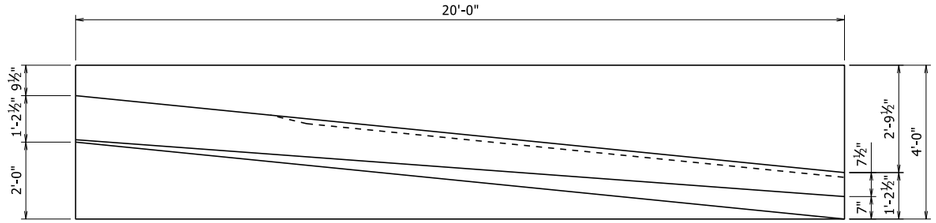

PLAN OF TRANSITIONAL APPROACH RAILING

Railings on each side of roadway are opposite hand to each other

½" = 1'-0"

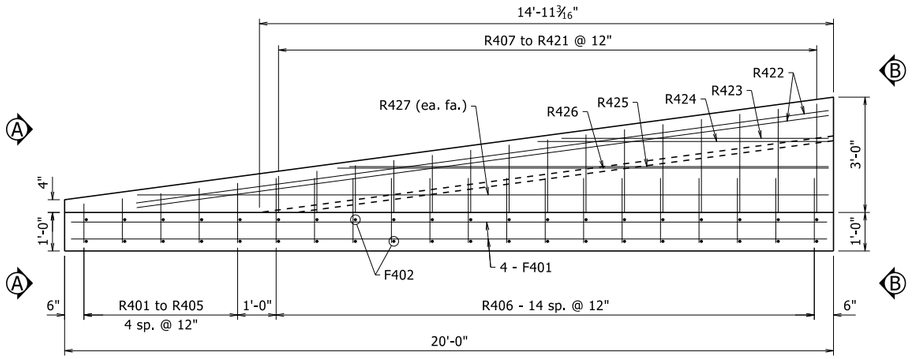

ELEVATION OF TRANSITIONAL APPROACH RAILING

½" = 1'-0"

1 Recess height varies as shown from 2'-0" to 0".

2 Eliminate recess when formliner with architectural finish is used. See Plans for additional Information.

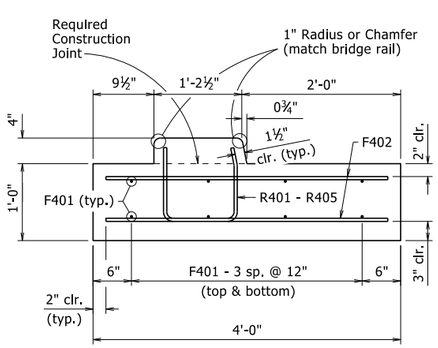

VIEW A-A

1" = 1'-0"

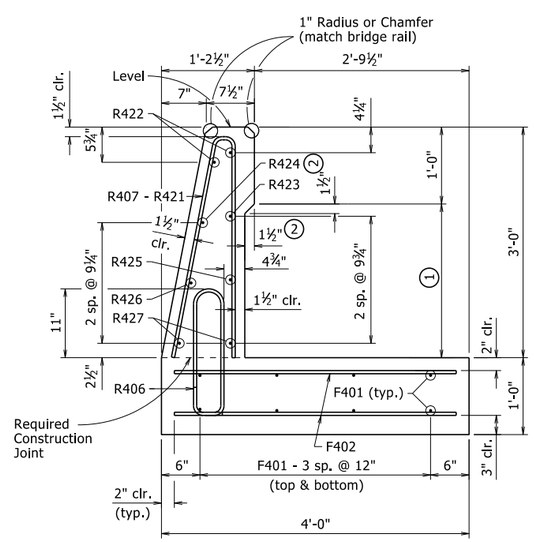

VIEW B-B

1" = 1'-0"

GENERAL NOTES

Transitional Approach Railing Type SSTR36 shall be placed at locations shown in plans.

All concrete shall be Class "S" with a minimum 28 day compressive strength f'c = 3,500 psi and shall be poured in the dry. All exposed corners to be chamfered 1" unless otherwise noted.

All reinforcing steel shall be Grade 60 conforming to AASHTO M 31 or M 322, Type A, with mill test reports.

All longitudinal lines within the limits of horizontal curves shall be on curves concentric to C.L. Construction. Adjustment to longitudinal bar lengths may be required. Transverse reinforcing shall be placed on radial lines to C.L. Construction.

Unless otherwise required in the plans, curing and finishing shall be in accordance with Subsection 806.05(c) and the surface finish type and areas of application shall match that used on the adjacent bridge railing or barrier wall. See Subsection 802.19(3) for Class 3 Textured Coating Finish or Subsection 803.03(a) or 803.03(b) for Class 1 or 2 Protective Surface Treatment, respectively. Surface finishes shall not be paid for directly, but shall be considered incidental to the unit price bid for "Transitional Approach Railing."

When alternate surface and/or architectural finishes are specified in the plans, no direct payment will be made, and the alternate finish shall be considered incidental to the unit price bid for "Transitional Approach Railing". See plan details for additional Information when architectural finishes are specified.

Transitional Approach Railing Type SSTR36 shall be paid for at the contract unit price bid for "Transitional Approach Railing". See Section 806 for additional information.

Scales shown are for 22"x34" drawings. When using 11"x17" drawings, reduce scale by one half.

BAR LIST - ONE TRANSITIONAL APPROACH RAILING

MARK	NO. REQ'D	LENGTH	P.D.
F401	8	19'-8"	Str.
F402	40	3'-8"	Str.
R401 to R405	1 ea.	2'-10" - 3'-11"	2"
R406	15	4'-5"	2"
R407 to R421	1 ea.	2'-5" - 5'-9"	2"
R422	2	18'-2"	Str.
R423	1	6'-11"	Str.
R424	1	7'-6"	Str.
R425	1	12'-6"	Str.
R426	1	12'-9"	Str.
R427	2	17'-11"	Str.

BENDING DIAGRAMS

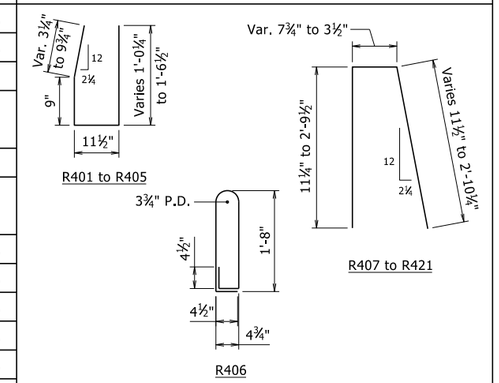

Dimensions are out to out of bars.

FOR INFORMATION ONLY
SCHEDULE OF QUANTITIES PER RAIL UNIT

CLASS "S" CONCRETE	REINFORCING STEEL (GRADE 60)	CLASS 1 PROTECTIVE SURFACE TREATMENT	CLASS 2 PROTECTIVE SURFACE TREATMENT	CLASS 3 TEXTURED COATING FINISH
4.1 Cu. Yds.	374 Lbs.	0.2 Gal.	8.1 Sq. Yd.	15.6 Sq. Yd.

Only one of the above three surface treatments shall be applied to the transitional approach railing. See "General Notes" on this sheet.

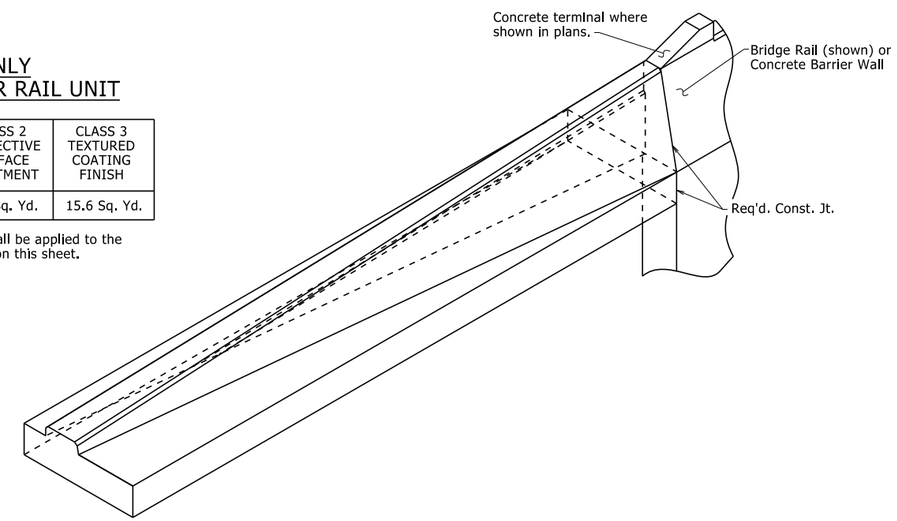

PICTORIAL OF TRANSITIONAL APPROACH RAILING

Sidewalk not shown for clarity
No Scale

SECTION AND SUBSECTION REFER TO THE ARKANSAS STATE HIGHWAY AND TRANSPORTATION DEPARTMENT STANDARD SPECIFICATIONS FOR HIGHWAY CONSTRUCTION (2014 EDITION).

THESE DETAILS ARE APPLICABLE UNLESS OTHERWISE SHOWN IN THE PLAN DETAILS, SPECIAL PROVISIONS, OR SUPPLEMENTAL SPECIFICATIONS.

STANDARD DETAILS FOR TRANSITIONAL APPROACH RAILING TYPE SSTR36

ARKANSAS STATE HIGHWAY COMMISSION

LITTLE ROCK, ARK.

DRAWN BY:	KWY	DATE:	4/8/2021	FILENAME:	b55013a.dgn
CHECKED BY:	BHS	DATE:	4/8/2021	SCALE:	As Shown
DESIGNED BY:	STD.	DATE:	--		

DRAWING NO. 55013A

PRINT DATE: 4/9/2021

DATE REVISED	DATE FILMED	DATE REVISED	DATE FILMED	FED. ROAD DIST. NO.	STATE	FED. AID PROJ. NO.	SHEET NO.	TOTAL SHEETS
				6	ARK.			
				JOB NO.				

1 TYPE H2 RAILING - 55015

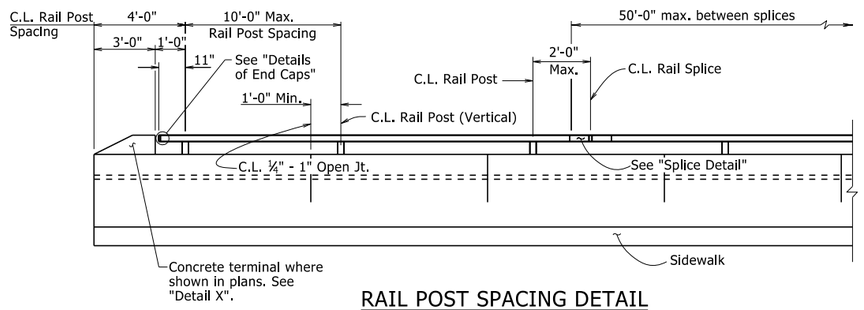

RAIL POST SPACING DETAIL

(Horizontal dimensions are along face of rail)

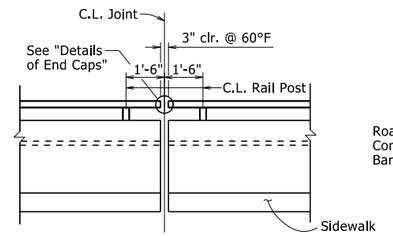

RAIL POST SPACING AT EXPANSION JOINTS

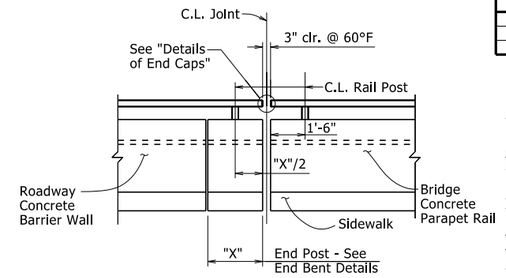

RAIL POST SPACING AT BRIDGE ENDS WITH CONCRETE BARRIER WALL

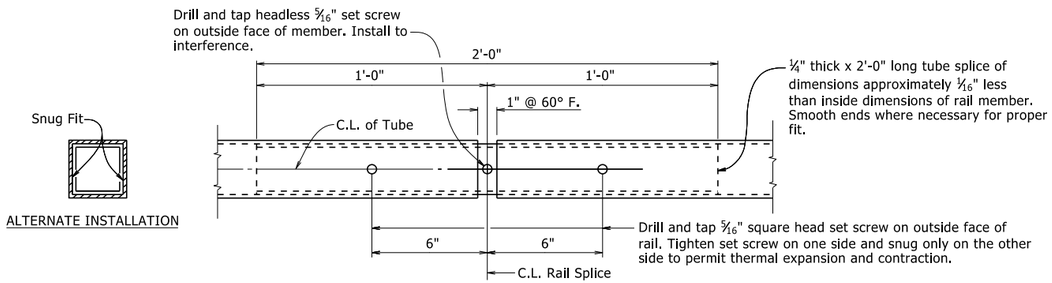

SPLICE DETAIL

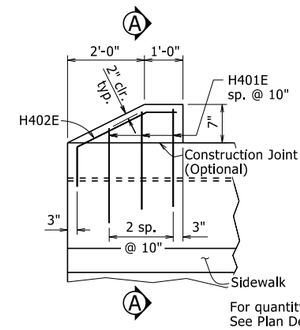

DETAIL X

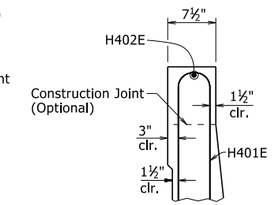

SECTION A-A

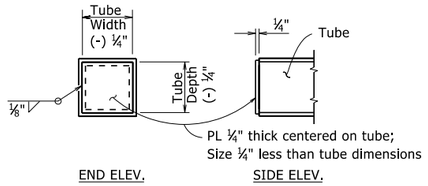

DETAILS OF END CAPS

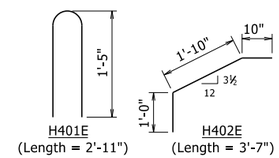

Pin diameter for bending is 2". Bars shall be epoxy coated.

BENDING DIAGRAMS

(Dimensions are Out-to-Out of Bars)

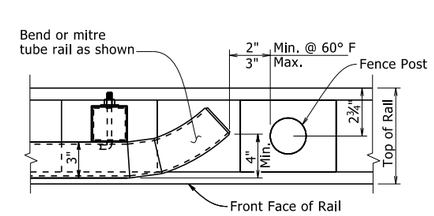

DETAILS OF RAIL TERMINUS AT FENCE POST

(When Chain Link Fence is Required)

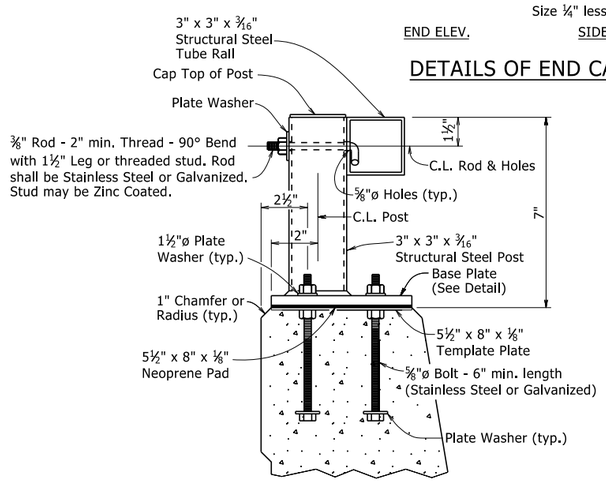

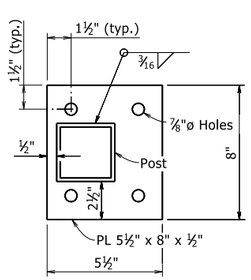

DETAILS OF POST ANCHOR SYSTEM

(Cast-in-Place Bolts)

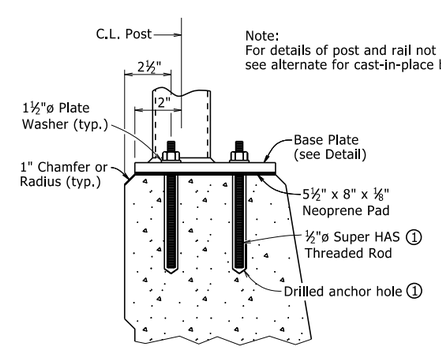

Note:
For details of post and rail not shown, see alternate for cast-in-place bolts.

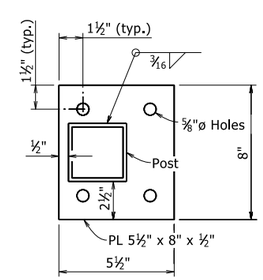

1 HILTI HIT RE 500 Epoxy Adhesive Anchor System with 4½" embedment or approved equal.

The Hilti Epoxy Adhesive Anchor System (or approved equal) shall be installed in accordance with Manufacturer's recommendations.

DETAILS OF ALTERNATE POST ANCHOR SYSTEM

(Epoxy Adhesive Anchors)

MATERIALS:

Rail tubing, posts, end caps, and base plates shall conform to ASTM A709, Grade 36 or ASTM A500-Grade B, and shall be galvanized after fabrication in accordance with Subsection 806.02(c). When required elsewhere in the plans, steel rail members shall receive a powder coating process after galvanizing. Galvanized surfaces shall be prepared in accordance with Subsection 807.87 and the manufacturer's recommendations prior to application of the powder coating process.

The powder coating process shall be a two coat system applied using electrostatic spray. The base coat shall be a thermosetting epoxy powder with a minimum thickness of 2 to 4 mils. The top coat shall be tough polyester powder with a minimum thickness of 2 to 4 mils. The color shall be as shown in the plans. Coated galvanized framework shall have a salt spray resistance of 3,000 hours using ASTM B117 without loss of adhesion. The powder coating process shall be in accordance with manufacturer's recommendations. Any damage to the powder coated finish shall be repaired with a compatible touch-up system in accordance with the manufacturer's recommendations and to the satisfaction of the Engineer at the Contractor's expense.

Cast-in-place anchor bolts, nuts, washers, and set screws shall be galvanized high-strength steel or stainless steel. Mixing of galvanized and stainless steel fasteners will not be permitted.

High-Strength Steel:
Cast-in-place anchor bolts shall conform to ASTM F3125, Grade A325, Type 1.
Nuts shall conform to ASTM A563, Grade DH or AASHTO M 292, Grade 2H.
Washers shall conform to ASTM F436.
Plate Washers shall conform to ASTM A709, Grade 36.
Template Plates shall conform to ASTM A709, Grade 36.
Splice Set Screws shall conform to ASTM A307, Grade A.
Anchor bolts, nuts, washers, plate washers, and set screws shall be galvanized in accordance with AASHTO M 232, Class C or ASTM B695, Class 50.

Stainless Steel:
Cast-in-place anchor bolts shall conform to ASTM A193, Grade B8, Class 2 or A320, Grade B8, Class 2 with a minimum yield strength of 80,000 psi.
Nuts shall conform to ASTM A194, Grade 8.
Washers shall conform to ASTM A240, Type 302.
Plate Washers shall conform to ASTM A240, Type 302.
Template Plates shall conform to ASTM A240, Type 302.
Splice Set Screws shall conform to ASTM A193, Grade B8, Class 1 or A320, Grade B8, Class 1.

Threads on bolts, screws, and nuts shall conform to American Standard Coarse Series, Class 2 FIT, ASA Specification B1.1. Plate washers shall have dimensions meeting the requirements of ANSI/ASME B18.22.1, Type A plain washer (Wide Series) unless otherwise noted. Neoprene pads shall conform to the requirements of Subsection 807.15(b).

GENERAL NOTES FOR BRIDGE RAILING:

Rail layout shall conform to vertical and horizontal alignment of bridge. All posts shall be vertical. Rail sections shall be fabricated to attach to at least three posts.

Base plates shall not be placed upon areas that are improperly finished, deformed or irregular.

Bridge railing, including posts, templates, and base plates, fasteners, and neoprene pads shall be paid for at the contract unit price bid per linear foot for "Metal Bridge Railing (Type H2)". When required elsewhere in the plans, powdered coating finish and repair of powdered coating finish shall be considered subsidiary to the item "Metal Bridge Railing (Type H2)".

Shop drawings showing details of railing shall be submitted and approval secured prior to fabrication.

SECTION AND SUBSECTION REFER TO THE ARKANSAS STATE HIGHWAY AND TRANSPORTATION DEPARTMENT STANDARD SPECIFICATIONS FOR HIGHWAY CONSTRUCTION (2014 EDITION).

THESE DETAILS ARE APPLICABLE UNLESS OTHERWISE SHOWN IN THE PLAN DETAILS, SPECIAL PROVISIONS, OR SUPPLEMENTAL SPECIFICATIONS.

STANDARD DETAILS FOR
TYPE H2 RAILING

ARKANSAS STATE HIGHWAY COMMISSION

LITTLE ROCK, ARK.

DRAWN BY:	KJT	DATE:	6/25/2020	FILENAME:	b55015.dgn
CHECKED BY:	KWY	DATE:	6/25/2020	SCALE:	No Scale
DESIGNED BY:	STD.	DATE:	-		

DRAWING NO. 55015

PRINT DATE: 4/6/2021

DATE REVISED	DATE REVISED	FED. RD. DIST. NO.	STATE	JOB NO.	SHEET NO.	TOTAL SHEETS
		6	ARK.			

Type F Approach Slab - 55040F1

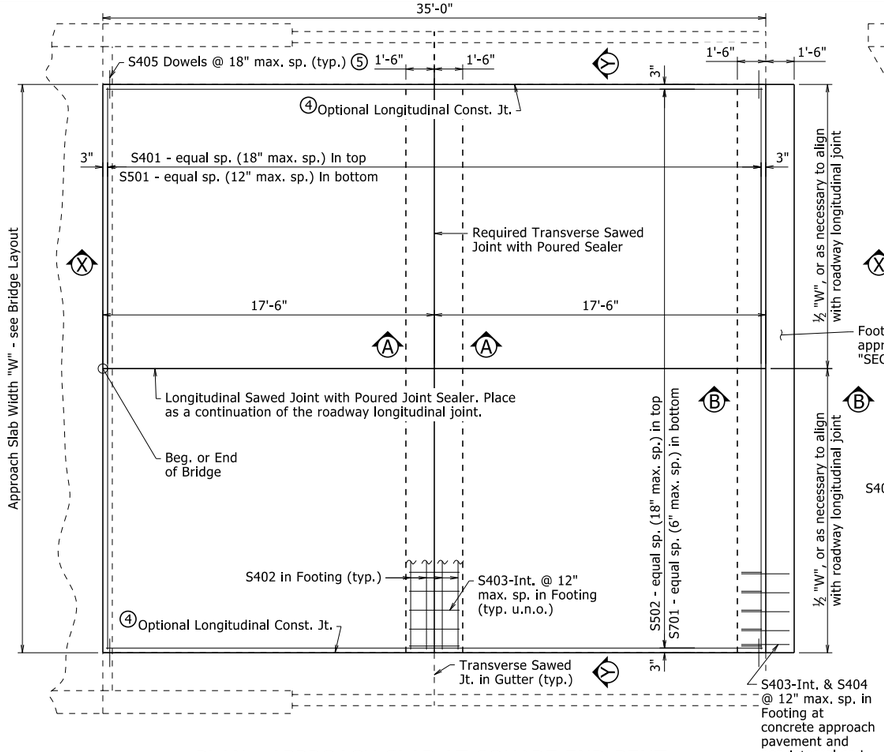

PLAN - APPROACH SLAB AT SQUARE END BENT

Integral End Bent Shown
¼" = 1'-0"

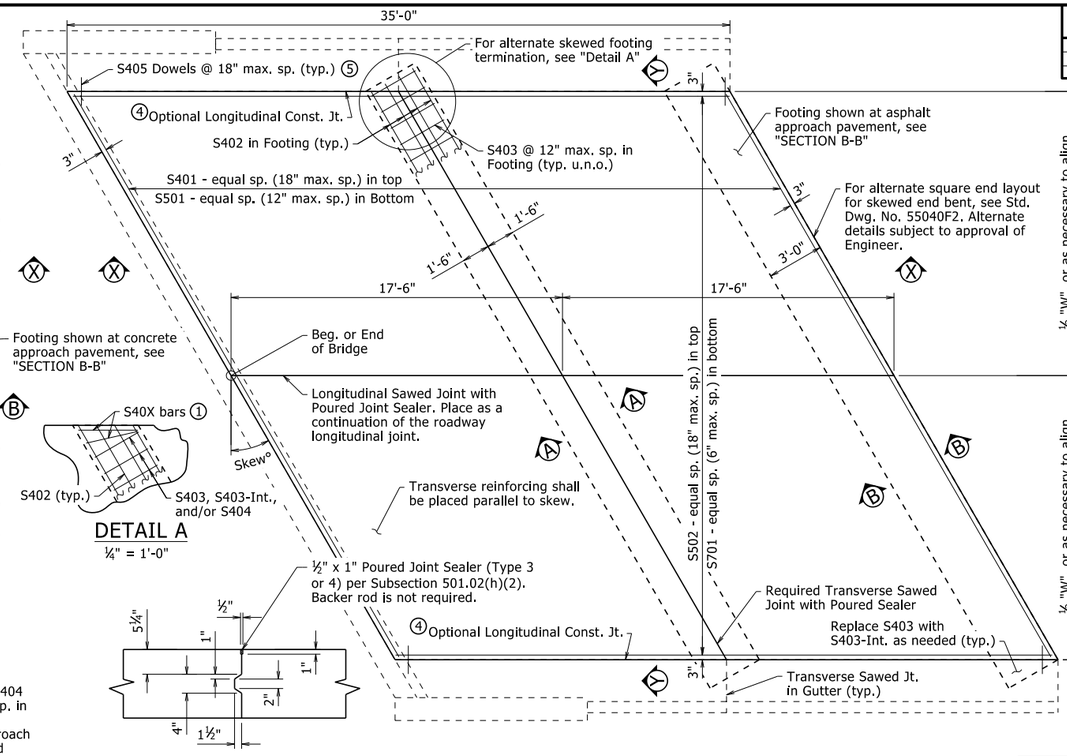

DETAIL A

¼" = 1'-0"

LONGITUDINAL CONSTRUCTION JOINT

½" = 1'-0"

PLAN - APPROACH SLAB AT SKEWED END BENT

Non-Integral End Bent Shown
¼" = 1'-0"

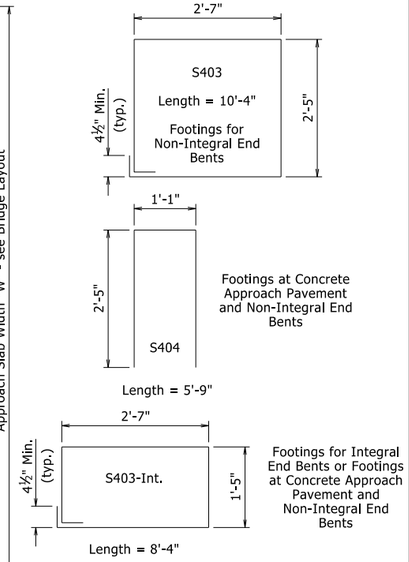

BENDING DIAGRAMS

No Scale
Dimensions are out to out of bar
2" PIn Diameter (typ.)

BAR LIST - PER APPROACH SLAB

	Square End Bent		Skewed End Bent	
Mark	No. Req'd.	Length	No. Req'd.	Length
S401	24	"W" - 0.33'	24	("W" - 0.33') / cos (Skew°)
S402	8	"W" - 0.33'	8	"W"/cos(Skew°) + 3.0'×tan(Skew°) - 0.33'
S403	①	②	①	②
S403-Int.	①	②	①	②
S404	①	②	①	②
S405	48	1'-6"	48	1'-6"
S501	36	"W" - 0.33'	36	("W" - 0.33') / cos (Skew°)
S502	①	34'-8"	①	34'-8"
S701	①	34'-8"	①	34'-8"

All bar lengths are in feet.

① Varies with Approach Slab Type, Width and/or Skew.
② See "BENDING DIAGRAMS"

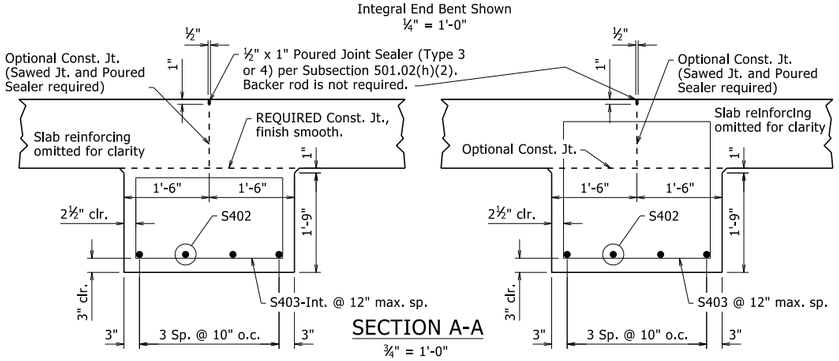

SECTION A-A

¾" = 1'-0"

INTERIOR FOOTING FOR INTEGRAL END BENT

INTERIOR FOOTING FOR NON-INTEGRAL END BENT

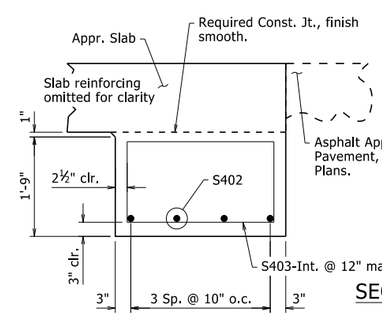

SECTION B-B

¾" = 1'-0"

APPROACH END FOOTING FOR INTEGRAL END BENT

Asphalt Approach Shown. For Concrete Approach, adjust footing location by 1'-6" to add paving notch and include expansion joint.

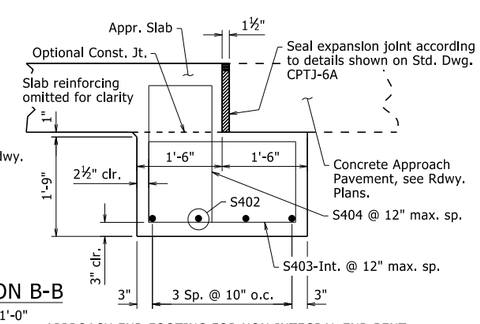

APPROACH END FOOTING FOR NON-INTEGRAL END BENT

Concrete Approach Shown. For Asphalt Approach, adjust footing location by 1'-6", omit expansion joint, and replace bars S403-Int. & S404 with S403.

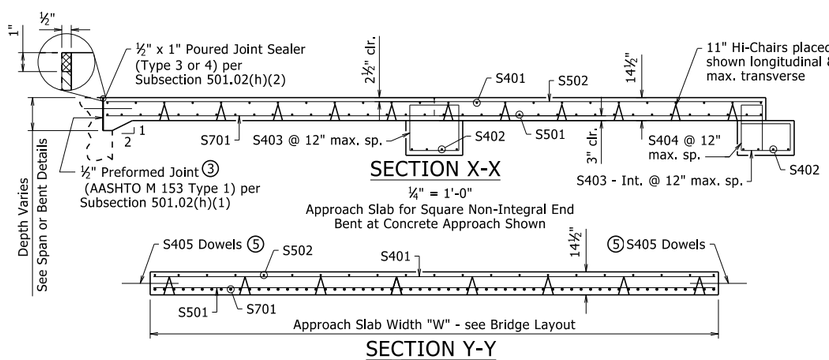

SECTION X-X

¼" = 1'-0"

Approach Slab for Square Non-Integral End Bent at Concrete Approach Shown

SECTION Y-Y

¼" = 1'-0"

GENERAL NOTES

All concrete shall be Class S(AE) with a minimum 28 day compressive strength f'c = 4,000 psi and shall be poured in the dry.

All reinforcing steel shall be Grade 60 (yield strength = 60,000 psi) conforming to AASHTO M 31 or M 322, Type A, with mill test reports.

The surface finish for Approach Slabs shall match that used on the bridge deck.

All longitudinal lines within the limits of horizontal curves shall be on curves concentric to C.L. Bridge. Adjustment to longitudinal bar lengths may be required. Transverse reinforcing shall be placed on radial lines to C.L. Bridge.

See Plans for actual Approach Slab Width, "W", end bent or span details, and approach pavement. Units of "W" are in Feet.

Approach Slabs will be measured and paid for in accordance with Section 504.

Scales shown are for full size 22"x34" drawings. When using 11"x17" drawings, reduce scale by one half.

For Table of Quantities, see "SCHEDULE OF BRIDGE QUANTITIES".

③ Eliminate Type 1 Preformed Joint when bridge details show reinforcing dowels across these joints. Poured joint sealer is required, however, backer rod shall be eliminated.

④ When construction joint is eliminated, place 1" Sawed Joint with ½" x 1" Poured Joint Sealer (Type 3 or 4) per Subsection 501.02(h)(2). Backer rod is not required.

⑤ Eliminate dowels when approach slab is adjacent to curb and gutter, or as directed by the Engineer.

MINIMUM BAR LAP LENGTH

#4	1'-8"
#5	2'-0"
#7	2'-10"

The document was originally issued and sealed by Charles R. Ellis, PE No. 9235, on September 7, 2023. This copy is not a signed and sealed document.

STATE OF ARKANSAS
LICENSED PROFESSIONAL ENGINEER
No. 9235
CHARLES R. ELLIS

BRIDGE ENGINEER

STANDARD DETAILS FOR
TYPE F APPROACH SLAB

ARKANSAS STATE HIGHWAY COMMISSION

LITTLE ROCK, ARK.

DRAWN BY:	CGP	DATE:	05/12/2023	FILENAME:	b55040f.dgn
CHECKED BY:	JYP	DATE:	05/15/2023	SCALE:	AS NOTED
DESIGNED BY:	STD.	DATE:	-		

DRAWING NO. 55040F1

DATE REVISED	DATE FILMED	DATE REVISED	DATE FILMED	FED. ROAD DIST. NO.	STATE	FED. AID PROJ. NO.	SHEET NO.	TOTAL SHEETS
09/27/2022				6	ARK.			
				JOB NO.				

1 TYPE SSTR36 - 55070

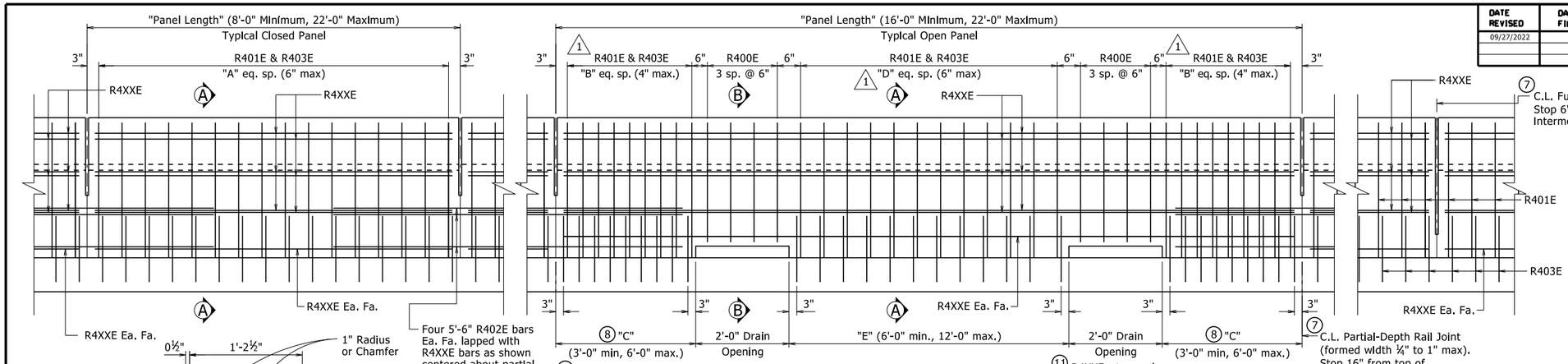

1 ELEVATION - SINGLE SLOPE TRAFFIC RAIL

¾" = 1'-0"

1. All measurements shown are along gutterline at base of rail.
2. Minimum embedment into deck/slab.
3. Eliminate recess when formliner with architectural finish is used. See Plans for additional information.
4. C.L. 1" ø formed holes for ⅞" ø bolts. See Standard Drawings GR-10 and GR-12 for additional information.
5. Only applicable for bridges with rail cast directly on bridge deck/slab surface. Increase height as necessary for sidewalks, see Plans for additional information.
6. Field bend front leg of R401E bar as required to maintain minimum 1½" front face clearance within limits of taper.
7. When optional slip forming is used: to control cracking, all rail joints must be V-grooved around the perimeter of the rail prior to concrete set and sawing. Depth of V-groove shall be ½". Sawing of the joints shall be done as soon as practical to a width of ¼", and must be controlled so it will follow the V-Groove.
8. End posts shall be the same length within a panel.

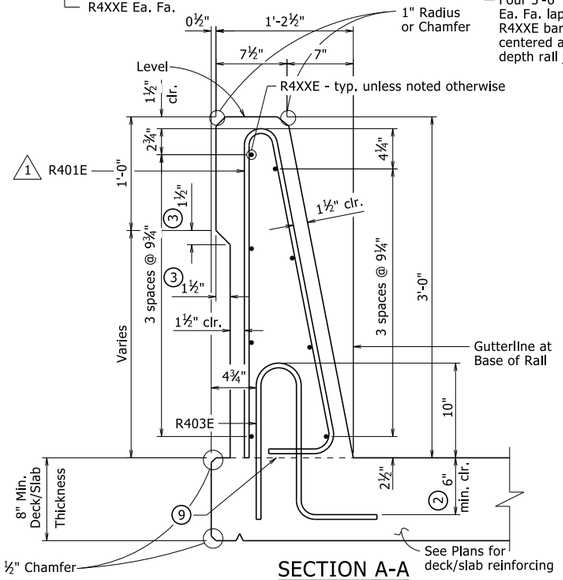

SECTION A-A

1½" = 1'-0"

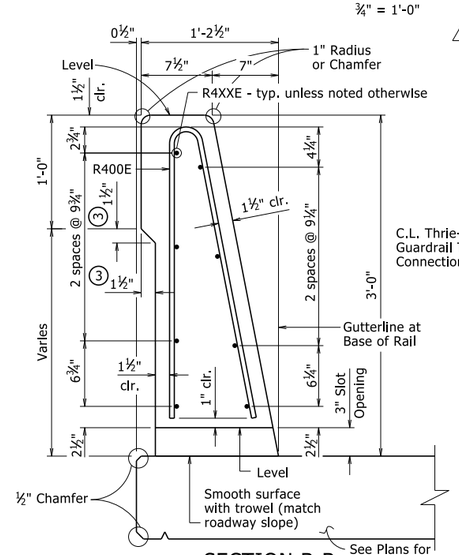

SECTION B-B

1½" = 1'-0"

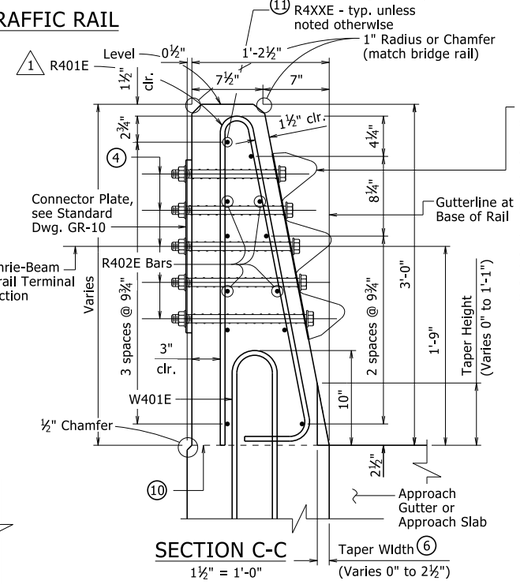

Bolt Special End Shoe to face of rail as shown. Tapered washers are not required between the head of the bolts and the sloped face of the rail. Tighten the five terminal connection bolts in a well distributed pattern to prevent damage or distortion of the thrie-beam connection. Cut bolts off after installation so as to extend no more than ¾" beyond nut. Paint ends of cut-off bolts with zinc-rich paint. This work and material will not be paid for directly but shall be considered subsidiary to associated contract items.

SECTION C-C

1½" = 1'-0"

BENDING DIAGRAM

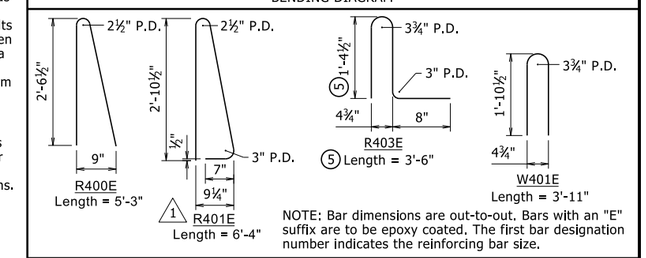

NOTE: Bar dimensions are out-to-out. Bars with an "E" suffix are to be epoxy coated. The first bar designation number indicates the reinforcing bar size.

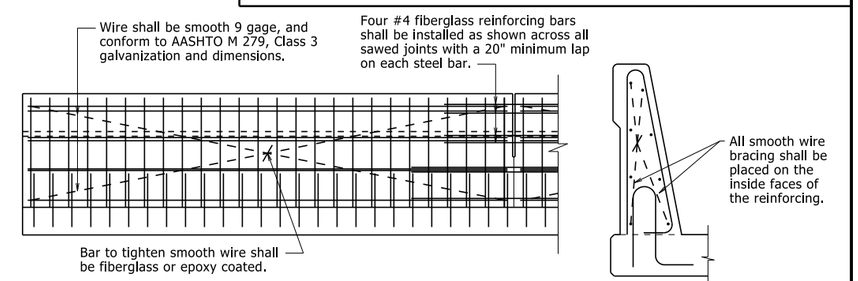

The extruded rail shall conform to the horizontal and vertical lines shown on the plans or as directed by the Engineer and shall present a smooth, uniform appearance and texture. Unless otherwise noted, exposed surfaces may be given a light brush finish or a Class 3, Textured Coating Finish in place of Class 2, Rubbed Finish.

All panels shall be braced as required to prevent racking.

Slip forming will not be allowed on bridges where formliner with architectural treatment is used unless approval from the Engineer is obtained.

DETAILS OF OPTIONAL SLIP FORMING OF BRIDGE TRAFFIC RAIL

No Scale

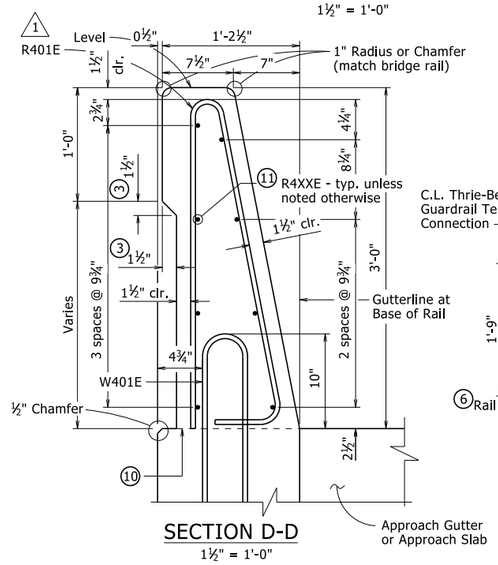

SECTION D-D

1½" = 1'-0"

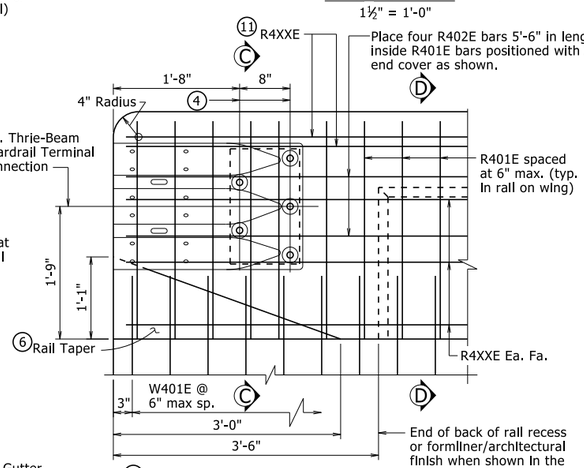

1 RAIL TERMINUS DETAILS

1" = 1'-0"

9 Required Construction Joint. Level where water flows away from rail, match roadway slope where water flows toward rail.

10 Top of Abutment Wing & Required Construction Joint (match bridge deck/slab construction joint slope). See Plans for Wing reinforcing.

11 These bars will not be included in the "Table of Variables". See Plans for details.

TABLE OF VARIABLES

Closed Rail Panels			Open Rail Panels					
Panel Length	A	R4XXE	Panel Length	B	C	D	E	R4XXE

See Plans for table with values.

GENERAL NOTES

This rail has been successfully evaluated by full-scale crash test to meet MASH TL-4 criteria.

Details shown are general for bridges without sidewalks. See Plans for additional details and requirements specific to bridges with sidewalks.

For Table of Variables, Rail Bar List, locations of Full and Partial Depth Rail Joints, and Wing & Rail Bar Lists, see Plans.

For location of drain openings, see Plans. Drain openings shown are not applicable for bridges with sidewalks. Drain openings will not be allowed over Railroad Right of Way, travelled roadways, and protected waterways.

Rail Terminus details, including Rail Taper, are not applicable for bridges with sidewalks or when bridge railing is continuous with roadway railing.

Scales shown are for 22"x34" drawings. When using 11"x17" drawings, reduce scale by one half.

1 Modified bending diagram and spacing for R401E bar.

By: CGP, Checked by: CMW 09/27/2022

This document was originally issued and sealed by Charles R. Ellis, PE No. 9235, on November 5, 2020. This copy is not a signed and sealed document.

STATE OF ARKANSAS
LICENSED PROFESSIONAL ENGINEER
No. 9235
CHARLES R. ELLIS

BRIDGE ENGINEER

THESE DETAILS ARE APPLICABLE UNLESS OTHERWISE SHOWN IN THE PLAN DETAILS, SPECIAL PROVISIONS, OR SUPPLEMENTAL SPECIFICATIONS.

STANDARD DETAILS FOR BRIDGE TRAFFIC RAIL TYPE SSTR36

ARKANSAS STATE HIGHWAY COMMISSION

LITTLE ROCK, ARK.

DRAWN BY:	KWY	DATE:	11/5/2020	FILENAME:	b55070.dgn
CHECKED BY:	LJB	DATE:	11/5/2020	SCALE:	As Noted
DESIGNED BY:	STD.	DATE:	-----		

DRAWING NO. 55070

PRINT DATE: 10/6/2022