DATE REVISED	DATE FILMED	DATE REVISED	DATE FILMED	FED. ROAD NO.	STATE	FED. AID PROJ. NO.	SHEET NO.	TOTAL SHEETS
2-6-86	7A) 2-11-86			6	ARK.			
				JOB NO.		60297	32	89
				1 6126		LAYOUT		27312

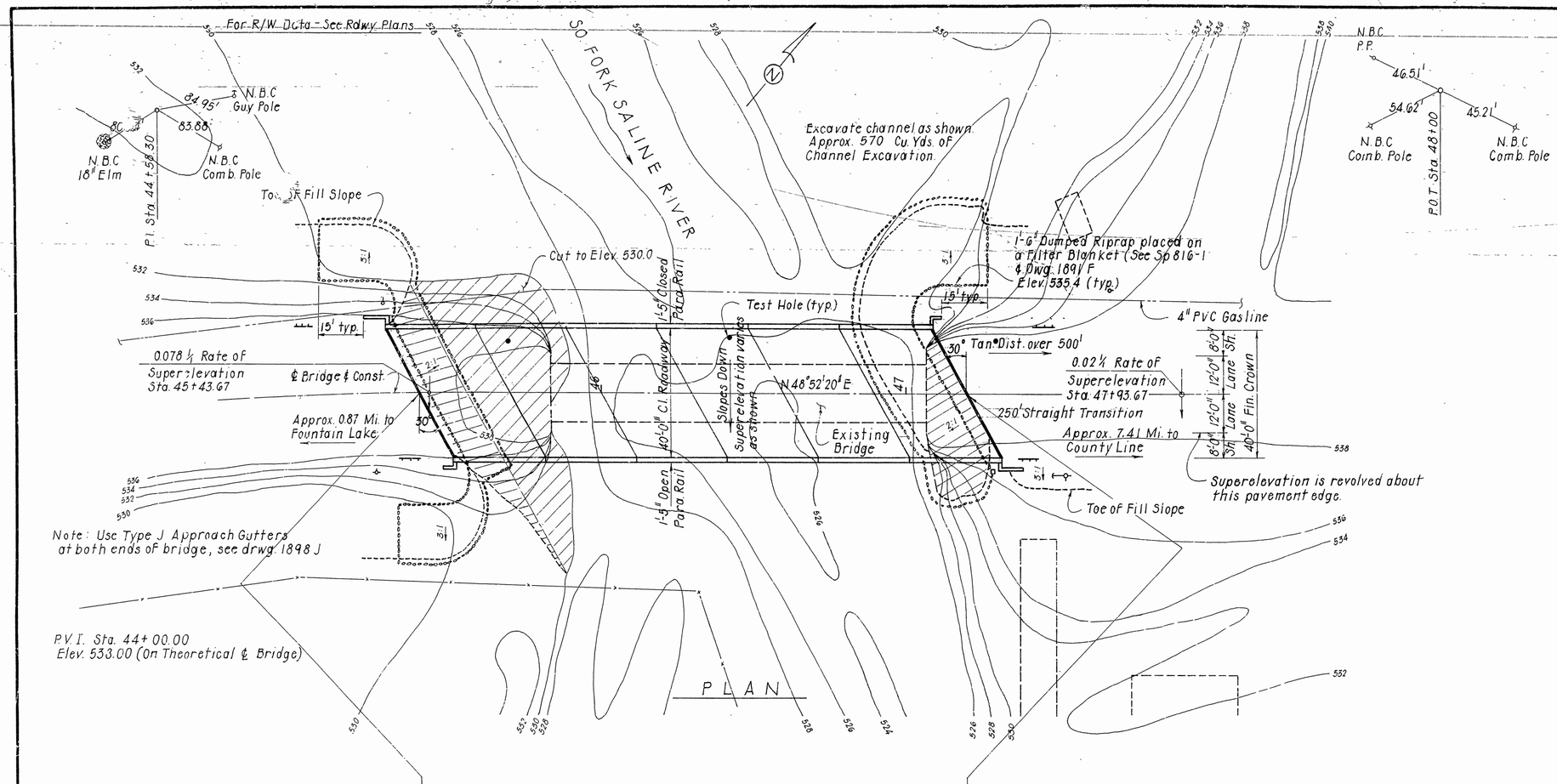

PLAN

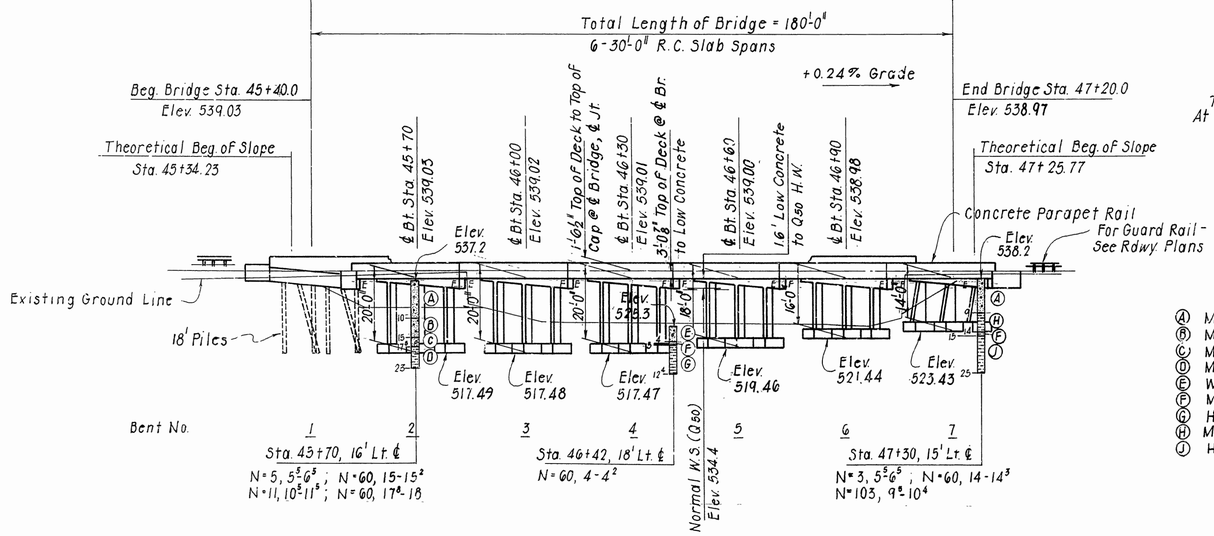

ELEVATION

D. A. = 12.9 Sq. Mi.

DESIGN FLOOD
Q50 = 8080 cfs
Normal W.S. Elev. 534.4
W.S. with Backwater = Elev. 536.7

BASIC FLOOD
Q100 = 9370 cfs
Normal W.S. Elev. 534.9
W.S. with Backwater = Elev. 537.6

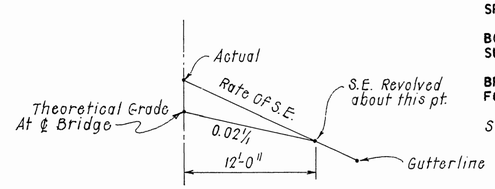

GENERAL NOTES

BENCH MARK: C.P.S. IN SIDE COMB. POLE, STA. 48+33, 26' RT. ELEV. 537.57.

CONSTRUCTION SPECIFICATIONS: ARKANSAS STATE HIGHWAY COMMISSION STANDARD SPECIFICATIONS FOR HIGHWAY CONSTRUCTION, EDITION OF 1978 AND APPLICABLE SPECIAL PROVISIONS.

DESIGN SPECIFICATIONS: AASHTO STANDARD SPECIFICATIONS FOR HIGHWAY BRIDGES, 1983 WITH CURRENT INTERIM SPECIFICATIONS.

LIVE LOADING: HS20

METHOD OF DESIGN: LOAD FACTOR

DETAIL DRAWINGS	DRAWING NO.
END BENTS	27313, 27314
INTERMEDIATE BENTS	27315
SPANS	27316-27317
EXCAVATION FOR STRUCTURES	1891F
EMBANKMENT CONSTRUCTION	1888A
PILING SPLICES	14995A
GUARD RAIL CONNECTION	GR-3A
TYPE C BRIDGE NAME PLATES	2389A
TYPE J APPROACH GUTTERS	1898J
TEMPORARY BRIDGE STRUCTURES	2391 & 2392A

STEEL PILING: PILING FOR BENTS 1 SHALL BE HP10X42 AND SHALL BE DRIVEN WITH AN APPROVED AIR, STEAM, OR DIESEL HAMMER TO A MINIMUM BEARING CAPACITY OF 55 TONS PER PILE AND INTO THE MATERIAL DESIGNATED AS SHALE ON THE BORING LOG. LENGTHS OF PILING SHOWN ARE FOR ESTIMATING QUANTITIES ONLY. ORDER LENGTHS SHOWN, CUT-OFF OR BUILD-UP, IF NECESSARY TO BE PAID FOR IN ACCORDANCE WITH THE STANDARD SPECIFICATIONS. PILES IN END BENTS TO BE DRIVEN AFTER EMBANKMENT TO BOTTOM OF CAP IS IN PLACE.

FOOTINGS: FOOTINGS SHALL BE SET A MINIMUM OF 1'-6" INTO MATERIAL DESIGNATED BY THE BORING LOG AS SHALE. THE TOP OF THE FOOTING SHALL BE SET A MINIMUM OF 0.5' BELOW THE CHANNEL BOTTOM. FOUNDATIONS FOR FOOTINGS SHALL BE PREPARED IN ACCORDANCE WITH SECTION 801.04 OF THE STANDARD SPECIFICATIONS.

EXISTING BRIDGE: REMOVE THE EXISTING 18' WIDE BY 122.78' LONG BRIDGE NO. M6104. THE SUPERSTRUCTURE CONSISTS OF A STEEL TRUSS SPAN WITH CONCRETE DECK. THE SUBSTRUCTURE CONSISTS OF CONCRETE PIERS AND ABUTMENTS.

ALL EXISTING BRIDGE MATERIAL SHALL BECOME THE PROPERTY OF THE CONTRACTOR.

SEE SECTION 205 OF THE STANDARD SPECIFICATIONS.

TEMPORARY BRIDGE: CONSTRUCT A 110' LONG TEMPORARY BRIDGE APPROXIMATELY 40' DOWNSTREAM. THE TEMPORARY BRIDGE SHALL HAVE A MINIMUM ROADWAY WIDTH OF 24 FEET. A MINIMUM LIVE LOAD CAPACITY OF H15 AND A MINIMUM DECK ELEVATION OF 536.0 FT. IF TIMBER PILING AND PINE TIMBER ARE USED ON THE TEMPORARY BRIDGE, THE MATERIALS SHALL BE TREATED WITH A PRESERVATIVE ACCORDING TO THE STANDARD SPECIFICATIONS. SEE SECTION 603 OF THE STANDARD SPECIFICATIONS.

BOILED LINSEED OIL: BOILED LINSEED OIL TREATMENT SHALL BE APPLIED TO THE ROADWAY SURFACE AND FACE AND TOP OF THE CONCRETE PARAPET RAIL.

BRIDGE DECK: THE CONCRETE BRIDGE DECK SHALL BE GIVEN A TINE FINISH AS SPECIFIED FOR FINAL FINISHING IN SUBSECTION 802.23 FOR CLASS 6, ROADWAY SURFACE FINISH.

SEE JOB SPECIAL PROVISION, "WATER POLLUTION CONTROL".

BORING LEGEND

- (A) Moist, loose, brown sand and gravel.
- (B) Moist, medium dense, brown sand and gravel.
- (C) Moist, very dense, brown sand, gravel and cobbles.
- (D) Medium hard to hard, dark gray shale with Quartz seams.
- (E) Wet, Loose, brown sand, gravel and cobbles.
- (F) Medium hard, dark gray shale.
- (G) Hard, dark gray shale with Quartz seams.
- (H) Medium hard, brown and gray weathered shale.
- (J) Hard, dark gray shale.

LAYOUT OF BRIDGE OVER SOUTH FORK SALINE RIVER
HOT SPRINGS-HOT SPRINGS VILLAGE BRS. & APPRS.
GARLAND COUNTY

ROUTE 5 **SEC.** 6

ARKANSAS STATE HIGHWAY COMMISSION
LITTLE ROCK, ARK.

DRAWN BY: L.M. DATE: 10-9-84
CHECKED BY: MRJ DATE: 2-6-85
DESIGNED BY: DFL DATE: 10-9-84
SCALE: 1" = 20'

Neal Pinkerton
BRIDGE ENGINEER

BRIDGE NO. 6126 **DRAWING NO.** 27312

201

DATE REVISED	DATE FILMED	DATE REVISED	DATE FILMED	FED. ROAD NO.	STATE	FED. AID PROJ. NO.	SHEET NO.	TOTAL SHEETS
				6	ARK.			
				JOB NO.		60297	34	89
				6126		BENT		27314

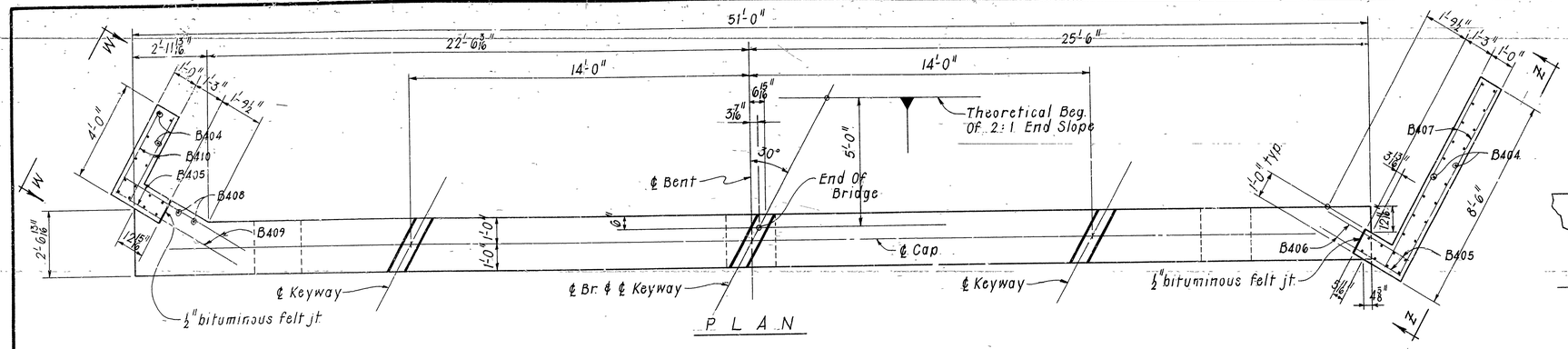

PLAN

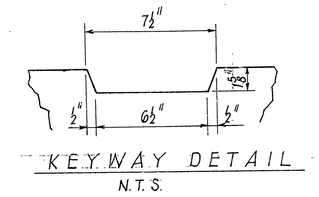

KEYWAY DETAIL
N.T.S.

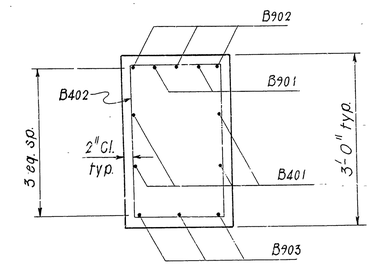

SECTION Y-Y
¾" = 1'-0"

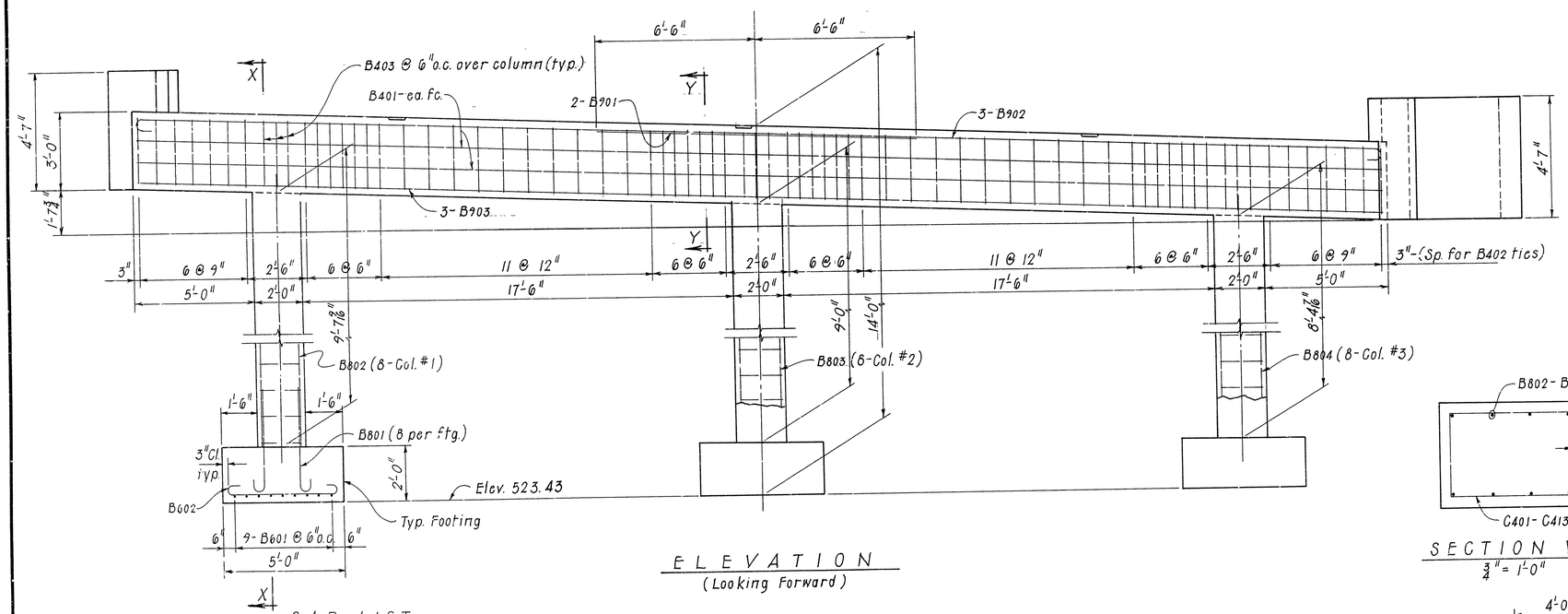

ELEVATION
(Looking Forward)

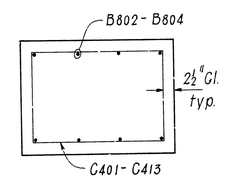

SECTION V-V
¾" = 1'-0"

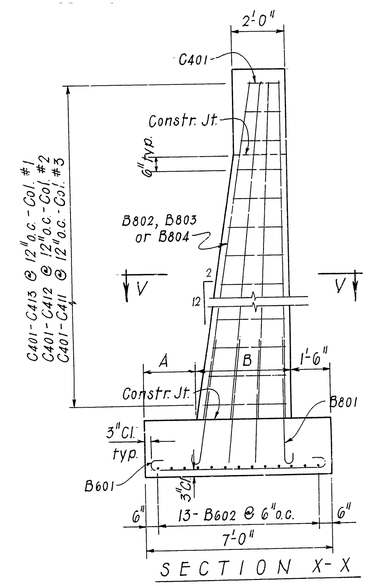

SECTION X-X

VARIABLES

Column	A	B
Col. #1	1'-10¾"	3'-7¼"
Col. #2	2'-0"	3'-6"
Col. #3	2'-1¼"	3'-4¾"

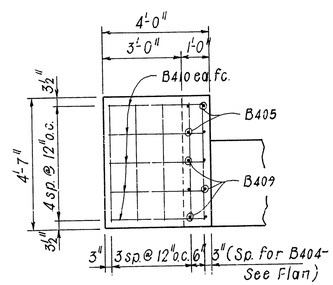

VIEW W-W

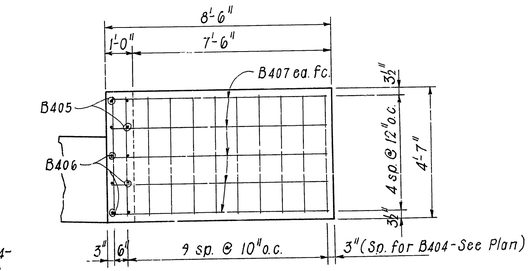

VIEW Z-Z

BAR LIST

MK	No. Req'd.	Length	Q	R	Pin Dia.
B901	2	13'-0"			Str.
B902	3	53'-2"	50'-8"	10"	9"
B903	3	50'-6"			Str.
B801	24	5'-11"			6"
B802	8	12'-2"			Str.
B803	8	11'-6"			Str.
B804	8	10'-11"			Str.
B601	27	7'-10"	6'-6"	6"	4½"
B602	39	5'-10"	4'-6"	6"	4½"
B401	8	26'-2"			Str.
B402	62	9'-6"	1'-8"	2'-8"	2"
B403	9	6'-10"	1'-8"	2'-8"	2"
B404	40	4'-3"			Str.
B405	8	1'-11"			Str.
B406	6	3'-8"			Str.
B407	10	8'-2"			Str.
B408	2	2'-8"			Str.
B409	6	5'-6"			Str.
B410	10	3'-8"			Str.
C401 to C411	3 ea.	6'-4" to 9'-8"	1'-2" to 2'-10"	1'-7"	2"
C412	2	10'-0"	3'-0"	1'-7"	2"
C413	1	10'-4"	3'-2"	1'-7"	2"

Bending Diagrams

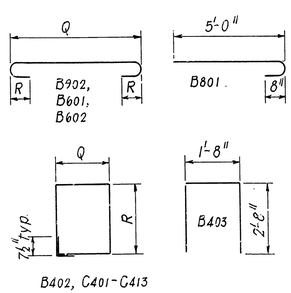

Dimens. are out to out of bars.

GENERAL NOTES

METHOD OF DESIGN: LOAD FACTOR

CONCRETE: ALL CONCRETE SHALL BE CLASS "S" WITH A MINIMUM 28 DAY COMPRESSIVE STRENGTH f'c = 3500 PSI.

REINFORCING STEEL: REINFORCING STEEL SHALL CONFORM TO ASTM A615 OR A617, GRADE 60 (YIELD STRENGTH = 60,000 PSI).

ALL CONCRETE TO BE CLASS S AND SHALL BE POURED IN THE DRY. ALL EXPOSED CORNERS TO BE CHAMFERED 3/4" UNLESS OTHERWISE NOTED.

SPECIFICATIONS: ARKANSAS STATE HIGHWAY COMMISSION STANDARD SPECIFICATIONS FOR HIGHWAY CONSTRUCTION, EDITION OF 1978 AND APPLICABLE SPECIAL PROVISIONS.

LIVE LOAD: HS20

DESIGN SPECIFICATIONS: AASHTO STANDARD SPECIFICATIONS FOR HIGHWAY BRIDGES, 1983

Kirsal Pinkerton
BRIDGE ENGINEER

DETAILS OF END BENT 7
SO. FORK SALINE RIVER

ROUTE SEC.

ARKANSAS STATE HIGHWAY COMMISSION
LITTLE ROCK, ARK.

DRAWN BY: H. Maj. DATE: 2-15-85
CHECKED BY: HJD DATE: 3-7-85
DESIGNED BY: MRL DATE: 12-7-84

SCALE: ⅜" = 1'-0" or as shown

BRIDGE NO. 6126

DRAWING NO. 27314

202

DATE REVISED	DATE FILMED	DATE REVISED	DATE FILMED	FED. ROAD NO.	STATE	FED. AID PROJ. NO.	SHEET NO.	TOTAL SHEETS
				6	ARK.			
				JOB NO.		60297	35	89
				6126		BENT		27315

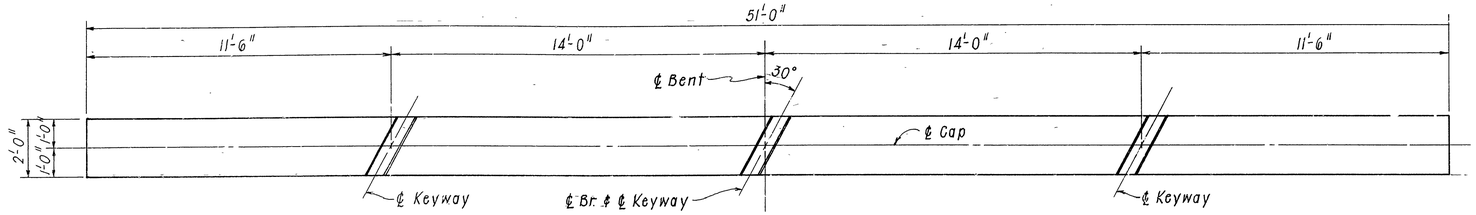

PLAN

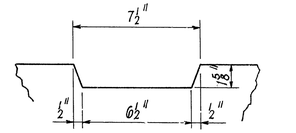

KEYWAY DETAIL
N.T.S.

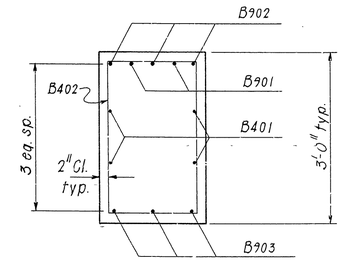

SECTION Y-Y
¾" = 1'-0"

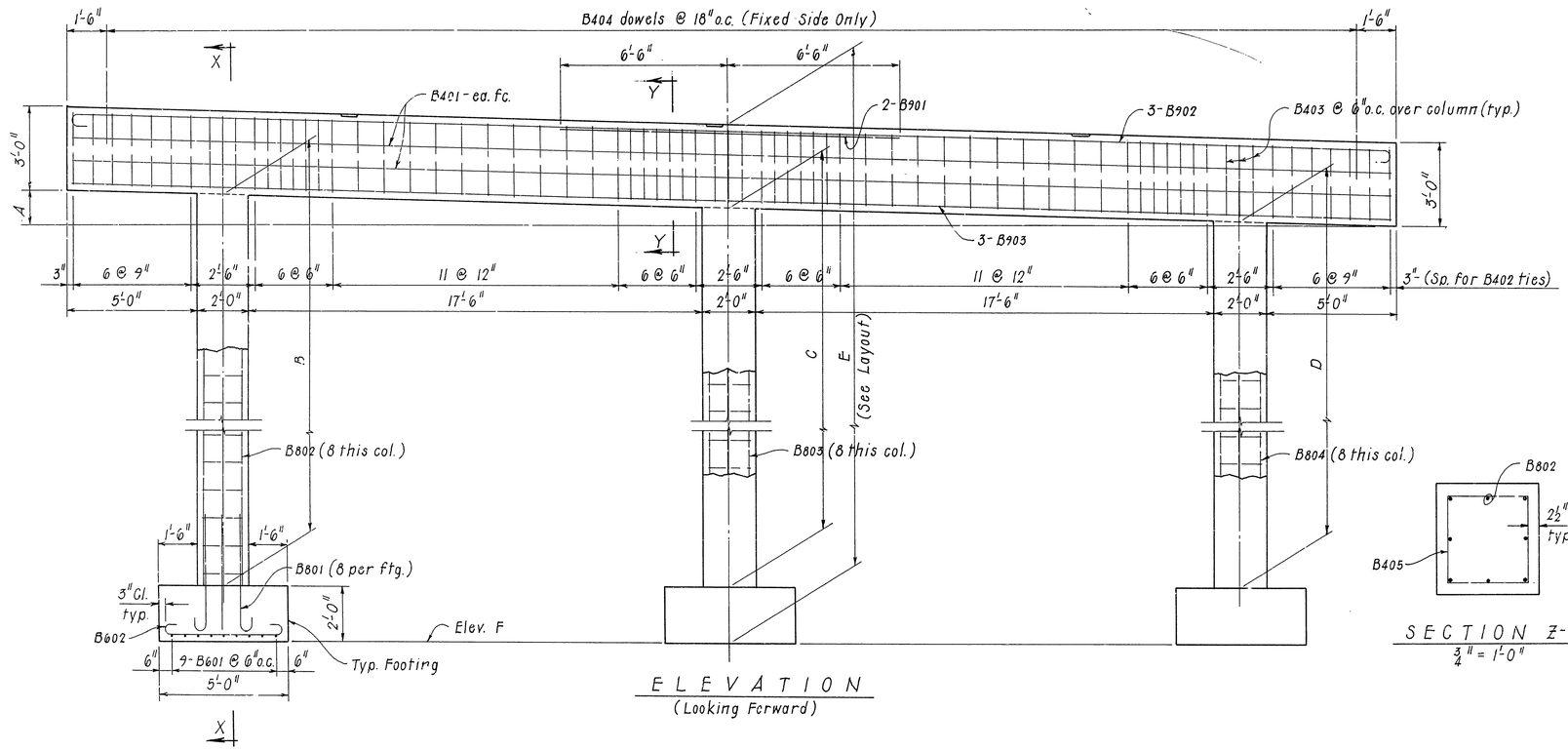

ELEVATION
(Looking Forward)

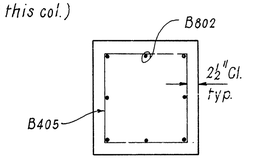

SECTION Z-Z
¾" = 1'-0"

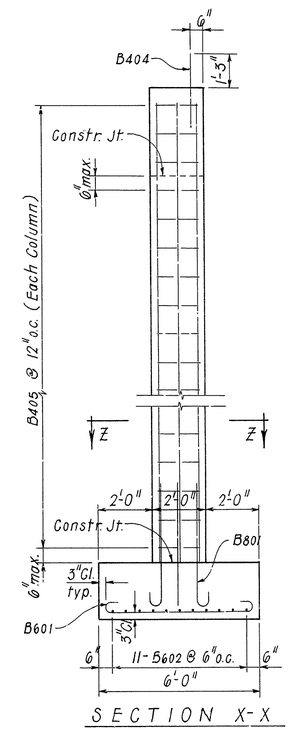

SECTION X-X

BAR LIST PER BENT

MK	No. Req'd.	Length	Q	R	Pin Dia.
B901	2	13'-0"			Str.
B902	3	53'-2"	50'-8"	10"	9"
B903	3	50'-8"			Str.
B801	24	5'-11"			6"
B802	8	B + 2'-6"			Str.
B803	8	C + 2'-6"			Str.
B804	8	D + 2'-6"			Str.
B601	27	6'-10"	5'-6"	6"	4½"
B602	33	5'-10"	4'-6"	6"	4½"
B401	8	26'-2"			Str.
B402	62	9'-6"	1'-8"	2'-8"	2"
B403	9	6'-10"	1'-8"	2'-8"	2"
B404	6	2'-6"			Str.
B405	H	7'-2"	1'-7"	1'-7"	2"

Bending Diagrams

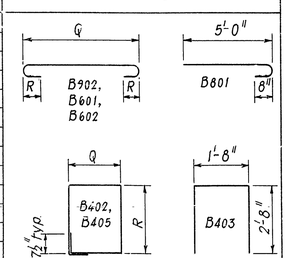

Dimens. are out to out of bars.

TABLE OF VARIABLES

Variable	Bt. 2	Bt. 3	Bt. 4	Bt. 5	Bt. 6
A	3'-2¼"	2'-10½"	2'-6 13/16"	2'-3⅜"	1'-11 7/16"
B	16'-2⅝"	16'-1 7/16"	15'-11¾"	13'-10⅜"	11'-8 15/16"
C	15'-0"	15'-0"	15'-0"	13'-0"	11'-0"
D	13'-9⅜"	13'-10 13/16"	14'-0¼"	12'-1⅝"	10'-3 1/16"
E	20'-0"	20'-0"	20'-0"	18'-0"	16'-0"
Elev. F	517.49	517.48	517.47	519.46	521.44
G	33	33	66	33	33
H	55	55	55	49	43

GENERAL NOTES

ALL CONCRETE TO BE CLASS S AND SHALL BE POURED IN THE DRY. ALL EXPOSED CORNERS TO BE CHAMFERED 3/4" UNLESS OTHERWISE NOTED.

SPECIFICATIONS: ARKANSAS STATE HIGHWAY COMMISSION STANDARD SPECIFICATIONS FOR HIGHWAY CONSTRUCTION, EDITION OF 1978 AND APPLICABLE SPECIAL PROVISIONS.

LIVE LOAD: HS20

DESIGN SPECIFICATIONS: AASHTO STANDARD SPECIFICATIONS FOR HIGHWAY BRIDGES, 1983 WITH CURRENT INTERIM SPECIFICATIONS.

METHOD OF DESIGN: LOAD FACTOR

CONCRETE: ALL CONCRETE SHALL BE CLASS "S" WITH A MINIMUM 28 DAY COMPRESSIVE STRENGTH f'c = 3500 PSI.

REINFORCING STEEL: REINFORCING STEEL SHALL CONFORM TO ASTM A615 OR A617, GRADE 60 (YIELD STRENGTH = 60,000 psi).

DETAILS OF INT. BENTS 2-6
SO. FORK SALINE RIVER
ROUTE SEC.

ARKANSAS STATE HIGHWAY COMMISSION
LITTLE ROCK, ARK.

DRAWN BY: W. Maj. DATE: 2-12-85
CHECKED BY: HJD DATE: 3-7-85
DESIGNED BY: MRT DATE: 12-7-84
SCALE: ⅜" = 1'-0" or as shown

Vernal Pinkerton
BRIDGE ENGINEER

BRIDGE NO. 6126

DRAWING NO. 27315

DATE REVISED	DATE FILMED	DATE REVISED	DATE FILMED	FED. ROAD NO.	STATE	FED. AID PROJ. NO.	SHEET NO.	TOTAL SHEETS
				6	ARK.			
				JOB NO.		60297	36	89
				6126		SPAN	27316	

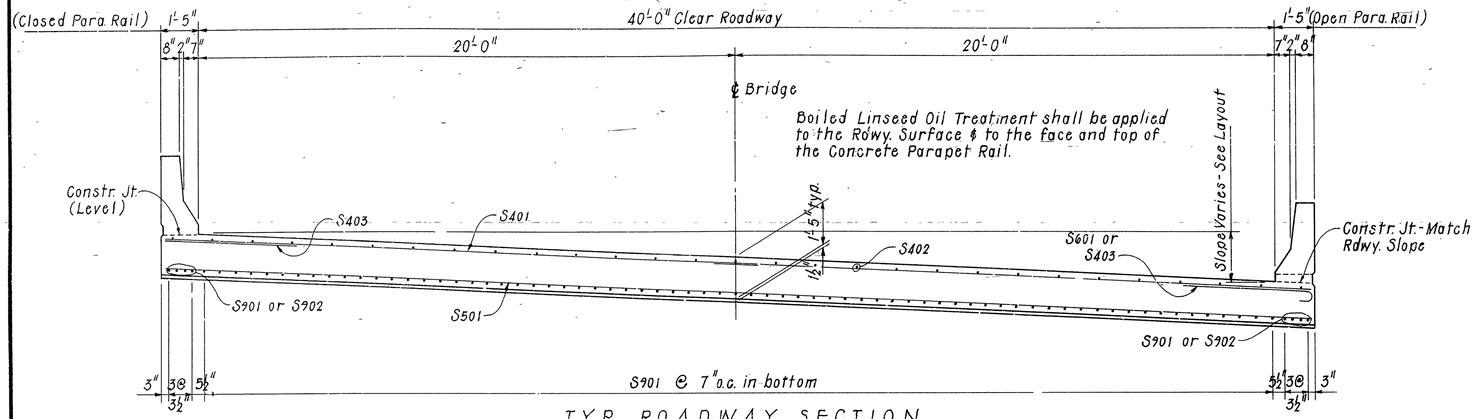

TYP. ROADWAY SECTION

$\frac{3}{8}$" = 1'-0"

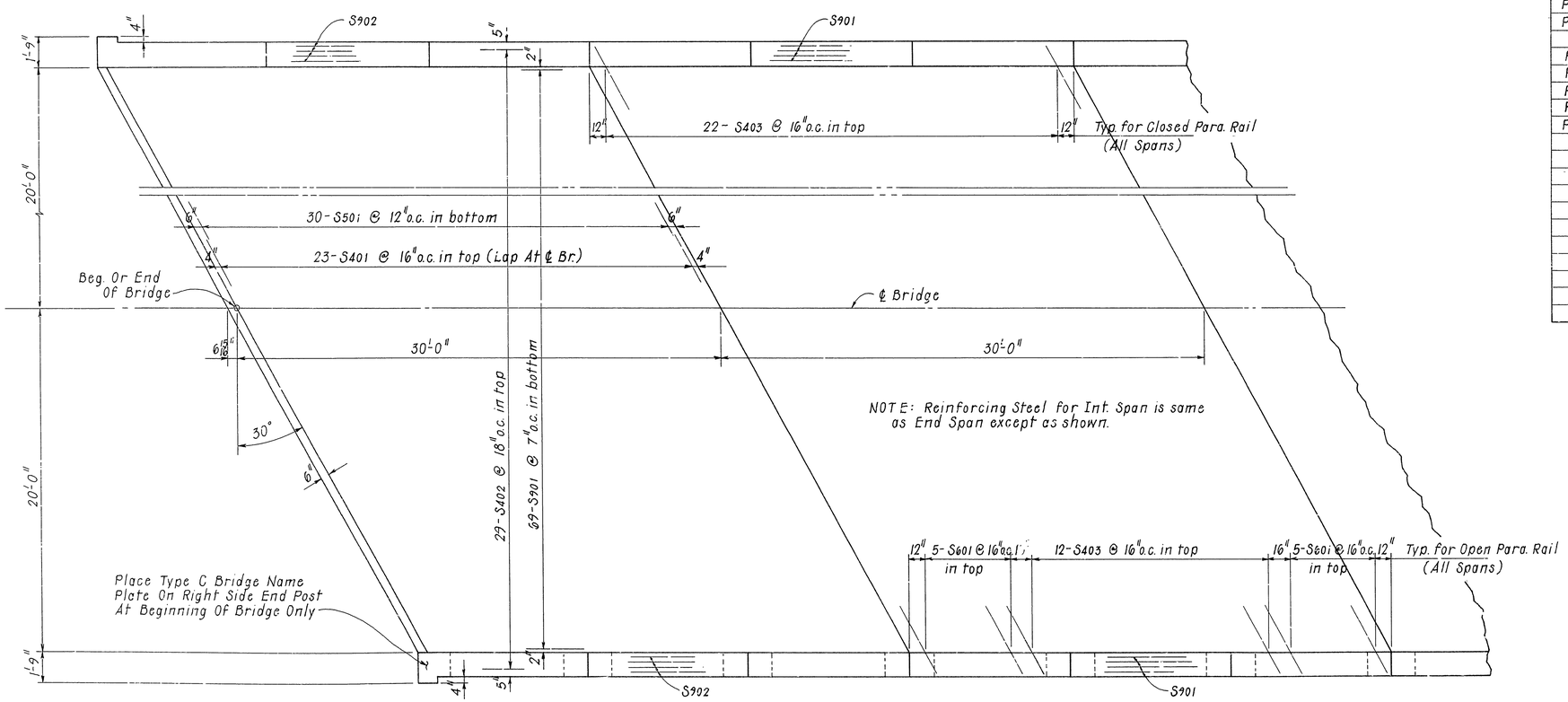

PLAN

$\frac{1}{4}$" = 1'-0"

BAR LIST - EACH SPAN

MK.	No. Required End	No. Required Int.	Length	Pin Dia.
S901	69	77	29'-8"	Str.
S902	8	-	30'-2"	Str.
S601	10	10	7'-11"	4½"
S501	30	30	49'-0"	Str.
S401	46	46	25'-4"	Str.
S402	29	29	29'-8"	Str.
S403	34	34	4'-4"	Str.
P401	51	54	7'-4"	2"
P402	22	24	6'-10"	2"
P403	21	21	6'-4"	2"
P404	21	21	3'-2"	2"
P405	20	30	9'-8"	Str.
P406	29	30	5'-6"	2"
P407	3	-	9'-2"	Str.
P408	7	-	10'-2"	Str.
P409	10	-	1'-0"	Str.
P601	8	12	9'-8"	Str.
P602	2	-	9'-2"	Str.
P603	2	-	10'-2"	Str.
P604	6	-	4'-7"	3¾"
P605	4	-	8'-4"	3¾"

Bending Diagrams (Dimens. are out to out of bars)

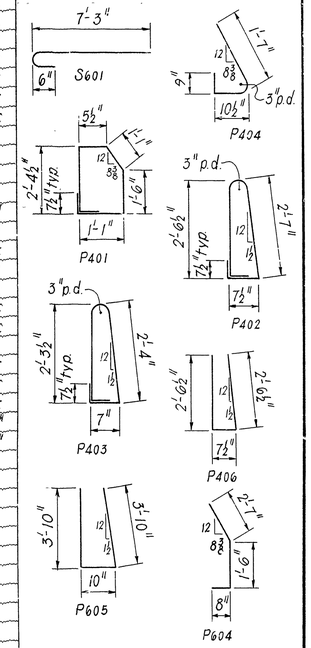

GENERAL NOTES

ALL EXPOSED CORNERS TO BE CHAMFERED 3/4" UNLESS OTHERWISE NOTED.

BAR SUPPORTS FOR REINFORCING BARS WILL NOT BE PAID FOR DIRECTLY, BUT WILL BE CONSIDERED SUBSIDIARY TO THE ITEM "REINFORCING STEEL."

ROOFING FELT, BITUMINOUS FELT, PREFORMED JOINT, AND POURED JOINTS SHALL BE MEASURED AND PAID FOR AS CLASS S(AE) CONCRETE.

SPECIFICATIONS: ARKANSAS STATE HIGHWAY COMMISSION STANDARD SPECIFICATIONS FOR HIGHWAY CONSTRUCTION, EDITION OF 1978 AND APPLICABLE SPECIAL PROVISIONS.

DESIGN SPECIFICATIONS: AASHTO STANDARD SPECIFICATIONS FOR HIGHWAY BRIDGES, 1983.

LIVE LOAD: HS20

METHOD OF DESIGN: LOAD FACTOR

LOAD DISTRIBUTION TO SLAB: DEAD LOAD: 282 PSF
LIVE LOAD: .17% WHEELS/FT. OF WIDTH PLUS 30% IMPACT

CONCRETE: ALL CONCRETE SHALL BE CLASS S(AE) WITH A MINIMUM 28 DAY COMPRESSIVE STRENGTH f'c = 3500 PSI.

REINFORCING STEEL: REINFORCING STEEL SHALL CONFORM TO ASTM A615 OR A617, GRADE 60 (YIELD STRENGTH = 60,000 PSI).

SHEET 1 OF 2

DETAILS OF 30'-0" R.C. SLAB SPANS
SO. FORK SALINE RIVER

ROUTE SEC.

ARKANSAS STATE HIGHWAY COMMISSION

LITTLE ROCK, ARK.

DRAWN BY: H. Alaz. DATE: 2-26-85
CHECKED BY: HJD DATE: 3-7-85
DESIGNED BY: MRJ DATE: 12-27-85
SCALE: As Shown

Kirsal Pinkston
BRIDGE ENGINEER

BRIDGE NO. 6126

DRAWING NO. 27316

204

DATE REVISED	DATE FILMED	DATE REVISED	DATE FILMED	FED. ROAD NO.	STATE	FED. AID PROJ. NO.	SHEET NO.	TOTAL SHEETS
4-9-86	524-4-76			6	ARK.			
7-16-86	764-7-15-86			JOB NO.		60297	37	89
				1 6126		SPAN	27317	

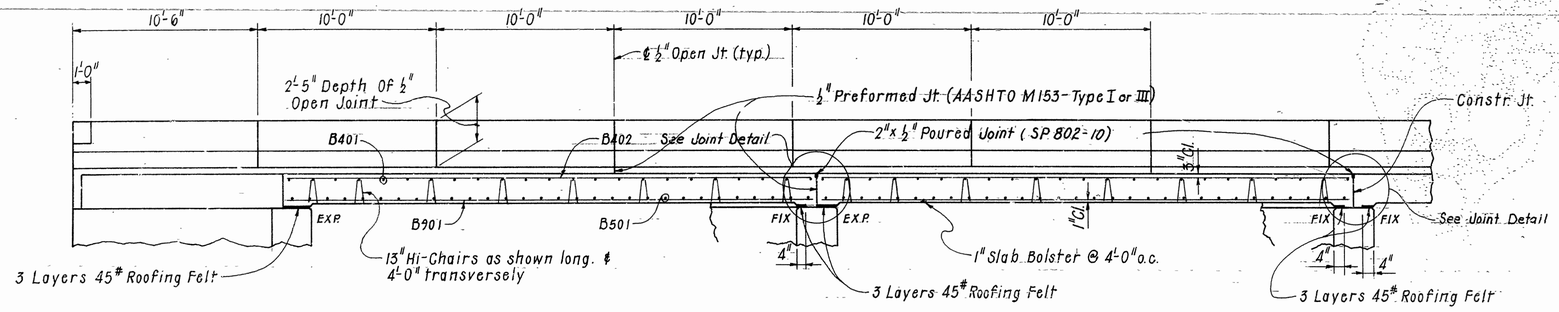

LONGITUDINAL SECTION AT ℄ BRIDGE
¼" = 1'-0"

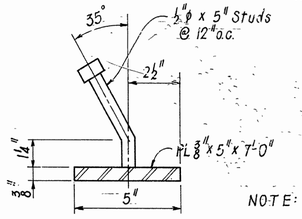

DETAIL A
N.T.S.

NOTE: The surface of the ⅜" PL which will not be in contact with concrete shall receive two coats of paint in the shop. These coats shall be those specified as First Shop Coat & Second Field Coat in Subsection 807.59(a) & 807.59(c) & SP 807-10. Structural Steel shall meet the requirements of Section 807 except as noted. Studs shall be 5" long, granular flux filled, solid fluxed or equal & automatically end welded to plate. Studs & Plate to be measured and paid for as Class S(AE) Concrete.

NOTE: 141# Str. Steel (Each Span)

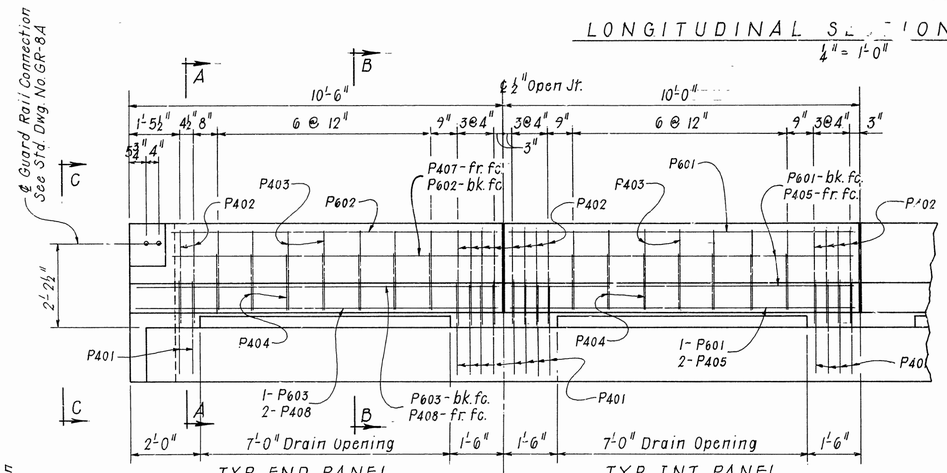

TYP. END PANEL — TYP. INT. PANEL

LONGITUDINAL SECTION AT CURB (OPEN PARAPET)
½" = 1'-0"

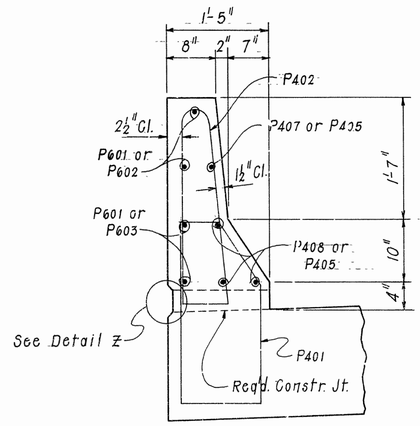

SECTION A-A
1" = 1'-0"

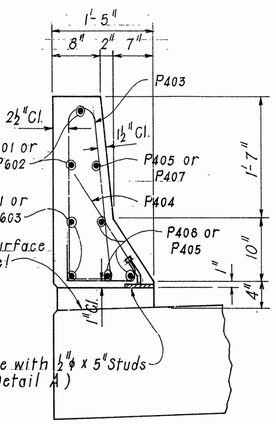

SECTION B-B
1" = 1'-0"

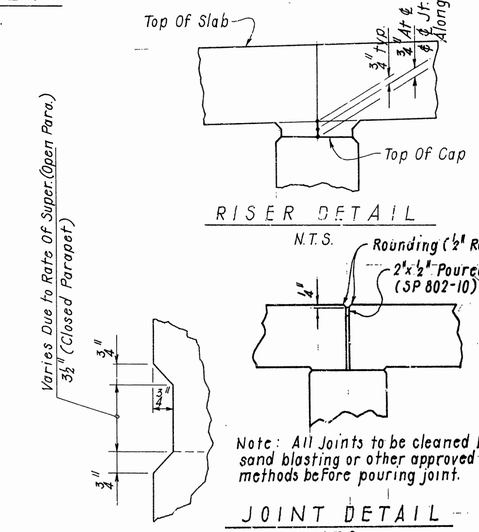

RISER DETAIL
N.T.S.

DETAIL Z
N.T.S.

JOINT DETAIL
N.T.S.

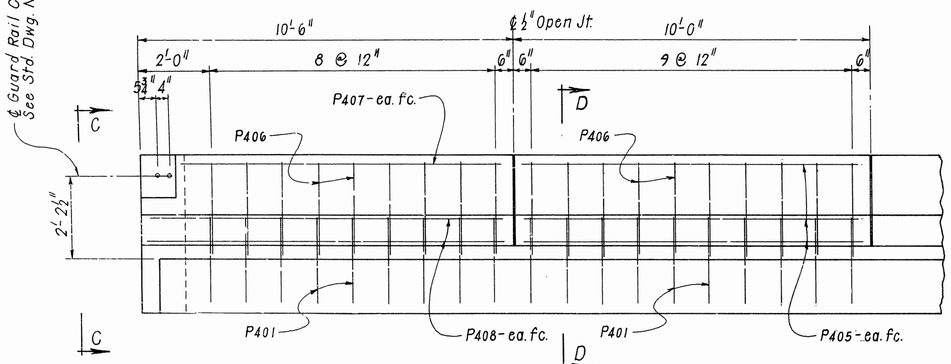

TYP. END PANEL — TYP. INT. PANEL

LONGITUDINAL SECTION AT CURB (CLOSED PARAPET)
½" = 1'-0"

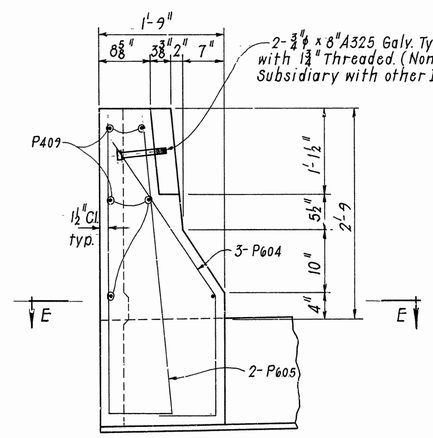

VIEW C-C
1" = 1'-0"

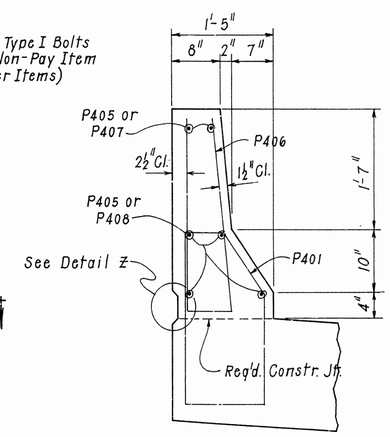

SECTION D-D
1" = 1'-0"

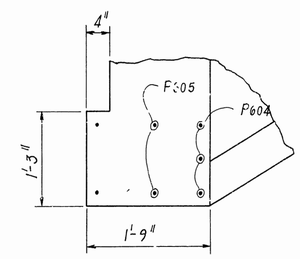

SECTION E-E
1" = 1'-0"

DEAD LOAD DEFLECTION

Variable	a	b
Immediate	1/8" 1/16"	1/8"
Long Term	1/8" 3/16"	3/16"
Total Deflection	1/4"	5/16"

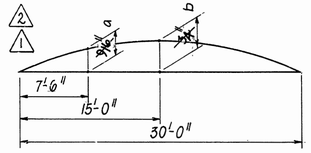

DEAD-LOAD CAMBER DIAGRAM
N.T.S.

1 Revised Deflections 4-9-86, D.H.P.

2 Revised Deflections f'c = 4439 p.s.i. 7-16-86, D.H.P.

SHEET 2 OF 2

DETAILS OF 30' R.C. SLAB SPANS
SO. FORK SALINE RIVER

ROUTE SEC.

ARKANSAS STATE HIGHWAY COMMISSION
LITTLE ROCK, ARK.

DRAWN BY: W. Maj. DATE: 2-25-85
CHECKED BY: HLD DATE: 3-7-85
DESIGNED BY: MRJ DATE: 12-27-85
SCALE: As Shown

Vesal Pinkerton
BRIDGE ENGINEER

BRIDGE NO. 6126 DRAWING NO. 27317