DATE REVISED	DATE FILMED	DATE REVISED	DATE FILMED	FED. ROAD DIST. NO.	STATE	FED. AID PROJ. NO.	SHEET NO.	TOTAL SHEETS
				6	ARK.			
				JOB NO.		B60120	312	502
				1		D6357 Layout 43940		

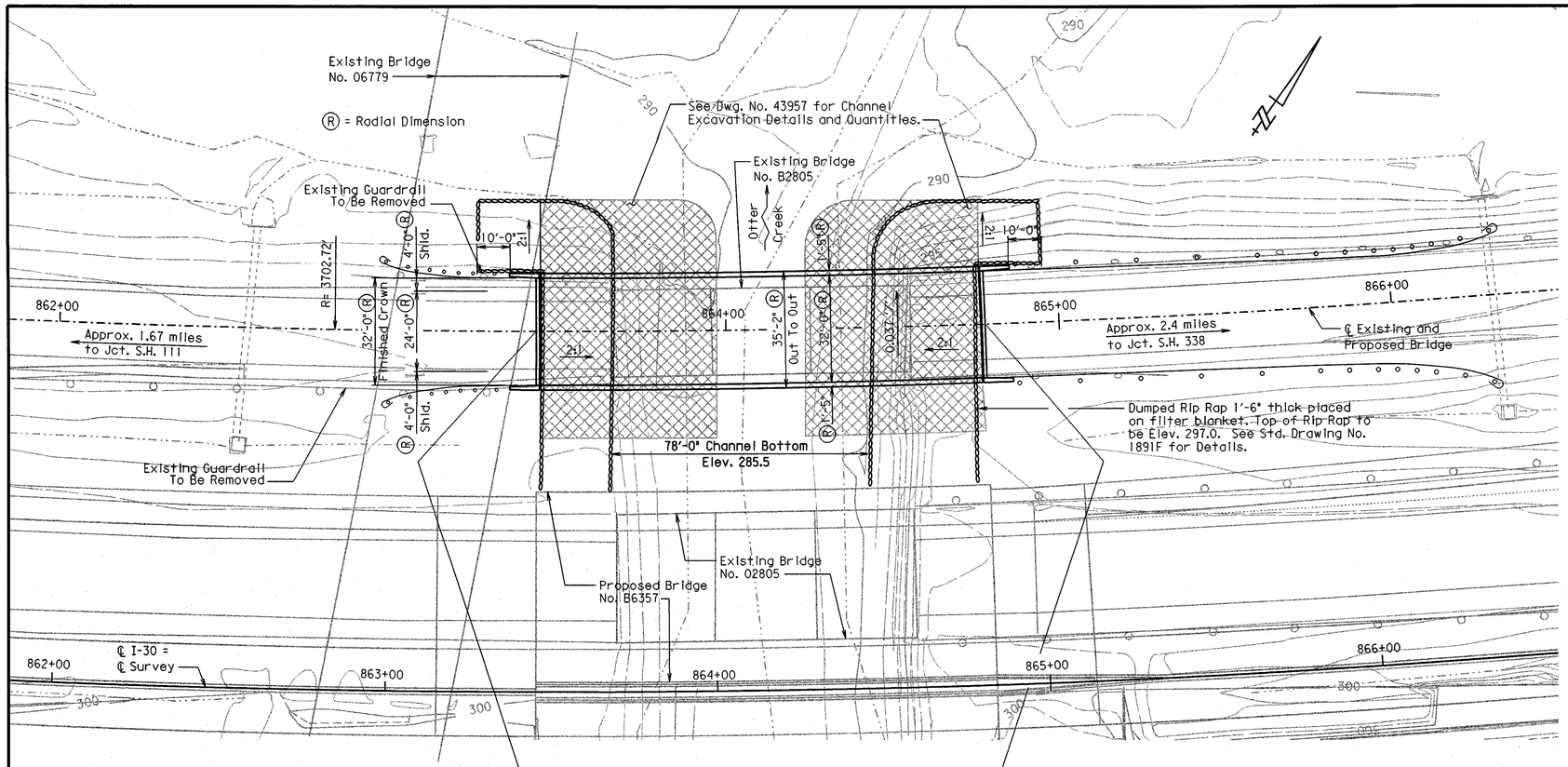

PLAN

Note: All beams shall be placed parallel to chord constructed from intersection of C.L. bridge and C.L. joint end bent 1 to intersection of C.L. bridge and C.L. joint end bent 6.

Note: Begin and end bridge, and bents are radial lines.

℄ DECK ELEV. 300.80 - LEVEL GRADE

Note: For R/W Data and Guard Rail Details, See Roadway Plans.

Use Type B Approach Gutters. See Std. Drawing No. 2016B.

WB FRONTAGE RD. CURVE DATA

(Along ℄ Existing and Proposed Bridge)

P.I.	858+92.96
△	28°22'00" Lt.
D	1°32'51"
R	3702.72'
L	1833.19'
T	935.79'
P.C.	849+57.17
P.T.	867+90.36

℄ I-30 CURVE DATA

P.I.	859+96.60
△	31°58'34" Lt.
D	1°30'
R	3819.71'
L	2131.74'
T	1094.42'
P.C.	849+02.18
P.T.	870+33.92

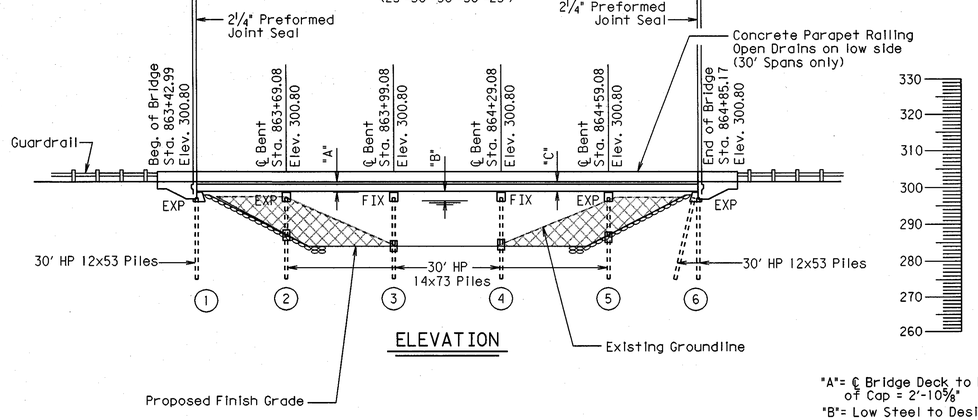

ELEVATION

"A"= ℄ Bridge Deck to Low Seat of Cap = 2'-10⅝"

"B"= Low Steel to Design H.W. =1.3'

"C"= ℄ Bridge Deck to Low Steel = 2'-7¾"

HYDRAULIC DATA

FLOOD DESCRIPTION	FREQUENCY	DISCHARGE	** NATURAL WATER SURFACE ELEVATION	WATER SURFACE ELEV. WITH BACKWATER
	YEARS	CFS	FEET	FEET
Design	50	6450	295.6	296.8
Base	100	7720	296.2	297.7
Overtopping	***	-	-	-

** Unconstricted water surface without structure or roadway approaches.
Drainage area = 12.1 square miles.
Historical H.W. Elev. = 300.1 (Sept. 1978)

*** Frequency > 500 yrs.

GENERAL NOTES

BENCH MARK: TBM-966 RR Spk. In CP East Side Rd. South Of Service Rd. Elev. = 294.29

CONSTRUCTION SPECIFICATIONS: Arkansas State Highway and Transportation Department Standard Specifications for Highway Construction (1996 Edition) with applicable supplemental specifications and special provisions.

DESIGN SPECIFICATIONS: AASHTO Standard Specifications for Highway Bridges (1996 Edition) with current interim specifications.

SEISMIC PERFORMANCE CATEGORY: A

LIVE LOADING: HS20 **METHOD OF DESIGN:** Load Factor

MATERIALS AND STRENGTHS:

Class S(AE) Concrete (Superstructure)	f'c = 4,000 psi
Class S Concrete (Substructure)	f'c = 3,500 psi
Reinforcing Steel (AASHTO M31 or M53, Gr. 60)	Fy = 60,000 psi
Structural Steel (AASHTO M 270, Gr. 50W)	Fy 50,000 psi

BORING LOGS: Boring Logs may be obtained from the Programs and Contracts Division.

STEEL PILING: Piles in end bents shall be HP 12 x 53. Piles in Int. Bents 2 -5 shall be HP 14x73. All piles shall be driven with an approved air, steam, or diesel hammer with a total energy developed of 20,000 ft.-lbs. to a minimum safe bearing capacity of 60 tons per pile and to a minimum required tip elevation of 266.00 for all bents. Lengths of piling shown are for estimating only. Actual lengths to be determined in the field. No additional payment will be made for cut-off and build-up. Test piles are not required, but may be driven for the Contractor's information in accordance with subsection 805.08 (g). Piles in end bents to be driven after embankment to bottom of cap is in place. On all piles the contractor shall use approved steel H-piles driving points.

PREBORING: Preboring to elevation 266.00 for all bents will be required before driving the first pile in each bent. The Engineer shall consider the field conditions in determining the necessity and depth of preboring required for the remaining piles in each bent.

PILE ENCASEMENT: Pile Encasement for Bents 2, 3, 4, and 5 shall extend 3' into the ground and a minimum of 2' above ground line. See Drawing Number 14995A for additional information.

BRIDGE DECK: The concrete deck shall be given a tine finish as specified for final finishing in subsection 802.19 for Class 5 Tined Bridge Roadway Surface Finish.

REMOVAL AND SALVAGE: Existing Bridge No. B2805 shall be removed in accordance with Section 205 of the Standard Specifications, with the addition that piles at existing intermediate bents be pulled if there is a conflict with the new piles. All material from existing bridge shall become the property of the Contractor.

EXISTING BRIDGE: Existing Bridge No. B2805 is 31.50' wide and 90' long, consisting of reinforced concrete slab span superstructure. The substructure consists of concrete end bents with steel piling and concrete intermediate bents with steel piling. Plans for existing bridge will be made available to the Contractor upon request to Programs and Contracts Division. Existing Dwg. No. 9277, 5407A, &5407B.

MAINTENANCE OF TRAFFIC: See Roadway Plans for maintenance of traffic.

DETAIL DRAWINGS:	DRAWING NO.
Bridge Layouts	43940-43941
End Bents	43942-43944
Intermediate Bents	43945-
140' Cont. W-Beam	43946-43952
Bearing Assembly & Joint Seal	43953
Steel Piling	14995A
Type B Approach Gutters	2016B

STATE OF ARKANSAS
REGISTERED PROFESSIONAL ENGINEER
No. 10269
HOLMES W. CLEMENTS, III

Holmes W. Clements III
4-30-02
BRIDGE ENGINEER

LAYOUT OF
WB FRONTAGE RD. OVER OTTER CREEK
WEST OF PULASKI COUNTY LINE - I-430 (F)
PULASKI COUNTY

ROUTE 30 SEC. 23

ARKANSAS STATE HIGHWAY COMMISSION

LITTLE ROCK, ARK.

DRAWN BY:	CCK	DATE:	4-20-02	FILENAME:	BB60120X8.L1
CHECKED BY:	DPD	DATE:	4-20-02	SCALE:	1"=20'-0"
DESIGNED BY:	CCK	DATE:	9-06-01		

BRIDGE NO. D6357 DRAWING NO. 43940

30-APR-2002
L:\RS060300\WB Front Otter\ppe.dgn

DATE REVISED	DATE FILMED	DATE REVISED	DATE FILMED	FED. ROAD DIST. NO.	STATE	FED. AID PROJ. NO	SHEET NO.	TOTAL SHEETS
				6	ARK.			
				JOB NO.		B60120	313	502

1 D6357 Boring Layout 43941

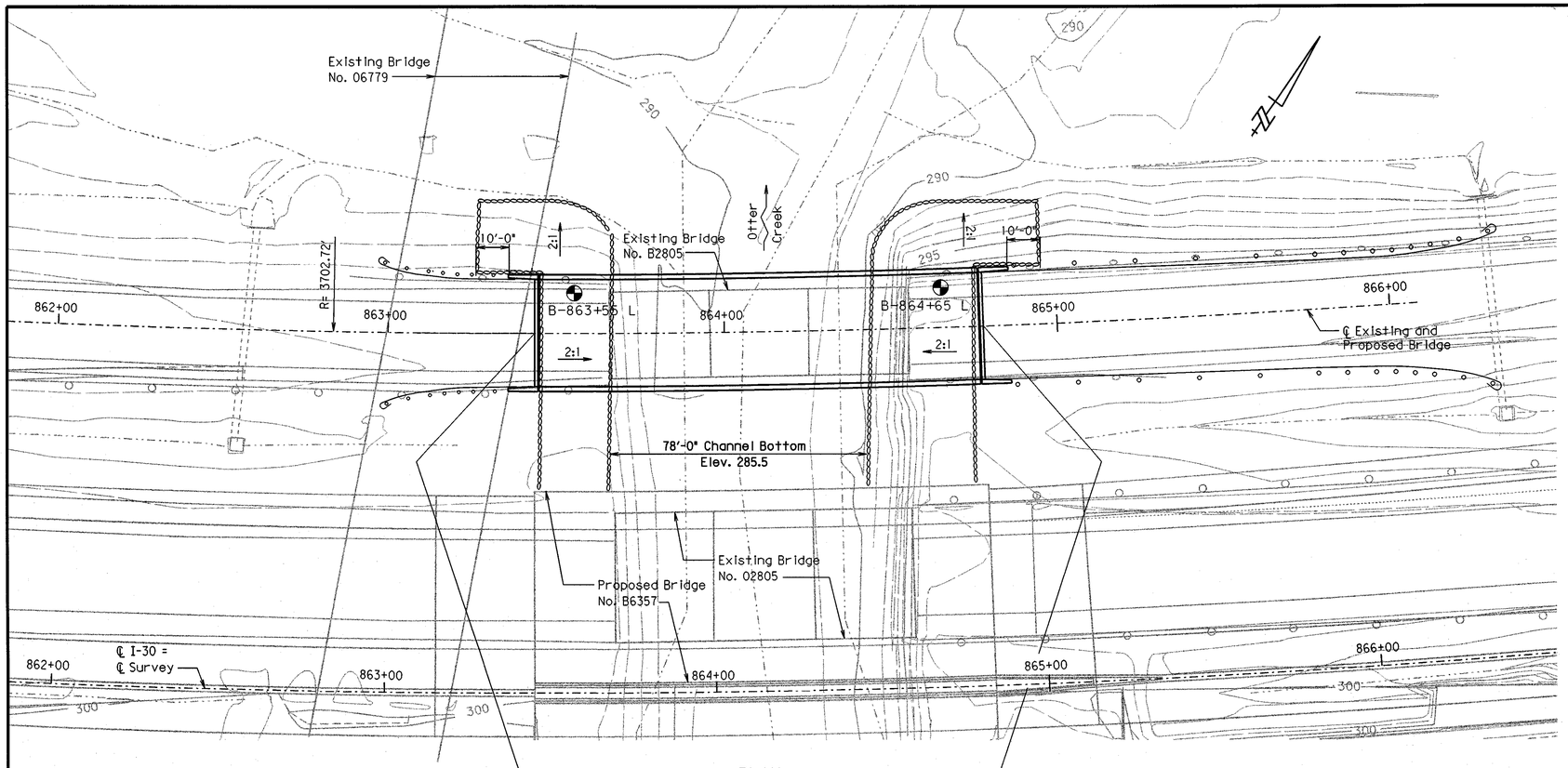

PLAN

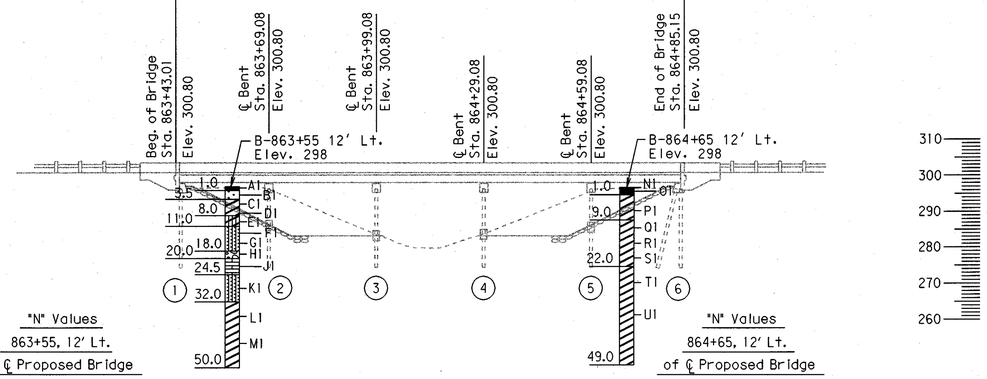

ELEVATION

"N" Values
863+55, 12' Lt.
of ℄ Proposed Bridge

6.5 - 7.5 N=9
19.0 - 19.9 N=50(11")
22.5 - 22.5 N=25(0")
24.0 - 25.0 N=17
29.5 - 30.5 N=30
34.0 - 34.7 N=50(8")
39.0 - 39.3 N= 50(3")
44.0 - 44.1 N=50(1")
49.0 - 49.9 N=50(11")

"N" Values
864+65, 12' Lt.
of ℄ Proposed Bridge

2.5 - 3.5 N=12
14.0 - 15.0 N=10
19.0 - 19.1 N=50(1")
23.0 - 23.3 N=50(3")
28.0 - 28.3 N=50(4")
34.0 - 35.0 N=44
39.0 - 39.8 N=50(10")
44.0 - 44.6 N= 50(7")
48.0 - 48.3 N= 50(4")

862+00 863+00 864+00 865+00 866+00

Boring Locations.

BORING LEGEND

A1 - Asphalt
B1 - Crushed stone and sandstone gravel and cobbles (fill)
C1 - Firm brown and tan fine sandy clay w/some crushed stone (fill)
D1 - C1, soft to firm below 6 ft
E1 - Firm gray and brown silty clay, slightly sandy
F1 - Loose to medium dense gray and tan silty fine sand w/some fine sandy clay seams
G1 - F1, w/numerous clay seams below 14.5 ft
H1 - Dense gray fine to coarse quartz gravel
J1 - Soft to medium soft gray weathered limestone
K1 - Medium dense bluish gray silty fine sand
L1 - Hard dark gray clay w/shells and shell fragments
M1 - L1, coral seams at 40.5, 41.5, 42.5 and 43.5 ft
N1 - Asphalt pavement
O1 - A1, 6 inches Donna fill and aggregate base
P1 - Firm to stiff gray and tan fine sandy clay
Q1 - Soft to firm gray and tan fine sandy clay w/ some decayed woods
R1 - Q1, firm to stiff w/numerous silty fine sand seams and pockets below 14 ft
S1 - Q1, w/some fine quartz gravel below 17 ft.
T1 - Hard dark gray clay w/some limestone seams and layers, fossiliferous
U1 - T1, w/numerous fine sand seams and pockets at 34 to 35 ft

STATE OF ARKANSAS
REGISTERED PROFESSIONAL ENGINEER
No. 10269
HOLMES W. CLEMENTS, III
3-20-02
BRIDGE ENGINEER

BORING INFORMATION
WB FRONTAGE RD. OVER OTTER CREEK
WEST OF PULASKI COUNTY LINE - I-430
PULASKI COUNTY

ROUTE 30 SEC. 23

ARKANSAS STATE HIGHWAY COMMISSION

LITTLE ROCK, ARK.

DRAWN BY: CAB DATE: 3-12-02 FILENAME: BB60120X8.bor
CHECKED BY: HWC DATE: 3-12-02 SCALE: 1"=20'-0"
DESIGNED BY: KBH DATE: 11-30-01

BRIDGE NO. D6357 DRAWING NO. 43941

20-MAR-2002
L:\Rs060300\WB Front Otter\boring.dgn

DATE REVISED	DATE FILMED	DATE REVISED	DATE FILMED	FED. ROAD DIST. NO.	STATE	FED. AID PROJ. NO.	SHEET NO.	TOTAL SHEETS
				6	ARK.			
				JOB NO.		B60120	314	502
				1	D6357 End Bent Details 43942			

Note:
Class 1 Protective Surface Treatment shall be applied to the Roadway Face, Top of End Bent Rail and the top of the Backwall.

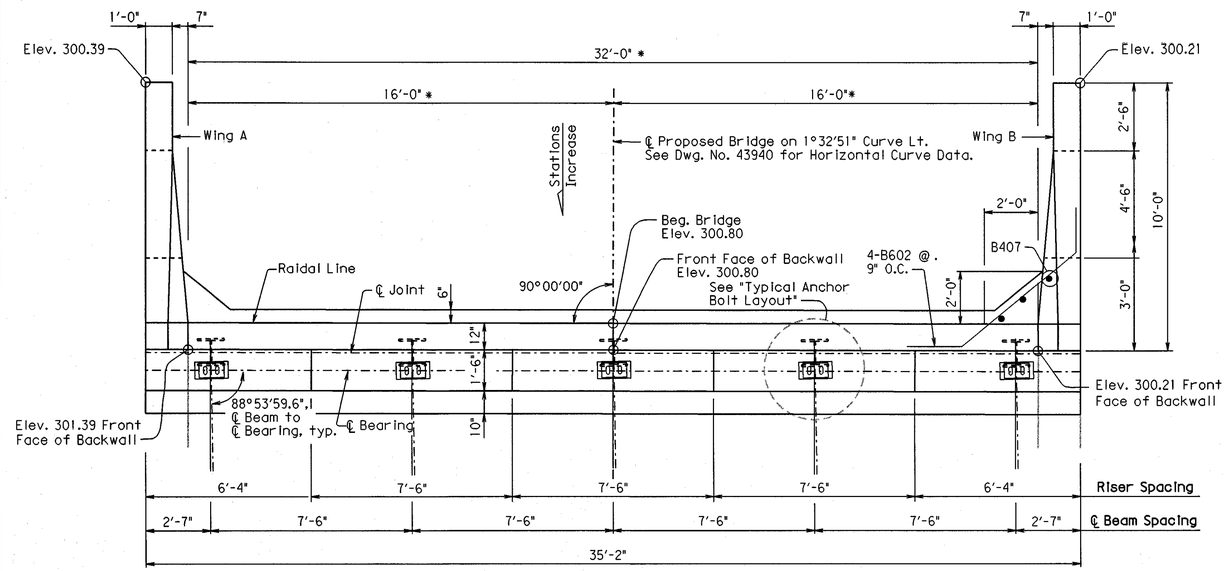

PLAN
Scale: 1/4" = 1'-0"

* Measured along back face of endwall

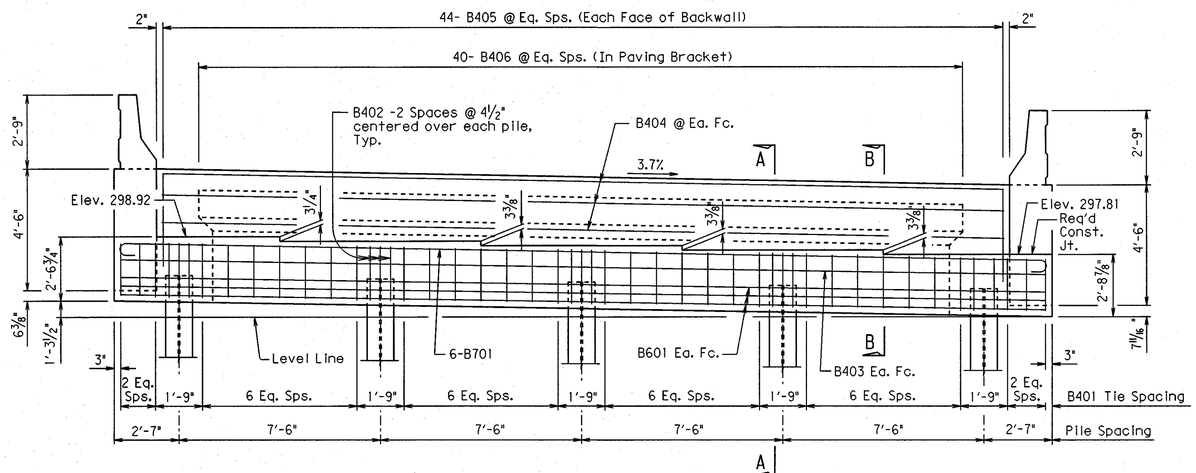

ELEVATION (Looking Back)
Scale: 1/4" = 1'-0"

GENERAL NOTES

All concrete shall be Class "S" with a minimum 28 day compressive strength f'c= 3,500 psi. Concrete shall be poured in the dry and all exposed corners to be chamfered 3/4" unless otherwise noted.

All Reinforcing steel shall conform to AASHTO M31 or M53, Grade 60 (yield strength = 60,000 psi).

Backwall shall not be poured before beams are in place, and concrete deck is poured.

Structural Steel in end bents shall be AASHTO M270, Gr. 50W and paid for as "STRUCTURAL STEEL IN BEAM SPANS (M270, Gr 50W)".

Top reinforcing bars in cap shall be properly placed to avoid interference with anchor bolts.

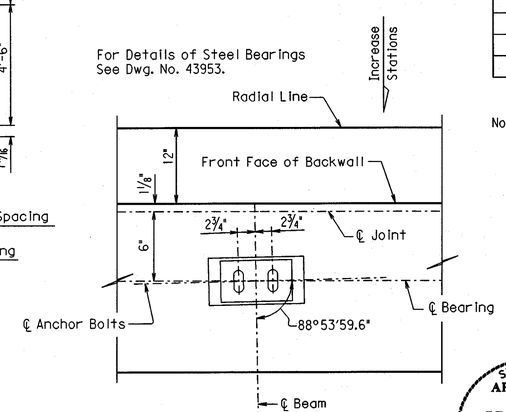

TYPICAL ANCHOR BOLT LAYOUT
No Scale

BAR LIST- END BENT 1

MARK	NO. REQ'D.	LENGTH	P.D.
B401	34	10'-0"	2"
B402	15	6'-6"	2"
B403	2	34'-10"	str.
B404	6	34'-10"	str.
B405	88	3'-6"	str.
B406	40	3'-9"	2"
B407	6	3'-10"	str.
B601	6	34'-10"	str.
B602	8	7'-5"	4 1/2"
B701	6	36'-6"	5 1/4"
R401	8	3'-11"	2"
R402	8	4'-0"	2"
R403	12	9'-8"	str.
R601	16	4'-5"	str.
R602	6	5'-0"	str.
W401	6	5'-9"	2"
W402	6	6'-11"	str.
W403 - W407	2 Each	3'-4" to 5'-4"	2"
W408- W412	2 Each	4'-6" to 6'-6"	str.
W701	12	9'-8"	str.
W702	4	6'-1"	str.
W703	4	4'-5"	str.
W704	4	3'-5"	str.
W705	4	8'-7"	5 1/4"

BENDING DIAGRAMS
Dimensions are out to out of bars.

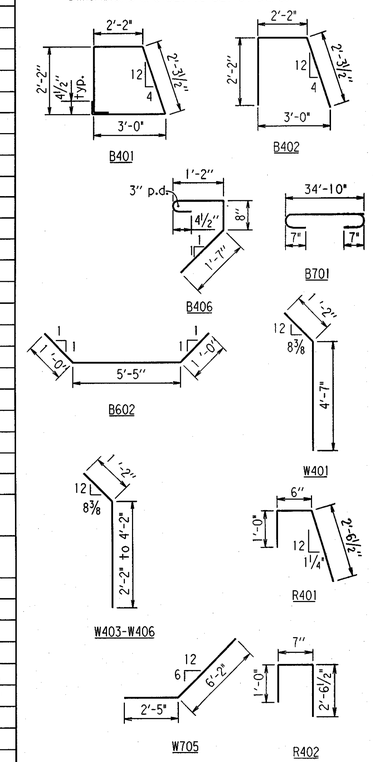

Note: For Details of Wing Rail See Dwg. No. 43944.

\# 4 bars lapped @ 1'-8"
\# 6 bars lapped @ 2'-7"
\# 7 bars lapped @ 3'-5"

STATE OF ARKANSAS
REGISTERED PROFESSIONAL ENGINEER
No. 10269
JAMES W. CLEMENTS, III

4-30-02
BRIDGE ENGINEER

SHEET 1 OF 3
DETAILS OF END BENT 1
WB FRONTAGE RD. OVER OTTER CREEK
WEST OF PULASKI COUNTY LINE - I-430
PULASKI COUNTY

ROUTE 30 SEC. 23
ARKANSAS STATE HIGHWAY COMMISSION
LITTLE ROCK, ARK.

DRAWN BY:	CAB	DATE:	4-20-02	FILENAME:	BB60120X8.B1
CHECKED BY:	RTP	DATE:	4-20-02	SCALE:	As Shown
DESIGNED BY:	AS	DATE:	2-20-02		

BRIDGE NO. D6357 DRAWING NO. 43942

30-APR-2002
L:\s060300\WB Front Otter\eb1.dgn

DATE REVISED	DATE FILMED	DATE REVISED	DATE FILMED	FED. ROAD DIST. NO.	STATE	FED. AID PROJ. NO.	SHEET NO.	TOTAL SHEETS
				6	ARK.			
				JOB NO.		B60120	315	502

1 D6357 End Bent Details 43943

Note:
Class I Protective Surface Treatment shall be applied to the Roadway Face, Top of End Bent Rail and the top of the Backwall.

* Measured along back face of endwall.

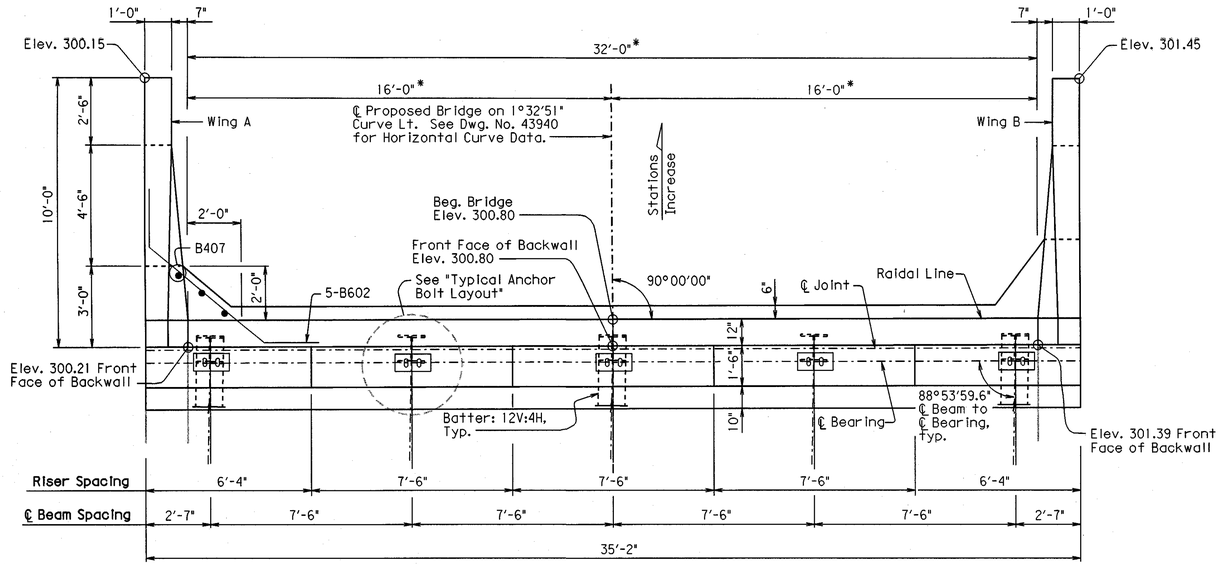

PLAN

Scale: 1/4" = 1'-0"

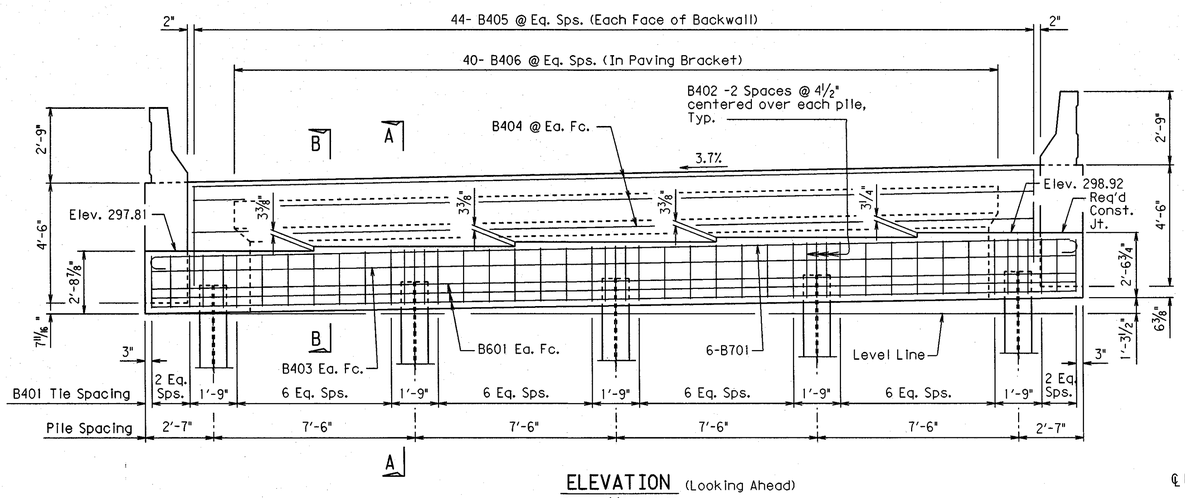

ELEVATION (Looking Ahead)

Scale: 1/4" = 1'-0"

GENERAL NOTES

All concrete shall be Class "S" with a minimum 28 day compressive strength f'c= 3,500 psi. Concrete shall be poured in the dry and all exposed corners to be chamfered ¾" unless otherwise noted.

All Reinforcing steel shall conform to AASHTO M31 or M53, Grade 60 (yield strength = 60,000 psi).

Backwall shall not be poured before beams are in place, and concrete deck is poured.

Structural Steel in end bents shall be AASHTO M270, Gr. 50W and paid for as "STRUCTURAL STEEL IN BEAM SPANS (M270, Gr 50W)".

Top reinforcing bars in cap shall be properly placed to avoid interference with anchor bolts.

For Details of Steel Bearings See Dwg. No. 43953.

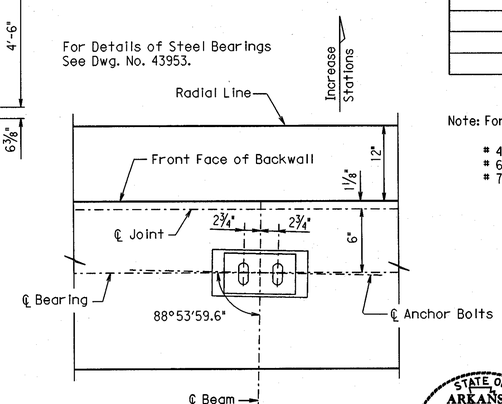

TYPICAL ANCHOR BOLT LAYOUT

No Scale

BAR LIST- END BENT 6

MARK	NO. REQ'D.	LENGTH	P.D.
B401	34	10'-0"	2"
B402	15	6'-6"	2"
B403	2	34'-10"	str.
B404	6	34'-10"	str.
B405	88	3'-6"	str.
B406	40	3'-9"	2"
B407	6	3'-10"	str.
B601	6	34'-10"	str.
B602	8	7'-5"	4½"
B701	6	36'-6"	5¼"
R401	8	3'-11"	2"
R402	8	4'-0"	2"
R403	12	9'-8"	str.
R601	16	4'-5"	str.
R602	6	5'-0"	str.
W401	6	5'-9"	2"
W402	6	6'-11"	str.
W403 - W407	2 Each	3'-4" to 5'-4"	2"
W408- W412	2 Each	4'-6" to 6'-6"	str.
W701	12	9'-8"	str.
W702	4	6'-1"	str.
W703	4	4'-5"	str.
W704	4	3'-5"	str.
W705	4	8'-7"	5¼"

BENDING DIAGRAMS

Dimensions are out to out of bars.

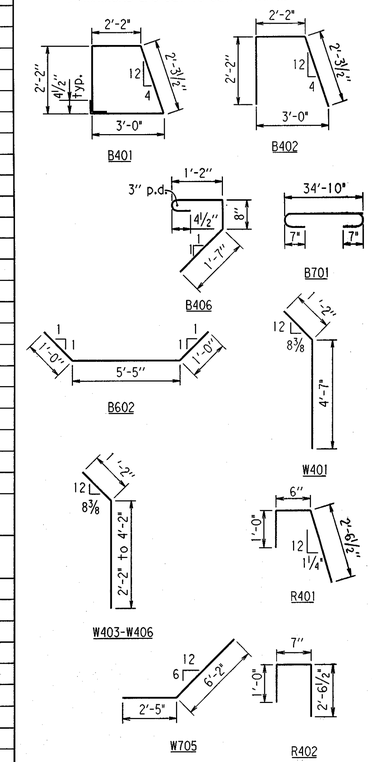

Note: For Details of Wing Rail See Dwg. No. 43944.

4 bars lapped @ 1'-8"
6 bars lapped @ 2'-7"
7 bars lapped @ 3'-5"

STATE OF ARKANSAS
REGISTERED PROFESSIONAL ENGINEER
No. 10269
HOLMES W. CLEMENTS, III

4-30-02

BRIDGE ENGINEER

SHEET 2 OF 3

DETAILS OF END BENT 6

WB FRONTAGE RD. OVER OTTER CREEK

WEST OF PULASKI COUNTY LINE - I-430

PULASKI COUNTY

ROUTE 30 SEC. 23

ARKANSAS STATE HIGHWAY COMMISSION

LITTLE ROCK, ARK.

DRAWN BY:	CAB	DATE:	4-20-02	FILENAME:	BB60120X8.B6
CHECKED BY:	RTP	DATE:	4-20-02	SCALE:	As Shown
DESIGNED BY:	AS	DATE:	2-20-02		

BRIDGE NO. D6357 DRAWING NO. 43943

30-APR-2002
L:\B60300\WB Front Otter\eb6.dgn

DATE REVISED	DATE FILMED	DATE REVISED	DATE FILMED	FED. ROAD DIST. NO.	STATE	FED. AID PROJ. NO.	SHEET NO.	TOTAL SHEETS
				6	ARK.			
				JOB NO.		B60120	316	502

1 D6357 End Bent Details 43944

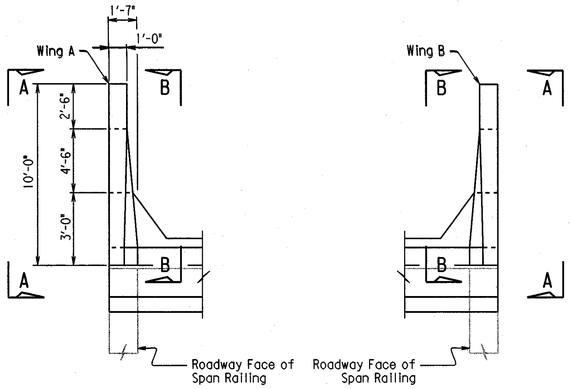

PLAN OF RAIL
No Scale

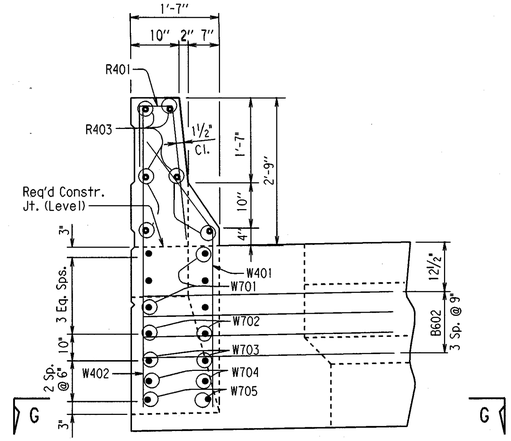

VIEW D-D (WING A)
No Scale

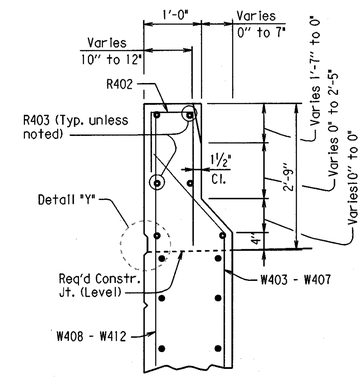

SECTION E-E (WING A)
Scale: ¾" = 1'-0"

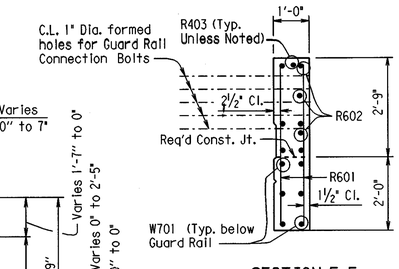

SECTION F-F
Scale: ½" = 1'-0"

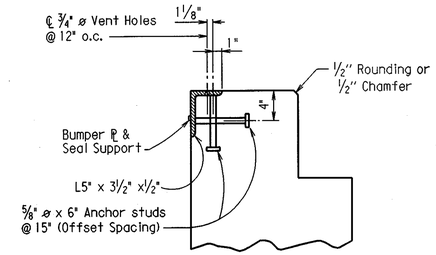

For additional details, See Dwg. No. 43953.

DETAIL Z
No Scale

Note: Concrete Shall be hand packed under the Joint Armor In the Backwall.

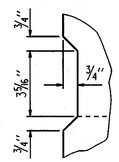

DETAIL Y
No Scale

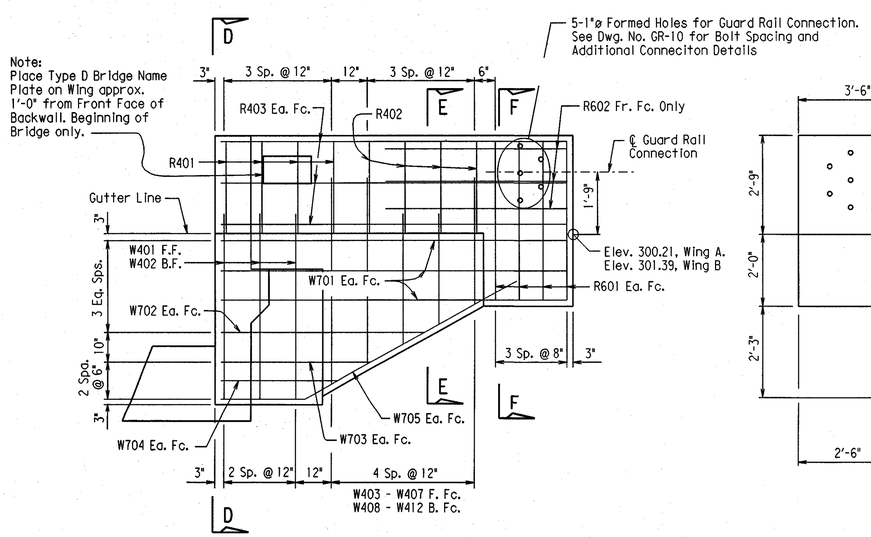

VIEW B-B
Scale: ½" = 1'-0"

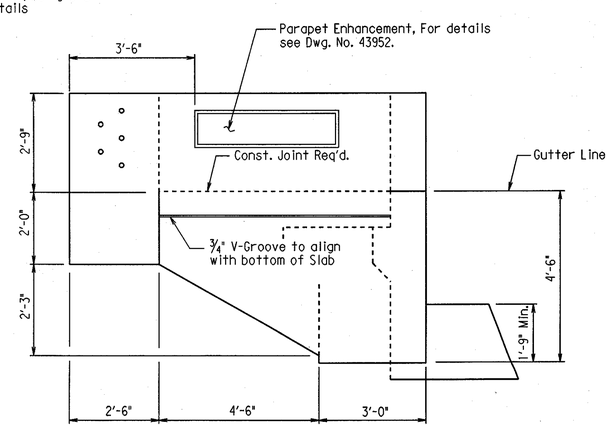

VIEW A-A
Scale: ½" = 1'-0"

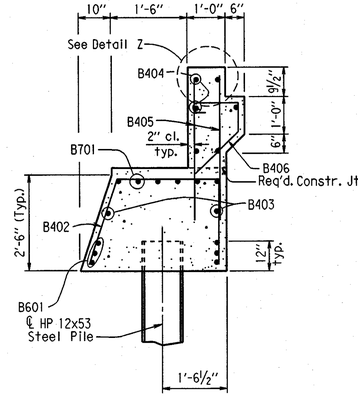

SECTION A-A
No Scale

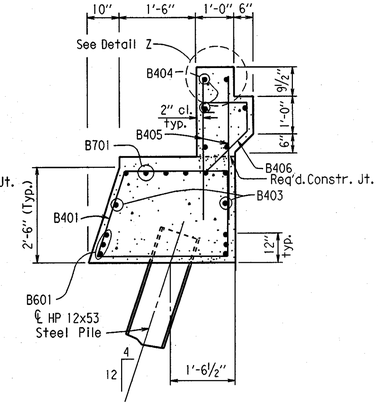

SECTION B-B
No Scale

STATE OF ARKANSAS
REGISTERED PROFESSIONAL ENGINEER
No. 10269
HOLMES W. CLEMENTS, III

4-30-02
BRIDGE ENGINEER

SHEET 3 OF 3
END BENT DETAILS
WB FRONTAGE RD. OVER OTTER CREEK
WEST OF PULASKI COUNTY LINE - I-430
PULASKI COUNTY

ROUTE 30 SEC. 23
ARKANSAS STATE HIGHWAY COMMISSION
LITTLE ROCK, ARK.

DRAWN BY:	CAB	DATE:	4-20-02	FILENAME:	BB60120X8.Bdet
CHECKED BY:	RTP	DATE:	4-20-02	SCALE:	As shown
DESIGNED BY:	AS	DATE:	2-20-02		

BRIDGE NO. D6357 DRAWING NO. 43944

LRS0603008WB Front Otter Bentdet.dgn 30-APR-2002

DATE REVISED	DATE FILMED	DATE REVISED	DATE FILMED	FED. ROAD DIST. NO.	STATE	FED. AID PROJ. NO.	SHEET NO.	TOTAL SHEETS
				6	ARK.			
				JOB NO.		B60120	317	507

1 D6357 Bent Details 43945

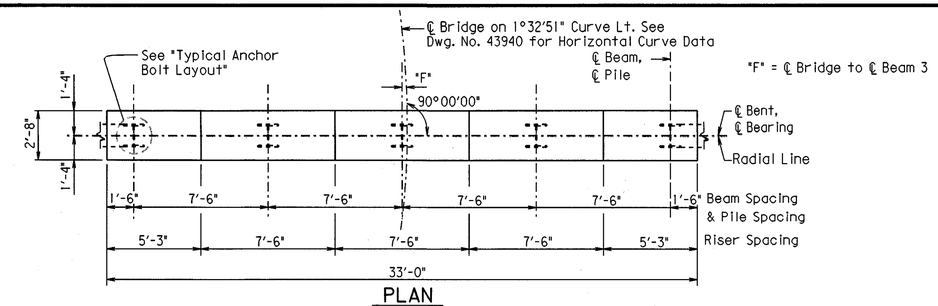

PLAN

Scale: 1/4" = 1'-0"

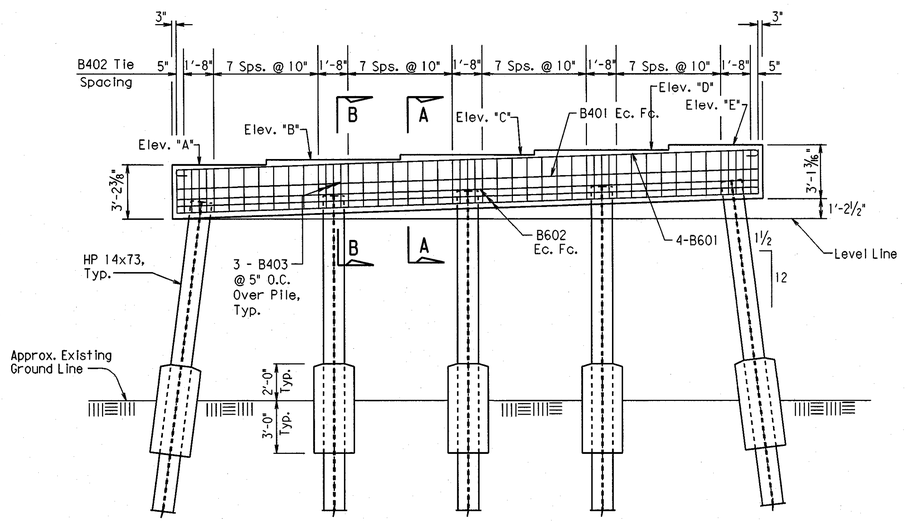

ELEVATION

Scale: 1/4" = 1'-0"
(Looking Ahead)

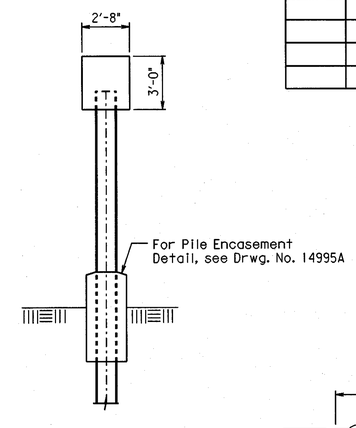

END VIEW

BAR LIST - EACH BENT (2, 3, 4, & 5)

MARK	NO. REQ'D.	LENGTH	'A'	'B'	P.D.
B401	2	32'-8"	-	-	str.
B402	36	10'-4"	2'-4"	2'-8"	2"
B403	15	7'-6"	2'-4"	2'-8"	2"
B601	4	34'-0"	32'-8"	6"	4 1/2"
B602	6	32'-8"	-	-	str.

BENDING DIAGRAMS

Dimensions are out to out of bars.

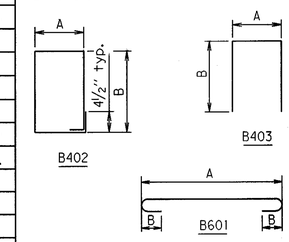

GENERAL NOTES

All Concrete shall be Class "S" with a minimum 28-day compressive strength f'_c = 3500 psi. Concrete shall be poured in the dry and all exposed corners to be chamfered 3/4" unless otherwise noted.

All reinforcing steel shall conform to AASHTO M31 or M53, Grade 60 (yield strength = 60,000 psi)

Reinforcing bars in top of cap shall be properly placed to avoid interference with anchor bolts.

For additional information, see layout.

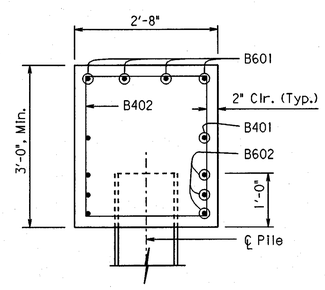

SECTION A-A

Scale: 3/4"=1'-0"

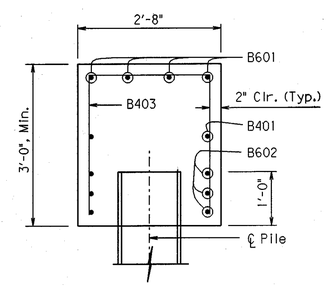

SECTION B-B

Scale: 3/4"=1'-0"

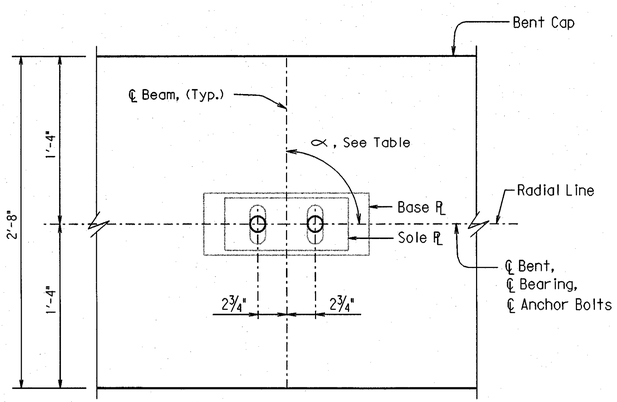

Note:
For Details of Steel Bearings, See Dwg. No. 43953.

TYPICAL ANCHOR BOLT LAYOUT

N.T.S

TABLE OF ELEVATIONS, DIMENSIONS AND ANGLES

BENT	"A"	"B"	"C"	"D"	"E"	"F"	∝
2	297.80	298.08	298.35	298.63	298.91	4 11/16"	90°41'46.9"
3	297.79	298.07	298.34	298.62	298.90	7 9/16"	90°13'55.6"
4	297.79	298.07	298.34	298.62	298.90	7 9/16"	89°46'04.3"
5	297.80	298.08	298.35	298.63	298.91	4 11/16"	89°18'13.0"

STATE OF ARKANSAS
REGISTERED PROFESSIONAL ENGINEER
No. 10269
JOLAMES W. CLEMENTS, III

4-30-02

BRIDGE ENGINEER

DETAILS OF INTERMEDIATE BENTS
WB FRONTAGE RD. OVER OTTER CREEK
WEST OF PULASKI CO. LINE - I-430
PULASKI COUNTY

ROUTE 30 SEC. 23

ARKANSAS STATE HIGHWAY COMMISSION

LITTLE ROCK, ARK.

DRAWN BY: CAB DATE: 4-20-02 FILENAME: BB60120X8.ibt
CHECKED BY: AS DATE: 4-20-02 SCALE: as shown
DESIGNED BY: RTP DATE: 3-01-02

BRIDGE NO. D6357 DRAWING NO. 43945

30-APR-2002
HRS060300PWB Front OtterPbent2.dgn

DATE REVISED	DATE FILMED	DATE REVISED	DATE FILMED	FED. ROAD DIST. NO.	STATE	FED. AID PROJ. NO.	SHEET NO.	TOTAL SHEETS
				6	ARK.			
				JOB NO.		B60120	318	502
				①	D6357 Typical Section 43946			

Note:
Class I Protective Surface Treatment shall be applied to the Roadway Surface, and the Face and the Top of Concrete Parapet Rail.

Note:
One Epoxy Coated #5 bar in the top and one Epoxy Coated #5 bar in the bottom may be substituted for each bar S501E. Payment will be based on weight of bar S501E.

All bars designated with an E suffix are to be Epoxy Coated.

Ⓡ = Radial Dimension

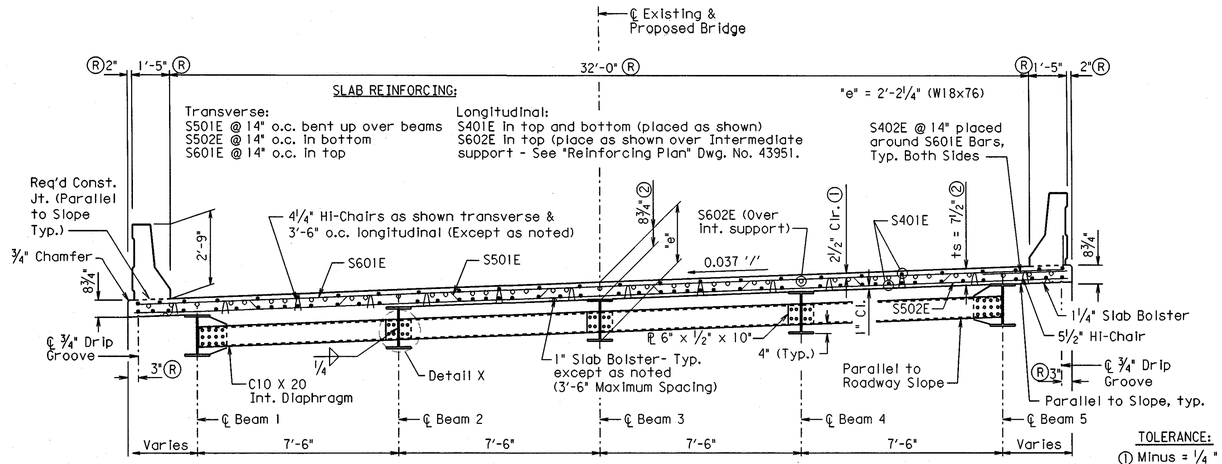

EXPANSION DEVICE:
Rdwy. C15 X 33.9
Conn. L's Split C15 X 33.9
Detail Device ⅛" high and provide ¼" shims using 2 - 1/16" and 1 - ⅛" PL's

TYPICAL SECTION
Scale ⅜" = 1'-0" (Looking Ahead)

TOLERANCE:
① Minus = ¼"
Plus = Equal to the amount of slab thickness used to meet slab thickness tolerance - see "ADJUSTMENT FOR SLAB THICKNESS TOLERANCE WHEN REMOVABLE DECK FORMING IS USED".

② See "ADJUSTMENT FOR SLAB THICKNESS TOLERANCE WHEN REMOVABLE DECK FORMING IS USED".

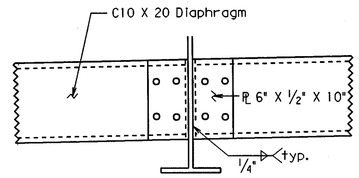

DETAIL X
N.T.S.

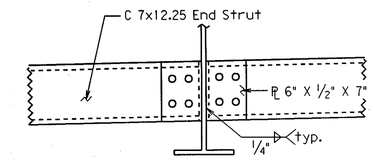

DETAIL Y
N.T.S.

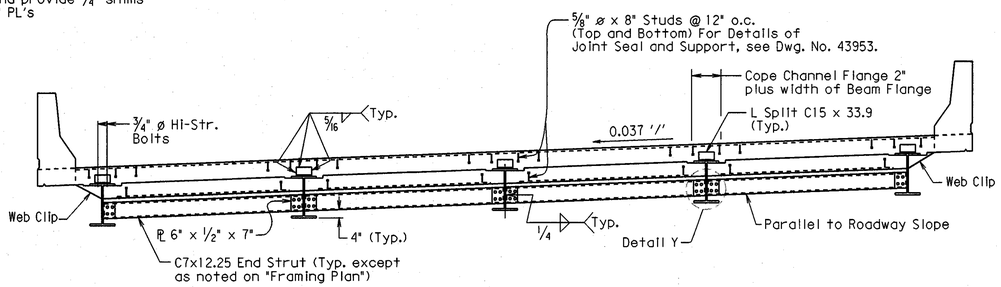

VIEW AT ℄ JOINT
Scale ⅜" = 1'-0" (Looking Ahead)

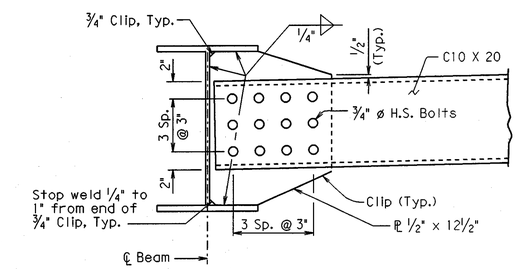

Note:
Bolts in diaphragm connections shall be properly installed and tightened in accordance with Subsection 807.71 of the Standard Specifications.

DIAPHRAGM CONNECTIONS AT EXTERIOR BEAMS
N.T.S.

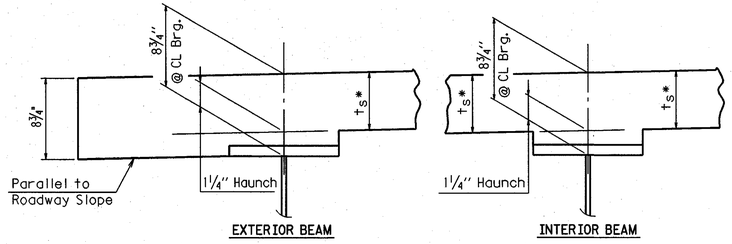

Note: t_s = slab thickness as shown on "TYPICAL SECTION".
* Tolerance when removable deck forming is used is +½", -¼". Haunch forming is required and shall be adjusted to maintain slab thickness tolerance.

ADJUSTMENT FOR SLAB THICKNESS TOLERANCE WHEN REMOVABLE DECK FORMING IS USED
N.T.S

Haunch dimension may vary within the following limits to maintain the grade and slab thickness tolerance :
Minimum - occurs when the top flange contacts the bottom reinforcing steel; Maximum-top flange thickness plus 1¾". No increase in concrete and structural steel quantities will be made to maintain tolerances.
Tolerances shown are applicable only when removable deck forming is used. See Std. Dwg. NO. 14991 for tolerances when permanent steel deck forms are used. Payment for concrete shall be based on removable deck forming.

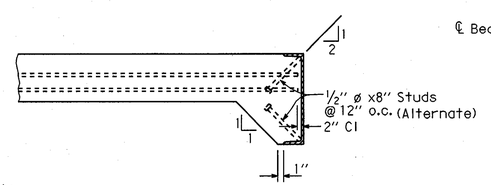

Note:
As an alternate to ⅝" ø studs, ½" ø X 8" studs spaced as shown may be used. Use weight of ⅝" ø studs as basis of measurement of Structural Steel in Anchors.

DETAILS OF ALTERNATE ANCHORS
No Scale

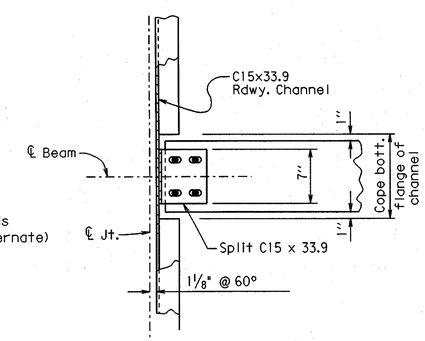

CHANNEL CONNECTION DETAIL
No Scale

STATE OF ARKANSAS
REGISTERED PROFESSIONAL ENGINEER
No. 10269
HOLMES W. CLEMENTS, III

4-30-02
BRIDGE ENGINEER

SHEET 1 OF 7

DETAILS OF 140'-0" CONTINUOUS W-BEAM UNIT
WB FRONTAGE RD. OVER OTTER CREEK
WEST OF PULASKI COUNTY LINE - I-430
PULASKI COUNTY

ROUTE 30 SEC. 23

ARKANSAS STATE HIGHWAY COMMISSION
LITTLE ROCK, ARK.

DRAWN BY: CAB/CCK DATE: 4-20-02 FILENAME: BB60120X8.S1
CHECKED BY: HWC DATE: 4-20-02 SCALE: As Shown
DESIGNED BY: CCK DATE: 11-07-01
BRIDGE NO. D6357 DRAWING NO. 43946

L:\PS060300\PWB Front Otter\Pds.dgn 30-APR-2002

DATE REVISED	DATE FILMED	DATE REVISED	DATE FILMED	FED. ROAD DIST. NO.	STATE	FED. AID PROJ. NO.	SHEET NO.	TOTAL SHEETS
				6	ARK.			
				JOB NO.		B60120	319	502
				①	D6357 Span Details 43947			

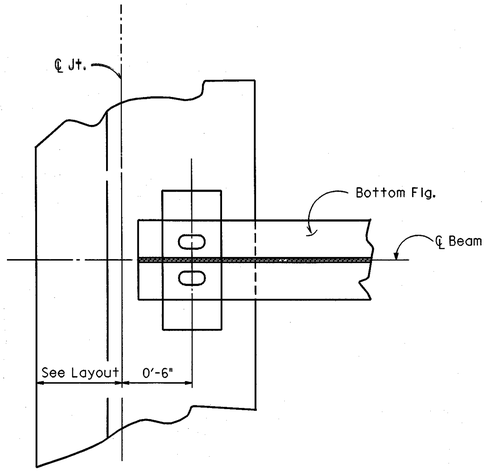

BEARING PLAN AT END BENT
No Scale

TABLE FOR WELD

Material Thickness of Thicker Part Joined (Inches)	Minimum Size of Fillet Weld (Inches)	Single Pass Weld Must Be Used
To 3/4" Inclusive	1/4"	
Over 3/4"	5/16"	

NOTE: When a fillet weld size, as shown on the plans, is larger than the minimum, the first pass shall be that specified for minimum size of fillet weld.

BAR LIST

MARK	NUMBER REQUIRED	LENGTH	P.D.
S401E	296	36'-2"	Str.
S402E	240	8'-6"	6 1/2"
S501E	119	35'-8"	3"
S502E	120	34'-10"	Str.
S601E	120	35'-11"	4 1/2"
S602E	164	22'-0"	Str.
P401E	303	6'-4"	2"
P402E	303	5'-6"	2"
P403E	102	9'-6"	Str.
P404E	15	3'-2"	2"
P405E	15	5'-10"	2"
P406E	72	7'-11"	Str.
P601E	15	9'-6"	Str.

BENDING DIAGRAMS

Dimensions are out to out of bars.

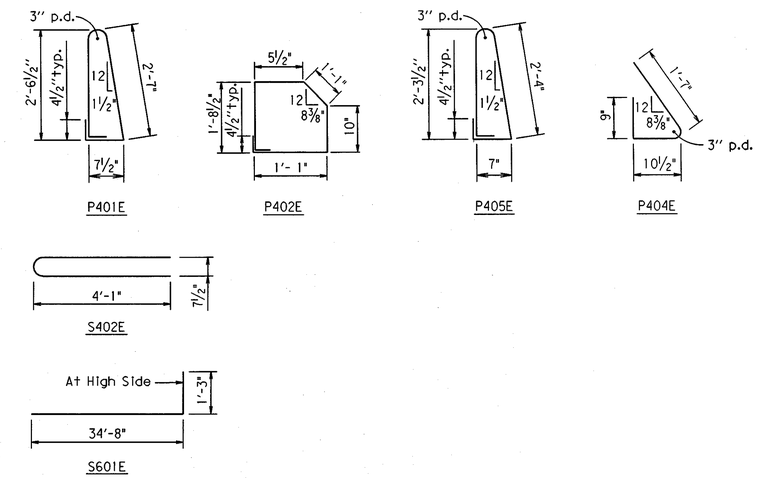

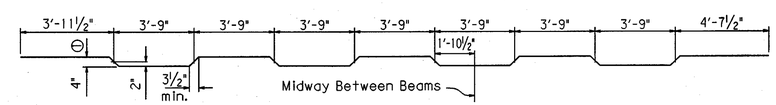

① 1/2" Overtolerance
No Undertolerance

S501E

STATE OF ARKANSAS
REGISTERED PROFESSIONAL ENGINEER
No. 10269
HOLMES W. CLEMENTS, III

3-20-02
BRIDGE ENGINEER

SHEET 2 OF 7

DETAILS of 140'-0" CONTINUOUS W-BEAM UNIT
WB FRONTAGE RD. OVER OTTER CREEK
WEST OF PULASKI CO. LINE - I-430
PULASKI COUNTY

ROUTE 30 SEC. 23

ARKANSAS STATE HIGHWAY COMMISSION
LITTLE ROCK, ARK.

DRAWN BY: CAB/CCK DATE: 2-26-02 FILENAME: BB60121X8.S2
CHECKED BY: HWC DATE: 2-28-02 SCALE: As Noted
DESIGNED BY: CCK DATE: 11-07-01

BRIDGE NO. D6357 DRAWING NO. 43947

20-MAR-2002
I:\S060300\WB Front Otter\rebar.dgn

DATE REVISED	DATE FILMED	DATE REVISED	DATE FILMED	FED. ROAD DIST. NO.	STATE	FED. AID PROJ. NO.	SHEET NO.	TOTAL SHEETS
				6	ARK.			
				JOB NO.		60120	320	502
				1	D6357 Framing Plan 43948			

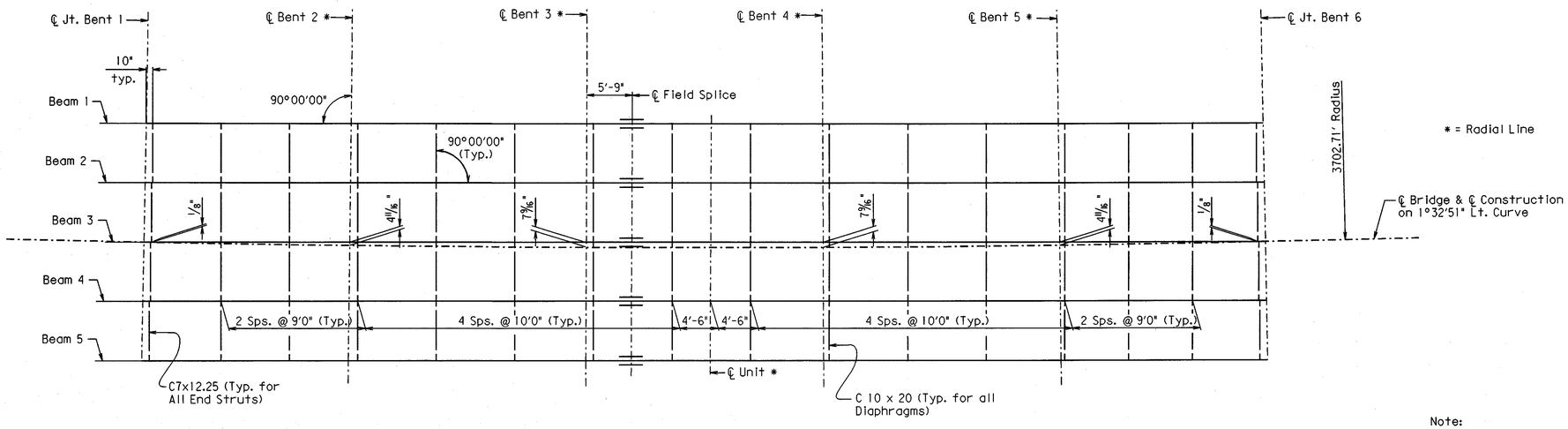

* = Radial Line

FRAMING PLAN

Note:
All beams shall be placed parallel to a chord at C.L. Bridge. Chord runs from C.L. Joint Bent 1 to C.L. Joint Bent 6.

All bents are perpendicular to C.L. Bridge

All diaphragms and connection plates shall be AASHTO M270, Gr. 50W steel.

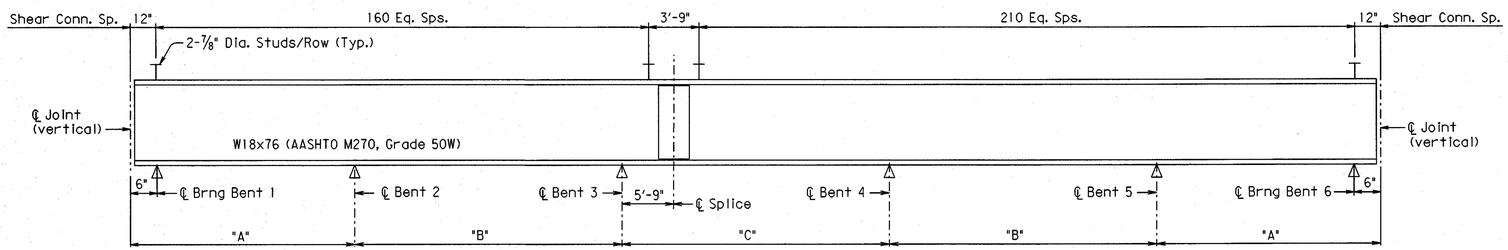

TYPICAL BEAM ELEVATION

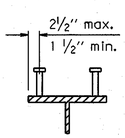

Stud Shear Connectors shown shall be 7/8"ø x 4" long, granular flux filled, solid fluxed or equal, and automatically end welded to the beam flange in accordance with the recommendations of the Manufacturer. 3/4"ø studs may be used in place of the 7/8"ø studs shown, at the ratio of 1 .361 -3/4"ø studs in place of one 7/8"ø stud. 7/8"ø studs will be used as basis for measurement of structural steel in shear connectors. Maximum stud spacing = 24".

SHEAR CONNECTOR DETAIL

TABLE OF VARIABLES				
Beam Line No.	Beam Length ℄ Jt. to ℄ Jt.	"A"	"B"	"C"
1	139'-4 15/16"	24'-10 11/16"	29'-10 1/2"	29'-10 1/2"
2	139'-8 3/8"	24'-11 5/16"	29'-11 1/4"	29'-11 1/4"
3	139'-11 15/16"	25'-0"	30'-0"	29'-11 15/16"
4	140'-3 5/16"	25'-0 5/8"	30'-0 11/16"	30'-0 11/16"
5	140'-6 11/16"	25'-1 1/4"	30'-1 7/16"	30'-1 5/16"

STATE OF ARKANSAS
REGISTERED PROFESSIONAL ENGINEER
No. 10269
HOLMES W. CLEMENTS, III

4-30-02

BRIDGE ENGINEER

SHEET 3 OF 7

DETAILS OF 140'-0" CONTINUOUS W-BEAM UNIT
WB FRONTAGE RD. OVER OTTER CREEK
WEST OF PULASKI COUNTY LINE - I-430
PULASKI COUNTY

ROUTE 30 SEC. 23

ARKANSAS STATE HIGHWAY COMMISSION

LITTLE ROCK, ARK.

DRAWN BY:	CAB	DATE:	4-22-02	FILENAME:	BB60120X8.S3
CHECKED BY:	HWC	DATE:	4-22-02	SCALE:	None
DESIGNED BY:	DPD	DATE:	2-20-02		

BRIDGE NO. D6357 DRAWING NO. 43948

L:\R50603001\WB Front Otter\℄fram.dgn 30-APR-2002

DATE REVISED	DATE FILMED	DATE REVISED	DATE FILMED	FED. ROAD DIST. NO.	STATE	FED. AID PROJ. NO.	SHEET NO.	TOTAL SHEETS
				6	ARK.			
				JOB NO.		B60120	321	502
				1	D6357 Span Details 43949			

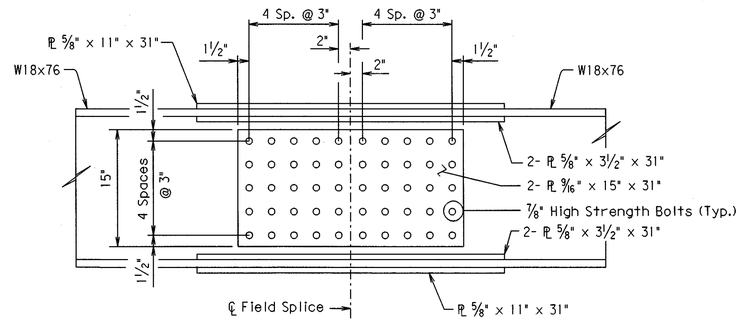

WEB SPLICE DETAILS

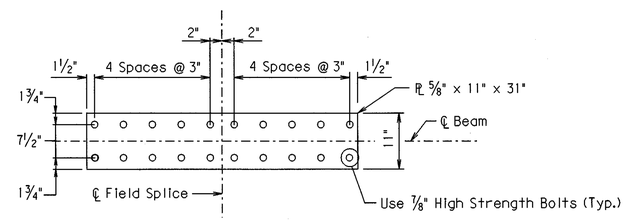

TOP & BOTTOM FLANGE SPLICES DETAILS (Outside)

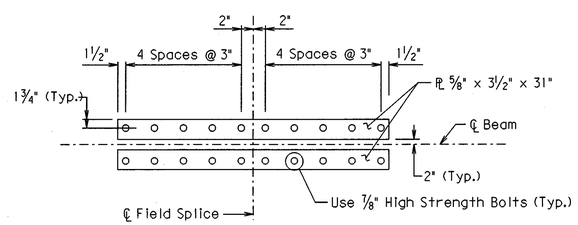

TOP & BOTTOM FLANGE SPLICES DETAILS (Inside)

SPLICE DETAILS

No Scale

Note: All splice plates shall be AASHTO M270, Grade 50W.

STATE OF ARKANSAS
REGISTERED PROFESSIONAL ENGINEER
No. 10269
HOLMES W. CLEMENTS, III

5-17-02

BRIDGE ENGINEER

SHEET 4 OF 7

DETAILS OF 140'-0" CONTINUOUS W-BEAM UNIT
WB FRONTAGE RD. OVER OTTER CREEK
WEST OF PULASKI CO. LINE - I-430
PULASKI COUNTY

ROUTE 30 SEC. 23

ARKANSAS STATE HIGHWAY COMMISSION

LITTLE ROCK, ARK.

DRAWN BY:	CAB	DATE:	5-17-02	FILENAME:	BB60120X8.S4
CHECKED BY:	HWC	DATE:	5-17-02	SCALE:	1/4" = 1'-0"
DESIGNED BY:	DPD	DATE:	2-19-02		

BRIDGE NO. D6357 DRAWING NO. 43949

L:R:s060300R WB Front Otter R splice.dgn 17-MAY-2002

DATE REVISED	DATE FILMED	DATE REVISED	DATE FILMED	FED. ROAD DIST. NO.	STATE	FED. AID PROJ. NO.	SHEET NO.	TOTAL SHEETS
				6	ARK.			
				JOB NO.		B60120	322	502

(1) D6357 Span Details 43950

DESIGN INFORMATION

Live Loading: HS20 + Military

Method of Design: Load Factor

Dead Loads:		Int. Beam	Ext. Beam
a) To Beam		703 plf + 1.3(Wt./ft. of beam)	578 plf + 1.3(Wt./ft. of beam)
b) To Composite Beam		312 plf *	312 plf *
Live Loads:	To each Composite Beam	1.3636 wheels + impact	1.2766 wheels + impact

* Includes 154 plf of future wearing surface

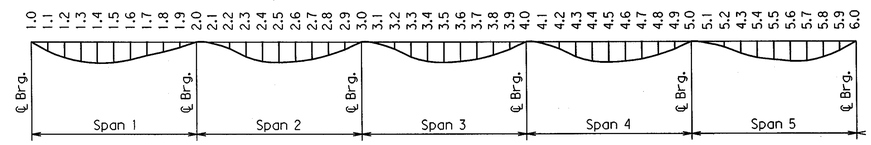

DEAD LOAD DEFLECTION DIAGRAM

Note:
Camber for Dead Load Deflection plus Vertical Curve = +/- 1/4" Tolerance.
Deflections shown are from a chord from C.L. Bearing to C.L. Bearing.
Vertical curve corrections are not included.

TABLE OF DEAD LOAD DEFLECTIONS (INCHES)

Span	Point of Deflection	Structural Steel		Structural Steel + Slab		Structural Steel + Slab + Parapet	
		Interior	Exterior	Interior	Exterior	Interior	Exterior
1	1.0	0.000	0.000	0.000	0.000	0.000	0.000
	1.1	0.008	0.006	0.033	0.027	0.035	0.030
	1.2	0.014	0.010	0.059	0.046	0.063	0.051
	1.3	0.018	0.012	0.074	0.059	0.079	0.065
	1.4	0.019	0.013	0.081	0.064	0.087	0.070
	1.5	0.019	0.013	0.078	0.062	0.084	0.068
	1.6	0.016	0.011	0.067	0.053	0.072	0.058
	1.7	0.012	0.008	0.050	0.040	0.054	0.044
	1.8	0.009	0.006	0.036	0.029	0.039	0.032
	1.9	0.005	0.003	0.019	0.016	0.020	0.018
	2.0	0.000	0.000	0.000	0.000	0.000	0.000
2	2.1	0.001	0.001	0.005	0.004	0.005	0.004
	2.2	0.006	0.004	0.023	0.019	0.025	0.021
	2.3	0.013	0.009	0.055	0.044	0.059	0.048
	2.4	0.018	0.012	0.075	0.059	0.080	0.065
	2.5	0.018	0.013	0.078	0.062	0.083	0.068
	2.6	0.018	0.012	0.075	0.059	0.080	0.065
	2.7	0.015	0.011	0.065	0.052	0.070	0.057
	2.8	0.012	0.008	0.050	0.039	0.054	0.043
	2.9	0.007	0.005	0.028	0.022	0.030	0.024
	3.0	0.000	0.000	0.000	0.000	0.000	0.000
3	3.1	0.002	0.001	0.006	0.005	0.006	0.005
	3.2	0.006	0.004	0.025	0.020	0.027	0.022
	3.3	0.013	0.009	0.056	0.045	0.060	0.049
	3.4	0.018	0.012	0.075	0.059	0.080	0.065
	3.5	0.019	0.013	0.078	0.062	0.084	0.068
	3.6	0.018	0.012	0.075	0.059	0.080	0.065
	3.7	0.016	0.011	0.066	0.052	0.071	0.057
	3.8	0.012	0.008	0.050	0.040	0.054	0.044
	3.9	0.007	0.005	0.028	0.022	0.030	0.024
	4.0	0.000	0.000	0.000	0.000	0.000	0.000
4	4.1	0.001	0.001	0.006	0.005	0.006	0.005
	4.2	0.006	0.004	0.025	0.020	0.027	0.022
	4.3	0.013	0.009	0.056	0.044	0.060	0.048
	4.4	0.018	0.012	0.075	0.059	0.080	0.065
	4.5	0.018	0.013	0.078	0.062	0.083	0.068
	4.6	0.018	0.012	0.075	0.059	0.080	0.065
	4.7	0.015	0.011	0.065	0.052	0.070	0.057
	4.8	0.012	0.008	0.050	0.039	0.054	0.043
	4.9	0.007	0.005	0.028	0.022	0.030	0.024
	5.0	0.000	0.000	0.000	0.000	0.000	0.000
5	5.1	0.001	0.001	0.006	0.005	0.006	0.005
	5.2	0.005	0.003	0.020	0.016	0.021	0.018
	5.3	0.011	0.007	0.044	0.035	0.047	0.038
	5.4	0.015	0.010	0.062	0.049	0.066	0.054
	5.5	0.017	0.012	0.070	0.055	0.075	0.060
	5.6	0.018	0.013	0.075	0.060	0.080	0.066
	5.7	0.018	0.012	0.074	0.059	0.079	0.065
	5.8	0.014	0.010	0.059	0.046	0.063	0.051
	5.9	0.008	0.006	0.033	0.027	0.035	0.030
	6.0	0.000	0.000	0.000	0.000	0.000	0.000

GENERAL NOTES

CONSTRUCTION SPECIFICATIONS: Arkansas State Highway and Transportation Department of Standard Specifications for Highway Construction (1996 Edition) with applicable supplemental specifications and special provisions.

DESIGN SPECIFICATIONS: AASHTO Standard Specifications for Highway Bridges (1996 edition) with current Interim Specifications.

MATERIALS AND STRENGTH:

Class S (AE) Concrete:	f'c = 4,000 psi
Reinforcing Steel (AASHTO M31 or M53, Gr. 60)	Fy = 60,000 psi
Structural Steel (AASHTO M 270, Gr. 50W)	Fy = 50,000 psi

CONCRETE: Concrete shall be poured in the dry and all exposed corners to be chamfered 3/4" unless otherwise noted. All concrete shall be Class S(AE) with a minimum 28 day compressive strength f'c = 4, 000 psi.

The superstructure details shown are for use when removable deck forming is used and are the basis for measurement of Class S(AE) Concrete. See Standard Drawing No. 14991 for allowable modifications and for tolerances when Permanent Steel Bridge Deck Forms are used.

Concrete in bridge superstructure shall be placed, consolidated and screeded off for the entire pour before any concrete has taken its initial set. This may require the use of a retarding agent.

The concrete deck shall be given a tine finish in accordance with subsection 802.19 for Class 5 Tined Bridge Roadway Surface Finish. Movement of the finishing machine across new concrete shall be on planks placed on the surface and shall be prohibited for 72 hours after finishing the pour. Sufficient concrete must be placed ahead of the strike-off to fully load the beam. If a longitudinal strike-off is used, a vertical camber adjustment must be made in the strike-off to account for the future dead load deflection due to the railing. A minimum of 72 hours shall elapse between completion of the slab and the pouring of the parapet railing.

REINFORCING STEEL: All reinforcing steel shall conform to AASHTO M31or M53, Grade 60. The reinforcing steel is to be accurately located in the forms and firmly held in place by steel wire supports, sufficient in number and size to prevent displacement during the course of construction. The wire supports will not be paid for directly, but will be considered subsidiary to the item "Reinforcing Steel - Bridge".

STRUCTURAL STEEL: All structural steel shall be AASHTO M270, Grade 50W unless otherwise noted and shall be paid for as "Structural Steel in Beam Spans (M270, Gr. 50W)". All exposed surfaces shall be cleaned in accordance with subsection 807.84.

Drawings show general features of design only. Shop drawings shall be made in accordance with the specifications, submitted and approval secured before fabrication is begun.

Structural steel shapes of equal or greater strength may be substituted for shapes shown if prior approval is obtained from the Bridge Engineer. Payment will be made on the basis of shapes shown.

Beams are considered main load carrying members and shall meet the Longitudinal Charpy V-Notch Test specified in subsection 807.05. The Charpy V-Notch Test will not be required on field splice plates.

All beams shall be blocked in their true position in the shop with the webs horizontal. The camber, length of sections, distance between bearings and openings of joints shall be measured with the beams in their true position and this information shall become part of the permanent records for this job. The component parts shall be match marked in this assembly and these marks shall be shown on the erection diagram. All beam dimensions are based on a temperature of 60 degrees F. A tolerance of 1/4" ± is allowed for camber.

Flange splice plates shall be cut and fabricated so that the primary direction of rolling is parallel to the direction of the main tensile and/or compressive stresses.

All welding that is to be done during fabrication of structural steel, including temporary welds, shall be detailed on the shop drawings and submitted for approval. If the Contractor or Erector should want to make additional welds, whether temporary or permanent, he shall submit detailed drawings with a formal request to the Bridge Engineer for approval. All welding shall conform to subsection 807.26.

Field connections shall be bolted with high-strength bolts and shall be 3/4" ø bolts unless otherwise noted. Bolts shall be placed with heads on the outside face of the exterior beam webs and on the bottom of the beam flanges. Holes for 3/4" ø high-strength bolts may be 15/16" ø if a washer is supplied for use under both the nut and head of the bolt.

Diaphragms and end struts shall be installed as beams are erected. All bolts in diaphragms end struts, and field splices shall be installed and tightened in accordance with subsection 807.71 prior to pouring the concrete deck.

All bearing plates and roadway expansion devices are to be paid for as "Structural Steel in Beam Spans". Bearings shall be finally seated using one of the options set forth in the Specifications. This work and material are to be considered as subsidiary to the item "Structural Steel in Beam Spans" and will not be paid for directly.

STATE OF ARKANSAS
REGISTERED PROFESSIONAL ENGINEER
No. 10269
HOLMES W. CLEMENTS III

4-30-02
BRIDGE ENGINEER

SHEET 5 OF 7

DETAILS OF 140'-0" CONTINUOUS W-BEAM UNIT

WB FRONTAGE RD. OVER OTTER CREEK

WEST OF PULASKI COUNTY LINE - I-430

PULASKI COUNTY

ROUTE 30 SEC. 23

ARKANSAS STATE HIGHWAY COMMISSION

LITTLE ROCK, ARK.

DRAWN BY:	CAB	DATE:	4/22/02	FILENAME:	BB60120X8.S5
CHECKED BY:	HWC	DATE:	4/22/02	SCALE:	none
DESIGNED BY:	DPD	DATE:	2/20/02		

BRIDGE NO. D6357 DRAWING NO. 43950

L:R5060300R\WB Front Otter\secdet2.dgn 30-APR-2002

DATE REVISED	DATE FILMED	DATE REVISED	DATE FILMED	FED. ROAD DIST. NO.	STATE	FED. AID PROJ. NO.	SHEET NO.	TOTAL SHEETS
				6	ARK.			
				JOB NO.		B60120	323	502

1 D6357 Deck Plan 43951

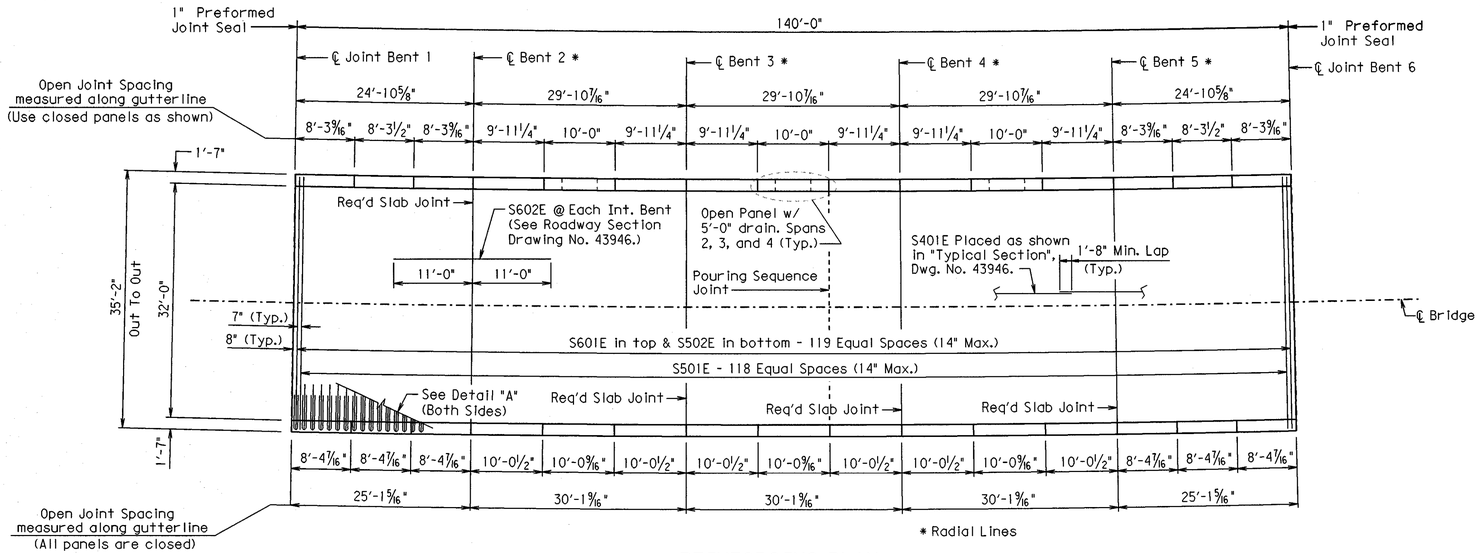

REINFORCING PLAN
No Scale

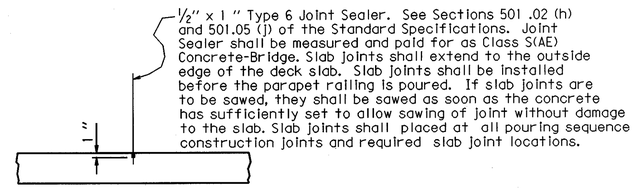

SLAB JOINT DETAIL
No Scale

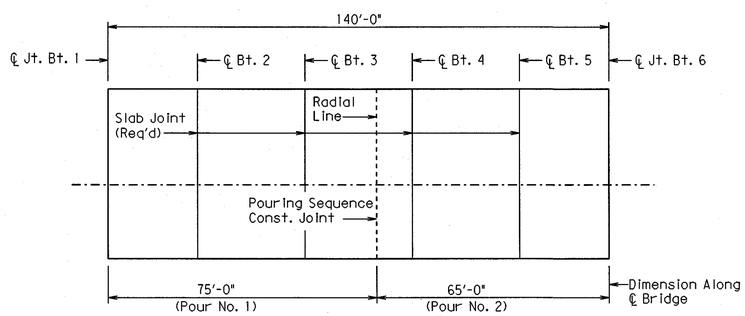

POURING SEQUENCE
No Scale

Notes:
Pour (1) must be placed before Pour (2) can be placed. 72 hours shall elapse between the end of a pour and the start of an adjacent pour. Any railing pours made before the entire slab unit has been placed must be approved by the Engineer. Concrete in bridge superstructure shall be consolidated for the entire pour before any concrete has taken its initial set. This may require the use of a retarding agent.

The Contractor must obtain approval from the Bridge Engineer for any deviations from the pouring sequence shown.

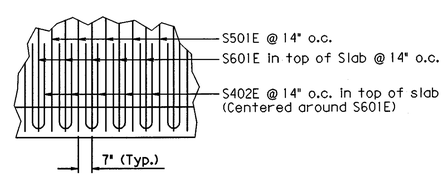

DETAIL "A"
No Scale

STATE OF ARKANSAS
REGISTERED PROFESSIONAL ENGINEER
No. 10269
HOLMES W. CLEMENTS, III

5-17-02

BRIDGE ENGINEER

SHEET 6 OF 7

DETAILS OF 140'-0" CONTINUOUS W-BEAM UNIT
WB FRONTAGE RD. OVER OTTER CREEK
WEST OF PULASKI COUNTY LINE - I-430
PULASKI COUNTY

ROUTE 30 SEC. 23

ARKANSAS STATE HIGHWAY COMMISSION
LITTLE ROCK, ARK.

DRAWN BY: CAB/CCK DATE: 5-17-02 FILENAME: BB60120X8.S6
CHECKED BY: HWC DATE: 5-17-02 SCALE: 1'=10'-0"
DESIGNED BY: CCK DATE: 11-05-01

BRIDGE NO. D6357 DRAWING NO. 43951

17-MAY-2002
L:\Rs060300\WB Front OtterRdp.dgn

DATE REVISED	DATE FILMED	DATE REVISED	DATE FILMED	FED. ROAD DIST. NO.	STATE	FED. AID PROJ. NO.	SHEET NO.	TOTAL SHEETS
				6	ARK.			
				JOB NO.		B60120	324	502
				1	D6357 Span Details 43952			

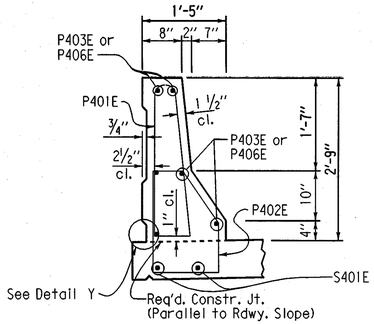

SECTION B-B
N.T.S.

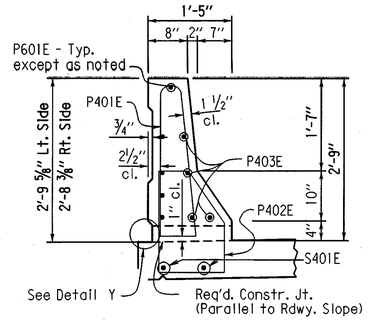

SECTION C-C
N.T.S.

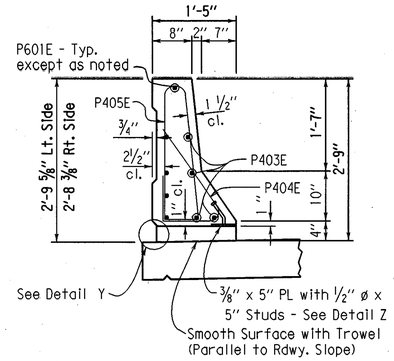

SECTION D-D
N.T.S.

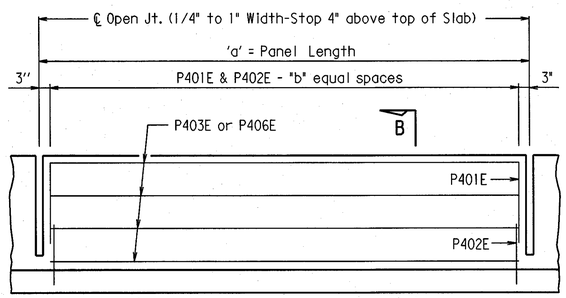

TYPICAL CLOSED PANEL PARAPET RAIL
Not to scale

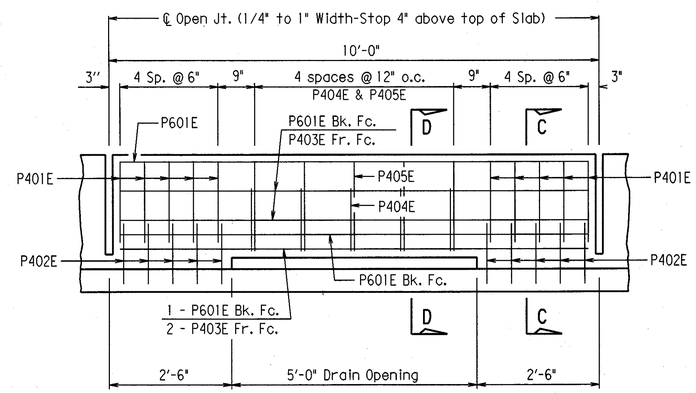

TYPICAL OPEN DRAIN PANEL PARAPET RAIL
Not to scale

CLOSED PARAPET RAIL VARIABLES

"a"	"b"	Longitudinal Reinforcing
10'-0" (±)	10	P403E
8'-4" (±)	8	P406E

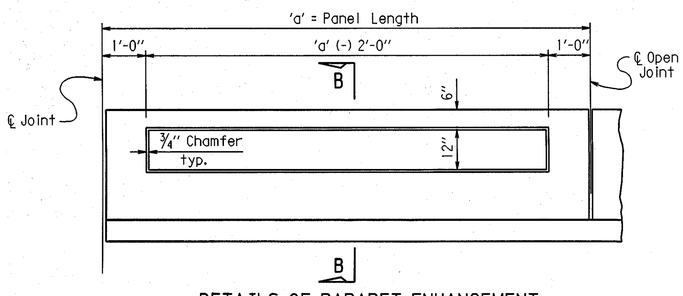

DETAILS OF PARAPET ENHANCEMENT
Not to scale

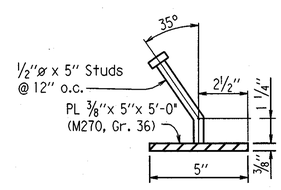

DETAIL Z
No Scale

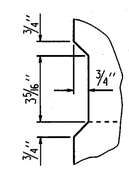

DETAIL Y
No Scale

Note:
Parapet studs shall be 5" long, granular flux filled, solid fluxed, or equal and automatically end welded to the plate. Studs and plate shall meet the requirements of Section 807. Studs and plates shall be measured and paid for as Structural Steel or Class S(AE) Concrete-Bridge.

The surfaces of the 3/8" plates which will not be in contact with concrete shall be painted in accordance with Section 638, or as approved by the Engineer. Only one coat is required and shall be applied in the fabricator's shop. Painting will not be paid for directly, but will be considered subsidiary to Structural Steel.

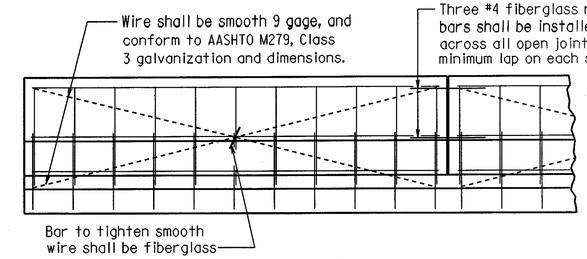

All panels shall be braced as shown to prevent racking. All open joints shall be sawed as soon as practical to a minimum width of 1/4" to control cracking. Before sawing all joints must be grooved before the concrete is set. Sawing of the joints must be controlled so it will follow the grooved joint.

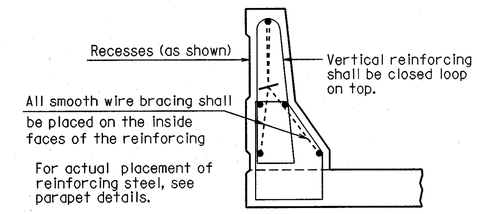

The extruded parapet shall conform to the horizontal and vertical lines shown on the plans or as directed by the Engineer and shall present a smooth, uniform appearance and texture. Exposed surfaces may be given a light brush finish or a Class 3, Textured Coating Finish, in place of Class 2, Rubbed Finish.

DETAILS OF OPTIONAL SLIPFORMING OF CONCRETE PARAPET RAIL
Scale: 1/2" = 1 '-0"

STATE OF ARKANSAS
REGISTERED PROFESSIONAL ENGINEER
No. 10269
HOLMES W. CLEMENTS, III

Holmes W. Clements III
4-30-02
BRIDGE ENGINEER

SHEET 7 OF 7
DETAILS OF 140'-0" CONTINUOUS W-BEAM UNIT
WB FRONTAGE RD. OVER OTTER CREEK
WEST OF PULASKI COUNTY LINE - I-430
PULASKI COUNTY

ROUTE 30 SEC. 23
ARKANSAS STATE HIGHWAY COMMISSION
LITTLE ROCK, ARK.

DRAWN BY: CAB/CCK DATE: 4-22-02 FILENAME: BB60120X8.S7
CHECKED BY: HWC DATE: 4-22-02 SCALE: As Noted
DESIGNED BY: CCK DATE: 9-01-01
BRIDGE NO. D6357 DRAWING NO. 43952

30-APR-2002
L:[S06030]WB Front Otter]paradetl.dgn

DATE REVISED	DATE FILMED	DATE REVISED	DATE FILMED	FED. ROAD DIST. NO.	STATE	FED. AID PROJ. NO.	SHEET NO.	TOTAL SHEETS
				6	ARK.			
				JOB NO.		B60120	325	502

(1) D6357 Bearing & Joint Details 43953

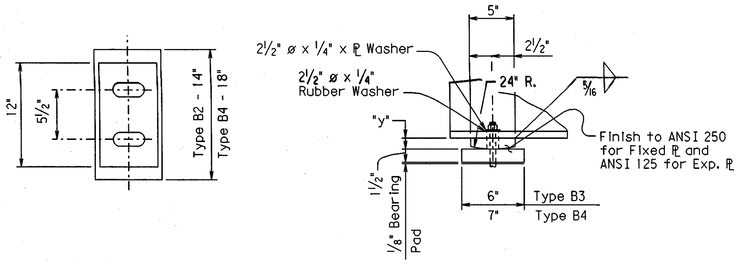

FIXED SHOE: 1½" ø Holes in Sole Plate, Masonry Plate, and Beam Flange.
EXPANSION SHOE: 3" x 1½" Slot in Sole Plate and Beam Flange
1½" ø Holes in Masonry Plate

TYPE "B" FIXED OR EXP. SHOE

Location	Base ℙ (Type)	Sole ℙ Thickness "y"
Bents 1 & 6	B2	1¼"
Bents 2 - 5	B4	1¼"

Note:
Plates for Type B Shoes are M270, GR. 50W.

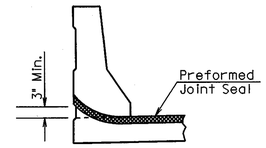

JOINT SEAL PLACEMENT AT CURB

N.T.S.

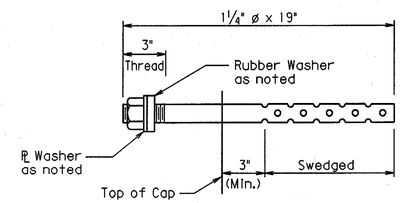

ANCHOR BOLT DETAIL

No Scale

Note:
Anchor Bolt, Nut, and Washer to be according to Subsection 807.07. Indentations shall be circular with rounded bottoms and staggered as shown above. Rubber washer shall be closed cell expanded rubber, meeting the requirements of ASTM D1056-85 2B2 E2, and shall be considered subsidiary to to the item of structural steel.

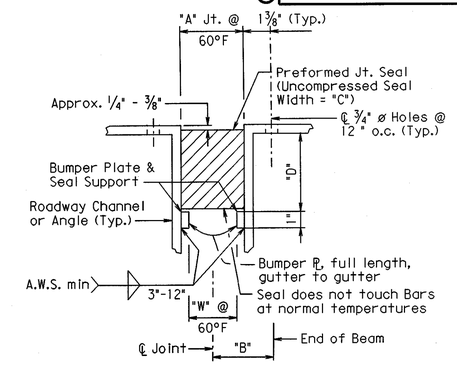

Note:
Dimension "D" shall conform to the recommendations of the Seal Manufacturer as approved by the Bridge Engineer.

DETAIL OF JOINT SEAL & SUPPORT

N.T.S.

Note:
The Seal shall be in one piece (without splices) for the full length of the joint, except that lengths 55 feet and longer may have a factory made splice. Splices when required, shall be shown on the Shop Drawings and shall be placed near the high ends of the Roadway. Separation of the Splice during installation shall be cause for rejection of the Seal.

Note: Concrete shall be hand packed under the Joint Armor.

JOINT SEAL DATA

Bent	"A" Joint Width Perpendicular To Joint @ 60° F *	"B" Perpendicular To Joint	"C" Uncompressed Seal Width	"W" Width Between Plates	Bumper Plate Size
1 & 6	2¼"	2⅜" ±	3½"	¾"	1" x ¾"

* Installation is limited to 40° F min. and 80° F max.

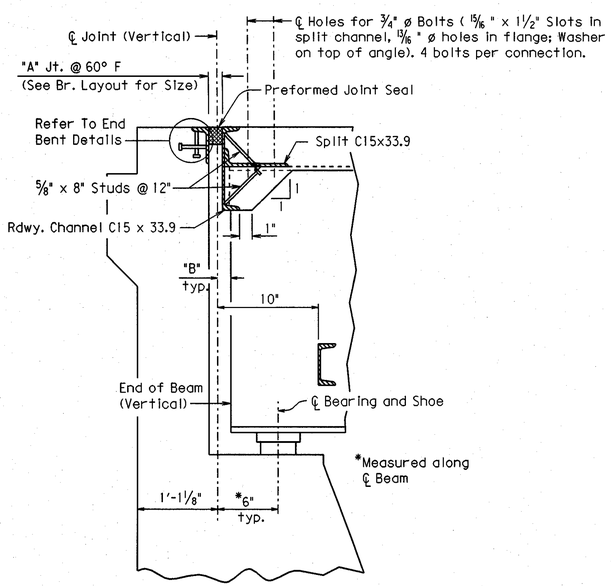

JOINT AT END BENTS

N.T.S.

For Transverse Strike-off:
Plate, Angle, or other shapes, attached to Channels (or Angles) for Blocking

For Longitudinal Strike-off:
Bolt and spacer attached to channels for Blocking

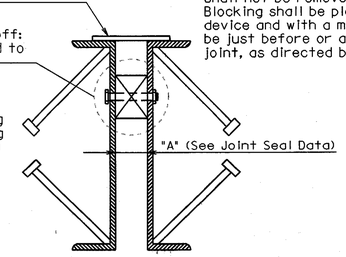

Note:
Each Expansion Joint device shall be blocked in the shop by the fabricator to the dimension "A", and the blocking details shall be shown on the Shop Drawings. The blocking shall not be removed until the slab on one side is complete. Blocking shall be placed within 2 feet of each end of the device and with a maximum spacing of 8 feet. Removal shall be just before or after pouring the second side of the joint, as directed by the engineer.

Note:
One of two different blocking systems is required depending on the type of span finishing machine that is used.

STATE OF ARKANSAS
REGISTERED PROFESSIONAL ENGINEER
No. 10269
HOLMES W. CLEMENTS, III

4-30-02

BRIDGE ENGINEER

DETAILS OF BEARING ASSEMBLY & JOINT SEAL
WB FRONTAGE RD. OVER OTTER CREEK
WEST OF PULASKI COUNTY LINE - I-430
PULASKI COUNTY

ROUTE 30 SEC. 23

ARKANSAS STATE HIGHWAY COMMISSION

LITTLE ROCK, ARK.

DRAWN BY: MRM DATE: 4-22-02 FILENAME: BB60120X8.dgn
CHECKED BY: HWC DATE: 4-22-02 SCALE: As noted
DESIGNED BY: MRM DATE: 2-22-02

BRIDGE NO. D6357 DRAWING NO. 43953

L:\S060300\WB Front Otter\brg.dgn 30-APR-2002