DATE REVISED	DATE FILMED	DATE REVISED	DATE FILMED	FED. ROAD DIST. NO.	STATE	FED. AID PROJ. NO.	SHEET NO.	TOT. SHEETS
				6	ARK.			
				JOB NO.		60452	61	118
				1	63570	LAYOUT	31018	

For R/W Data - See Rdwy. Plans

Note: All beams shall be placed parallel to and symmetrical about a chord equal to the bridge length. All bents shall be constructed with their transverse center lines on radial lines of a 1°33'15" curve. The parapet railing shall be constructed parallel to the arc of 1°33'15" curve.

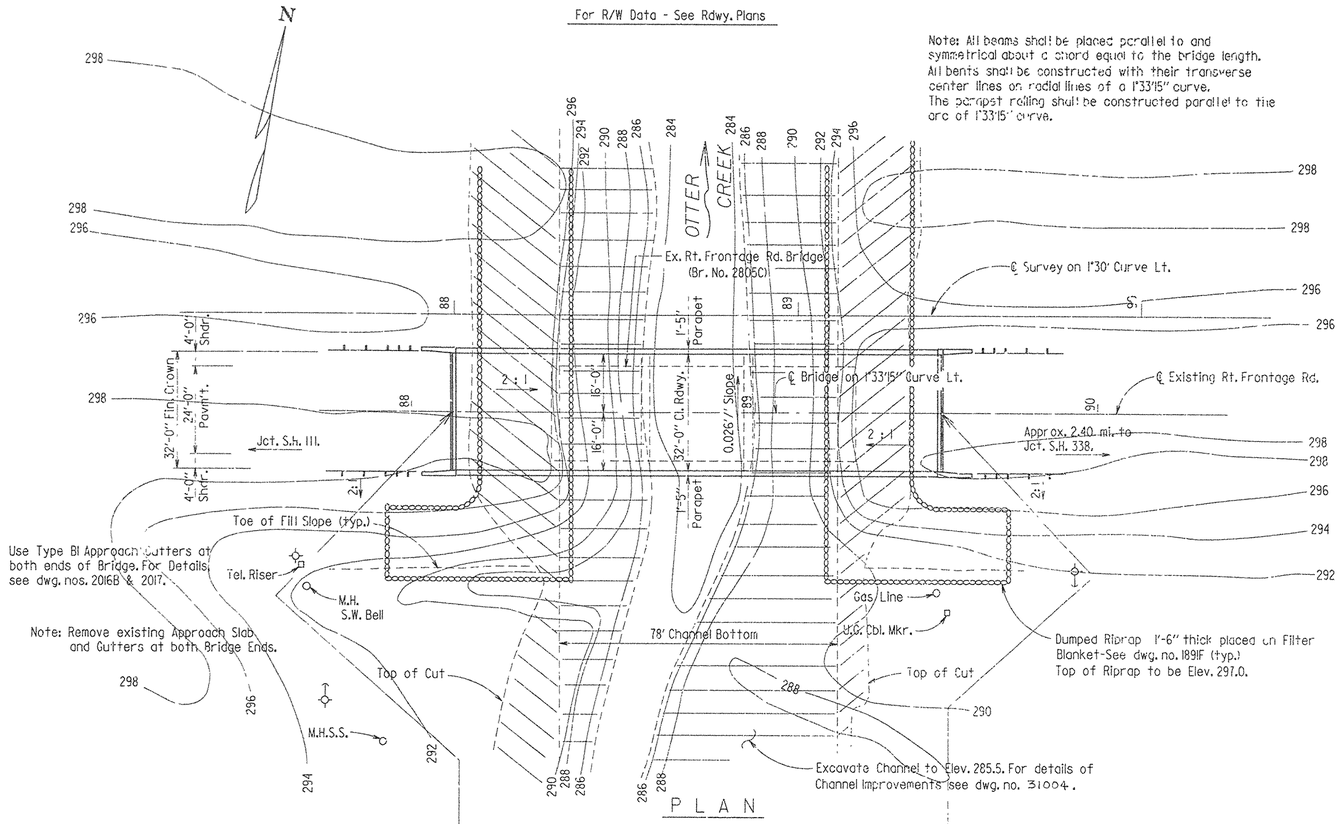

PLAN

Level Grade — Elev. 300.60 ℄ New Deck @ ℄ Bridge

Total Length Of Bridge = 142'-1⅝"

1'-0 13/16" — 140' Cont. Comp. W-Beam Unit (25'-30'-30'-30'-25') — 1'-0 13/16"

1⅝" Jt. — 1⅝" Jt.

*Stations are at ℄ Rt. Frontage Rd.

*Beg. Bridge Sta. 88+13.93 — *End Bridge Sta. 89+56.07

Note: Adjust Bridge Stationing as needed to align new interior bents with the existing west bound bridge interior bents.

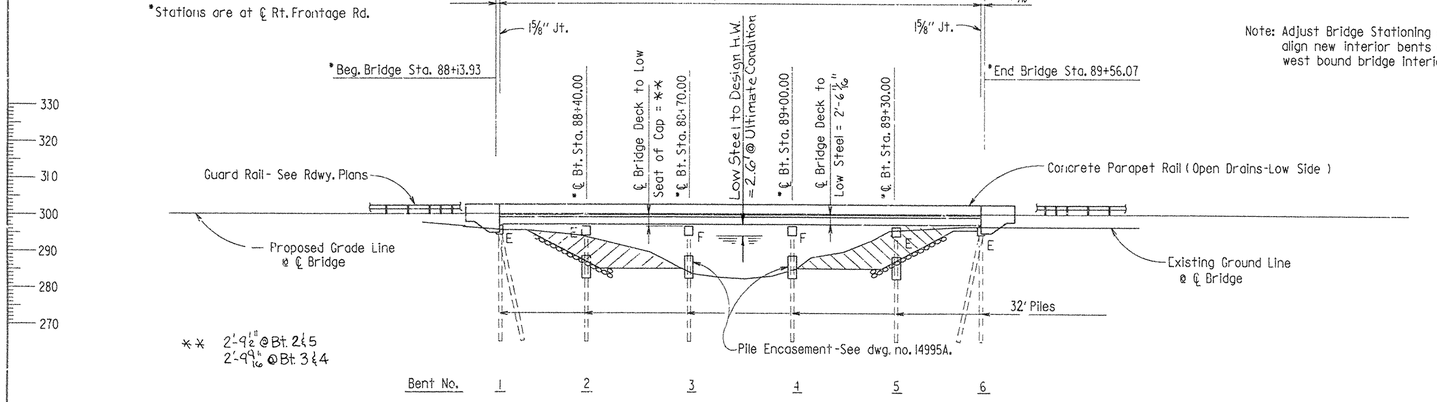

ELEVATION

Note: For Hydraulic Data, see dwg. no. 31004.

HORIZONTAL CURVE DATA: (FOR ℄ EX. RT. FRONTAGE RD.)

P.I.- Sta. 84+54.95
P.C.- Sta. 73+59.45
P.T.- Sta. 94+93.17
Δ = 18°30'21" Lt.
D = 1°33'15"
R = 3686.59'
L = 1190.72'
T = 600.59'

HORIZONTAL CURVE DATA: (FOR ℄ SURVEY)

P.I. - Sta. 84+46.92
Δ = 32°00'21" Lt.
D = 1°30'
R = 3819.7186'
L = 2133.72'
T = 1095.50'

GENERAL NOTES

BENCH MARK: □ Cut in East end of Lt. Wheelguard of bridge over Rt. Service Rd. 8' Rt. Sta. 89+18, Elev. 298.26.

CONSTRUCTION SPECIFICATIONS: Arkansas State Highway and Transportation Department Standard Specifications for Highway Construction, 1991 edition, with applicable supplemental specifications and special provisions.

DESIGN SPECIFICATIONS: AASHTO Standard Specifications for Highway Bridges, 1989 with current interim specifications.

LIVE LOADING: HS20 — METHOD OF DESIGN: Load Factor

MATERIALS AND STRENGTHS:

Class S(AE) Concrete (superstructure)	f'c = 4,000 psi
Class S Concrete (substructure)	f'c = 3,500 psi
Reinforcing Steel (A615 or A617, Gr. 60)	Fy = 60,000 psi
Structural Steel (A36)	Fy = 36,000 psi

STEEL PILING: Piling in end bents 1 & 6 shall be HP 10x42 and shall be driven to a minimum safe bearing capacity of 55 tons per pile. Piling in int. bents 2 - 5 shall be HP 12x53 and shall be driven to a minimum safe bearing capacity of 70 tons per pile. All piling shall be driven with an approved air, steam or diesel hammer. Piling in end bents shall be driven after embankment to bottom of cap is in place. Piling in bents 2 - 5 shall have a minimum penetration of 20' below the excavated channel surface. Lengths of piling shown are for estimating quantities and for use in determining payment for cut-off and build-up in accordance with the standard specifications. On all piles the Contractor shall use Hard-Bite HP 77600 H-Pile Points manufactured by Associated Pipe and Fitting Corporation. Versa-Bite 300 P Rock Duty Series H-Pile Points manufactured by Versa-Steel, Inc. or equal as approved by the Bridge Engineer.

BRIDGE DECK: The concrete deck shall be given a tine finish as specified for final finishing in subsection 802.20 for Class 5 Bridge Roadway Surface Finish.

DETAIL DRAWINGS:	DRAWING NO.
End Bents	31019
Intermediate Bents	31019
140' Cont. Comp. W-Beam Unit	31020, 31020, 31020A

TEMPORARY BRIDGE: Construct a 140' long temporary bridge approx. 40' upstream. The temporary bridge shall have a minimum roadway width of 24', minimum live load capacity of H15. See section 603 of the Standard Specifications. See drawing numbers 2391, 2391A and 2392A for standard temporary bridge details. If timber piling and pine timber are used on this temporary bridge structure the materials shall be treated with a preservative according to the standard specifications. See roadway plans for actual detour grade and alignment.

EXISTING BRIDGE: The existing bridge No. 2805C is 26' wide and 90' long and the superstructure consists of three R.C. Slab Spans. The substructure consists of concrete caps with steel piling.

REMOVAL AND SALVAGE: The Existing Bridge shall be removed in accordance with Section 205 of the Standard Specifications. All material from the existing bridge shall become the property of the Contractor except the metal bridge railing which shall remain the property of the state.

BRIDGE ENGINEER

LAYOUT OF BRIDGE OVER OTTER CREEK (RT. FRONTAGE ROAD) CROOKED, HURRICANE, AND OTTER CREEK STRS. & APPRS. (E.B. LANE) SALINE & PULASKI COUNTIES

INT. ROUTE 30 SEC. 23

ARKANSAS STATE HIGHWAY COMMISSION

LITTLE ROCK, ARK.

DRAWN BY: WMAJ. DATE: 6-22-90
CHECKED BY: GEC DATE: 7-23-90
DESIGNED BY: GEC DATE: 5-90
SCALE: 1" = 20'

BRIDGE NO. 63570 DRAWING NO. 31018

1, 500, 3000, 1618, RWME548, B1618X2.L05

DATE REVISED	DATE FILMED	DATE REVISED	DATE FILMED	FED ROAD DIST NO	STATE	FED AID PROJ. NO.	SHEET NO	TOTAL SHEETS
				6	ARK.			
				JOB NO.		60452	63	118
				(1) G357C		BENT 31019		

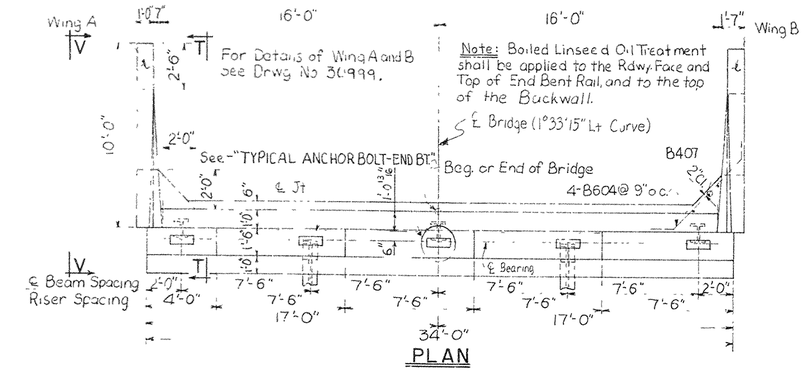

PLAN

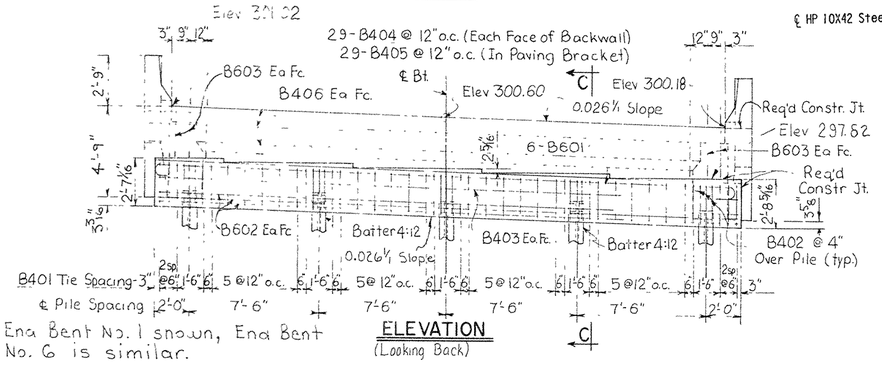

Note: End Bent No. 1 shown, End Bent No. 6 is similar.

ELEVATION
(Looking Back)

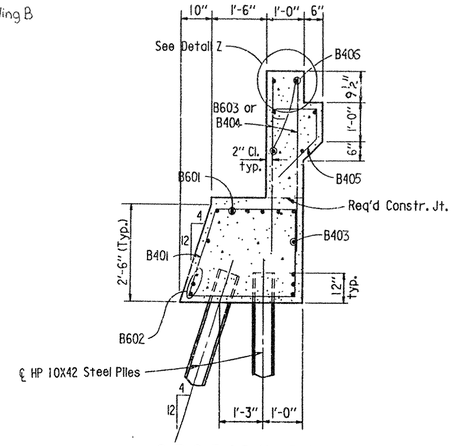

SECTION C-C
1/2" = 1'-0"

BAR LIST – PER BENT

Mark	No. Req'd Int.	No. Req'd End	Length	A	B	Pin Dia.
B401	–	38	9'-11"	2'-2"	2'-11"	2"
B402	–	15	6'-6"	2'-2"	2'-11"	2"
B403	–	2	33'-8"	–	–	Str.
B404	–	58	3'-10"	–	–	Str.
B405	–	29	3'-11"	1'-2"	4½"	2"
B406	–	6	34'-10"	–	–	2"
B407	–	6	3'-7"	–	–	Str.
B408	2	–	32'-10"	–	–	Str.
B409	40	–	10'-0"	2'-8"	2'-2"	2"
B410	15	–	7'-4"	2'-8"	2'-2"	2"
B601	–	6	35'-0"	33'-8"	6"	4½"
B602	–	6	33'-8"	–	–	Str.
B603	–	8	4'-2"	–	–	Str.
B604	–	8	7'-3"	5'-3"	1'-0"	4½"
B605	6	–	34'-0"	32'-8"	6"	4½"
B606	6	–	32'-8"	–	–	Str.

Bending Diagrams
(Dimensions are out to out of bars.)

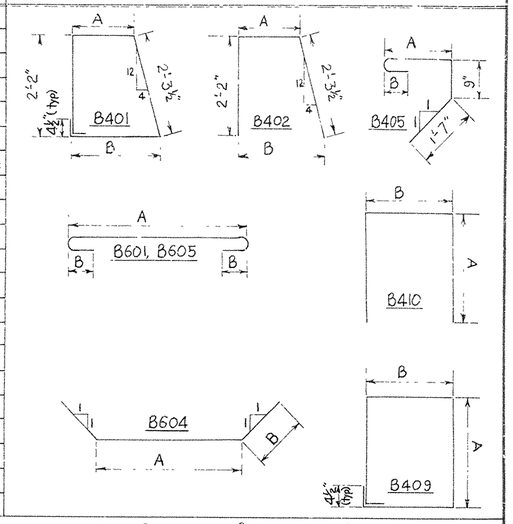

Note: For Bar List of Wing and Rail, see drwg. no. 30999.

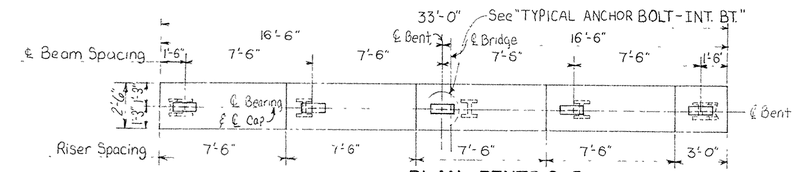

PLAN-BENTS 2-5

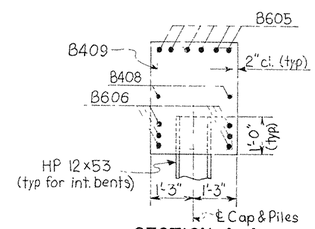

SECTION A-A
1/2" = 1'-0"

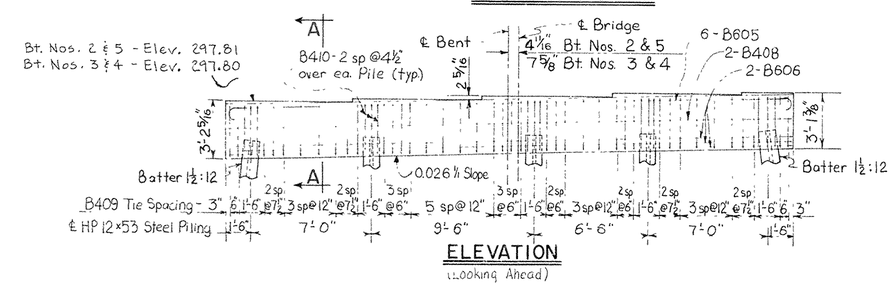

ELEVATION
(Looking Ahead)

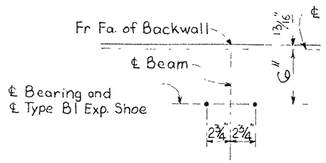

TYPICAL ANCHOR BOLT
END BT.
1½" = 1'-0"

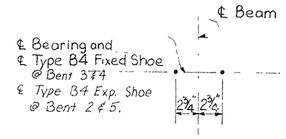

TYPICAL ANCHOR BOLT
INT. BT.
1½" = 1'-0"

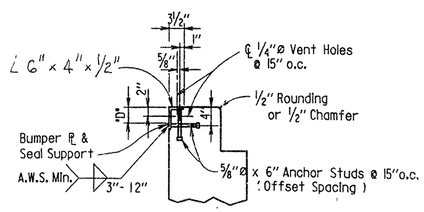

Note: For Joint Support Details & Dimension "D" see dwg. no. 31002.

DETAIL Z
3/4" = 1'-0"

All concrete shall be Class "S" with a minimum 28 day compressive strength f'c of 3,500 psi. Concrete shall be poured in the dry and all exposed corners to be chamfered 3/4" unless otherwise noted.

All reinforcing steel shall conform to ASTM A615 or A617, Grade 60 (yield strength = 60,000 psi.).

Backwall shall not be poured before beams are in place.

Structural steel in end bents shall be ASTM A36 and shall be paid for as "Structural Steel in Beam Spans (A36)".

If anchor bolts are drilled into cap, top reinforcing bars shall be properly placed to avoid damage.

For additional information see layout.

STATE OF ARKANSAS REGISTERED PROFESSIONAL ENGINEER No. 1779

DETAILS OF BENTS
OTTER CREEK
(RIGHT FRONTAGE ROAD)

INT. ROUTE 30 SEC. 23

ARKANSAS STATE HIGHWAY COMMISSION
LITTLE ROCK, ARK.

DRAWN BY BSA DATE 8-8-90
CHECKED BY Allen L. Brown DATE 08/28/90
DESIGNED BY GEC DATE 8-2-90
SCALE: 1/4" = 1'-0" or as Shown

BRIDGE ENGINEER

BRIDGE NO. 6357C DRAWING NO. 31019

DATE REVISED	DATE FILMED	DATE REVISED	DATE FILMED	FED. ROAD DIST. NO.	STATE	FED. AID PROJ. NO.	SHEET NO.	TOTAL SHEETS
				6	ARK.			
				JOB NO.		60452	64	118
				(1) 6357C		SPAN DETAILS	31020	

℄ New Bridge

Note: Boiled Linseed Oil Treatment shall be applied to the Roadway Surface and the Face and Top of Concrete Parapet Rail.

(2) Tolerance: Minus = 1/4"
Plus: Equal to amount of slab thickening used to meet slab thickness tolerance
See "ADJUSTMENT FOR SLAB THICKNESS TOLERANCE" on drwg. no. 31002.

Slab Reinforcing:

Transverse: S601E @ 7 1/2" o.c. in top
S501E @ 7 1/2" o.c. in bottom
S502E in top (For Open Parapet Rail only)

Longitudinal: S401F in top & bottom (placed as shown - 18" max.)
S602E in top (placed as shown)

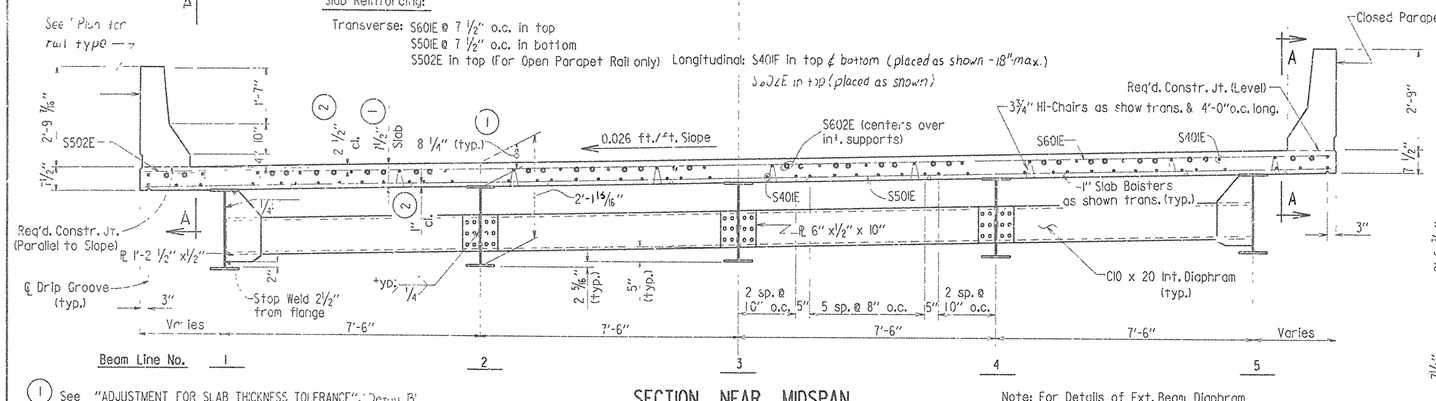

(1) See "ADJUSTMENT FOR SLAB THICKNESS TOLERANCE", Detail B' drwg. no. 31002.

SECTION NEAR MIDSPAN

1/2" = 1'-0"

Note: For Details of Ext. Beam Diaphram Connection, See drwg. no. 31002.

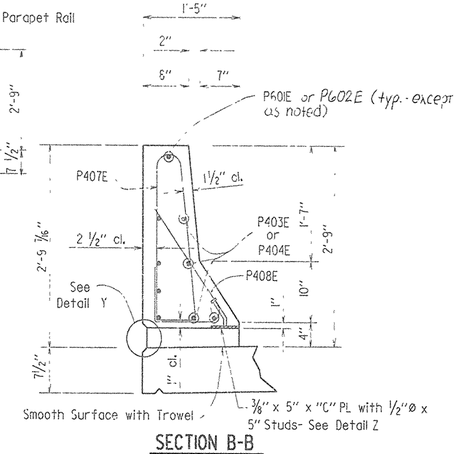

SECTION B-B

1" = 1'-0"

BAR LIST - PER UNIT

Mark	No. Req'd.	Length	Pin. Dia.
P401E	250	6'-4"	2"
P402E	250	5'-6"	2"
P403E	20	11'-11"	Str.
P404E	36	9'-6"	Str.
P405E	24	12'-1"	Str.
P406E	54	9'-7"	Str.
P407E	70	5'-10"	2"
P408E	70	3'-2"	2"
P601E	10	11'-11"	Str.
P602E	45	9'-7"	Str.
S401E	280	36'-2"	Str.
S501E	224	34'-6"	Str.
S502E	84	4'-4"	Str.
S601E	224	34'-6"	Str.
S602E	144	17'-6"	Str.

Bending Diagrams

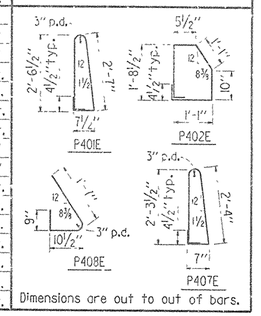

Dimensions are out to out of bars.

Note: Bars designated with an "E" shall be epoxy coated.

Expansion Device: Rdwy. C 15 x 33.9 Conn. L's 6" x 3 1/2" x 3/8" x 8"
Detail Device 1/8" high & provide 1/4" Shims using 2- 1/16" & 1- 1/8" PLs

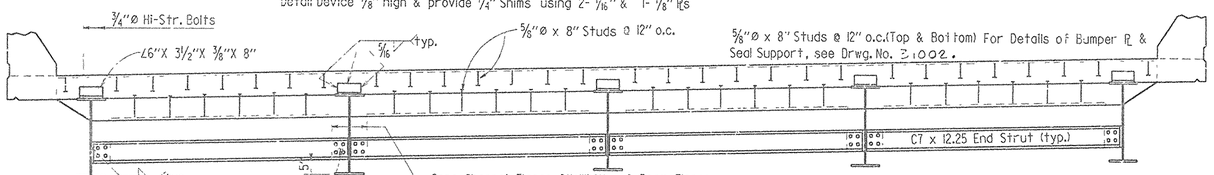

VIEW AT ℄ JOINT

1/2" = 1'-0"

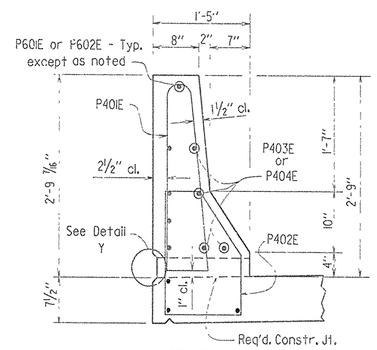

SECTION C-C

1" = 1'-0"

GENERAL NOTES

All Structural Steel shall be A36. All Structural Steel shall be paid for at the price bid per pound for "STRUCTURAL STEEL IN BEAM SPANS (A36)".

Beams are considered main load carrying members and shall meet the longitudinal Charpy V - Notch test specified in Section 807.05 of the Standard Specifications.

All beams shall be blocked in their true position in the shop. The camber, length of Sections, distance between bearings and openings of joint shall be measured with the beams in this position and this information shall become a part of the permanent record of the job. The component parts shall be match marked in this assembly and these marks shall be shown on the erection diagram. All beam dimensions are based on a temperature of 60°F. A tolerance of ±1/4" is allowed for camber.

Design Specifications: AASHTO 1989 with Interim Specifications

Live loading: HS20 Method of Design: Load Factor

	Interior Beam	Exterior Beam
Dead Load:		
A. To W-Beam	698 plf + 1.3 (Wt./Ft. of W-Bm.)	562 plf + 1.3 (Wt./Ft. of W-Bm.)
B. To Composite Beam		
Open Parapets	278 plf *	333 plf *
Closed Parapets	278 plf *	347 plf *
Live Load: To each composite beam	1.364 wheels + impact	1.277 wheels + impact

* Includes 154 plf future wearing surface

Material Strength:
Class S(AE) Concrete (N-8) f'c = 4,000 p.s.i.
Reinforcing Steel (A615 or A617) fy = 60,000 p.s.i.
Structural Steel (A36) Fy = 36,000 p.s.i.

For additional notes and Common Details; drwg. no. 31002.

Structural Steel shall be painted aluminum.

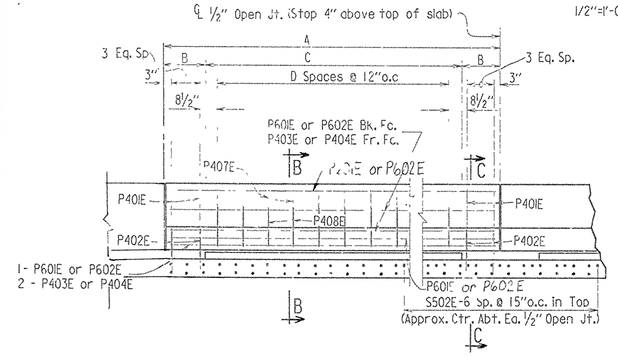

A	B	C	D
12'-5 3/8"	2'-2 11/16"	8'-0"	7
9'-11 1/2"	1'-11 3/4"	6'-0"	5

SECTION A-A (FOR OPEN PARAPET RAIL)

3/8" = 1'-0"

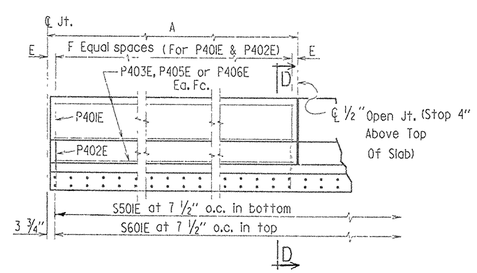

A	E	F
12'-5 3/8"	8 11/16"	11
12'-6 5/8"	9 5/16"	11
10'-0 1/2"	6 1/4"	9

Note: Transverse Reinforcing is measured along ℄ Bridge.

SECTION A-A (FOR CLOSED PARAPET RAIL)

3/8" = 1'-0"

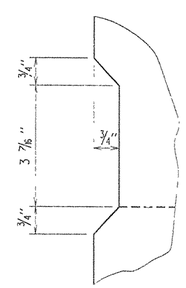

DETAIL Y

N.T.S.

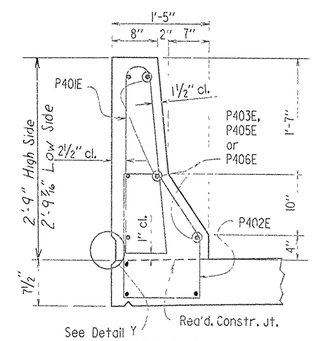

SECTION D-D

1" = 1'-0"

SHEET 1 OF 2

DETAILS OF
140'-0" CONTINUOUS COMPOSITE W - BEAM UNIT
OTTER CREEK
(RIGHT FRONTAGE ROAD)
ROUTE 30 SEC. 22
ARKANSAS STATE HIGHWAY COMMISSION
LITTLE ROCK, ARK.

DRAWN BY: TEB DATE: 8/24/90
CHECKED BY: Calvin L Cooke DATE: 10-02-90 SCALE: As Shown
DESIGNED BY: GEC DATE: 7-31-90
BRIDGE NO. 6357C DRAWING NO. 31020

BRIDGE ENGINEER

1,550,3000,1612,TEBE549,BRI618XX2.SI

DATE REVISED	DATE FILMED	DATE REVISED	DATE FILMED	FED. ROAD REGION	STATE	FED. AID PROJ. NO.	SHEET NO.	TOTAL SHEETS
				6	ARK.			
				JOB NO		60452	65	118
				1 6357C		SPAN DETAILS	31020A	

Note: For details of STUD SHEAR CONNECTORS, See drwg. no. 31002.

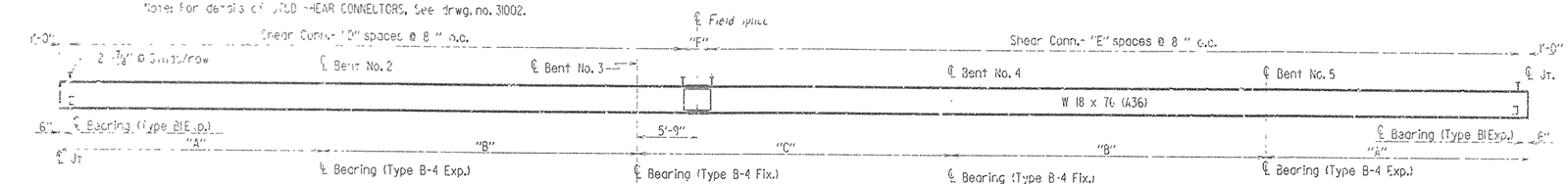

BEAM ELEVATION

N.T.S.

TABLE OF VARIABLES

Beam Line No.	Beam Length ℄ Joint - to - ℄ Joint	A	B	C	D	E	F
1	139' 5 1/16"	24'-10 3/4"	29'-10 9/16"	29'-10 1/16"	87	115	2'-9 1/8"
2	139'-8 7/16"	24' 11 3/8"	29'-11 1/4"	29'-11 3/16"	87	115	3'-0 7/8"
3	139'-11 7/8"	25'-0"	30'-0"	29'-11 7/8"	87	115	3'-3 1/4"
4	140'-3 5/16"	25'-0 5/8"	30'-0 3/4"	30'-0 9/16"	88	115	2'-11 5/16"
5	140'-6 11/16"	25'-1 1/4"	30'-1 7/16"	30'-1 5/16"	88	116	2'-6 11/16"

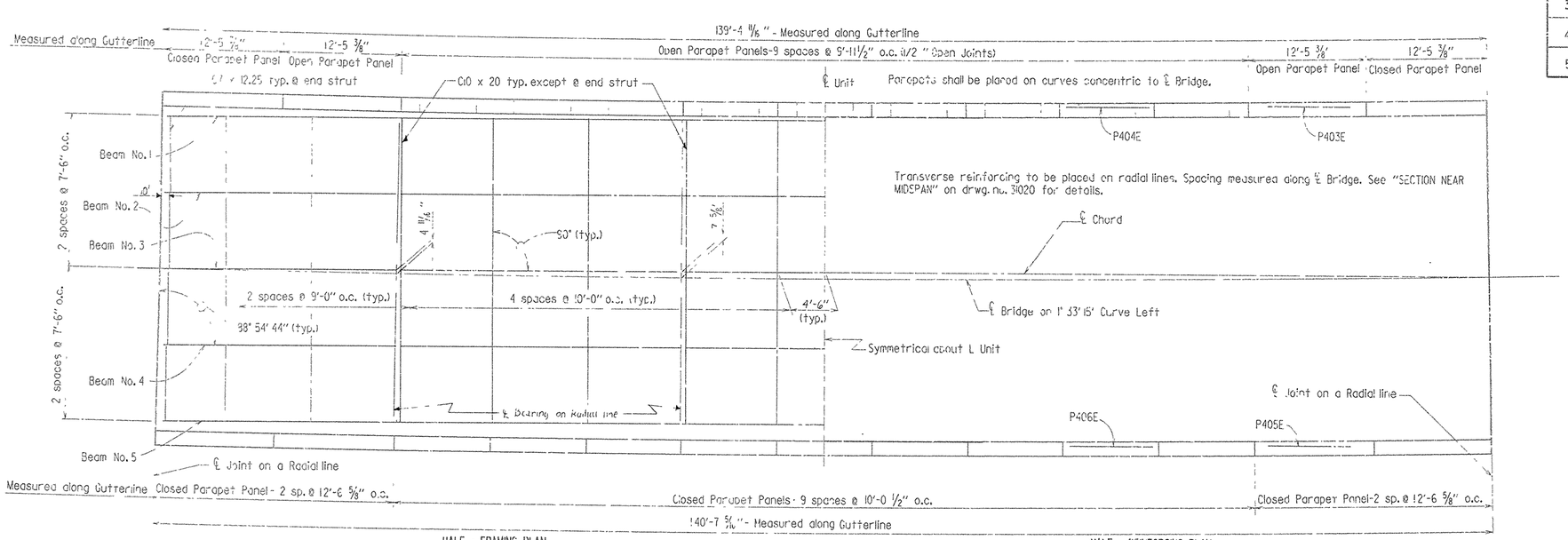

PLAN

5/32" = 1'-0"

Beams are on chords parallel to ℄ Chord measured from ℄ Joint at ℄ Bridge

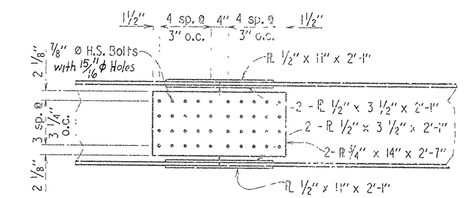

FIELD SPLICE

3/4" = 1'-0"

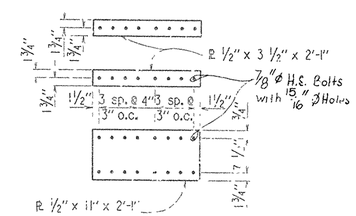

FLANGE SPLICE PLATES

3/4" = 1'-0"

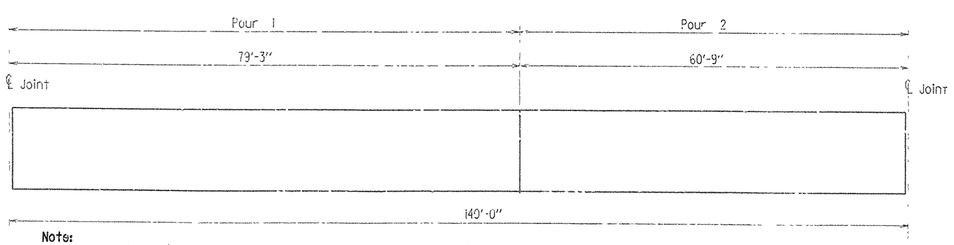

Note:
Pour 1 must be placed before Pour 2 can be placed. A minimum of 72 hours shall elapse between pours.
Any rolling pours made before the entire slab unit has been placed must be approved by the Bridge Engineer.
At the contractor's option, the entire bridge slab may be poured in one continuous operation.

SLAB POURING SEQUENCE MEASURED AT ℄ BRIDGE

N.T.S.

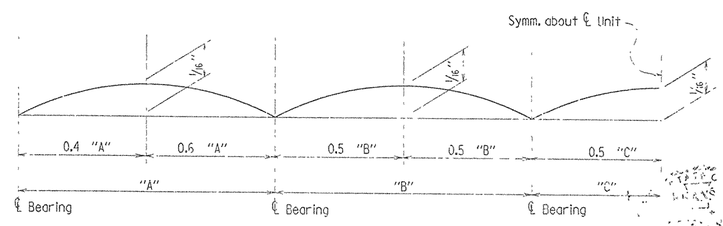

DEAD LOAD DEFLECTION DIAGRAM

N.T.S.

BRIDGE ENGINEER

SHEET 2 OF 2

DETAILS OF

140'-0" CONTINUOUS COMPOSITE W- BEAM UNIT

OTTER CREEK

(RIGHT FRONTAGE ROAD)

ROUTE 30 SEC. 23

ARKANSAS STATE HIGHWAY COMMISSION

LITTLE ROCK, ARK.

DRAWN BY: TEB DATE: 8/24/90
CHECKED BY: Collin A. Boone DATE: 10-01-90 SCALE: As Noted
DESIGNED BY: GFC DATE: 7-31-90
BRIDGE NO 6357C DRAWING NO. 31020A

1,3000,550,618,TEbE549,B1638.S2