DATE REVISED	DATE FILMED	DATE REVISED	DATE FILMED	FED. ROAD NO.	STATE	FED. AID PROJ. NO.	SHEET NO.	TOTAL SHEETS
11-21-84	11-27-84			6	ARK.	BRRS-A220(1)		
				JOB NO.		2961	11	65

(1) 6071-6075-QUANTITIES-26767

SCHEDULE OF BRIDGE QUANTITIES

BRIDGE NUMBER / CODE NUMBER / NAME PLATE TITLE	UNIT OF STRUCTURE	ITEM NO.	801	802	SP & 802	803	804	SP & 805	SP & 805	812	205	SP & 603
		ITEM	COMMON EXCAVATION FOR STRUCTURES-BRIDGE	CLASS S CONCRETE	CLASS S (AE) CONCRETE	BOILED LINSEED OIL	REINFORCING STEEL (GRADE 60)	PRECAST CONCRETE PILING (16" OCT. OR 16" SQUARE)	TEST PILES (16" OCT. OR 16" SQUARE)	BRIDGE NAME PLATES (TYPE C)	REMOVAL OF EXISTING BRIDGE STRUCTURES	TEMPORARY BRIDGE STRUCTURES
		UNIT	CUBIC YARD	CUBIC YARD	CUBIC YARD	GALLON	POUND	LINEAR FOOT	LINEAR FOOT	EACH	LUMP SUM	LUMP SUM
6071 / X020 / BIG CREEK	END BENT NOS. 1 AND 5		41	15.90			2,084	245	40			
	INTERMEDIATE BENT NOS. 2 THRU 4			20.60			2,957	680	45			
	2-35'-0" R.C. SLAB END SPANS				152.66	5.8	22,620			1		
	2-35'-0" R.C. SLAB INTERMEDIATE SPANS				151.64	5.8	22,459					
	TOTAL FOR BRIDGE NO. 6071		41	36.50	304.30	11.6	50,120	925	85	1	0.11	0.2
6072 / X020 / BRUSHY CREEK	END BENT NOS. 1 AND 5		52	15.90			2,084	245	40			
	INTERMEDIATE BENT NOS. 2 THRU 4			20.60			2,957	680	45			
	2-35'-0" R.C. SLAB END SPANS				152.66	5.8	22,620			1		
	2-35'-0" R.C. SLAB INTERMEDIATE SPANS				151.64	5.8	22,459					
	TOTAL FOR BRIDGE NO. 6072		52	36.50	304.30	11.6	50,120	925	85	1	0.11	0.2
6073 / X020 / HUDGIN CREEK (STA. 534+00)	END BENT NOS. 1 AND 5		34	15.90			2,084	245	40			
	INTERMEDIATE BENT NOS. 2 THRU 4			20.60			2,957	680	45			
	2-35'-0" R.C. SLAB END SPANS				152.66	5.8	22,620			1		
	2-35'-0" R.C. SLAB INTERMEDIATE SPANS				151.64	5.8	22,459					
	TOTAL FOR BRIDGE NO. 6073		34	36.50	304.30	11.6	50,120	925	85	1	0.09	0.2
6074 / X020 / HUDGIN CREEK (STA. 540+25)	END BENT NOS. 1 AND 4		34	15.90			2,084	245	40			
	INTERMEDIATE BENT NOS. 2 AND 3			13.70			1,983	440	45			
	2-35'-0" R.C. SLAB END SPANS				152.66	5.8	22,620			1		
	1-35'-0" R.C. SLAB INTERMEDIATE SPAN				75.84	2.9	11,233					
	TOTAL FOR BRIDGE NO. 6074		34	29.60	228.50	8.7	37,920	685	85	1	0.07	0.2
6075 / X020 / SANDERS CREEK	END BENT NOS. 1 AND 7		41	15.90			2,084	210	35			
	INTERMEDIATE BENT NOS. 2 THRU 6			34.40			4,905	1015	40			
	2-35'-0" R.C. SLAB END SPANS				152.66	5.8	22,620			1		
	4-35'-0" R.C. SLAB INTERMEDIATE SPANS				303.24	11.6	44,921					
	TOTAL FOR BRIDGE NO. 6075		41	50.30	455.90	17.4	74,530	1225	75	1	0.18	0.2
	TOTAL FOR JOB NO. 2961		202	189.40	1597.30	60.9	262,810	4685	415	5	* 0.56	1.0

* REMAINING PORTION IS ROADWAY ITEM

SCHEDULE OF BRIDGE QUANTITIES
HWY. 114 STRS. & APPRS.
CLEVELAND COUNTY
ROUTE 114 SEC. 0

ARKANSAS STATE HIGHWAY COMMISSION
LITTLE ROCK, ARK.

DALLAS VIRE
DESIGN SECTION SUPERVISOR

DRAWN BY: TEB DATE: 24 AUG 84
CHECKED BY: DV DATE: 8-28-84 SCALE: NONE
DESIGNED BY: DATE:

Verel Pinkerton
BRIDGE ENGINEER

BRIDGE NOS. 6071-6075

DRAWING NO. 26767

A F 7600

332

DATE REVISED	DATE FILMED	DATE REVISED	DATE FILMED	FED. ROAD NO.	STATE	FED. AID PROJ. NO.	SHEET NO.	TOTAL SHEETS
				6	ARK.			
				JOB NO.		2961	23	65
				① 6072	- LAYOUT - 26771			

NOTES: FOR R/W DATA AND GUARD RAIL - SEE ROADWAY PLANS.
FOR CONCRETE SPILLWAYS AT ENDS OF BRIDGE - SEE ROADWAY PLANS
APPROX. 262 CU. YD. CHANNEL EXCAVATION

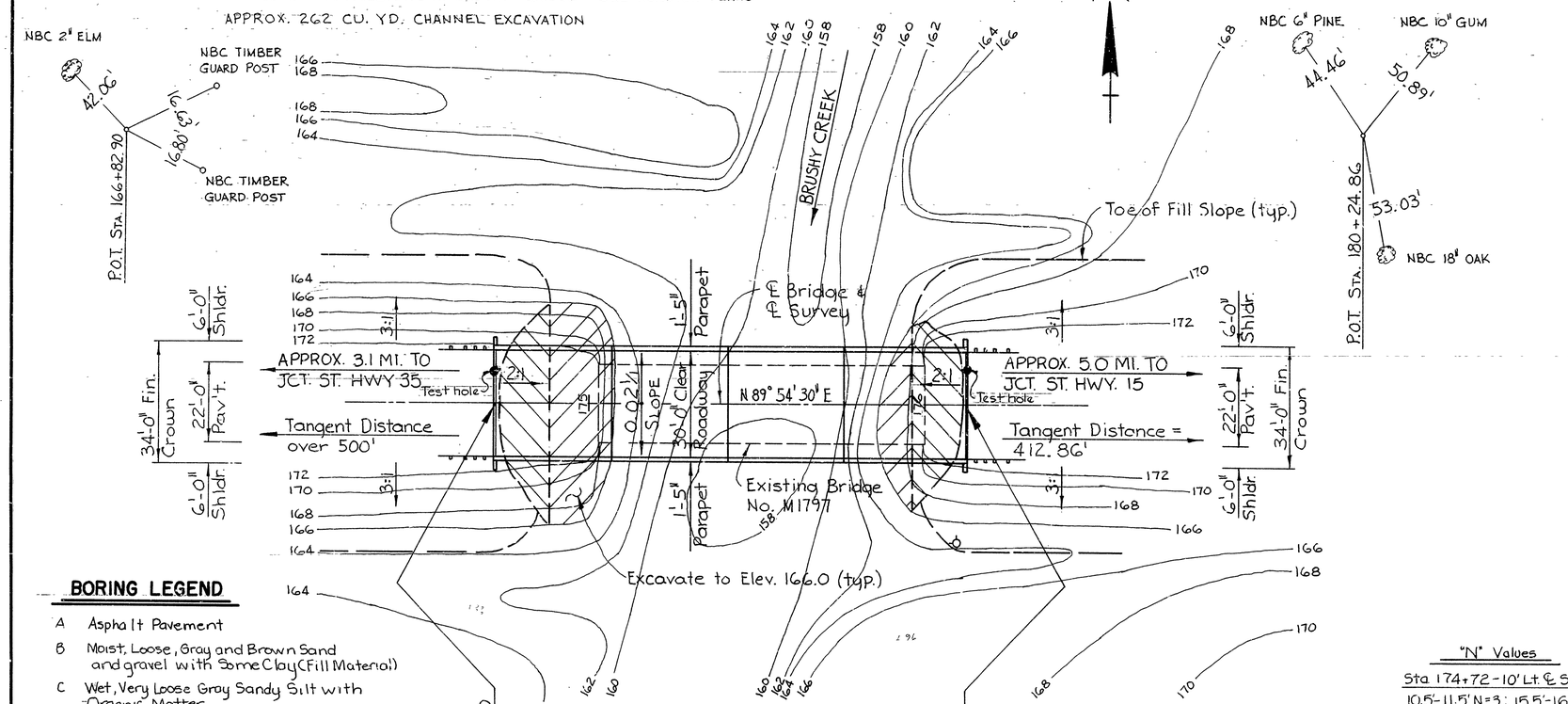

PLAN

Total Length of Bridge = 140'-0"
(4 - 35'-0" R.C. Slab Spans)

LEVEL GRADE

BORING LEGEND

A Asphalt Pavement
B Moist, Loose, Gray and Brown Sand and gravel with Some Clay (Fill Material)
C Wet, Very Loose Gray Sandy Silt with Organic Matter
D Moist, Soft, Brown and Gray Silty, Sandy Clay
E Wet, Very Loose, Gray Silty Sand and Gravel
F Moist, Stiff, Gray Silty, Sandy, Clay
G Wet, Medium Dense, Gray Sand and Gravel
H Moist, Very Stiff to Hard Gray Sandy Clay with Silt Lenses
J Moist, Medium Dense, Mottled Brown Sandy Clay with some Gravel
K Moist, Medium Dense Brown Silty Sand
L Moist, Very Stiff, Gray Silty, Sandy Clay

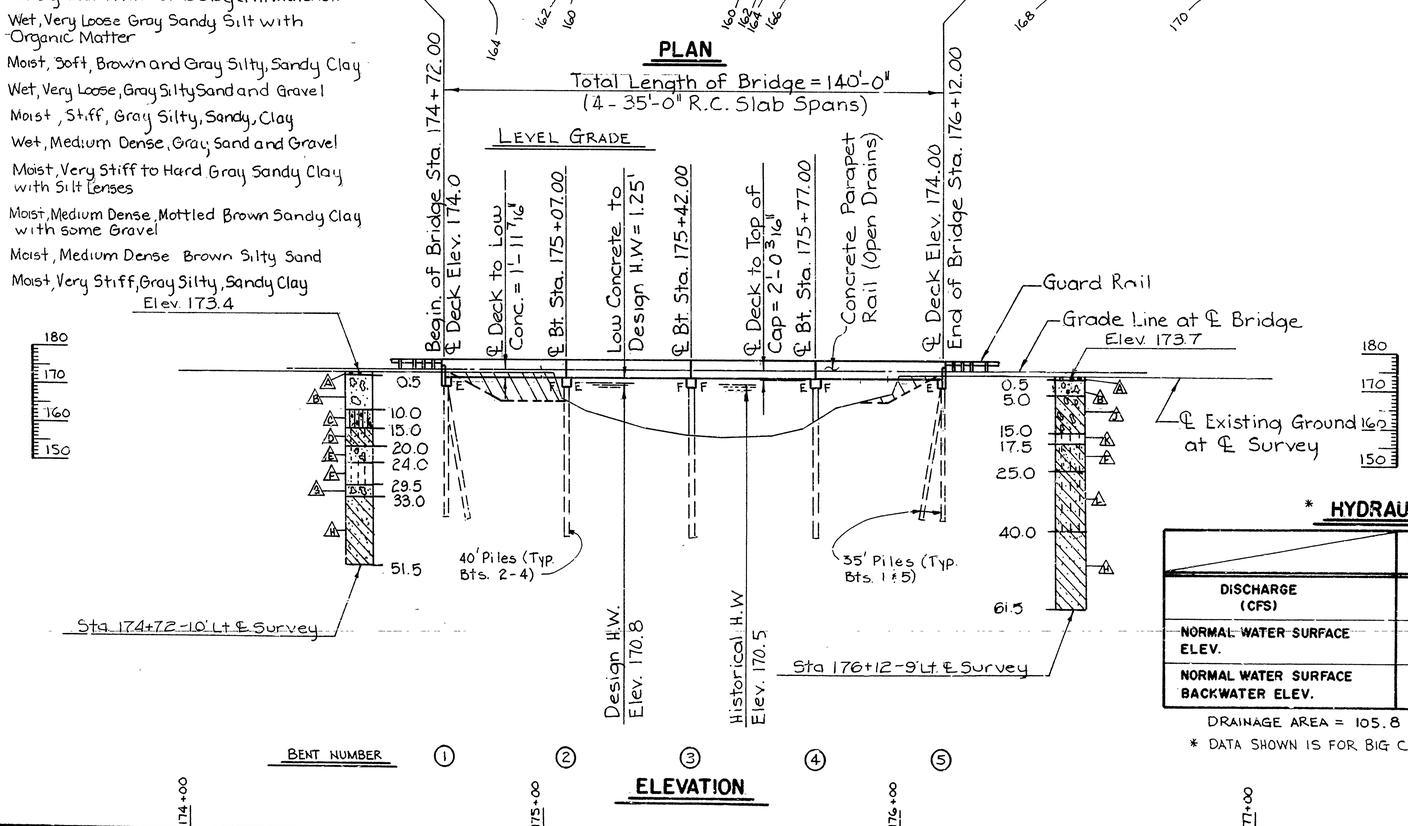

"N" Values

Sta. 174+72-10' Lt. ℄ Survey
10.5'-11.5' N=3; 15.5'-16.5' N=4; 20.5'-21.5' N=4; 24.5'-25.5' N=12; 29.5'-30.5' N=20; 33.5'-34.5' N=24; 40.5'-41.5' N=31; 45.5'-46.5' N=22; 50.5'-51.5' N=27

Sta. 176+12-9' Lt. ℄ Survey
55'-6.5' N=5; 10.5'-11.5' N=20; 15.5'-16.5' N=17; 20.5'-21.5' N=11; 25.5'-26.5' N=17; 30.5'-31.5' N=23; 35.5'-36.5' N=23; 40.5'-41.5' N=25; 50.5'-51.5' N=27; 55.5'-56.5' N=29; 60.5'-61.5' N=25

* HYDRAULIC DATA

	DESIGN FLOOD (Q50)	BASIC FLOOD (Q100)
DISCHARGE (CFS)	13,860	15,560
NORMAL WATER SURFACE ELEV.	170.8	171.2
NORMAL WATER SURFACE BACKWATER ELEV.	173.6	174.4

DRAINAGE AREA = 105.8 SQUARE MILES
* DATA SHOWN IS FOR BIG CREEK AND BRUSHY CREEK COMBINED.

GENERAL NOTES

BENCH MARK: N.I.S. 6" PINE 40' LT. STA. 179+74, ELEV. 173.39.

ALL CONCRETE SHALL BE POURED IN THE DRY.

ALL PILING SHALL BE 16" OCT. OR SQ. PRECAST CONCRETE AND SHALL BE DRIVEN WITH AN APPROVED AIR, STEAM, OR DIESEL HAMMER TO A MINIMUM BEARING CAPACITY OF 44 TONS PER PILE, AND TO A MINIMUM PENETRATION OF 20' BELOW THE GROUND LINE. LENGTHS OF PILING SHOWN ARE ASSUMED FOR ESTIMATING QUANTITIES ONLY. ACTUAL LENGTHS TO BE DETERMINED IN THE FIELD. PILE SHAPES SHALL NOT BE MIXED. PILES IN END BENTS TO BE DRIVEN AFTER EMBANKMENT TO BOTTOM OF CAP IS IN PLACE. DRIVE ONE 45' TEST PILE IN BENT 2 AND ONE 40' TEST PILE IN BENT 5.

FOR DETAILS OF END BENTS, AND INTERMEDIATE BENTS, SEE DWG. NO. 26769
FOR DETAILS OF 35'-0" R.C. SLAB SPANS, SEE DWG. NO. 26770
FOR DETAILS OF PRECAST CONCRETE PILING, SEE DWG. NO. 2383

SPECIFICATIONS: ARKANSAS STATE HIGHWAY COMMISSION STANDARD SPECIFICATIONS FOR HIGHWAY CONSTRUCTION, EDITION OF 1978 AND APPLICABLE SPECIAL PROVISIONS.

DESIGN SPECIFICATIONS: AASHTO 1977 EDITION WITH INTERIMS.

LIVE LOADING: HS20

METHOD OF DESIGN: LOAD FACTOR

UNIT STRESSES: CLASS "S" OR "S(AE)" CONCRETE = 3500 PSI
REINFORCING STEEL (GRADE 60) = 60,000 PSI

REMOVAL OF EXISTING BRIDGE: THE CONTRACTOR SHALL REMOVE THE EXISTING 97' BRIDGE (M1797) CONSISTING OF A TIMBER SUBSTRUCTURE SUPPORTING A SUPERSTRUCTURE OF TIMBER STRINGERS WITH A CONCRETE DECK AND ASHALT OVERLAY. ALL MATERIAL SHALL BECOME THE PROPERTY OF THE CONTRACTOR EXCEPT THE 60 TIMBER STRINGERS (6" X 14" X 20') AND 6 TIMBER CAPS WHICH SHALL BE RETAINED BY THE STATE.

DETOUR CONSTRUCTION: THE CONTRACTOR SHALL CONSTRUCT A 90' DETOUR BRIDGE 45' NORTH OF THE CENTERLINE SURVEY WITH A MINIMUM DECK ELEV. OF 172.0 ACCORDING TO SECTION 603 OF THE STANDARD SPECIFICATIONS.

LAYOUT OF BRIDGE OVER
BRUSHY CREEK
HWY. 114 BRS. & APPRS.
CLEVELAND COUNTY
ROUTE 114 SEC. 0

ARKANSAS STATE HIGHWAY COMMISSION
LITTLE ROCK, ARK.

DRAWN BY: TEB DATE: 3-21-84
CHECKED BY: DV DATE: 7-6-84
DESIGNED BY: DATE: 2-84
SCALE: 1" = 20'-0"

Vernal Pinkerton
BRIDGE ENGINEER

BRIDGE NO. 6072 DRAWING NO. 26771

DATE REVISED	DATE FILMED	DATE REVISED	DATE FILMED	FED. ROAD NO.	STATE	FED. AID PROJ. NO.	SHEET NO.	TOTAL SHEETS
				6	ARK.			
				JOB NO.		2961	21	65
				6071-6075-BT. DTL'S.- 26769				

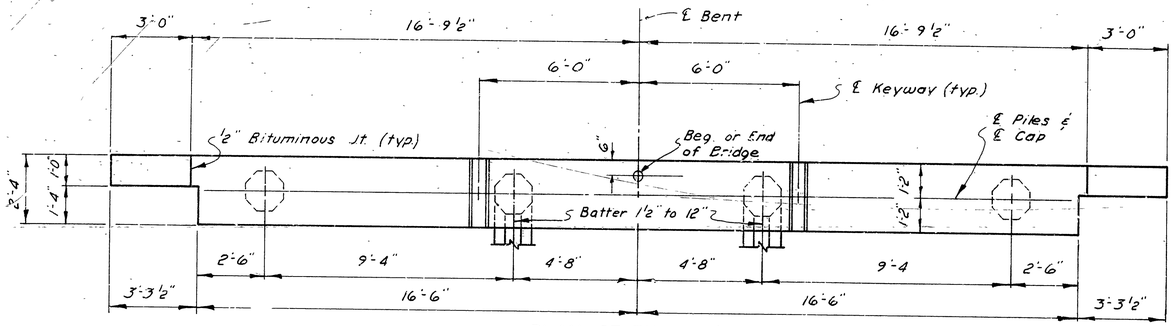

PLAN OF END BENT

Scale: 3/8" = 1'-0"

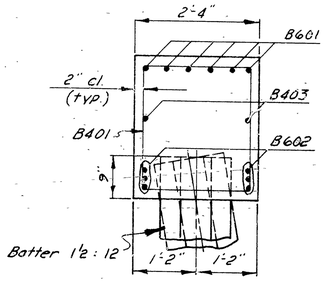

SECTION A-A

Scale: 3/4" = 1'-0"

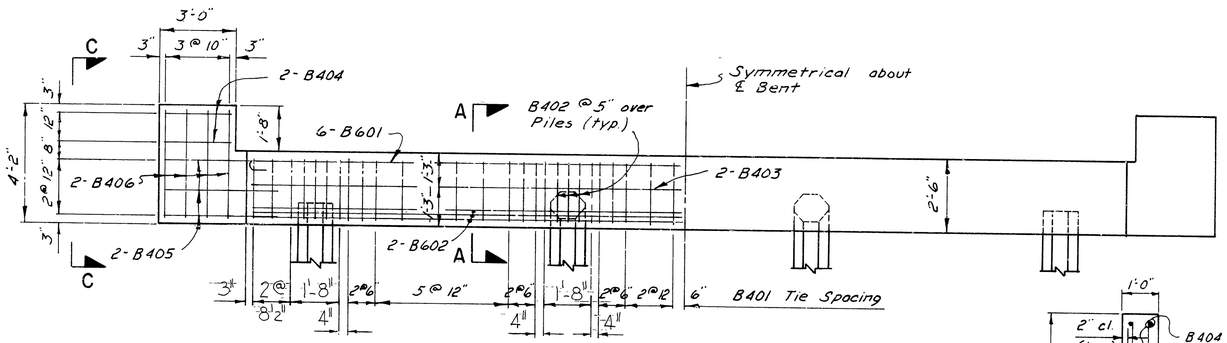

ELEVATION OF END BENT

Scale: 3/8" = 1'-0"

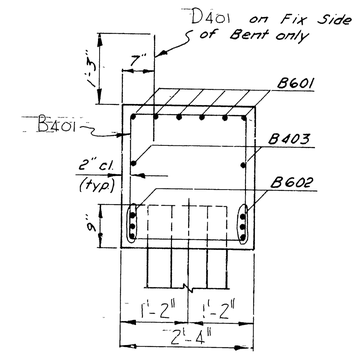

SECTION B-B

Scale: 3/4" = 1'-0"

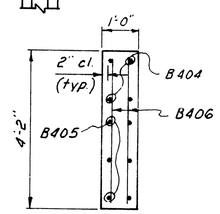

VIEW C-C

Scale: 1/2" = 1'-0"

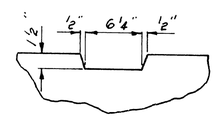

KEYWAY DETAIL

Scale: 1 1/2" = 1'-0"

BAR LIST

MARK	NO. REQ'D. END	NO. REQ'D. INT.	LENGTH	A	B	PIN DIA.
B401	42	36	9'-2"	2'-0"	2'-2"	2"
B402	12	18	6'-2"	2'-0"	2'-2"	2"
B403	2	2	32'-8"			Str.
B404	8		2'-8"			Str.
B405	12		4'-5"			Str.
B406	16		3'-10"			Str.
B601	6	6	34'-0"	32'-8"	6"	4 1/2"
B602	6	6	32'-8"			Str.
D401		*	2'-6"			STR.

BENDING DIAGRAMS

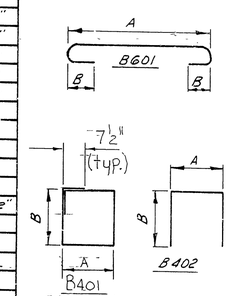

Dimensions are out to out of Bars.

* 21 Required For Fix-Exp Bent
* 42 Required For Fix.-Fix. Bent

GENERAL NOTES

ALL CONCRETE TO BE CLASS "S" AND SHALL BE POURED IN THE DRY. ALL EXPOSED CORNERS TO BE CHAMFERED 3/4" UNLESS OTHERWISE NOTED.

REINFORCING STEEL TO BE ASTM A615 OR A617, GRADE 60.

ALL PILING IN BENTS SHALL BE 16 INCH OCT. OR SQ. PRECAST CONCRETE AND SHALL BE DRIVEN TO A MINIMUM BEARING CAPACITY OF 44 TONS PER PILE.

SPECIFICATIONS: ARKANSAS STATE HIGHWAY COMMISSION STANDARD SPECIFICATIONS FOR HIGHWAY CONSTRUCTION, EDITION OF 1978 AND APPLICABLE SPECIAL PROVISIONS.

LIVE LOADING: HS20

METHOD OF DESIGN: LOAD FACTOR

UNIT STRESSES: f'c = COMPRESSIVE STRENGTH OF CLASS "S" CONCRETE 3,500 PSI
fy = YIELD STRENGTH OF REINFORCING STEEL 60,000 PSI

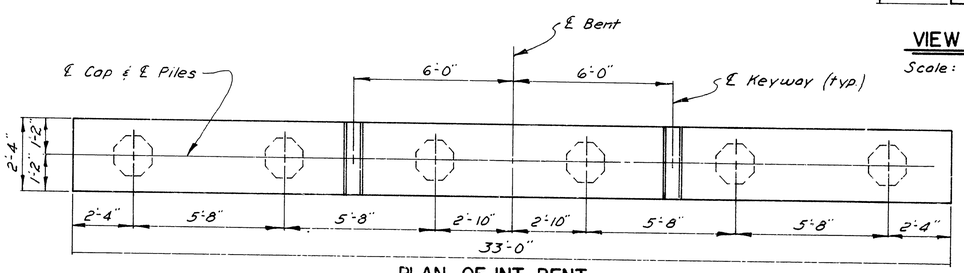

PLAN OF INT. BENT

Scale: 3/8" = 1'-0"

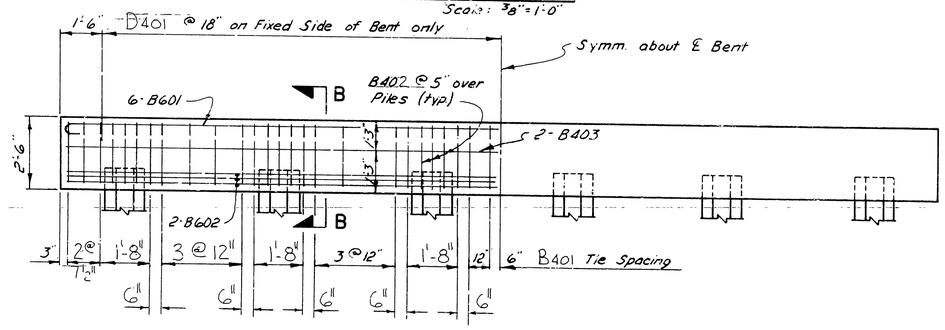

ELEVATION OF INT. BENT

SCALE: 3/8" = 1'-0"

QUANTITIES PER BENT

	CONCRETE	REINFORCING STEEL
END BENT	7.95 CU. YDS	1042 LBS.
INT. BENT FIX.-FIX.	6.88 CU. YDS	1009 LBS.
INT. BENT FIX.-EXP.	6.88 CU. YDS	974 LBS.

DETAILS OF STANDARD PILE BENTS

35'-0" R.C. SLAB SPAN
30'-0" CLEAR ROADWAY
CONCRETE PARAPET RAILING

ROUTE SEC.

ARKANSAS STATE HIGHWAY COMMISSION
LITTLE ROCK, ARK.

DRAWN BY: TEB DATE: 8-21-84
CHECKED BY: DATE: 8-21-84
DESIGNED BY: DATE:
SCALE: As Noted

Feral Pinkerton
BRIDGE ENGINEER

BRIDGE NOS. 6071-6075 DRAWING NO. 26769

DATE REVISED	DATE REVISED	DATE REVISED	DATE REVISED	FED. ROAD NO.	STATE	FED. AID PROJ. NO.	SHEET NO.	TOTAL SHEETS
				6	ARK.			
				JOB NO.		2961	22	65

(1) 6071-6075 SPAN DTL'S - 26770

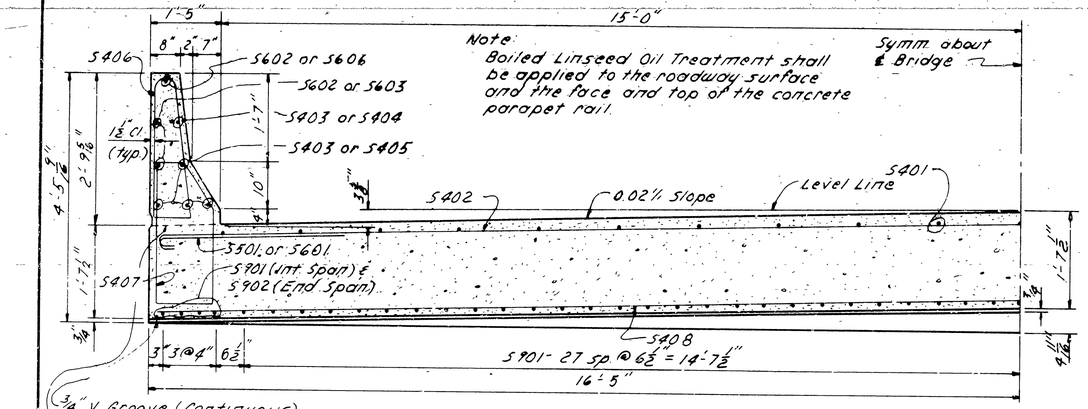

SECTION A-A

Scale: ¾" = 1'-0"

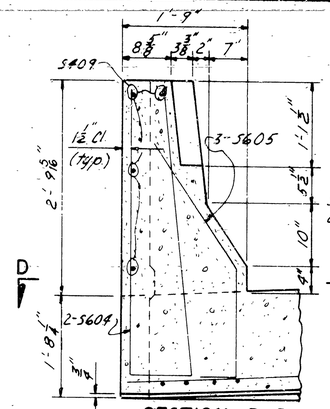

SECTION B-B

Scale: 1" = 1'-0"

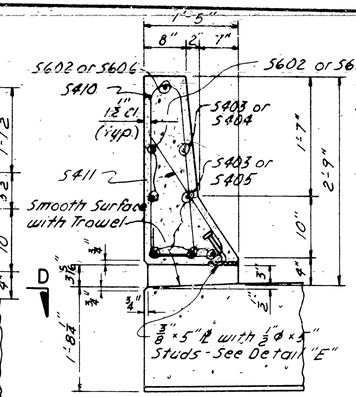

SECTION C-C

Scale: 1" = 1'-0"

Note: Drain shall taper from 3" × 8'-0" at curb to 3/16" × 8'-0" at back face of Concrete Parapet Rail.

BAR LIST PER SPAN

MK	No. Req'd. End	No. Req'd. Int.	Length	Pin Dia	Bending Diagrams
S401	21	21	34'-8"	str.	
S402	25	25	33'-6"	3"	
S403	20	30	11'-4"	str.	
S404	2		10'-10"	str.	
S405	8		11'-10"	str.	
S406	44	48	6'-10"	2"	
S407	44	48	7'-9"	2"	
S408	55	55	32'-4"	str.	
S409	8		1'-0"	str.	
S410	54	54	6'-4"	2"	
S411	54	54	3'-2"	2"	
S501	24	24	5'-0"	str.	
S601	12	12	5'-8"	4½"	
S602	12	18	11'-4"	str.	
S603	4		11'-10"	str.	
S604	4		8'-10"	3¾"	
S605	6		4'-9"	3¾"	
S901	55	63	34'-8"	str.	
S902	8		35'-2"	str.	
S606	2		10'-10"	str.	

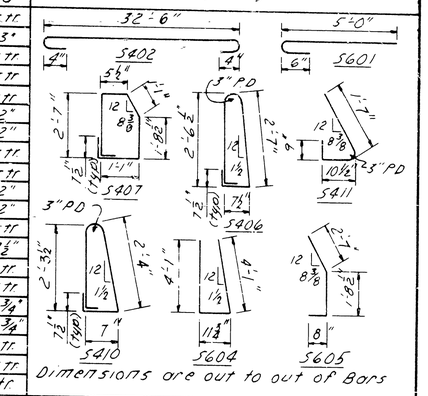

Dimensions are out to out of Bars

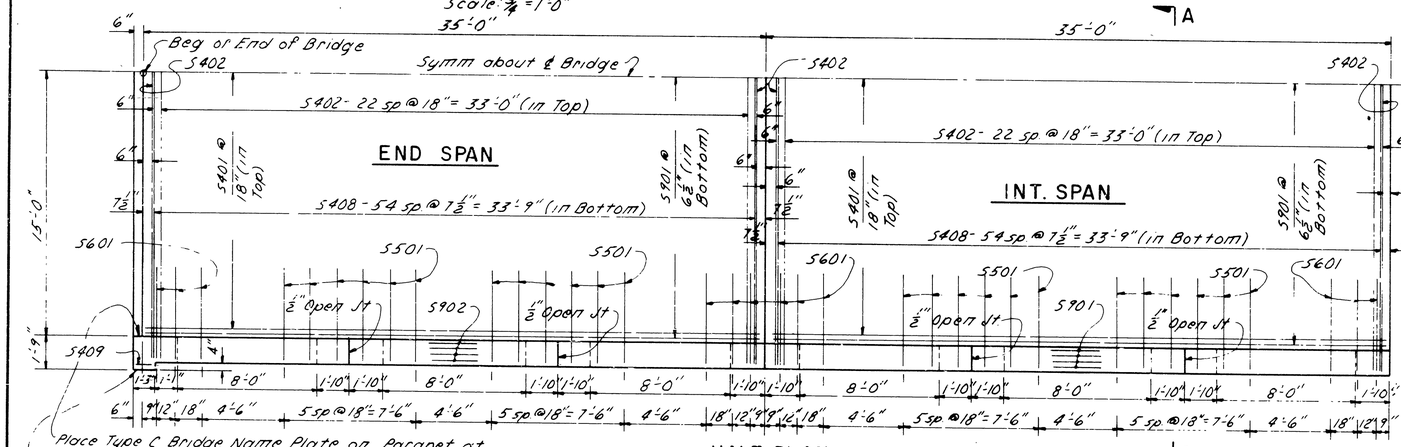

HALF PLAN

Scale: ¼" = 1'-0"

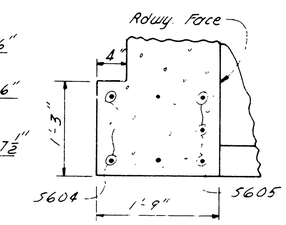

SECTION D-D

Scale: 1" = 1'-0"

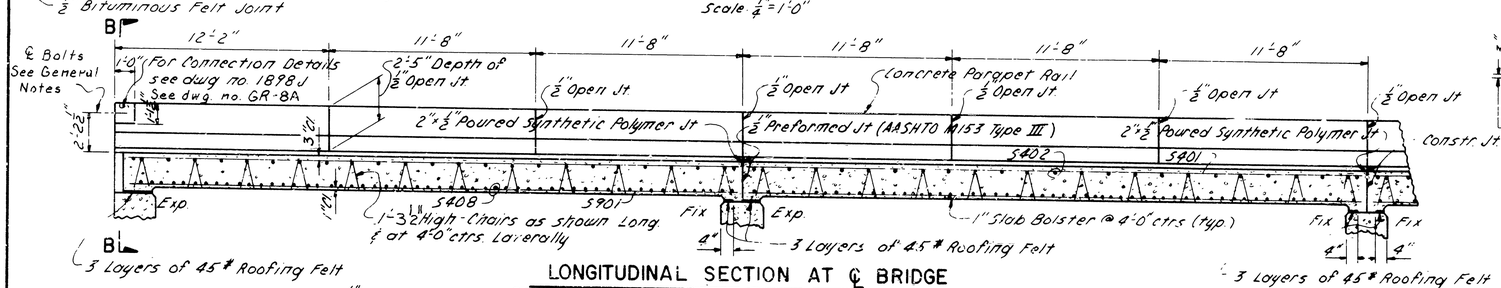

LONGITUDINAL SECTION AT ℄ BRIDGE

Scale: ¼" = 1'-0"

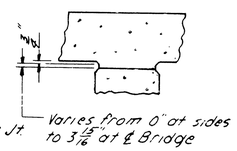

RISER DETAIL

No Scale

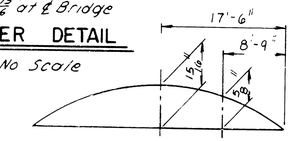

D.L. CAMBER DIAGRAM

N.T.S.

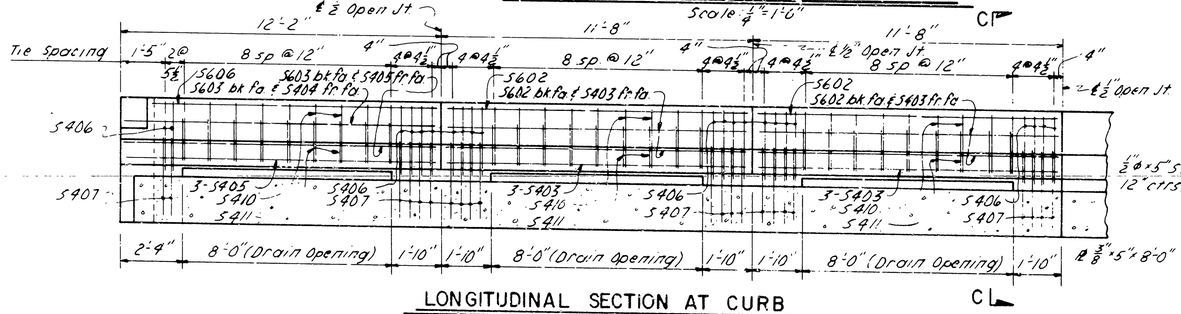

LONGITUDINAL SECTION AT CURB

Scale: ⅜" = 1'-0"

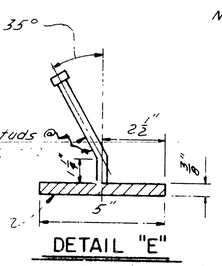

DETAIL "E"

No Scale

Note: The surfaces of the ⅜" Plates which will not be in contact with concrete shall recieve two coats of paint in the shop. These coats shall be those specified as First Shop Coat and Second Field Coat in Subsection 807.59(a) and 807.59(c) of SP 807-10.

The ½"Ø × 5" Studs shall be Granular Flux Filled, Solid Fluxed, or equal, and automatically end welded to the ⅜" Plate in accordance with recommendations of the Manufacturer.

NOTE: The concrete deck shall be given a tine finish as specified for final finishing in Subsection 802.23 for Class 6, Roadway Surface finish.

GENERAL NOTES

ALL CONCRETE TO BE CLASS S (A.E.) CONCRETE. ALL EXPOSED CORNERS TO BE CHAMFERED 3/4" UNLESS OTHERWISE NOTED.

REINFORCING STEEL TO BE ASTM A615 OR A617, GRADE 60.

BAR SUPPORTS FOR REINFORCING BARS WILL NOT BE PAID FOR DIRECTLY, BUT WILL BE CONSIDERED SUBSIDIARY TO THE ITEM "REINFORCING STEEL".

ROOFING FELT, BITUMINOUS FELT, PREFORMED JOINT, STRUCTURAL STEEL, AND POURED SYNTHETIC POLYMER JOINTS SHALL BE MEASURED AND PAID FOR AS CLASS S(AE) CONCRETE

SPECIFICATIONS: ARKANSAS STATE HIGHWAY COMMISSION STANDARD SPECIFICATIONS FOR HIGHWAY CONSTRUCTION, EDITION OF 1978, AND APPLICABLE SPECIAL PROVISIONS.

DESIGN SPECIFICATIONS: AASHTO 1977 AND INTERIMS.

DESIGN LIVE LOADING: HS20

LOAD DISTRIBUTION TO SLAB: DEAD LOAD *286 PSF; LIVE LOAD - 0.166 WHEELS/FT OF WIDTH PLUS 30% IMPACT.

UNIT STRESSES: COMPRESSIVE STRENGTH OF CLASS S OR S(AE) CONCRETE = 3,500 PSI
YIELD STRENGTH OF REINFORCEMENT = 60,000 PSI

LOAD FACTOR USED FOR DESIGN OF SLAB

Guard Rail Connection Bolts shall be ¾"×8" A325 Galvanized Bolts with 1¾" threaded. (Non-Pay Item - Subsidiary to other items.) (Type I)

* Includes 25# Future Wearing Surface.

QUANTITIES (PER SPAN)

	Concrete	Reinforcing Steel	Structural Steel
End Span	** 76.31 cu yd	11,310 Lbs	* 322 Lbs
Int Span	** 75.82 cu yd	11,230 Lbs	* 322 Lbs

* For information only; Structural Steel to be measured and paid for as Class S or S(AE) concrete.

** Concrete Quantities calculated for 2'-4" Caps

DETAILS OF STANDARD
35'-0" R.C. SLAB SPAN
30' CL. RDWY. - CONCRETE PARAPET RAIL

ROUTE SEC.

ARKANSAS STATE HIGHWAY COMMISSION
LITTLE ROCK, ARK.

DRAWN BY: K. Allen DATE: 8-22-83
CHECKED BY: MEC DATE: 8-23-83 SCALE: as noted
DESIGNED BY: STU DATE:

Vernal Pinkerton
BRIDGE ENGINEER

BRIDGE NOS. 6071-6075 DRAWING NO. 26770