ARKANSAS
DEPARTMENT OF TRANSPORTATION

STANDARD ROADWAY DRAWINGS
(ENGLISH)

ARKANSAS DEPARTMENT OF TRANSPORTATION
STANDARD ROADWAY DRAWINGS
2/13/2024

DRAWING NUMBER	DATE	TITLE
CDP-1	12-08-16	CONCRETE DITCH PAVING
CG-1	11-29-07	CURBING DETAILS
CPCR-1	10-18-96	CONCRETE PAVEMENT DETAILS CONTINUOUSLY REINFORCED
CPCR-2	03-23-89	CONCRETE PAVEMENT DETAILS CONTINUOUSLY REINFORCED DEFORMED WIRE MAT
CPCR-3	10-18-96	DETAILS OF TERMINAL JOINTS FOR CONCRETE PAVEMENT CONTINUOUSLY REINFORCED
CPCR-4	02-27-14	DETAILS OF ENTRANCE & EXIT RAMPS FOR CONCRETE PAVEMENT CONTINUOUSLY REINFORCED
CPTJ-6A	11-07-19	TRANSVERSE & LONGITUDINAL JOINTS FOR CONCRETE PAVEMENT (NON-REINFORCED)
DR-1	05-19-22	DETAILS OF DRIVEWAYS & ISLANDS
DR-2	05-19-22	DETAILS OF DRIVEWAYS & STREET TURNOUTS
DR-3	04-13-23	DETAILS OF DRIVEWAYS & STREET TURNOUTS (PAVEMENT PRESERVATION)
FES-1	10-18-96	FLARED END SECTION
FES-2	10-18-96	FLARED END SECTION
FPC-2A	01-12-00	PIPE SIPHON
FPC-9	11-16-01	DETAILS OF DROP INLETS & JUNCTION BOXES
FPC-9D	08-22-02	DETAILS OF DROP INLETS
FPC-9E	08-22-02	DETAILS OF DROP INLETS (TYPE C)
FPC-9M	08-22-02	DETAILS OF DROP INLETS (TYPE MO)
FPC-9N	07-02-98	DETAILS OF DROP INLETS AND SPILLWAY OUTLET
FPC-9S	07-26-12	DETAILS OF DROP INLET & JUNCTION BOX (TYPE ST)
G-1	08-15-91	STEEL GRATE ASSEMBLY (TYPE 1)
G-2	08-15-91	STEEL GRATE ASSEMBLY (TYPE 1)
G-3	08-15-91	STEEL GRATE ASSEMBLY (TYPE 1)
GC-1	10-18-96	GUARD CABLE
GR-5	11-07-19	GUARDRAIL DETAILS (TYPE C) STREET/ROAD BARRICADE OR TEMPORARY INSTALLATION
GR-6	05-19-22	GUARDRAIL DETAILS
GR-7	11-07-19	GUARDRAIL DETAILS
GR-8	11-07-19	GUARDRAIL DETAILS
GR-9	11-07-19	GUARDRAIL DETAILS
GR-10	11-07-19	GUARDRAIL DETAILS
GR-11	11-07-19	GUARDRAIL DETAILS
GR-12	05-14-20	GUARDRAIL DETAILS
GR-13	11-07-19	CONCRETE BARRIER WALL (PIER PROTECTION TYPE A)
GRT-1	11-07-19	GUARDRAIL DETAILS
IB-1	10-15-09	IMPACT ATTENUATION BARRIER
MB-1	11-18-04	MAILBOX DETAILS
PBC-1	01-28-15	PRECAST CONCRETE BOX CULVERTS
PCC-1	02-27-14	CONCRETE PIPE CULVERT FILL HEIGHTS & BEDDING
PCM-1	02-27-14	METAL PIPE CULVERT FILL HEIGHTS & BEDDING
PCP-1	02-27-14	PLASTIC PIPE CULVERT (HIGH DENSITY POLYETHYLENE)
PCP-2	02-27-14	PLASTIC PIPE CULVERT (PVC F949)
PCP-3	02-27-20	PLASTIC PIPE CULVERT (POLYPROPYLENE)
PM-1	02-27-20	PAVEMENT MARKING DETAILS
PM-2	05-14-20	PERMANENT PAVEMENT MARKING ON ACCESS CONTROLLED ROADWAYS
PU-1	12-08-16	DETAILS OF PIPE UNDERDRAIN
RCB-1	07-26-12	REINFORCED CONCRETE BOX CULVERT DETAILS
RCB-2	11-20-03	EXCAVATION PAY LIMITS, BACKFILL, & SOLID SODDING FOR BOX CULVERTS
RCB-3	10-12-95	METHOD OF EXTENDING EXISTING R.C. BOX CULVERTS
RRS-1	12-08-16	PAVEMENT MARKING FOR RAILROAD CROSSING
RRX-3	04-10-03	RAILROAD HIGHWAY GRADE CROSSING SIGNALS (FLASHING LIGHT TYPE)

DRAWING NUMBER	DATE	TITLE
SD-1	11-16-17	ANTENNA POLE
SD-2	09-12-13	SPAN WIRE INSTALLATION WITH COMMUNICATION CABLE CROSSING
SD-3	**02-13-24**	SPAN WIRE ASSEMBLY STEEL POLE
SD-4	11-07-19	LOOP DETECTOR INSTALLATION
SD-5	09-12-13	CONTROLLER CABINET UTILITY DRAWER
SD-6	**02-13-24**	HEAVY DUTY PULL BOX
SD-7	**02-13-24**	SPAN WIRE ASSEMBLY WOOD POLE
SD-8	12-08-16	SIGNAL HEAD PLACEMENT
SD-9	11-07-19	SERVICE POINT
SD-10	11-16-17	WOOD POLE SPAN WIRE INSTALLATION
SD-11	**02-13-24**	STEEL POLE WITH MAST ARM
SD-12	11-07-19	SERVICE POINT INSTALLATION WITH SUPPLEMENTAL GROUNDING ARRAY
SD-13	11-16-17	FLASHING BEACON INSTALLATION FOR HAZARDOUS CONDITIONS
SD-14	11-16-17	FLASHING BEACON INSTALLATION FOR HAZARDOUS CONDITIONS AND SCHOOL ZONES
SD-15	11-16-17	SOLAR POWERED FLASHING BEACON INSTALLATION FOR SCHOOL ZONE SIGNING
SD-16	09-12-13	OVERHEAD SIGN DETAILS (OVERHEAD SIGN MOUNTED ON STEEL POLE WITH MAST ARM)
SE-1	11-07-19	TABLES AND METHOD OF SUPERELEVATION FOR ONE-WAY TRAFFIC
SE-2	11-07-19	TABLES AND METHOD OF SUPERELEVATION FOR TWO-WAY TRAFFIC
SE-3	11-07-19	TABLES AND METHOD OF SUPERELEVATION FOR TWO-WAY TRAFFIC (4% MAXIMUM)
SES-1	10-18-96	SAFETY END SECTION FOR CIRCULAR AND ARCH PIPES
SHS-1	09-12-13	STANDARD HIGHWAY SIGNS AND SUPPORT ASSEMBLIES
SHS-2	07-25-19	U-CHANNEL POST ASSEMBLIES
SHS-3	05-19-22	DETAIL OF BREAKAWAY SIGN SUPPORTS FOR GUIDE SIGNS
SHS-4	09-12-13	DETAIL OF BREAKAWAY SIGN SUPPORTS FOR STANDARD SIGNS
SHS-5	09-12-13	DETAILS OF GUIDE SIGN PANELS
SHS-6	09-12-13	MOUNTING DETAILS FOR DEMOUNTABLE LEGEND ON GUIDE SIGNS
SHS-7	09-12-13	DETAIL OF OMNI-DIRECTIONAL BREAKAWAY SIGN SUPPORTS
SHS-8	11-16-17	TYPICAL DELINEATOR PLACEMENT ALONG THE INTERSTATE SYSTEM
SI-1	10-25-18	DETAILS OF SPECIAL ITEMS
SI-2	05-14-20	REINFORCED CONCRETE RETAINING WALL (WITHOUT LIVE LOAD SURCHARGE)
SI-3	11-05-20	CONCRETE WALK (TYPE SPECIAL)
TC-1	11-07-19	STANDARD TRAFFIC CONTROLS FOR HIGHWAY CONSTRUCTION
TC-2	05-20-21	STANDARD TRAFFIC CONTROLS FOR HIGHWAY CONSTRUCTION
TC-3	08-12-21	STANDARD TRAFFIC CONTROLS FOR HIGHWAY CONSTRUCTION
TC-4	11-07-19	STANDARD TRAFFIC CONTROLS FOR HIGHWAY CONSTRUCTION - TEMPORARY PRECAST BARRIER
TC-5	11-07-19	STANDARD TRAFFIC CONTROLS FOR HIGHWAY CONSTRUCTION - TEMPORARY PRECAST BARRIER
TEC-1	11-16-17	TEMPORARY EROSION CONTROL DEVICES
TEC-2	06-02-94	TEMPORARY EROSION CONTROL DEVICES
TEC-3	11-03-94	TEMPORARY EROSION CONTROL DEVICES
TEC-4	07-26-12	TEMPORARY EROSION CONTROL DEVICES
TR-1	01-12-00	DETAILS OF STANDARD TURNOUT FOR ENTRANCE & EXIT RAMPS
TR-1A	08-22-02	DETAILS OF STANDARD TURNOUT FOR ENTRANCE & EXIT RAMPS (NON-REINFORCED)
WF-1	08-22-02	WIRE FENCE TYPE A AND B
WF-2	04-20-79	WIRE FENCE WATER GAPS
WF-3	11-17-10	CHAIN LINK FENCE
WF-4	08-22-02	WIRE FENCE TYPE C AND D
WR-1	11-10-05	WHEELCHAIR RAMPS NEW CONSTRUCTION AND ALTERATIONS
WR-2	10-09-03	WHEELCHAIR RAMPS ALTERATIONS ONLY

REFER TO TABULATION OF QUANTITIES FOR "W" & "B" DIMENSIONS

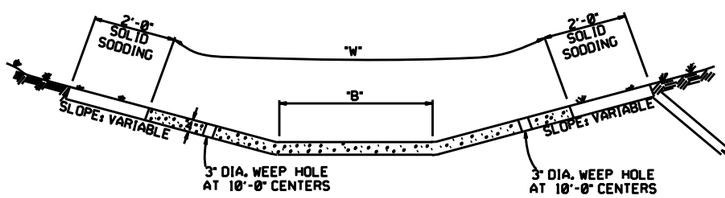

TYPE A

EXCAVATE TO NEAT LINES TO CONSTRUCT DITCH PAVING AND SOLID SODDING.

REFER TO TABULATION OF QUANTITIES FOR "W" DIMENSIONS

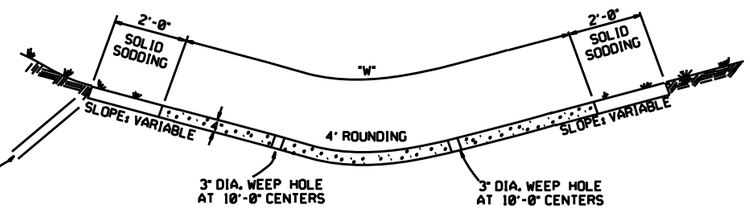

TYPE B

THE STEEL AND ADDITIONAL CONCRETE FOR THE WALLS SHALL NOT BE PAID FOR DIRECTLY, BUT SHALL BE CONSIDERED TO BE INCLUDED IN THE PRICE BID FOR "CONCRETE DITCH PAVING."

TOE WALL DEPTH MAY BE ALTERED TO 1'-0" WHEN DIRECTED BY THE ENGINEER IN ROCK EXCAVATION

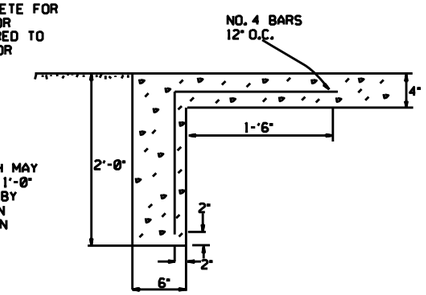

TOE WALL DETAIL FOR CONCRETE DITCH PAVING

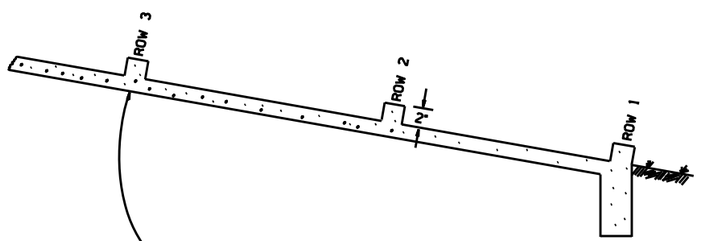

NUMBER OF ELEMENTS PER ROW VARIES WITH WIDTH OF PAVING SPECIFIED

ENERGY DISSIPATORS TO BE USED FOR THE ENTIRE LENGTH OF DITCH WHEN SLOPE OF DITCH PAVING EXCEEDS 7%. THE DISSIPATORS WILL NOT BE PAID FOR DIRECTLY, BUT SHALL BE CONSIDERED TO BE INCLUDED IN THE PRICE BID FOR CONCRETE DITCH PAVING.

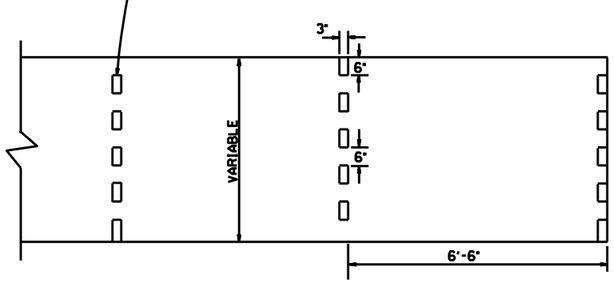

ENERGY DISSIPATORS
(NO SCALE)

GENERAL NOTES:

THE FULL WIDTH OF EACH SECTION SHALL BE POURED MONOLITHICALLY.

TOE WALLS TO BE CONSTRUCTED FULL WIDTH AT EACH END OF DITCH PAVING, AND POURED MONOLITHICALLY.

SOLID SOD ALONG DITCH PAVING TO BE PLACED WITHIN 14 DAYS OF DITCH PAVING CONSTRUCTION.

1" WIDE TRANSVERSE EXPANSION JOINTS SHALL BE PLACED IN CONCRETE DITCH PAVING AT 45' INTERVALS. THE SPACE SHALL BE FILLED WITH APPROVED JOINT FILLER COMPLYING WITH AASHTO M213.

DATE	REVISION	DATE FILMED
12-8-16	CORRECTED ENERGY DISSIPATOR DRAWING AND NOTE	
11-17-10	ADDED GENERAL NOTE	
6-2-94	ADDED GENERAL NOTE ABOUT SOLID SODDING	
11-30-8	ELIMINATED MIN. ROWS OF ELEMENTS	111-30-89
7-15-88	REVISED DISSIPATOR NOTE	653-7-15-88
4-3-87	REVISED ENERGY DISSIPATOR	671-4-3-87
1-9-87	MODIFIED NOTE ON ENERGY DISS.	532-1-9-87
11-3-86	ADDED NOTE TO ENERGY DISS.	599-12-1-86
11-1-84	ENERGY DISSIPATOR DETAILS ADDED	508-11-1-84
11-1-84	EXCAVATION DETAILS ADDED TYPED A & B	
10-2-72	REVISED AND REDRAWN	508-10-2-72

ARKANSAS STATE HIGHWAY COMMISSION

CONCRETE DITCH PAVING

STANDARD DRAWING CDP-1

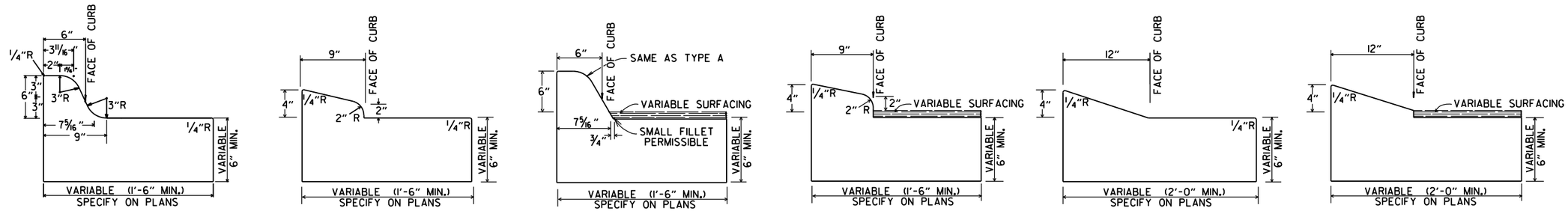

CONCRETE COMBINATION CURB AND GUTTER

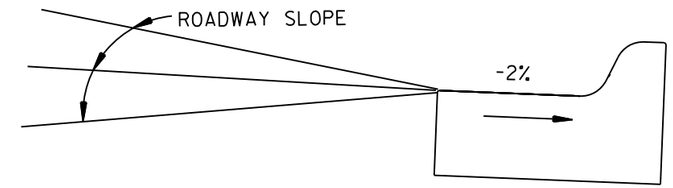

DETAIL OF GUTTER SLOPE

GUTTER SHALL BE CONSTRUCTED ON 2% SLOPE AWAY FROM ROADWAY, REGARDLESS OF ROADWAY SLOPE.

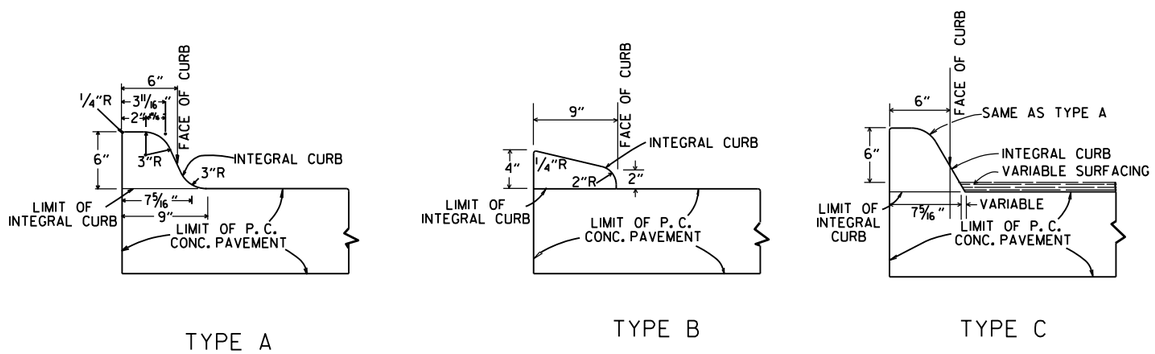

INTEGRAL CURB

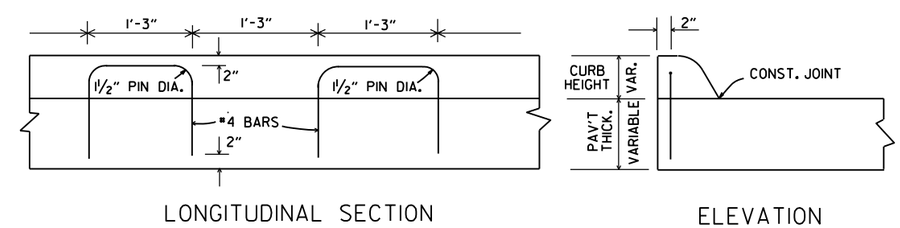

ALTERNATE CONSTRUCTION METHOD FOR INTEGRAL CURB

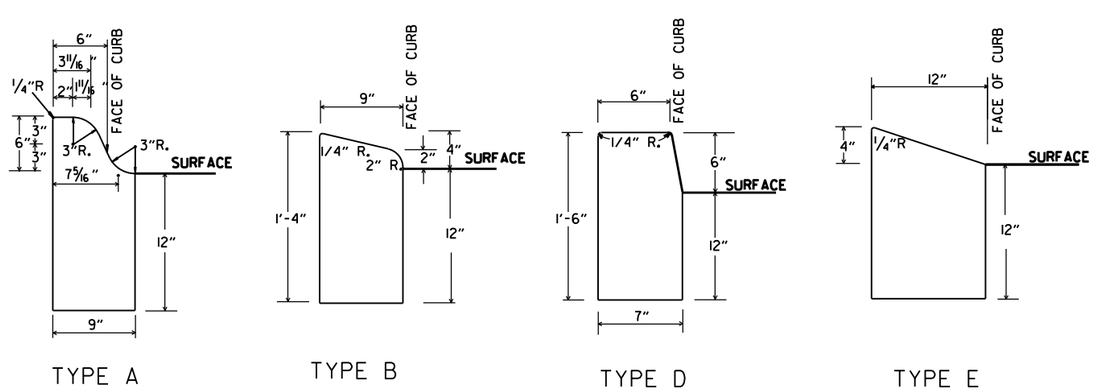

CONCRETE CURB

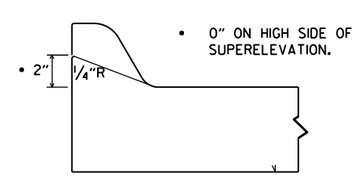

NOTE: USE MODIFIED CURB AS SPECIFIED ON STD. DR-1. COMPENSATION FOR MODIFIED CURB WILL BE CONSIDERED INCLUDED IN THE PRICE BID FOR THE TYPE OF CURB OR CURB AND GUTTER SPECIFIED.

DETAILS OF MODIFIED CURB

DATE	REVISION	DATE FILMED
11-29-07	REVISED GUTTER SLOPE & MODIFIED CURB DETAILS	
11-10-05	ADDED DETAILS OF TYPE E CURBS	
11-16-01	REVISED CONCRETE CURB TYPE B	
11-18-98	REVISED MODIFIED CURB	
6-2-94	ADDED NOTE TO SPECIAL MODIFIED CURB	
8-5-93	CORRECTED GUTTER SLOPE	8-5-93
10-1-92	ADDED DETAILS OF GUTTER SLOPE	10-1-92
5-24-90	ADDED DETAILS OF MODIFIED CURB	5-24-90
11-30-89	VARIBLE DEPTH TYPE A & B I	11-30-89
7-15-88	REVISED MODIFIED CURB	630-7-15-88
11-1-73	REVISED MODIFIED CURB	500-11-1-73
10-2-72	REVISED AND REDRAWN	512-10-2-72

ARKANSAS STATE HIGHWAY COMMISSION

CURBING DETAILS

STANDARD DRAWING CG-1

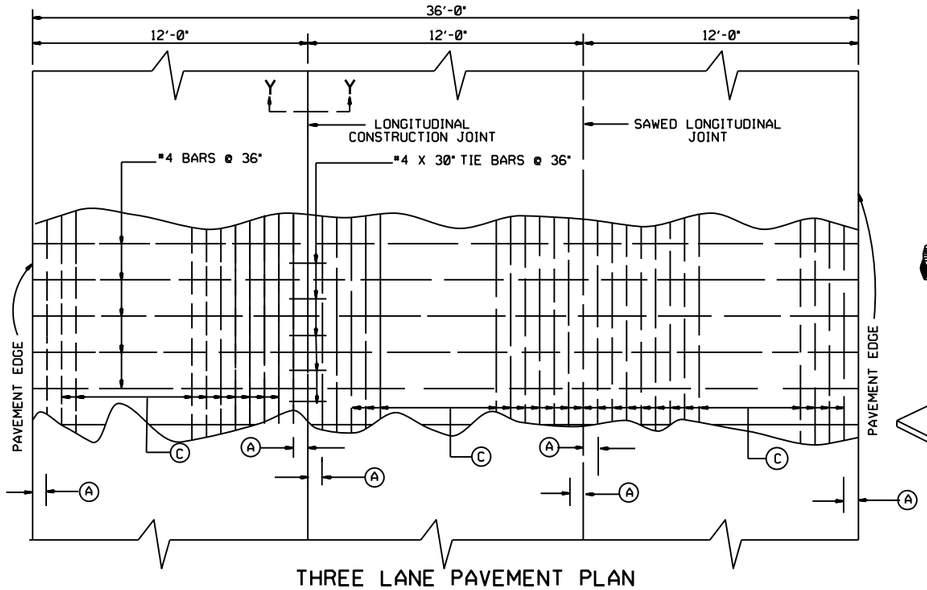

THREE LANE PAVEMENT PLAN

(12 FT. AND 24 FT. PLACEMENT) •

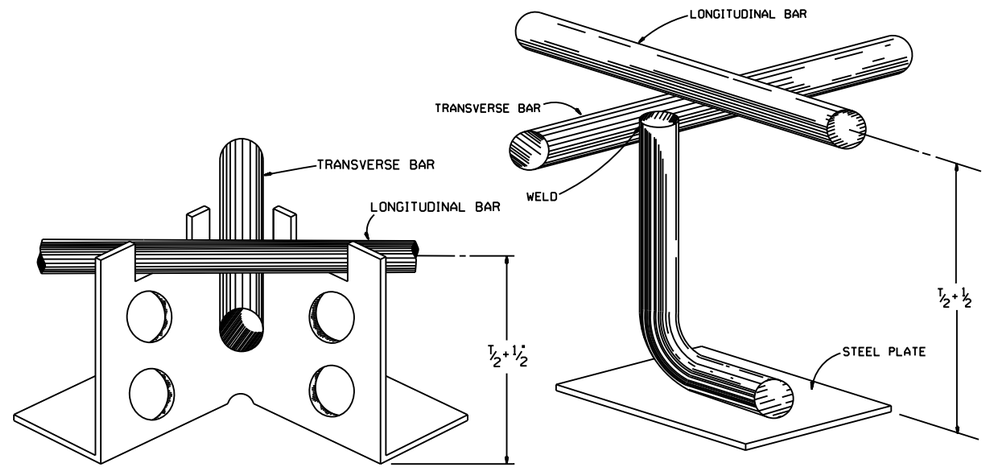

SUGGESTED CHAIR DETAILS

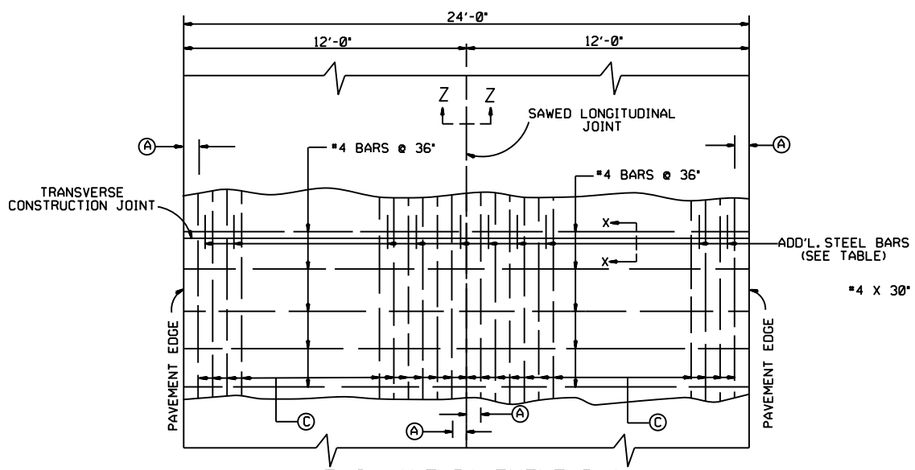

TWO LANE PAVEMENT PLAN

(24 FT. PLACEMENT) •

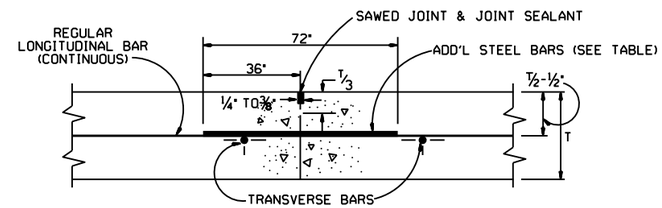

TRANSVERSE CONSTRUCTION JOINT

SECTION X-X

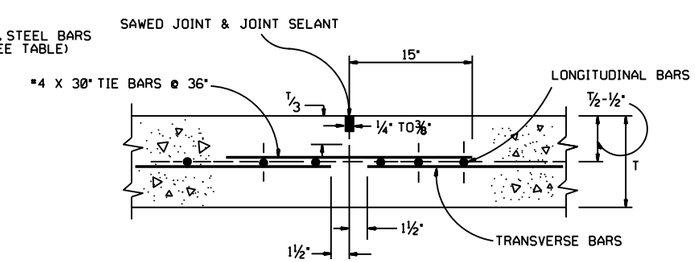

LONGITUDINAL CONSTRUCTION JOINT

SECTION Y-Y

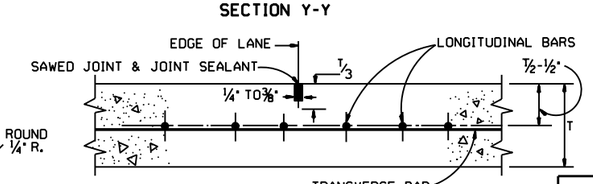

SAWED LONGITUDINAL JOINT

SECTION Z-Z

JOINT DETAILS

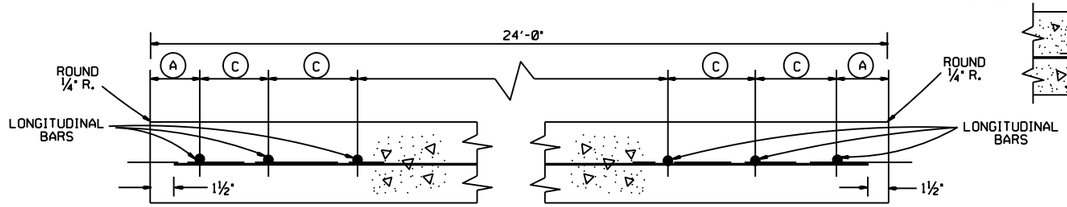

TYPICAL SECTION

(24 FT. PLACEMENT) •

• LANE WIDTHS ARE FOR ILLUSTRATIVE PURPOSES ONLY AND SHOULD NOT BE USED IF IN CONFLICT WITH TYPICAL CROSS SECTIONS SHOWN ELSEWHERE IN THE PLANS.

NOTE: FOR DIMENSIONS A & C SEE TABLE ON RT.

• GENERAL NOTES •

SAWED JOINT AND JOINT SEALANT FOR TRANSVERSE CONSTRUCTION JOINT, LONGITUDINAL CONSTRUCTION JOINT AND SAWED LONGITUDINAL JOINT SHALL CONFORM TO THE DETAILS SHOWN FOR SAWED LONGITUDINAL JOINT ON STANDARD DRAWING CPTJ-6A.

NO EXPANSION JOINTS WILL BE USED EXCEPT AT STRUCTURE ENDS OR FIXED OBJECTS AS SHOWN ELSEWHERE IN THE PLANS.

FOR FURTHER INFORMATION REGARDING THE PLACEMENT OF CONCRETE AND REINFORCEMENT REFER TO THE GOVERNING SPECIFICATIONS FOR "CONTINUOUSLY REINFORCED CONCRETE PAVEMENT."

FOR DETAILS OF PAVEMENT WIDTH, PAVEMENT THICKNESS AND THE CROWN CROSS-SLOPE REFER TO TYPICAL SECTIONS.

WITHIN ANY AREA BOUNDED BY TWO FEET PAVEMENT LENGTH, MEASURED PARALLEL TO THE CENTERLINE; AND TWELVE FEET OF PAVEMENT WIDTH, MEASURED PERPENDICULAR TO THE PAVEMENT CENTERLINE, NOT OVER 33% OF THE REGULAR LONGITUDINAL STEEL SHALL BE SPLICED.

MNINMUM SPLICE REQUIREMENT: 25 TIMES THE NOMINAL DIAMETER OF THE BAR OR 16 INCHES WHICHEVER IS LONGER.

AT TRANSVERSE CONSTRUCTION JOINTS THE REGULAR LONGITUDINAL BARS SHALL EXTEND EITHER SIDE OF THE JOINT SUCH THAT THE BAR SPLICES FOR THE REGULAR LONGITUDINAL BARS SHALL BE A MINIMUM OF FOUR FEET FROM THE CONSTRUCTION JOINT. AT LONGITUDINAL CONSTRUCTION JOINT, IF THE CONTRACTOR ELECTS TO CONTINUE THE REGULAR TRANSVERSE STEEL THROUGH THE JOINTS, THE #4 TIE BARS SHOWN HEREON MAY BE DELETED.

CHAIR DETAILS SHOWN HEREON ARE EXAMPLES ONLY; OTHER APPROVED TYPES WHICH WILL SATISFY THE REQUIREMENTS NOTED HEREIN, WILL BE PERMITTED. CHAIR SPACINGS SHALL NOT BE GREATER THAN 36" C-C (LONGITUDINAL) AND 48" C-C (TRANSVERSE). ADDITIONAL CHAIRS SHALL BE USED IF NECESSARY TO MEET PLACEMENT REQUIREMENTS.

AT ALL LAP SPLICES OCCURRING WITHIN 8 FEET BEYOND THE CONSTRUCTION JOINTS, IN THE DIRECTION OF PAVING AND 4 FEET BACK OF THE CONSTRUCTION JOINTS, THE LENGTH OF LAP SHALL BE DOUBLE THAT NORMALLY SPECIFIED OR EACH SPLICE SHALL BE STRENGTHENED BY SPLICING IN, SYMMETRICALLY WITH THE LAP, A 6 FOOT LENGTH OF DEFORMED BAR OF THE SAME NOMINAL SIZE AS THE LONGITUDINAL REINFORCEMENT.

TABLE OF EQUIVALENT LONGITUDINAL REINFORCEMENT

PAVEM'T. THICKNESS	BAR SIZE	24'-0" PLACEMENT WIDTH				12'-0" PLACEMENT WIDTH				ADD'L STEEL @ TRANS. CONSTR. JOINT			
		SPACING (C-C)		BARS PER PLACE--MENT	STEEL ①	SPACING (C-C)		BARS PER PLACE--MENT	STEEL ①	SIZE	AVG. SPACING	② NO. PER LANE	WEIGHT
		A	C		LBS./ SQ. YD.	A	C		LBS./ SQ. YD.				LBS. PER FOOT
INCHES		INCHES				INCHES					INCHES		
6	#5	5½	7	40	18.28	5½	7	20	18.26	⅝" X 72"	14	10	5.22
8	#6	4½	7½	38	24.55	4½	7½	19	24.41	¾" X 72"	15	10	7.51
9	#6	3¾	6½	44	27.98	3¾	6½	22	27.95	¾" X 72"	13	11	8.26
10	#7	4	8½	34	29.53	4	8½	17	29.51	⅞" X 72"	17	8	8.18
11	#7	4½	7½	38	32.78	4½	7½	19	32.75	⅞" X 72"	15	10	10.22
12	#7	5½	7	40	34.39	5½	7	20	34.37	⅞" X 72"	14	10	10.22

NOTE: WHERE THE PROPOSED PLACEMENT WIDTHS VARY FROM THE BASIC DESIGN WIDTH SHOWN, THE SPACING "A" AND THE ADJACENT SPACING "C" SHALL BE ADJUSTED TO ACCOMODATE A REINFORCEMENT ARRANGEMENT EQUAL TO OR SLIGHTLY HEAVIER THAN THAT SHOWN AS DIRECTED BY THE ENGINEER.

① INCLUDES BOTH REGULAR LONGITUDINAL AND TRANSVERSE BARS. BASED UPON 1 FOOT PAVEMENT FOR THE WIDTH INDICATED. ALL TRANSVERSE STEEL IS #4 BARS AT 36" CENTERS. FOR ESTIMATING PURPOSES IT IS ASSUMED THAT LONGITUDINAL BARS ARE SPLICED AT 32' INTERVALS.

② THIS SHALL BE THE MINIMUM NUMBER OF ADDITIONAL STEEL BARS TO BE PLACED PER LANE. THE SPACING OF THE ADDITIONAL STEEL BARS SHALL BE VARIED AS DIRECTED IN ORDER TO PROVIDE A MINIMUM CLEARANCE OF 2½" FROM EACH REGULAR LONGITUDINAL REINFORCING BAR.

DATE	REVISION	DATE FILMED
10-18-96	CORRECTED SPELLING	
10-1-92	REVISED REINFORCING	
8-15-91	REV. A SPACING FOR 24' PAV'T.	
3-23-89	ALTERED SAWED JOINT & ADDED GEN. NOTES	
11-3-86	DIMEN'S. OF LONG. JTS.	
1-4-83	DEPTH OF SAWED TRANSVERSE	
	CONST. JOINT	
9-15-78	53 TO 52 #4 BARS (24' PL.)	
10-2-72	REVISED AND REDRAWN	

ARKANSAS STATE HIGHWAY COMMISSION

CONCRETE PAVEMENT DETAILS CONTINUOUSLY REINFORCED

STANDARD DRAWING CPCR-1

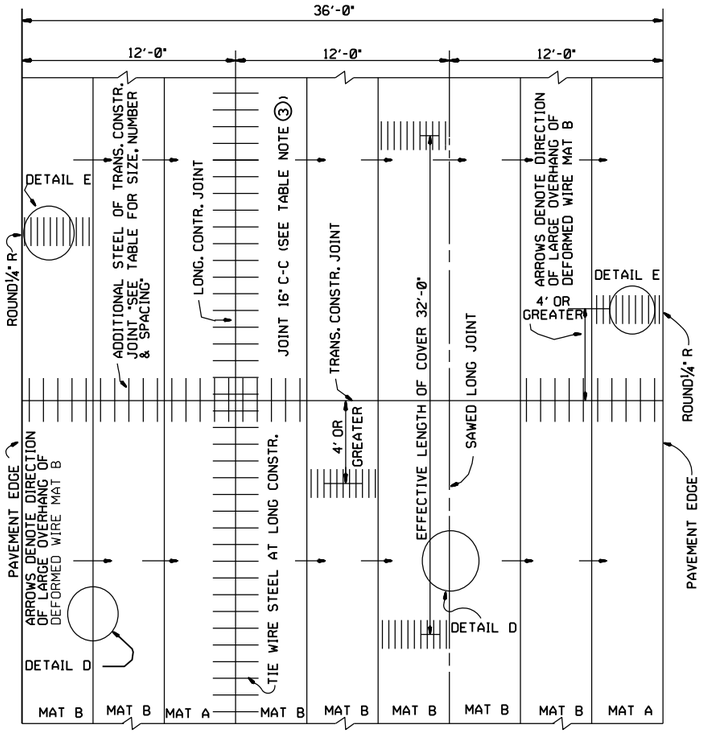

THREE LANE PAVEMENT PLAN

(12' AND 24' PLACEMENT)

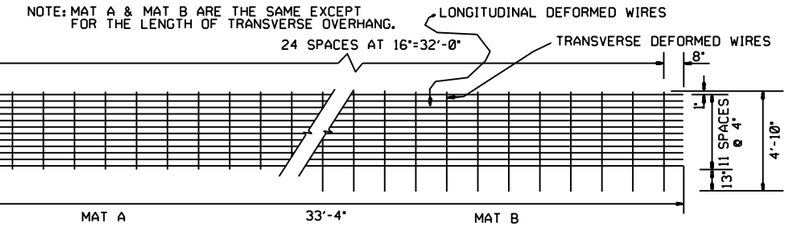

PREFABRICATED DEFORMED WIRE MATS

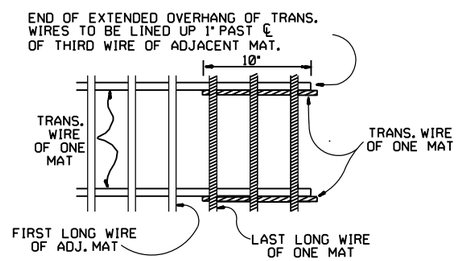

DETAIL D

TYPICAL LAP OF TRANSVERSE WIRES

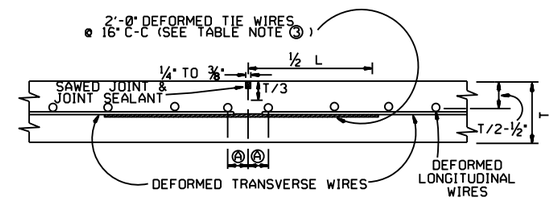

LONGITUDINAL CONSTRUCTION JOINT

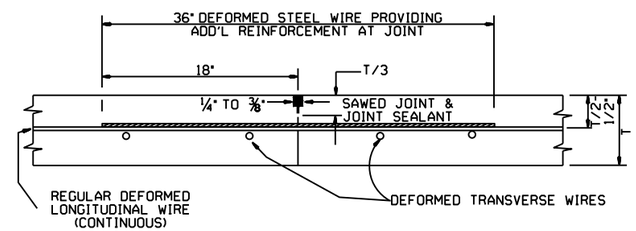

TRANSVERSE CONSTRUCTION JOINT

GENERAL NOTES

NO EXPANSION JOINTS WILL BE USED EXCEPT AT STRUCTURAL ENDS OR FIXED OBJECTS AS SHOWN ELSEWHERE IN THE PLANS.

JOINT AND JOINT SEAL DETAILS SHALL BE AS SHOWN ELSEWHERE IN THE PLANS.

CONSTRUCTION JOINTS MAY BE FORMED BY THE USE OF METAL OR WOOD FORMS EQUAL IN DEPTH TO THE NOMINAL DEPTH OF THE PAVEMENT, OR BY THE OTHER MEANS WHICH HAVE BEEN APPROVED BY THE ENGINEER PRIOR TO THEIR USE.

REFER TO TYPICAL SECTION FOR PAVEMENT WIDTH, THICKNESS AND CROWN.

IT IS THE INTENT OF THIS DESIGN THAT THE LONGITUDINAL STEEL BE AT THE CENTER OF THE SLAB. IT SHALL BE THE RESPONSIBILITY OF THE CONTRACTOR TO TAKE ALL NECESSARY PRECAUTIONS TO INSURE THAT THE FINAL POSITION OF THE STEEL IS NOT BELOW THE CENTER OF THE SLAB.

WITHIN ANY AREA BOUNDED BY TWO FEET OF PAVEMENT LENGTH MEASURED PARALLEL TO THE CENTERLINE, AND TWELVE FEET OF PAVEMENT WIDTH MEASURED PERPENDICULAR TO THE PAVEMENT CENTERLINE, NOT OVER 33% OF THE REGULAR LONGITUDINAL STEEL SHALL BE SPLICED.

ALL SPLICES SHALL BE A MINIMUM OF 16" FOR LONGITUDINAL STEEL AND 10" FOR TRANSVERSE STEEL.

AT TRANSVERSE CONSTRUCTION JOINTS THE REGULAR LONGITUDINAL STEEL SHALL EXTEND A MINIMUM OF FOUR FEET ON EITHER SIDE OF THE JOINT.

IF WIDTHS GREATER THAN TYPICAL WIDTHS OCCUR, INDIVIDUAL WIRES MAY BE ADDED TO OBTAIN ADDITIONAL WIDTH, PROVIDED THE C-C SPACING IS NOT EXCEEDED AND LAP REQUIREMENTS ARE MET.

AT ALL LAP SPLICES OCCURRING WITHIN EIGHT FEET BEYOND THE CONSTRUCTION JOINT, IN THE DIRECTION OF PAVING AND FOUR FEET BACK OF THE CONSTRUCTION JOINT, THE LENGTH OF LAP SHALL BE DOUBLE THAT NORMALLY SPECIFIED OR EACH SPLICE SHALL BE STRENGTHENED BY SPLICING IN, SYMMETRICALLY WITH THE LAP, A SIX-FOOT LENGTH OF DEFORMED BAR OF THE SAME NOMINAL SIZE AS THE LONGITUDINAL REINFORCEMENT.

SAWED JOINT AND JOINT SEALANT FOR TRANSVERSE CONSRTUCTION JOINT, LONGITUDINAL CONSTRUCTION JOINT AND SAWED LONGITUDINAL JOINT SHALL CONFORM TO THE DETAILS SHOWN FOR SAWED LONGITUDINAL JOINT ON STANDARD DRAWING CPTJ-6A.

PAVEMENT THICKNESS (T) IN.	LONGITUDINAL REINFORCEMENT											TRANS. REINF. FOR LONG. CONSTR. JOINT	
	WIRE SIZE	24' PLACEMENT			12' PLACEMENT			ADDITIONAL STEEL TRANS. CONSTR. JOINT				WIRE SIZE	TIE WIRES ③
		SPACING C-C		① STEEL LB/SY	SPACING C-C		① STEEL LB/SY	WIRE SIZE	LENGTH IN.	② NO. PER LANE	WEIGHT LB./FT OF WIDTH		WEIGHT LB./FT. OF LENGTH
		Ⓐ IN.	Ⓒ IN.		Ⓐ IN.	Ⓒ IN.							
8	D-19.2	2	4	20.59	2	4	20.51	D-19.2	36	16	2.61	D-8	.408
6	D-14.4	2	4	14.90	2	4	14.86	D-14.4	36	16	1.96	D-4	.204

TABLE NOTE

① INCLUDES BOTH LONGITUDINAL AND TRANSVERSE WIRES BASED ON THE WIDTH INDICATED AND AN EFFECTIVE COVER LENGTH OF 32 FEET. (ESTIMATING QUANTITIES INCLUDE SPLICES)

② THIS SHALL BE THE MINIMUM NUMBER OF ADDITIONAL STEEL WIRES TO BE PLACED PER LANE. THE ADDITIONAL STEEL WIRES SHALL BE PLACED EQUIDISTANT BETWEEN TWO REGULAR LONGITUDINAL REINFORCING WIRES AT AS NEAR A UNIFORM SPACING ACROSS THE LANE AS POSSIBLE.

③ AT THE OPTION OF THE CONTRACTOR, #4 BARS X 30 IN. AT 30 IN. C-C MAY BE USED IN LIEU OF THE DEFORMED TIE WIRES AT 16 IN. C-C SHOWN, PROVIDED WRITTEN APPROVAL HAS BEEN RECEIVED FROM THE ENGINEER.

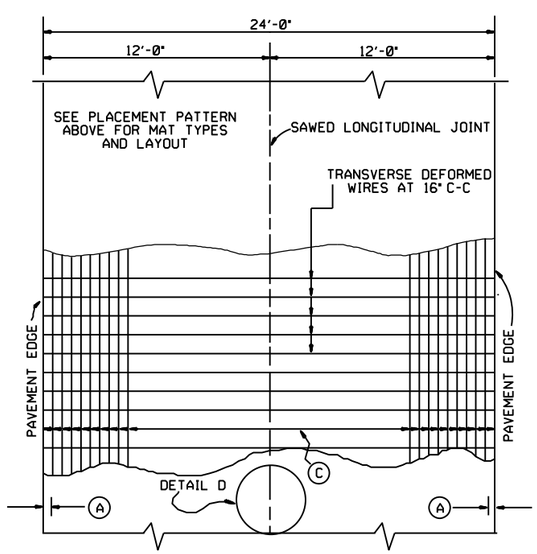

TWO LANE PAVEMENT PLAN

(24' PLACEMENT)

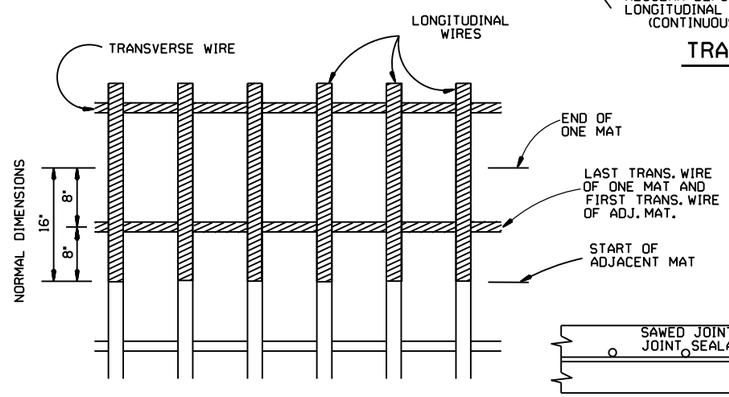

PLAN

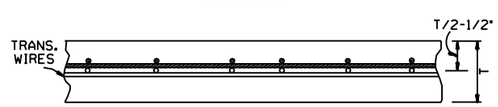

SECTION

DETAIL E

TYPICAL LAP OF LONGITUDINAL WIRES

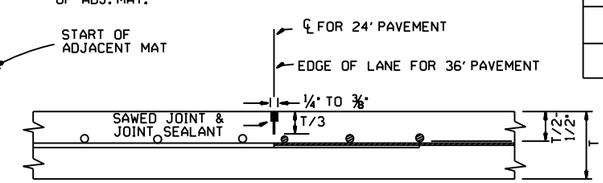

SAWED LONGITUDINAL JOINT

DATE	REVISION	DATE FILMED
3-23-89	ALTERED SAWED JOINT & ADDED NOTE	509-3-23-89
11-3-86	DIMEN'S. OF LONG. JTS.	651-11-3-86
1-4-83	DEPTH OF SAWED TRANSVERSE CONST. JOINT	676-1-4-83
10-2-72	REVISED AND REDRAWN	505-10-2-72

ARKANSAS HIGHWAY COMMISSION

CONCRETE PAVEMENT DETAILS
CONTINUOUSLY REINFORCED
DEFORMED WIRE MAT

STANDARD DRAWING CPCR-2

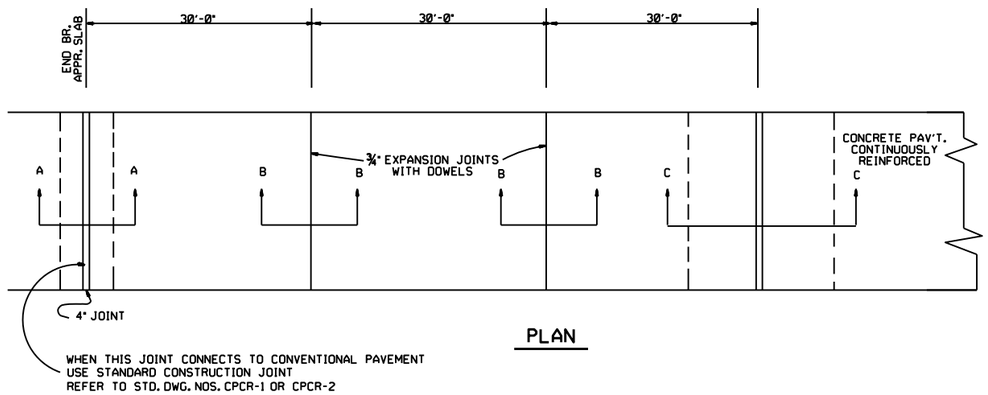

PLAN

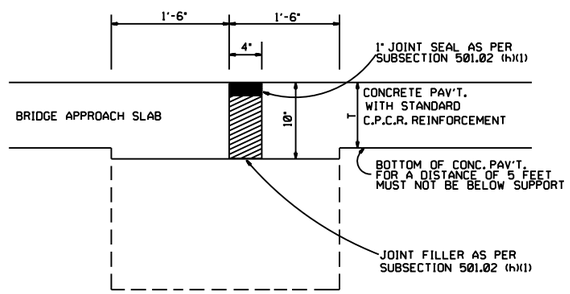

SECTION A-A

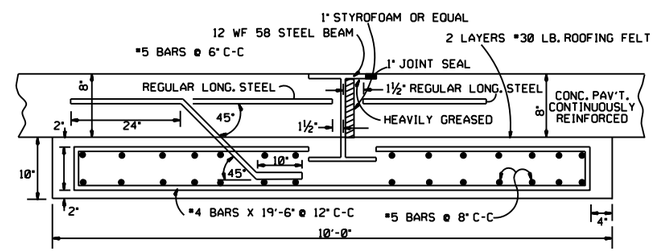

SECTION C-C

DETAIL OF WIDE FLANGE BEAM & JOINT SUPPORT

NOTE: WELD 12" X 10" X½" STEEL PLATE TO ENDS OF BEAM AFTER PLACEMENT OF CONCRETE PAVEMENT.

GENERAL NOTES

OTHER TYPES OF EXPANSION JOINTS MAY BE CONSTRUCTED AT THE OPTION OF THE CONTRACTOR AFTER APPROVAL BY THE ENGINEER.

LOAD TRANSMISSION UNITS AND DOWELS SHALL BE SECURED PARALLEL TO THE PAVEMENT SURFACE AND CENTERLINE.

ALL EXPANSION JOINTS, INCLUDING ALL MATERIALS, DEVICES, AND WORK REQUIRED SHALL BE CONSIDERED AS SUBSIDIARY WORK AND SHALL BE INCLUDED IN THE UNIT PRICE BID FOR PORTLAND CEMENT CONCRETE PAVEMENT. NO DIRECT PAYMENT WILL BE MADE FOR ANY MATERIAL, BAR CHAIR, STEEL OR ANY OTHER DEVICE SHOWN NOR FOR ITS INSTALLATION.

"T" DENOTES THICKNESS OF SLAB.

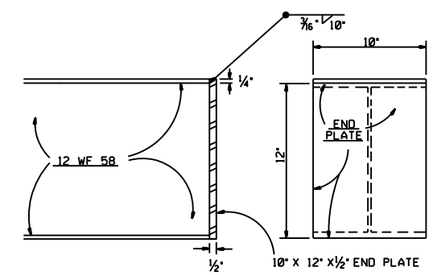

DETAIL OF END PLATE ATTACHMENT TO WIDE FLANGE BEAM

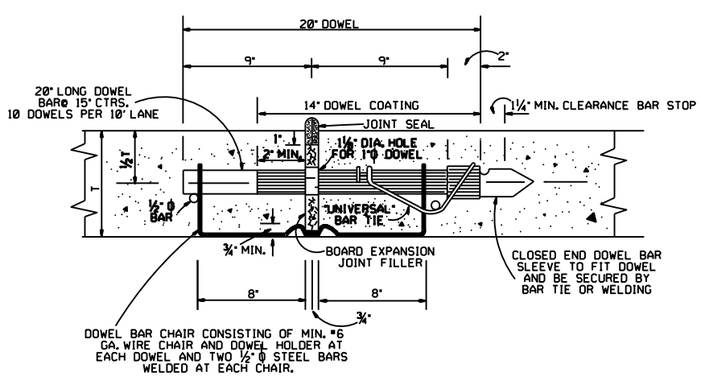

SECTION B-B
DETAIL OF EXPANSION JOINT

STRUCTURAL EXCAVATION	CLASS A CONCRETE	REINFORCING STEEL	STRUCTURAL STEEL
CU. YD.		LB.	
0.31	0.31	46.2	58.0

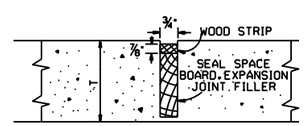

SEAL SPACE FOR EXPANSION JOINT

NOTE: BOARD JOINT FILLER OF SPECIFIED TYPE SHALL BE SECURED ON SUBGRADE IN EXACT POSITION AND LINE AS ILLUSTRATED OR BY OTHER APPROVED DEVICE.
JOINT ASSEMBLY SHALL BE SECURELY FASTENED INTO PLACE PRIOR TO PLACING CONCRETE.
AFTER SECOND PASSAGE OF FINISHING MACHINE REMOVE CONCRETE TO 1" BELOW TOP OF BOARD AND NAIL ¾" X ⅞" WOOD STRIP TO TOP OF BOARD FILLER TO FORM JOINT SEAL SPACE.
REPLACE CONCRETE AND FINISH WITH LONGITUDINAL FLOAT.
THE WOOD STRIP SHALL NOT BE REMOVED UNTIL IMMEDIATELY PRIOR TO POURING JOINT SEAL.

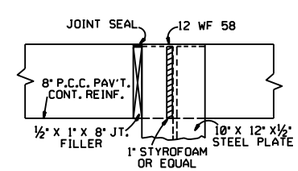

ELEVATION

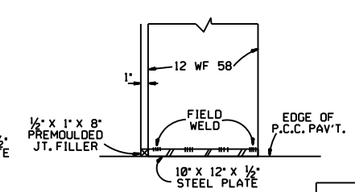

PLAN

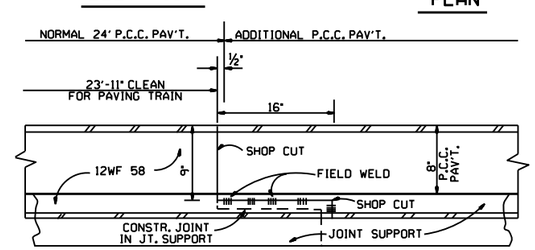

TRANSVERSE SECTION THROUGH WF BEAM AND JOINT SUPPORT

DATE	REVISION	DATE FILM'D
10-18-96	CORRECTED SUBSECTION AND SPELLING	
4-26-96	DELETE DOWEL BAR NOTE	
7-15-88	SUB-SECT. 501.03 (f)(1) TO 501.03 (h)(1)	
8-22-75	REVISED 4" EXP. JOINT MAT'L	
11-1-73	REVISED JOINT SEAL A-A	
10-2-72	REVISED AND REDRAWN	

ARKANSAS STATE HIGHWAY COMMISSION

DETAILS OF TERMINAL JOINTS FOR CONCRETE PAVEMENT

CONTINUOUSLY REINFORCED

STANDARD DRAWING CPCR-3

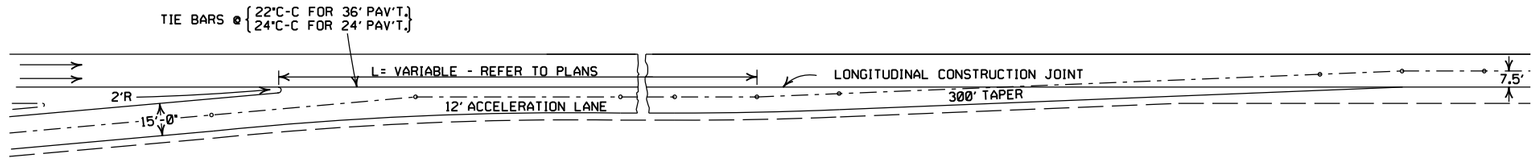

RETURN CURVES

Δ =2°17'30"
D = 3°00'
T =38.2'
L =76.4'

ENTRANCE RAMP

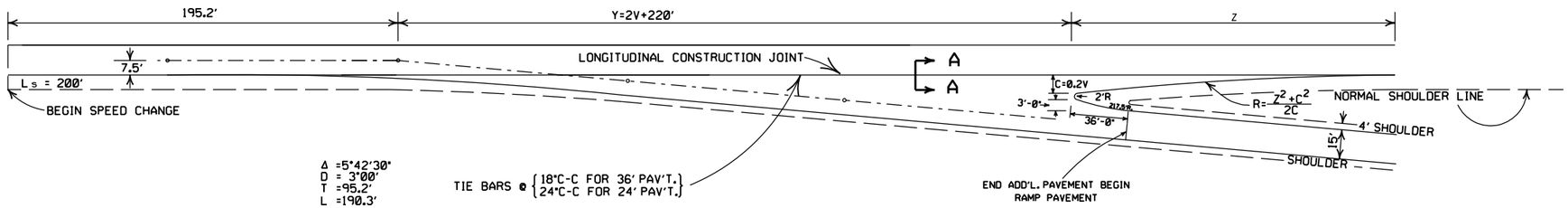

EXIT RAMP

DESIGN SPEED V	Y	NOSE OFFSET C	LENGTH NOSE TAPER Z	RETURN RADIUS R	ADD'L. SURFACING SQ. YDS.
40	300.0	8.0	96.0	580.0	602.43
50	320.0	10.0	120.0	725.0	687.29
60	340.0	12.0	168.0	1182.0	790.55
70	360.0	14.0	210.0	1582.0	902.27

NOTE: ON GRADES IN EXCESS OF 4%, THE LENGTHS "Y" & "L" MAY BE VARIED TO FIT THE CASE IN THE RATION OF $\frac{1 \pm \%GRADE}{2}$ (LENGTH AS SHOWN).

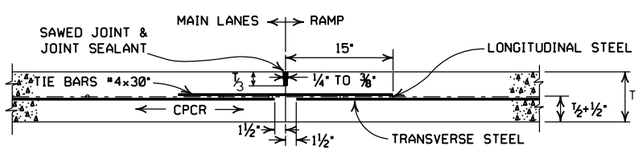

LONGITUDINAL CONSTRUCTION JOINT

SECTION A - A

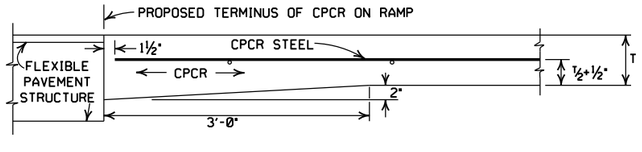

DETAIL FOR JUNCTION WITH FLEXIBLE TYPE PAVEMENT STRUCTURE

GENERAL NOTES

THE SEQUENCE OF OPERATION ON PLACING THE RAMP SHALL BE AS DIRECTED BY THE ENGINEER. THE LONGITUDINAL STEEL SHALL BE PLACED IN A DIRECTION APPROXIMATELY PARALLEL TO THE DIRECTION OF THE RAMP.

SAWED JOINT AND JOINT SEALANT FOR LONGITUDINAL CONSTRUCTION JOINT SHALL CONFORM TO THE DETAILS SHOWN FOR SAWED LONGITUDINAL JOINT ON STANDARD DRAWING CPTJ-6A.

DATE	REVISION	DATE FILMED
2-27-14	CORRECTED SPELLING	
3-23-89	ALTERED SAWED JOINT & ADDED NOTE	510-3-23-89
11-3-86	DIMEN'S. OF LONG. JTS.	652-11-1-86
10-2-72	REVISED AND REDRAWN	507-10-2-72

ARKANSAS STATE HIGHWAY COMMISSION

DETAILS OF ENTRANCE & EXIT RAMPS FOR CONCRETE PAVEMENT CONTINUOUSLY REINFORCED

STANDARD DRAWING CPCR-4

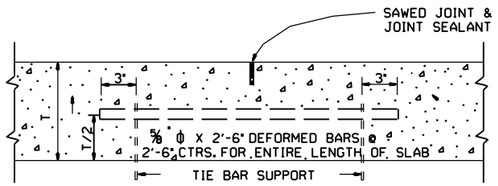

LONGITUDINAL JOINT

NOTE: THE TIE BAR SUPPORT SHOWN ABOVE MAY BE ELIMINATED IF OTHER APPROVED METHODS FOR PLACING AND SUPPORTING THE TIE BARS ARE PROVIDED.
TIE BARS SHALL BE 15" FROM TRANSVERSE JOINTS.

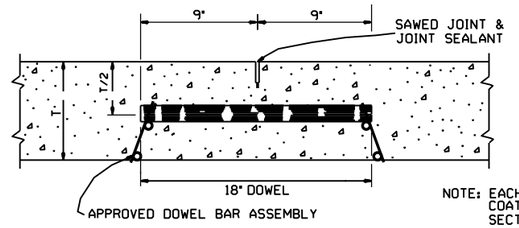

NOTE: EACH DOWEL TO BE COATED ACCORDING TO SECTION 502 OF THE STANDARD SPECIFICATIONS.

ROUND STEEL BAR DOWEL
1¼" DIA. WHEN T<10"
1½" DIA. WHEN T≥10"

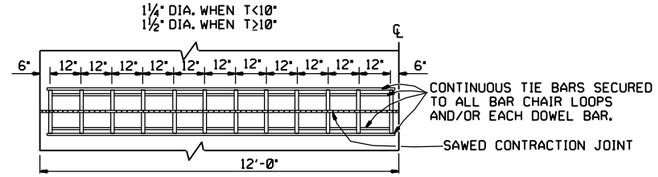

ONE-HALF 24' PAVEMENT
12 DOWELS
PLAN

NOTE: FOR 20' PAVEMENT USE 20 DOWELS @ 12" CTRS. WITH 6" SPACING FROM C.L. AND EDGE OF SLAB TO FIRST BAR.
FOR 15' PAVEMENT USE 15 DOWELS @ 12" CTRS. WITH 6" SPACING FROM C.L. AND EDGE OF SLAB TO FIRST BAR.
FOR 26' PAVEMENT USE 26 DOWELS @ 12" CTRS. WITH 6" SPACING FROM C.L. AND EDGE OF SLAB TO FIRST BAR.
FOR PAVEMENT WIDTHS OTHER THAN THOSE SHOWN ABOVE, USE DOWELS AT 12" CTRS. WITH 6" MAX. SPACING FROM C.L. TO FIRST BAR. DISTANCE FROM EDGE OF SLAB TO FIRST BAR SHALL BE ADJUSTED TO MAINTAIN 12" DOWEL BAR SPACING

CONTRACTION JOINT DETAILS

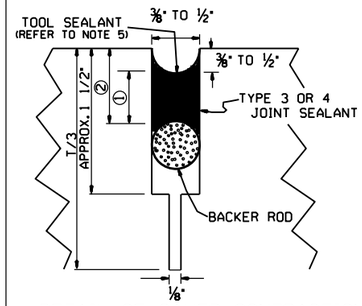

DETAIL OF SAWED CONTRACTION JOINT

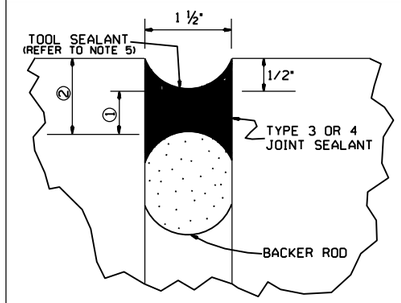

DETAIL OF EXPANSION JOINT

JOINT CONFIGURATION FOR TYPE 3 OR 4 JOINT SEALANT

JOINT WIDTH	SEALANT THICKNESS ①	BACKER ROD DIAMETER	BACKER ROD PLACEMENT DEPTH ②
INCHES			
¼	¼	⅜	½
⅜	¼	½	½
½	¼	⅝	½
⅝	5/16	¾	7/16
¾	⅜	⅞	⅞
1 ½	¾	2	1 ¼

JOINT CONFIGURATION FOR TYPE 5 JOINT SEALANT

JOINT WIDTH	SEALANT THICKNESS ①	BACKER ROD DIAMETER	BACKER ROD PLACEMENT DEPTH ②
INCHES			
¼	½	⅜	¾
⅜	¾	½	1

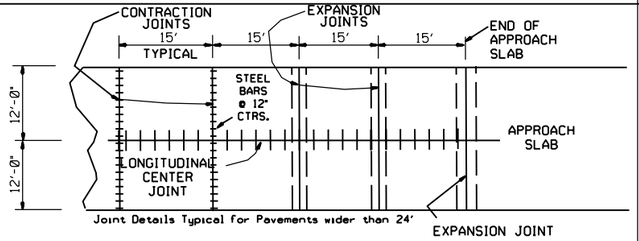

PLAN SHOWING EXPANSION JOINTS AT BRIDGE APPROACH SLABS

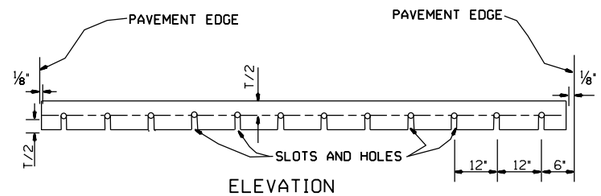

ELEVATION

NOTE: ALL DOWEL BARS SHALL CONFORM TO THE DETAILS FOR CONTRACTION JOINTS.

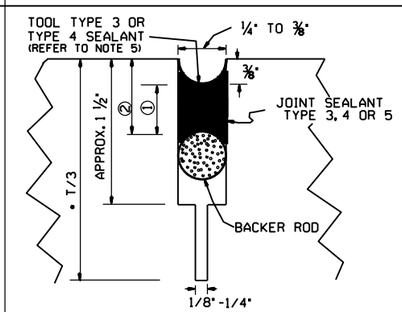

*NOTE: T/3 SAW CUT NOT REQUIRED FOR LONGITUDINAL CONSTRUCTION JOINT.

DETAIL OF SAWED
LONGITUDINAL JOINT
AND LONGITUDINAL CONSTRUCTION JOINT

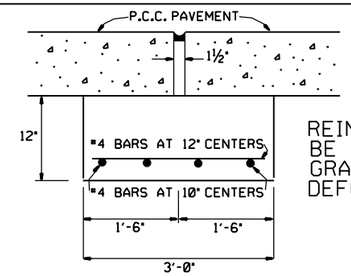

REINFORCING SHALL BE GRADE 40 OR GRADE 60 DEFORMED BARS.

DETAIL OF JOINT SUPPORT
FOR EXPANSION JOINTS

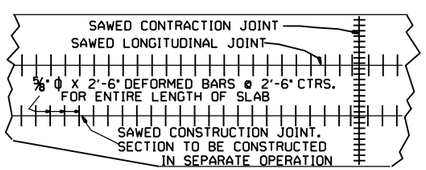

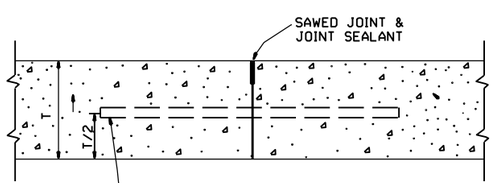

NOTE: TIE BARS SHALL BE 15" FROM TRANSVERSE JOINTS.

LONGITUDINAL CONSTRUCTION JOINT

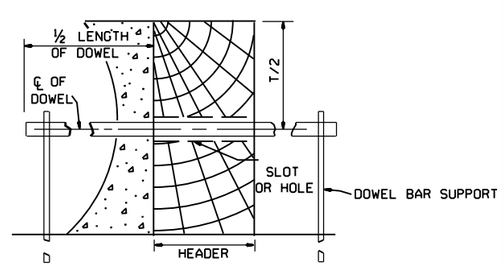

SECTION

TRANSVERSE
CONSTRUCTION JOINT

DATE	REVISION	DATE FILMED
11-07-19	REV. EXP. JOINT REF ON APP. SLAB	
5-25-06	ADDED GENERAL NOTE 7	
10-9-03	REMOVED TIE BAR COATING & REVISED GENERAL NOTES	
11-16-01	ADDED TOOL SEALANT AND NOTE 5; REVISED NOTE 3	
4-26-96	REVISED CONTRACTION JOINT NOTE	
11- 3-94	ADDED NOTE RE: REINF. BARS	
4- 1-93	REVISED DOWEL BARS & GEN. NOTES	4- 1-93
10- 1-92	REVISED DOWEL SPACING	10- 1-92
8- 15-91	ADDED SPAC FOR CONTR JTS & DEL KEYWAY	
05-24-90	REVISED TIE BAR, DOWEL & JOINT SIZE	
01-25-90	ADDED EXPANSION JOINT	01-25-90
11-30-89	CHANGED T/4+1 TO T/3+1	11-30-89
03-23-89	ALTERED SAWED JOINT & ADDED NOTE	512-03-23-89
07-15-88	REVISED AND REDRAWN	632-07-15-88

GENERAL NOTES

1. "T" DENOTES THICKNESS OF SLAB.
2. DOWEL BARS SHALL BE PLACED IN ACCORDANCE WITH THE DIMENSIONS SHOWN. A TOLERANCE OF PLUS OR MINUS ONE INCH WILL BE ALLOWED FOR THE VERTICAL AND LATERAL PLACEMENT AND A TOLERANCE OF PLUS OR MINUS ¼" WILL BE ALLOWED FOR THE TILT AND SKEW. DOWEL BARS SHALL BE FIELD COATED FOR A MINIMUM DISTANCE OF 2" GREATER THAN HALF THE LENGTH OF THE BAR WITH AN APPROVED GREASE AS A BOND BREAKER JUST PRIOR TO PLACEMENT OF CONCRETE.
3. THE EXPANSION JOINT SUPPORT MAY BE CONSTRUCTED WITH CLASS "A", "S" OR PAVING CONCRETE. PAYMENT FOR THE JOINT SUPPORT SHALL BE FOR THE CONTRACT UNIT PRICE BID FOR THE CLASS OF CONCRETE SPECIFIED IN THE PLANS. PAYMENT FOR ALL OTHER WORK AND MATERIALS REQUIRED FOR THE CONSTRUCTION OF THE JOINT SUPPORT SHALL BE INCLUDED IN THE PRICE BID FOR THE ABOVE ITEMS.
4. CONTRACTION JOINTS SHALL BE CONSTRUCTED ON 15' CENTERS.
5. TOOLING NOT REQUIRED FOR SELF-LEVELING SILICONE.
6. UNLESS OTHERWISE SPECIFIED IN THE PLANS, CONCRETE SHOULDERS SHALL BE CONSTRUCTED ACCORDING TO THE DETAILS SHOWN HEREON. CONTRACTION JOINTS SHALL MATCH CONTRACTION JOINTS IN THE LANES.
7. TIE WIRES IN DOWEL BAR ASSEMBLIES SHALL NOT BE CUT PRIOR TO PLACEMENT OF PAVING CONCRETE.

ARKANSAS STATE HIGHWAY COMMISSION

TRANSVERSE & LONGITUDINAL JOINTS
FOR CONCRETE PAVEMENT (NON-REINFORCED)

STANDARD DRAWING CPTJ - 6A

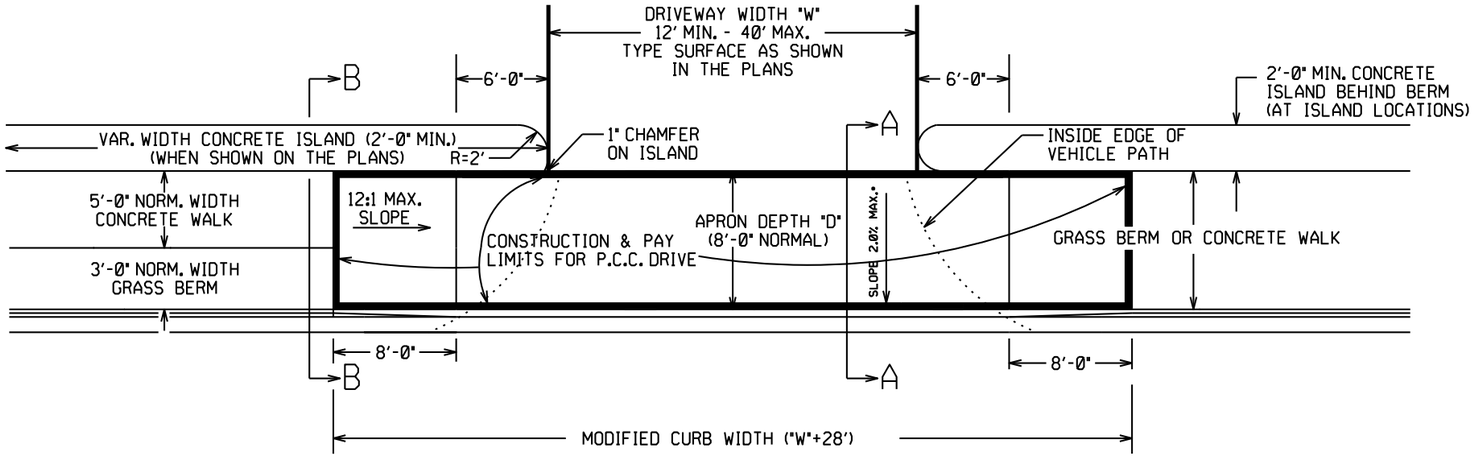

PLAN VIEW

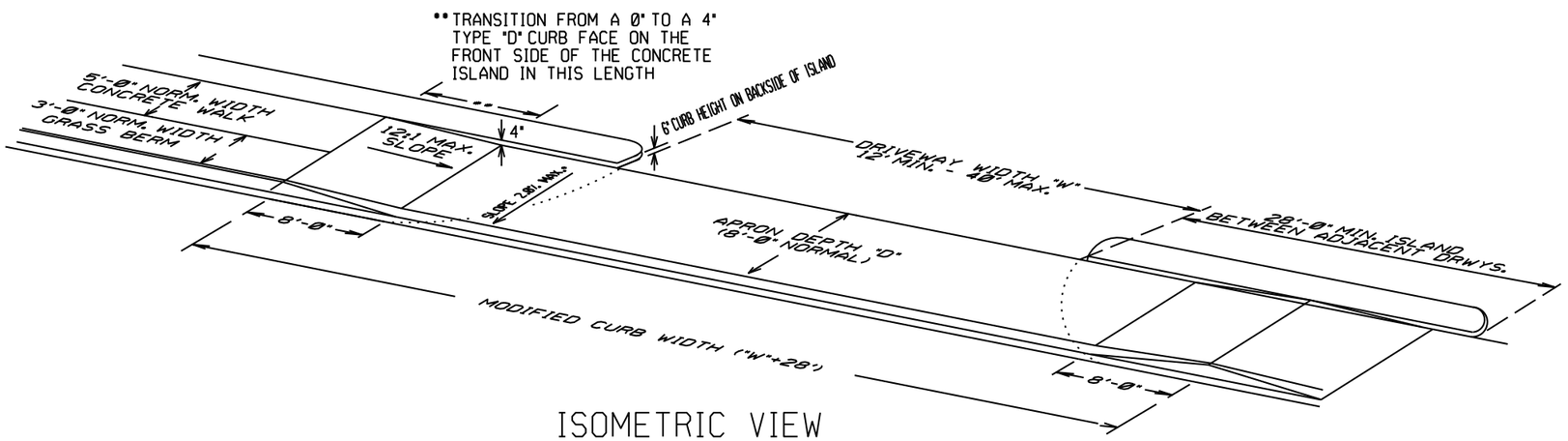

ISOMETRIC VIEW

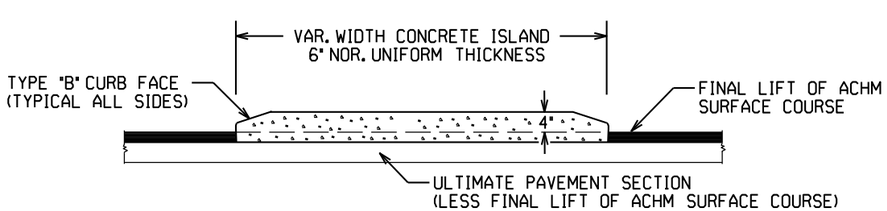

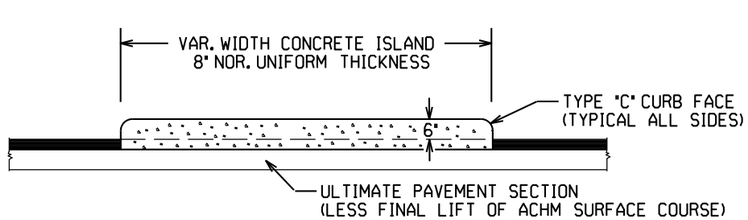

CURBED ISLANDS FOR CHANNELIZATION

CONCRETE ISLAND NOTES:

1. REFER TO PLANS FOR TYPE OF CURB FACE TO BE USED. NO DIRECT PAYMENT WILL BE MADE FOR THE CURB FACES SHOWN ON THE ISLAND DETAILS. PAYMENT FOR THE CURB FACE WILL BE INCLUDED IN THE UNIT PRICE BID FOR THE ITEM "CONCRETE ISLAND".

2. TRANSVERSE EXPANSION JOINTS, NOT LESS THAN 1/2" WIDE, SHALL BE PLACED AT MINIMUM INTERVAL OF 45'. TRANSVERSE JOINT SHALL BE CONSTRUCTED USING A JOINT FILLER COMPLYING WITH AASHTO M213.

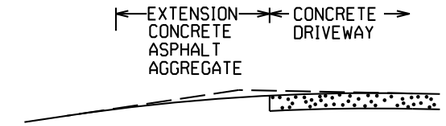

EXTENSION TYPICAL SECTIONS

1: CONCRETE - 6" P.C. CONCRETE DRIVEWAY

2: ASPHALT - 2" ACHM SURFACE COURSE (1/2")
4" ACHM BINDER COURSE (1") OR
4" ACHM BASE COURSE (1-1/2")

3: ASPHALT - 2" ACHM SURFACE COURSE (1/2")
7" AGGREGATE BASE COURSE

4: AGGREGATE - 6" AGGREGATE BASE COURSE

THE TYPE OF EXTENSION SHALL BE AS SHOWN IN THE PLANS. THE CONTRACTOR MAY, WITH THE APPROVAL OF THE ENGINEER, SUBSTITUTE A LOWER NUMBERED TYPE OF EXTENSION IN LIEU OF THE TYPE SPECIFIED IN THE PLANS, BUT AT NO ADDITIONAL COST TO THE DEPARTMENT.

DRIVEWAY EXTENSION DETAILS

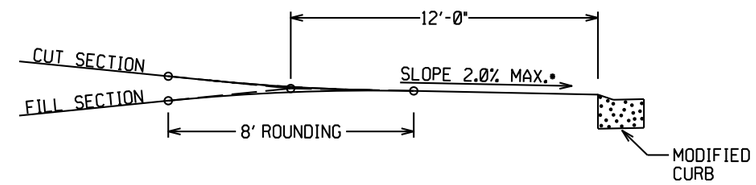

DRIVEWAY VERTICAL ALIGNMENT DETAILS

• NOTE: DRIVEWAYS MAY NOT BE SLOPED AWAY FROM THE ROADWAY UNLESS APPROVED BY THE ENGINEER.

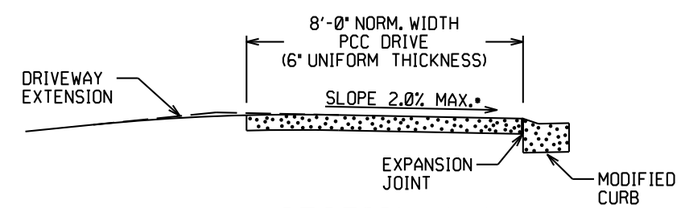

SECTION A-A

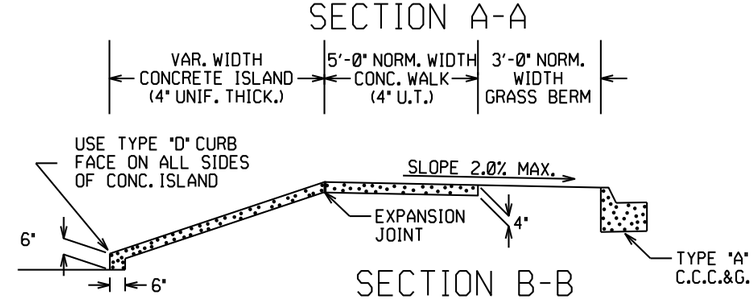

SECTION B-B

CURBED ISLAND BEHIND WALK

DATE REV	DATE FILMED	DESCRIPTION
5-19-22		REVISED ISLAND NOTES
11-07-19		REVISED WALK DETAILS
2-27-14		REVISED PLAN & ISOMETRIC VIEW
11-29-07		ADDED CHANNELIZATION ISLAND WITH TYPE C CURB FACE & REVISED DRIVEWAY SLOPE NOTE & VERTICAL ALIGNMENT DETAIL
11-10-05		REV. APRON SLOPE & DEPTH OF AGG. BASE.
8-22-02		ADDED ISLAND DETAILS & NOTES
3-30-00		REV. MOD. CURB WIDTH & TRANS. NOTE
11-19-98		REVISED NOTES
11-18-98		REDRAWN AND REISSUED

ARKANSAS STATE HIGHWAY COMMISSION

DETAILS OF DRIVEWAYS & ISLANDS

STANDARD DRAWING DR-1

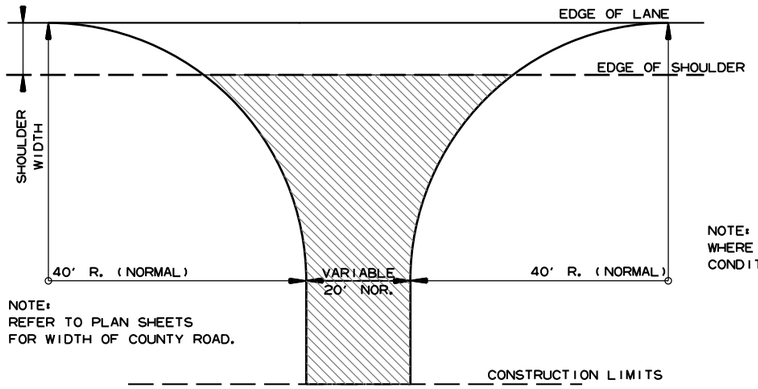

NOTE:
REFER TO PLAN SHEETS
FOR WIDTH OF COUNTY ROAD.

NOTE: TURNOUTS SHALL BE MODIFIED WHERE NECESSARY TO MEET LOCAL CONDITIONS AS DIRECTED BY THE ENGINEER.

ACHM SURFACE COURSE (1/2") (220 LBS. PER SQ. YD.) AND AGGREGATE BASE COURSE (CLASS 7) 7" COMP. DEPTH, UNLESS OTHERWISE SPECIFIED IN PLANS.

DETAIL FOR COUNTY ROAD TURNOUTS OPEN SHOULDER SECTION

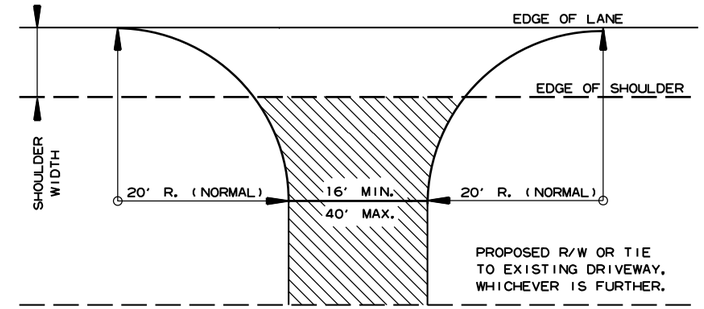

NOTE: TURNOUTS AND PRIVATE DRIVES SHALL BE MODIFIED WHERE NECESSARY TO MEET LOCAL CONDITIONS AS DIRECTED BY THE ENGINEER.

ACHM SURFACE COURSE (1/2") (220 LBS. PER SQ. YD.) AND AGGREGATE BASE COURSE (CLASS 7) 7" COMP. DEPTH IF ASPHALT OR GRAVEL DRIVE EXISTING; OR 6" CONCRETE IF CONCRETE DRIVE EXISTING.

DETAIL FOR DRIVEWAY TURNOUTS OPEN SHOULDER SECTION (ARTERIALS)

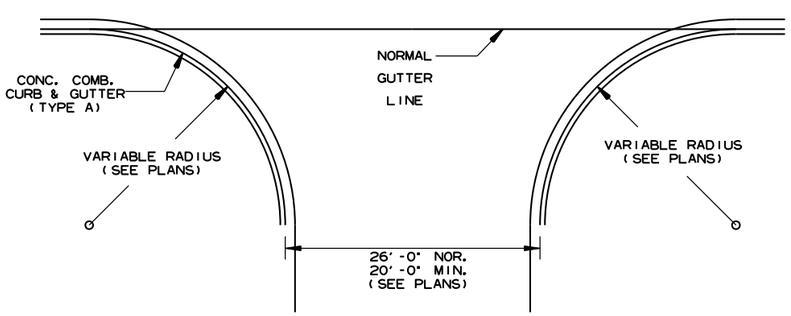

NOTE:
PAVEMENT STRUCTURE FOR STATE HIGHWAYS, CITY STREETS, & COUNTY ROADS TO BE SAME AS MAIN LANES.

DETAIL OF TURNOUTS, ASPHALT STREETS, COUNTY ROADS & STATE HIGHWAYS CURB & GUTTER SECTION

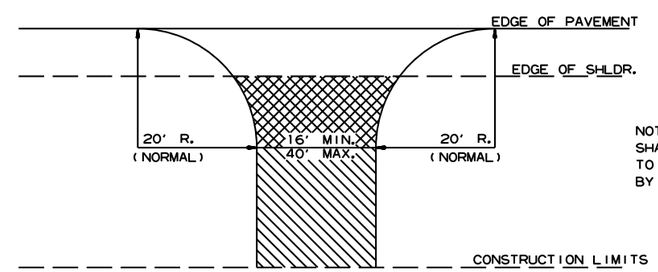

NOTE: TURNOUTS AND PRIVATE DRIVES SHALL BE MODIFIED WHERE NECESSARY TO MEET LOCAL CONDITIONS AS DIRECTED BY THE ENGINEER.

ASPHALT CONCRETE HOT MIX SURFACE COURSE (220 LBS. PER SQ. YD.) AGGREGATE BASE COURSE (CLASS 7) 7" COMP. DEPTH IF ASPHALT DRIVE EXIST OR 6" CONCRETE IF CONCRETE DRIVE EXIST.

AGGREGATE BASE COURSE (CLASS 7) 9" COMP. DEPTH OR CONFORM TO EXISTING DRIVEWAY

DETAIL FOR DRIVEWAY TURNOUTS (COLLECTORS)

DATE REV	DATE FILMED	DESCRIPTION
5-19-22		ISSUED

ARKANSAS STATE HIGHWAY COMMISSION

DETAILS OF DRIVEWAYS & STREET TURNOUTS

STANDARD DRAWING DR-2

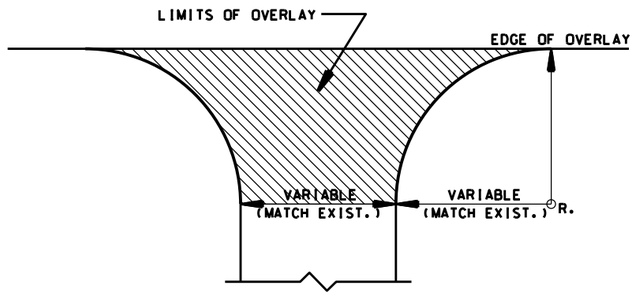

DETAIL FOR STATE HIGHWAY TURNOUTS
(PAVEMENT PRESERVATION)

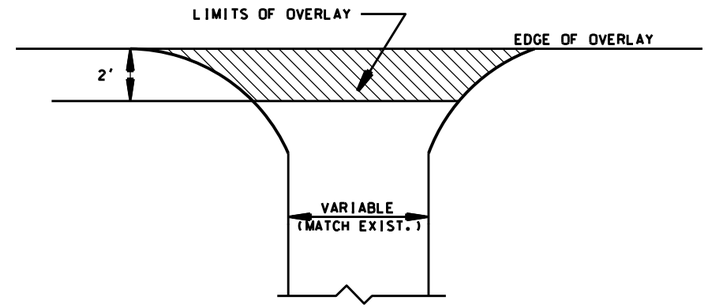

DETAIL FOR DRIVEWAY TURNOUTS
(PAVEMENT PRESERVATION)

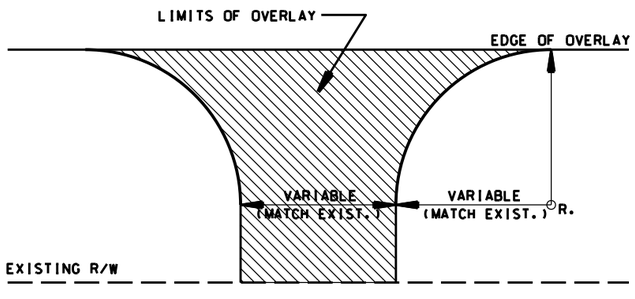

DETAIL FOR CITY STREET
AND COUNTY ROAD TURNOUTS
(PAVEMENT PRESERVATION)

NOTES:

1. TURNOUTS AND PRIVATE DRIVES SHALL BE MODIFIED WHERE NECESSARY TO MEET LOCAL CONDITIONS AS DIRECTED BY THE ENGINEER.
2. NORMAL ACHM SURFACE COURSE (1/2") (220 LBS PER SQ. YD.) SHALL BE USED ON DRIVEWAYS AND TURNOUTS UNLESS SHOWN OTHERWISE IN THE PLANS.
3. STATE HIGHWAY TURNOUTS SHALL BE PAVED TO THE BACK OF THE RADIUS.
4. CITY STREET AND COUNTY ROAD TURNOUTS SHALL BE PAVED TO THE RIGHT-OF-WAY LIMITS.

DATE REV	DATE FILMED	DESCRIPTION
4-13-23		REVISED PAVING AT TURNOUTS
5-19-22		ISSUED

ARKANSAS STATE HIGHWAY COMMISSION

DETAILS OF DRIVEWAYS & STREET TURNOUTS (PAVEMENT PRESERVATION)

STANDARD DRAWING DR-3

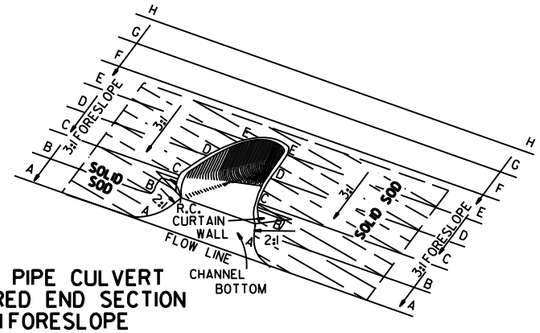

TYPICAL PIPE CULVERT
WITH FLARED END SECTION
& 3:1 FORESLOPE

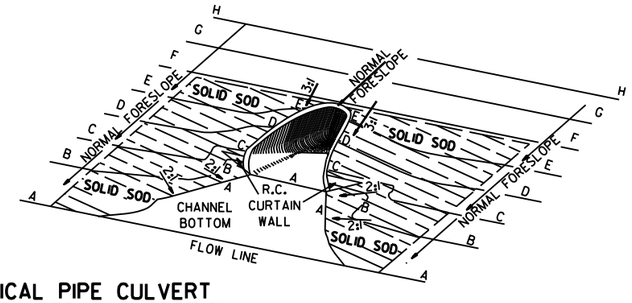

TYPICAL PIPE CULVERT
WITH FLARED END SECTION
& FLATTENED ADJACENT SLOPES

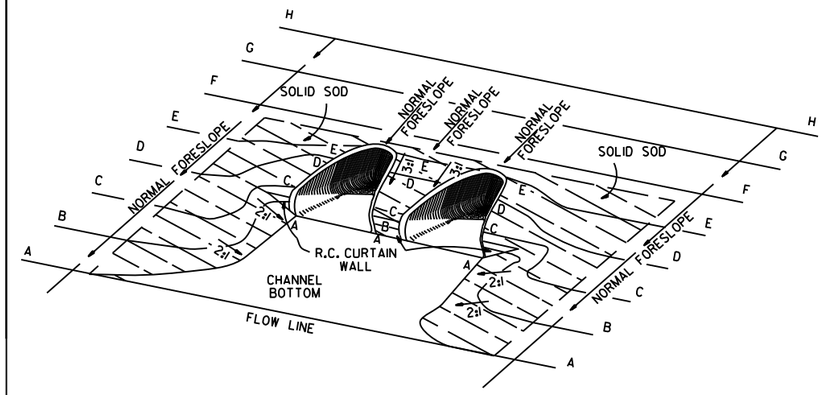

TYPICAL MULTIPLE PIPE CULVERT
WITH FLARED END SECTIONS
& FLATTENED ADJACENT SLOPES

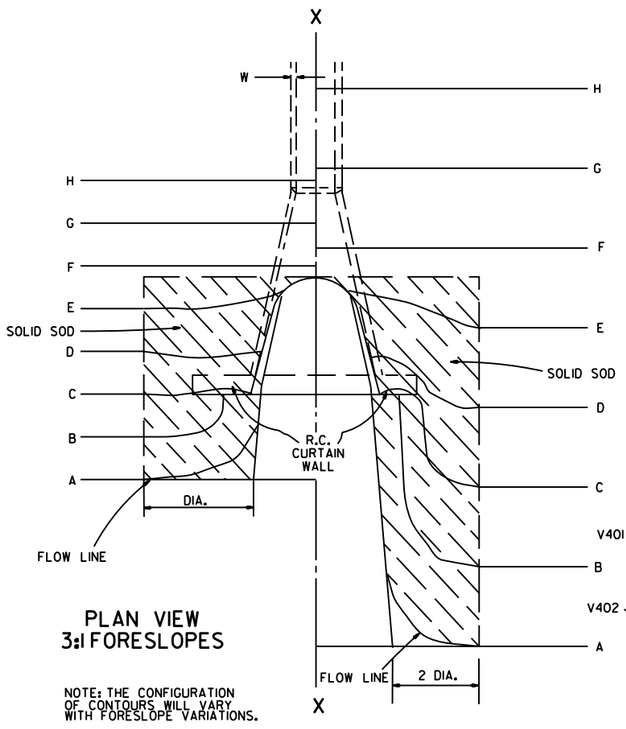

PLAN VIEW
3:1 FORESLOPES

NOTE: THE CONFIGURATION OF CONTOURS WILL VARY WITH FORESLOPE VARIATIONS.

PLAN VIEW
FLATTENED FORESLOPES

R.C. CURTAIN WALL DIMENSIONS & QUANTITIES

PIPE DIA.	H_1	L_1	L	L (DBL.)/2	SINGLE R.C.P.C. CONC.	SINGLE R.C.P.C. REINF. STEEL	DOUBLE R.C.P.C. CONC.	DOUBLE R.C.P.C. REINF. STEEL
					CU. YDS.	LBS.	CU. YDS.	LBS.
18"	11½"	3'-5"	8'-0"	6'-3"	0.31	27.7	0.45	39.5
24"	1'-0½"	4'-6"	9'-6"	7'-6"	0.37	33.4	0.53	48.0
30"	1'-3½"	5'-7"	11'-0"	9'-0"	0.45	39.0	0.67	59.0
36"	1'-7"	6'-8"	13'-0"	10'-6"	0.58	52.6	0.83	73.9
42"	2'-1½"	7'-3"	15'-6"	12'-0"	0.82	77.1	1.10	100.7
48"	2'-5"	7'-10"	17'-0"	13'-0"	0.98	94.9	1.27	120.4
54"	2'-9½"	8'-5"	18'-6"	14'-0"	1.16	115.8	1.47	143.7
60"	3'-4"	9'-0"	20'-6"	15'-6"	1.47	149.7	1.84	180.3
72"	4'-5"	10'-2"	25'-6"	18'-6"	2.31	232.6	2.73	271.0

NOTE: QUANTITIES SHOWN ARE FOR ONE (1) CURTAIN WALL.

REINFORCING STEEL SCHEDULE

PIPE DIA.	SINGLE R.C. PIPE CULVERT H401 L	H401 NO.	H402 L	H402 NO.	V401 L	V401 NO.	V402 L	V402 NO.	DOUBLE R.C. PIPE CULVERT H401 L	H401 NO.	H402 L	H402 NO.	H403 L	H403 NO.	V401 L	V401 NO.	V402 L	V402 NO.
18"	7'-8"	2	1'-11½"	4	1'-7½"	8	8"	8	12'-2"	2	1'-11½"	4	8"	2	1'-7½"	10	8"	14
24"	9'-2"	2	2'-2"	4	1'-8½"	10	8"	9	14'-8"	2	2'-2"	4	8"	2	1'-8½"	12	8"	18
30"	10'-8"	2	2'-4½"	4	1'-11½"	10	8"	12	17'-8"	2	2'-4½"	4	8"	2	1'-11½"	14	8"	22
36"	12'-8"	2	2'-10"	6	2'-3"	12	8"	14	20'-8"	2	2'-10"	6	8"	3	2'-3"	14	8"	28
42"	15'-2"	2	3'-9½"	8	2'-9½"	16	8"	15	23'-8"	2	3'-9½"	8	8"	4	2'-9½"	18	8"	30
48"	16'-8"	2	4'-3"	10	3'-1"	18	8"	16	25'-8"	2	4'-3"	10	8"	5	3'-1"	20	8"	32
54"	18'-2"	2	4'-8½"	12	3'-5½"	20	8"	17	27'-8"	2	4'-9"	12	8"	6	3'-5½"	22	8"	34
60"	20'-2"	2	5'-5"	14	4'-0"	24	8"	18	30'-8"	2	5'-5"	14	8"	7	4'-0"	26	8"	36
72"	25'-2"	2	7'-4"	18	5'-1"	30	8"	20	36'-8"	2	7'-4"	18	8"	9	5'-1"	33	8"	40

ALL REINFORCING STEEL #4 BARS @ 6" O.C.

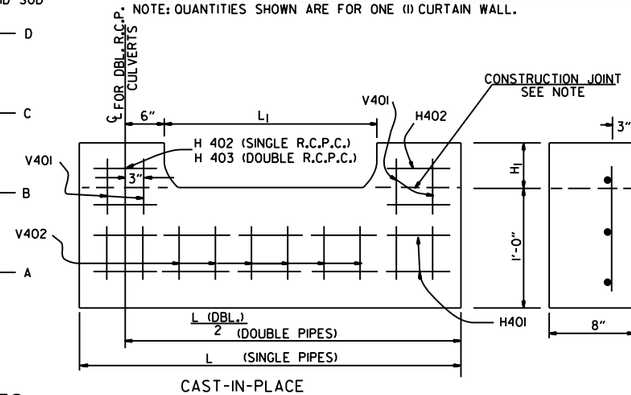

CAST-IN-PLACE

NOTE: THE PORTION OF THE R.C. CURTAIN WALL BENEATH THE FLARED END SECTION (LOWER 1'-0") SHALL BE PLACED MONOLITHICALLY. THE FLARED END SECTION SHALL THEN BE SET IN PLACE & THE REMAINING PORTIONS OF THE R.C. CURTAIN WALL PLACED.

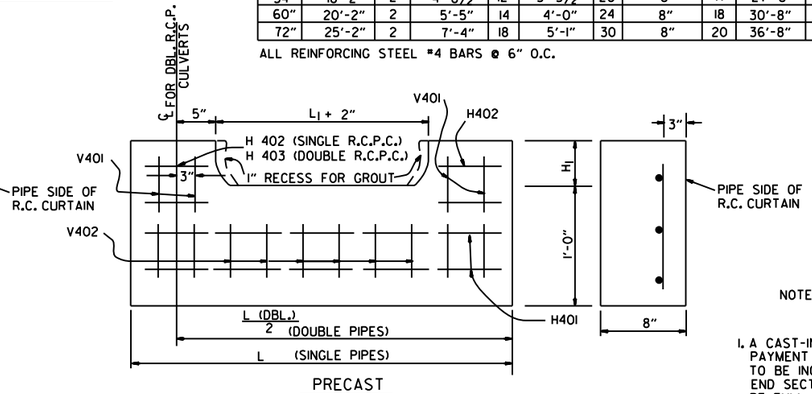

PRECAST

NOTE: THE PRECAST CURTAIN WALL WILL BE SET AND BACKFILLED WITH COMPACTED MATERIAL. THE FLARED END SECTION SHALL THEN BE SET IN PLACE AND THE 1" RECESS FILLED WITH GROUT. WHERE "L" EXCEEDS 11' THE CURTAIN WALL MAY BE CAST IN TWO (2) OR MORE SECTIONS. THE METHOD OF JOINING THE SECTIONS FOR INSTALLATION SHALL BE APPROVED BY THE ENGINEER.

R.C. CURTAIN WALL DETAILS

SOLID SODDING

PIPE DIA.	SINGLE R.C.P.C. 3:1	SINGLE R.C.P.C. 4:1	SINGLE R.C.P.C. 6:1	DOUBLE R.C.P.C. 3:1	DOUBLE R.C.P.C. 4:1	DOUBLE R.C.P.C. 6:1
	SQ. YDS.			SQ. YDS.		
18"	5	7	12	6	8	13
24"	8	12	19	9	13	20
30"	13	18	29	14	19	30
36"	17	26	41	18	28	43
42"	23	35	55	25	37	57
48"	29	46	68	31	48	70
54"	35	57	85	37	59	87
60"	45	62	104	48	65	107
72"	64	92	156	67	95	159

NOTE: QUANTITIES SHOWN ABOVE ARE FOR ONE (1) END OF F.E.S.

GENERAL NOTES

1. A CAST-IN-PLACE OR PRECAST CURTAIN WALL MAY BE USED. PAYMENT FOR THE CURTAIN WALL SHALL BE CONSIDERED TO BE INCLUDED IN THE UNIT PRICE BID EACH FOR FLARED END SECTIONS OF THE SEVERAL SIZES, WHICH PRICE SHALL BE FULL COMPENSATION FOR FURNISHING ALL MATERIALS INCLUDING REINFORCING STEEL AND CONCRETE; FOR FORMS, MIXING AND PLACING; FOR EXCAVATION AND BACKFILL, AND FOR ALL LABOR, TOOLS, EQUIPMENT AND INCIDENTALS NECESSARY TO COMPLETE THE WORK.
2. ALL EXPOSED EDGES SHALL BE CHAMFERED ¾".
3. CONCRETE FOR CURTAIN WALL SHALL MEET THE REQUIREMENTS FOR CLASS A OR S CONCRETE AS PROVIDED IN SECTION 802 OF THE STANDARD SPECIFICATIONS OR FOR PAVING CONCRETE AS PROVIDED IN SECTION 501 OF THE STANDARD SPECIFICATIONS.
4. WELDED WIRE MESH 3 x 3 W/10 x W10 MAY BE USED IN LIEU OF REINFORCING BARS.

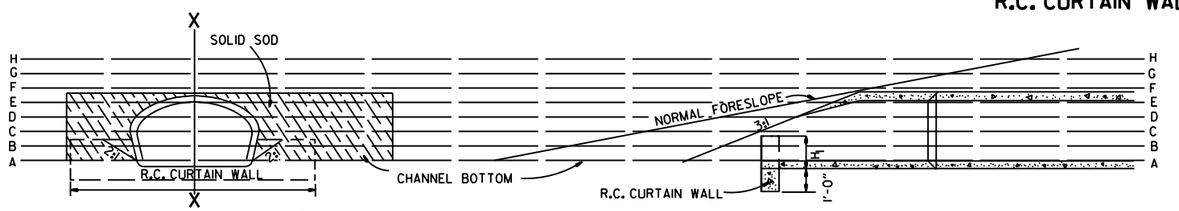

END VIEW

SECTIONAL VIEW "X-X"

DATE	REVISION	FILMED
10-18-96	ADDED NOTE TO SOLID SODDING	
10-12-95	CORRECTED SPELLING	
11- 3-94	ADDED GENERAL NOTE NO. 4	
8-15-91	REV. CURTAIN WALL QUANT. STEEL SCH. & SOLID SOD QUANT.	
3-2-81	ALLOW PRECAST IN 2 OR MORE PIECES CHAMFER EDGES	
5-15-80	ADDED PRECAST WALL & GENERAL NOTES	
10-2-72	REVISED AND REDRAWN	

ARKANSAS STATE HIGHWAY COMMISSION

FLARED END SECTION

STANDARD DRAWING FES-1

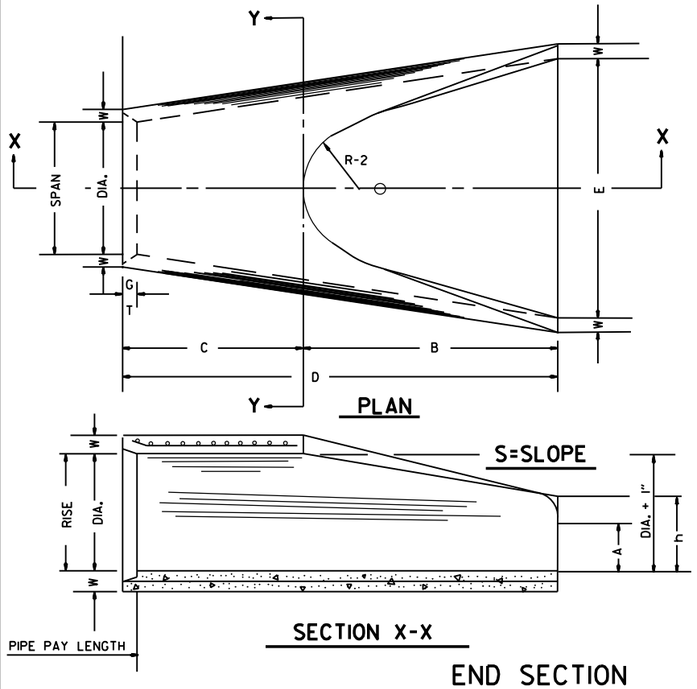

TABLE OF DIMENSIONS

DIA.	WALL	A	B	C	D	E	S	DIA. + 1"	P	R-1	R-2	G-T	WT.	h
18"	2½"	9"	2'-3"	3'-10"	6'-1"	3'-0"	3:1	19"	29"	15½"	12"	2"	1000	1'-0½"
24"	3"	9½"	3'-7½"	2'-6"	6'-1½"	4'-0"	3:1	25"	33 3/16"	16 15/16"	14"	2½"	1600	1'-1½"
30"	3½"	1'-0"	4'-6"	1'-7¾"	6'-1¾"	5'-0"	3:1	31"	37"	18½"	15"	3¼"	1940	1'-4⅝"
36"	4"	1'-3"	5'-3"	2'-10¾"	8'-1¾"	6'-0"	3:1	37"	47 13/16"	24 5/16"	20"	3½"	4100	1'-8"
42"	4½"	1'-9"	5'-3"	2'-11"	8'-2"	6'-6"	3:1	43"	53⅞"	27½"	22"	3½"	5380	2'-2½"
48"	5"	2'-0"	6'-0"	2'-2"	8'-2"	7'-0"	3:1	49"	56½"	28½"	22"	3½"	6550	2'-6"
54"	5½"	2'-4"	6'-6"	1'-10"	8'-4"	7'-6"	3:1	55"	65½"	33⅛"	24"	4"	8750	2'-10½"
60"	6"	2'-10"	6'-6"	1'-10"	8'-4"	8'-0"	3:1	61"	72½"	36 11/16"	24"	4"	9270	3'-5"
72"	7"	3'-10"	6'-6"	1'-10"	8'-4"	9'-0"	3:1	73"	77 13/16"	38 15/16"	24"	5"	13250	4'-6"

ARCH PIPE

EQUIV. DIA.	• SPAN AASHTO M 206	• SPAN AHD NOMINAL	• RISE AASHTO M 206	• RISE AHD NOMINAL	W	A	B	C	D	E	P	R2	G-T	S
INCHES														
15	18	18	11	11	2"	4"	2'-0"	4'-0"	6'-0"	3'-0"	29"	12"	1½"	2½:1
18	22	22	13½	14	2½"	5"	2'-0"	4'-1"	6'-1"	3'-6"	32⅛"	13"	2½"	2½:1
21	26	26	15½	16	2¾"	7"	2'-3"	3'-10"	6'-1"	4'-0"	34⅛"	14"	2½"	2½:1
24	28½	29	18	18	3"	9"	2'-3"	3'-10"	6'-1"	5'-0"	36 11/16"	15"	2½"	2½:1
30	36¼	36	22½	23	3½"	10"	3'-1"	3'-0½"	6'-1½"	6'-0"	47 11/16"	20"	3"	2½:1
36	43¾	44	26⅝	27	4"	10½"	4'-0"	2'-11½"	6'-1½"	6'-6"	54 5/16"	22"	3½"	2½:1
42	51⅛	51	31 5/16	31	4½"	11½"	4'-7"	1-10¼"	6'-5¼"	7'-2"	59½"	23"	3¾"	2½:1
48	58½	59	36	36	5"	1'-3"	5'-3"	2'-10¾"	8'-1¾"	7'-10"	70 5/16"	24"	4¼"	2½:1
54	65	65	40	40	5½"	1'-7"	5'-3"	2'-11"	8'-2"	8'-6"	72 1/16"	24"	4¾"	2¼:1
60	73	73	45	45	6"	1'-10"	5'-6"	2'-8"	8'-2"	9'-0"	77 13/16"	24"	5"	2¼:1

• THE MEASURED SPAN AND RISE SHALL NOT VARY MORE THAN ± 2 PER CENT FROM THE VALUES SPECIFIED BY AASHTO M 206.

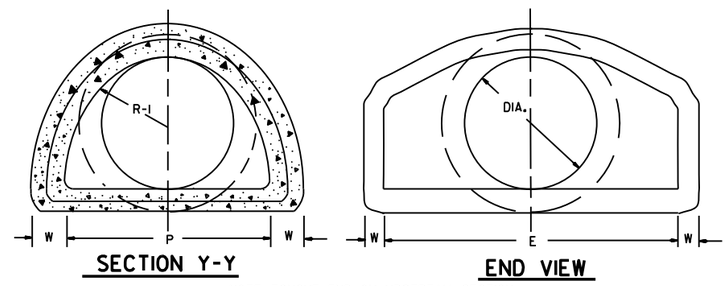

NOTE: TONGUE END ON UPSTREAM SECTION
GROOVE END ON DOWNSTREAM SECTION

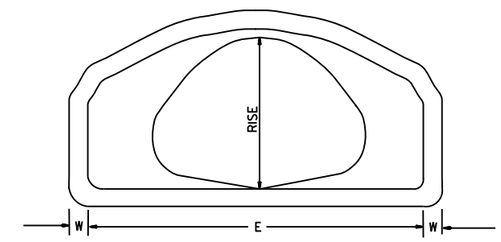

END VIEW
CONCRETE ARCH PIPE

END SECTION FOR REINFORCED CONCRETE PIPE CULVERTS

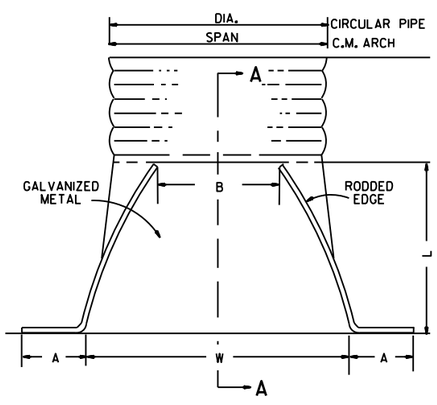

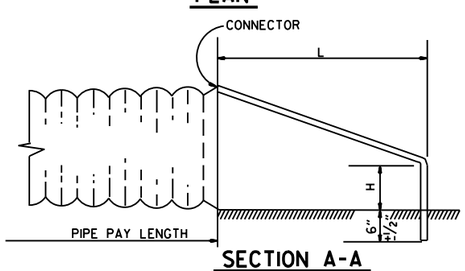

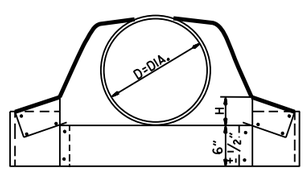

CIRCULAR PIPE

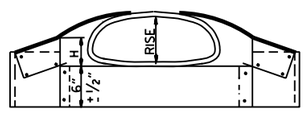

C.M. ARCH PIPE

CIRCULAR PIPE

D. DIA.	GAUGE	A 1" ±	B. MAX.	H 1" ±	L 1½" ±	W 2" ±	S
		INCHES					
12	16	6	6	6	21	24	2½:1
15	16	7	8	6	26	30	2½:1
18	16	8	10	6	31	36	2½:1
21	16	9	12	6	36	42	2½:1
24	16	10	13	6	41	48	2½:1
30	14	12	16	8	51	60	2½:1
36	14	14	19	9	60	72	2½:1
42	12	16	22	11	69	84	2½:1
48	12	18	27	12	78	90	2½:1
54	12	18	30	12	84	102	2:1
60	12	18	33	12	87	114	1¾:1
66	12	18	36	12	87	120	1½:1
72	12	18	39	12	87	126	1 1/3:1

C.M. ARCH PIPE

EQUIV. DIA.	SPAN	RISE	A 1" ±	B MAX.	H 1" ±	L 1½" ±	W 2" ±	S	GAUGE
	INCHES								
15"	17	13	7	9	6	19	30	2½:1	16
18"	21	15	7	10	6	23	36	2½:1	16
21"	24	18	8	12	6	28	42	2½:1	16
24"	28	20	9	14	6	32	48	2½:1	16
30"	35	24	10	16	6	39	60	2½:1	14
36"	42	29	12	18	8	46	75	2½:1	14
42"	49	33	13	21	9	53	85	2½:1	12
48"	57	38	18	26	12	63	90	2½:1	12
54"	64	43	18	30	12	70	102	2¼:1	12
60"	71	47	18	33	12	77	114	2¼:1	12

NOTE: ALTERNATE CONNECTIONS TO THE PIPE CULVERTS, IN ACCORDANCE WITH MANUFACTURER'S STANDARD PRACTICES, MAY BE MADE SUBJECT TO THE APPROVAL OF THE ENGINEER.

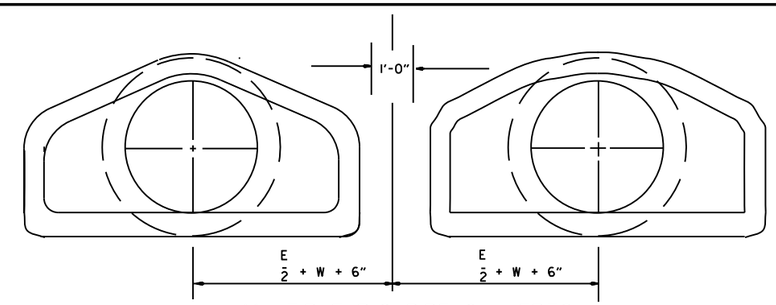

MULTIPLE R.C. PIPE CULVERTS

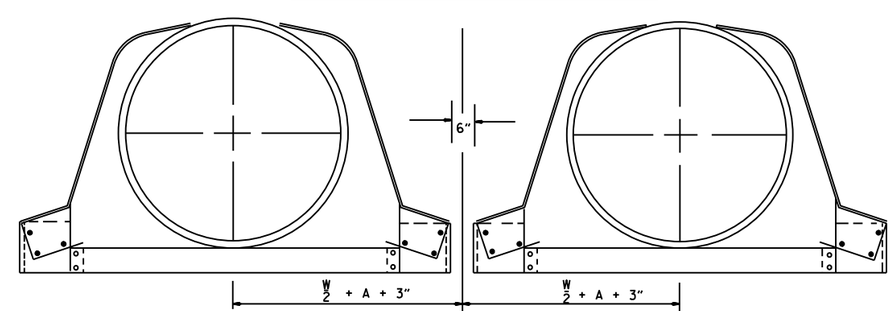

MULTIPLE C.M. PIPE CULVERTS

END SECTIONS FOR CORRUGATED METAL PIPE CULVERTS

DATE	REVISION	FILMED
10-18-96	REVISED ASTM REF. TO AASHTO	
5-15-80	REVISED DISTANCE BETWEEN MULTIPLE R.C.P. F.E.S.	664-5-15-80
7-14-78	C.M. ARCH SIZES TO CONFORM WITH AASHTO SIZES	752-7-14-78
8-22-75	ADDED MULTIPLE PIPE CULVERTS	517-8-22-75
12-5-74	REMOVED NOTE RE REINF. FOR R.C. F.E.S.	500-12-5-74
5-24-73	CMP END SECTION, SHOW PIPE PAY LENGTH	627-5-24-73
10-2-72	REVISED AND REDRAWN	760-10-2-72

ARKANSAS STATE HIGHWAY COMMISSION

FLARED END SECTION

STANDARD DRAWING FES-2

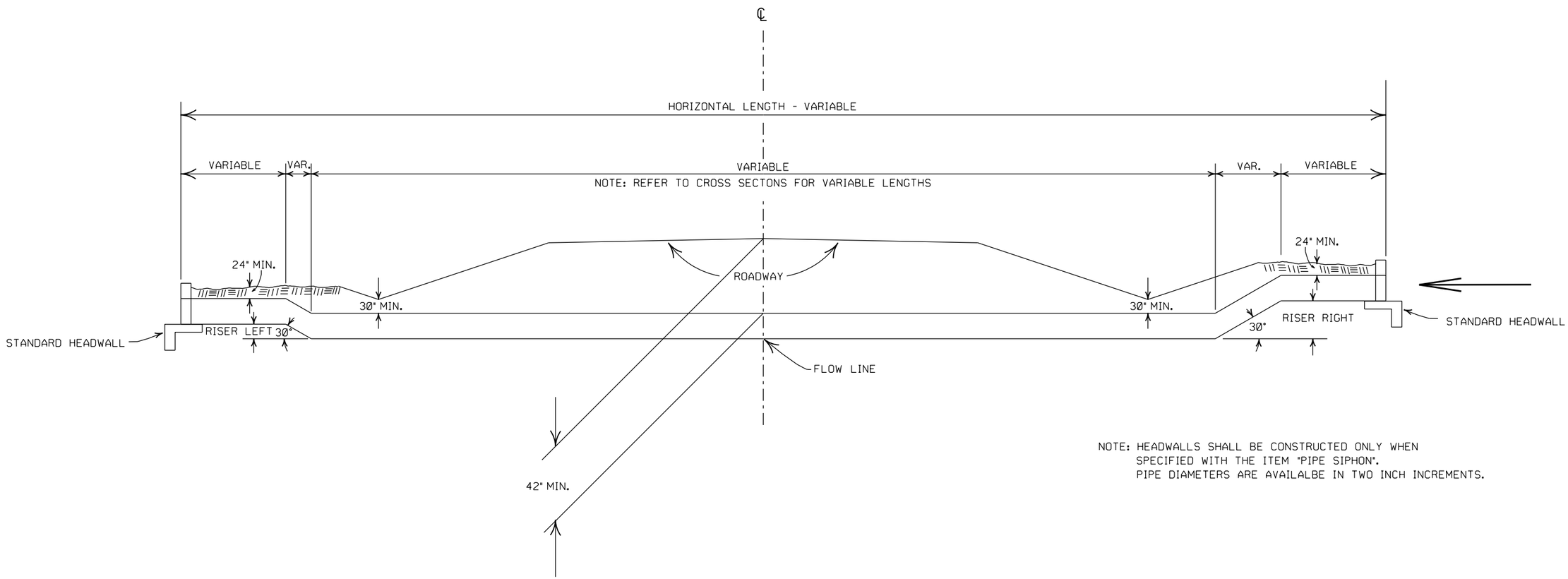

NOTE: HEADWALLS SHALL BE CONSTRUCTED ONLY WHEN
SPECIFIED WITH THE ITEM "PIPE SIPHON".
PIPE DIAMETERS ARE AVAILALBE IN TWO INCH INCREMENTS.

DATE	REVISION	FILMED
1-12-00	CORRECTED SPELLING	
1-4-83	MINIMUM COVER INCREASED	678-1-4-83
10-2-72	REVISED AND REDRAWN	758-10-2-72

ARKANSAS STATE HIGHWAY COMMISSION

PIPE SIPHON

STANDARD DRAWING FPC-2A

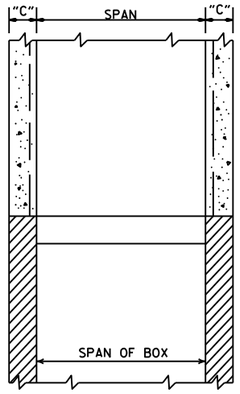

SECTION B-B

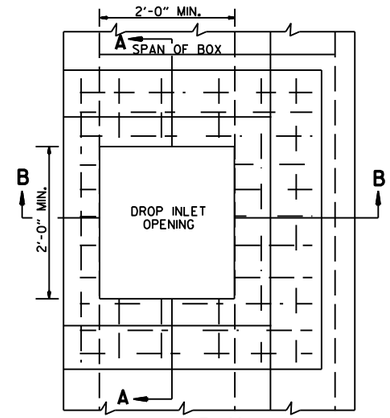

PLAN

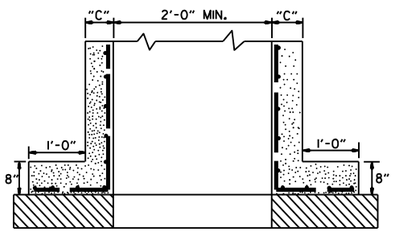

SECTION A-A

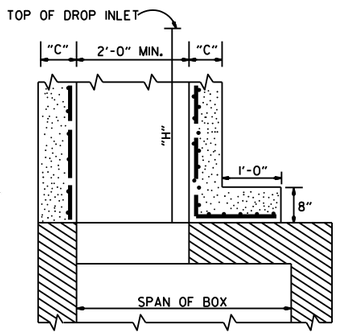

SECTION B-B

METHOD OF CONSTRUCTING DROP INLET ON EXISTING R.C. BOX CULVERT

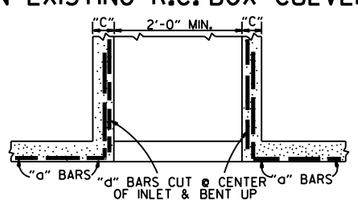

SECTION A-A

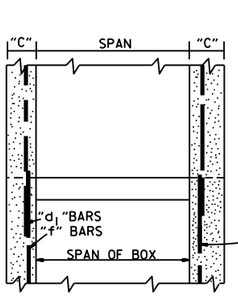

SECTION B-B

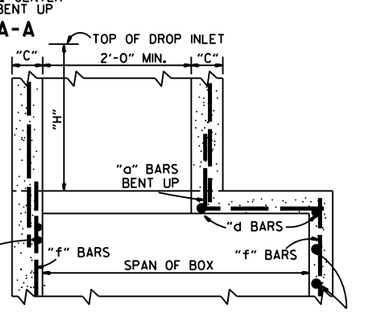

SECTION B-B

METHOD OF CONSTRUCTING DROP INLET ON NEW R.C. BOX CULVERT

NOTE: "C" DIMENSIONS AND REINFORCING BAR SIZES, SHALL CONFORM TO THOSE SHOWN ON STANDARD DRAWING FOR DROP INLET.

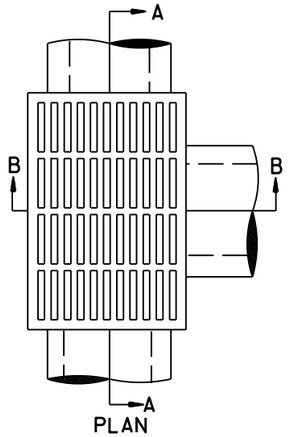

PLAN

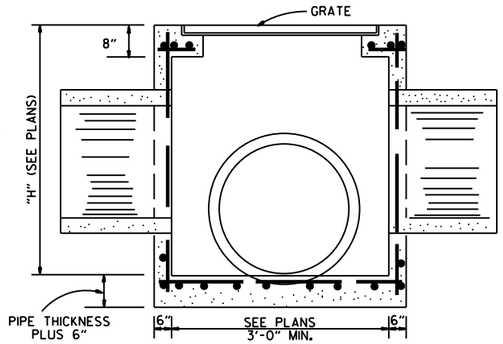

SECTION A-A

NOTE: REINF. BARS TO BE #4 BARS ON 6" CTRS. WITH 1½" MIN. COVER. THIS TYPE DROP INLET TO BE USED WHERE NOT SUBJECTED TO TRAFFIC.

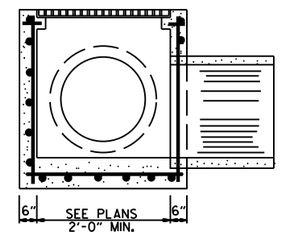

SECTION B-B

DROP INLET (TYPE E)

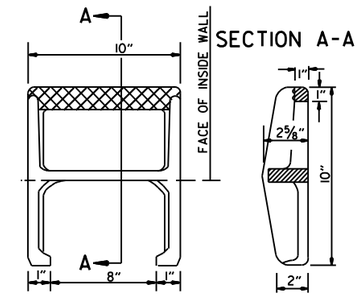

SECTION A-A

APPROX. WEIGHT = 11 LBS. (CAST IRON)

PLAN

NOTE: THIS DETAIL IS TYPICAL. OTHERS MAY BE USED WITH PRIOR APPROVAL OF THE ENGINEER.

DETAIL OF STEP FOR DROP INLET

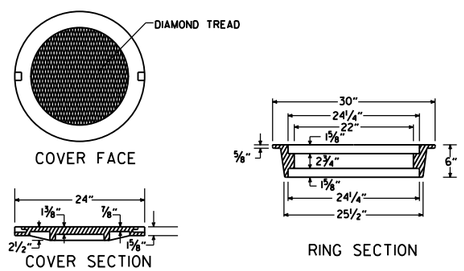

APPROXIMATE TOTAL WEIGHT = 333 LBS.

HEAVY DUTY RING & COVER

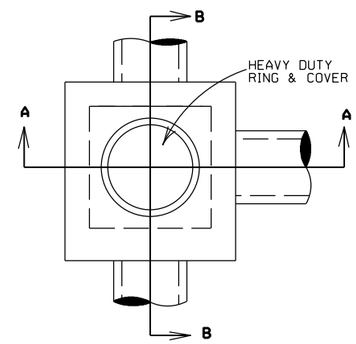

PLAN

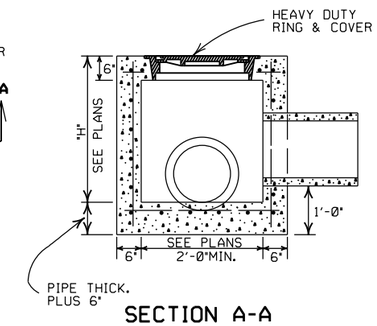

SECTION A-A

NOTE: REINF. BARS TO BE #4 BARS ON 6" CTRS. WITH 1½" MIN. COVER. THIS TYPE JUNCTION BOX TO BE USED WHERE NOT SUBJECTED TO TRAFFIC.

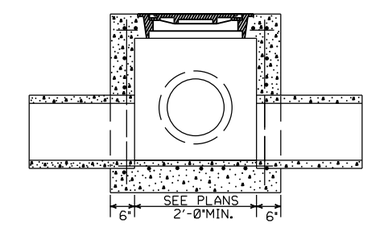

SECTION B-B

JUNCTION BOX (TYPE E)

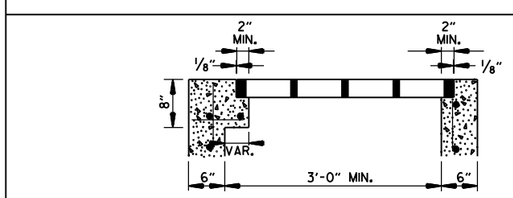

SECTION A-A

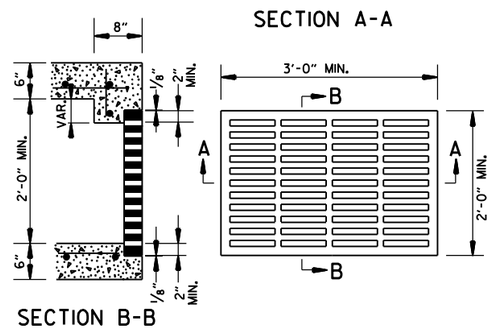

SECTION B-B

APPROXIMATE MINIMUM WATERWAY OPENING = 260 SQ. IN.

GRATE FOR TYPE E DROP INLET

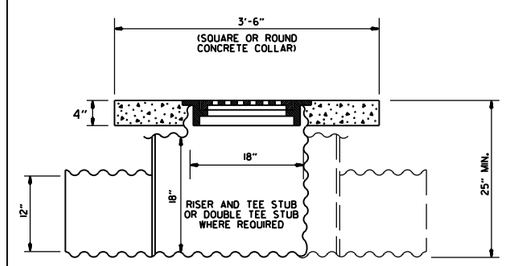

NOTE: CONCRETE COLLAR TO BE CAST IN PLACE. 12" PIPE CULVERTS TO BE MEASURED AND PAID FOR AS " 12" SIDE DRAIN ".

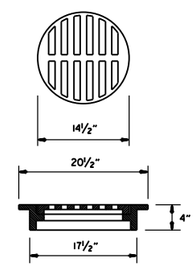

USE NEENAH R-5901-C OR EQUIVALENT BICYCLE SAFE FRAME AND GRATE

DETAIL OF YARD DRAIN

GENERAL NOTES:

1. ALL EXPOSED CORNERS SHALL BE ¾" CHAMFERED.
2. STEPS SHALL BE INSTALLED ON 16" CENTERS ON ALL INLETS 4'-0" HIGH OR OVER, OR AS APPROVED BY THE ENGINEER.
3. EXPANSION JOINT MATERIAL SHALL BE ¾" PREFORMED FIBER.
4. GRATE OR GRATE AND FRAME SHALL BE CONSTRUCTED OF CAST IRON AND SHALL CONFORM TO THE REQUIREMENTS OF THE STANDARD SPECIFICATIONS FOR GRAY IRON CASTINGS AASHTO M 105 CLASS 35B. GRATE MAY BE USED WITHOUT FRAME.
5. GRATE AND FRAME SHALL NOT BE PAINTED.
6. GRATE SHALL BE BICYCLE SAFE.
7. HEAVY DUTY RING SHALL ALWAYS BE INSTALLED WITH FLANGE ON TOP.
8. HEAVY DUTY RING AND COVER SHALL BE CONSTRUCTED OF CAST IRON AND SHALL CONFORM TO THE REQUIREMENTS OF THE STANDARD SPECIFICATIONS FOR GRAY IRON CASTINGS AASHTO M105 CLASS 35B & AASHTO M306.
9. HEAVY DUTY RING AND COVER SHALL NOT BE PAINTED.
10. DIMENSIONS SHOWN FOR RING AND COVER ARE TYPICAL. THE CONTRACTOR MAY SUBSTITUTE SIMILAR CASTINGS WITH THE APPROVAL OF THE ENGINEER. REQUESTING APPROVAL FOR CASTING DESIGNS MAY BE MADE BY REFERRING TO PREVIOUSLY APPROVED DRAWINGS.

DATE REV.	REVISION	DATE FILMED
11-16-01	ADDED NOTE 10	
1-12-00	REVISED HEAVY DUTY RING & COVER	
7-02-98	CHANGED GRATE DETAIL. DELETED DI(TYPE D), REPLACED RING & COVER W/HEAVY DUTY RING & COVER, ADDED JUNCTION BOX (TYPE E)	
6-26-97	ADDED DIMENSION TO TYPE IV-A	
10-18-96	ADDED DETAIL OF YARD DRAIN	
8-15-91	DELETE TYPE IV GRATE	
7-15-88	REVISED STEP DETAIL	
5-20-83	REVISED DETAILS OF GRATES (TYPE IV & IV-A)	
2-4-83	ADDED GENERAL NOTE NO. 4	
3-2-81	ADDED TYPE IV-A GRATE	
5-22-74	DELETED INLET (TYPE F) & GRATE (TYPE III)	
10-2-72	REVISED AND REDRAWN	

ARKANSAS STATE HIGHWAY COMMISSION

DETAILS OF DROP INLETS & JUNCTION BOXES

STANDARD DRAWING FPC-9

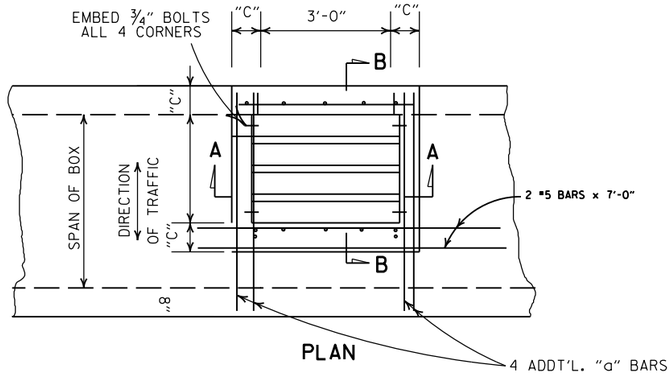

PLAN

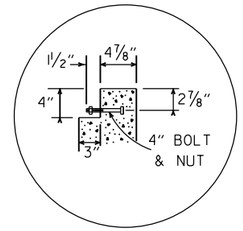

DETAIL A

GENERAL NOTES:

1. STEEL PIPE FOR GRATES AND BOLTS SHALL CONFORM TO THE REQUIREMENTS OF SECTION 807. BOLTS SHALL CONFORM TO ONE OF THE FOLLOWING: ASTM A193, GRADE B8 CLASS 1OR 2, ASTM A307 OR AASHTO M 164.
2. STEEL PIPE FOR GRATES SHALL BE "STANDARD WEIGHT" PIPE CONFORMING TO ASTM A53 NATIONAL STANDARD PIPE.
3. BOLTS, NUTS, WASHERS SHALL BE GALVANIZED IN ACCORDANCE WITH AASHTO M 232 OR AASHTO M 298, CLASS 40 OR 50.
4. ALL EXPOSED CORNERS TO HAVE ¾" CHAMFER.
5. ALL #4 AND #5 REINFORCING BARS TO HAVE 1½" COVER. LARGER SIZES TO HAVE 2" COVER.
6. THE COMPLETE PIPE GRATE SHALL BE PAINTED IN ACCORDANCE WITH THE STANDARD SPECIFICATIONS.

TABLE OF "W" DIMENSIONS

I.D. PIPE	SKEW OF CROSS DRAIN		
	STRAIGHT	30°	45°
	"W"	"W"	"W"
24"	4'-0"	4'-0"	4'-0"
30"	4'-0"	4'-0"	4'-5"
36"	4'-0"	4'-3"	5'-3"
42"	4'-3"	4'-11"	6'-1"
48"	4'-10"	5'-7"	6'-11"

NOTE: DIMENSIONS SHOWN ABOVE ARE FOR PIPES INTERSECTING DROP INLET ON ONE SIDE ONLY. FOR SKEWED PIPES INTERSECTING BOTH SIDES OF DROP INLET, "W" WILL NEED TO BE INCREASED OR AXIS OF INTERSECTING PIPES WILL NEED TO BE SHIFTED.

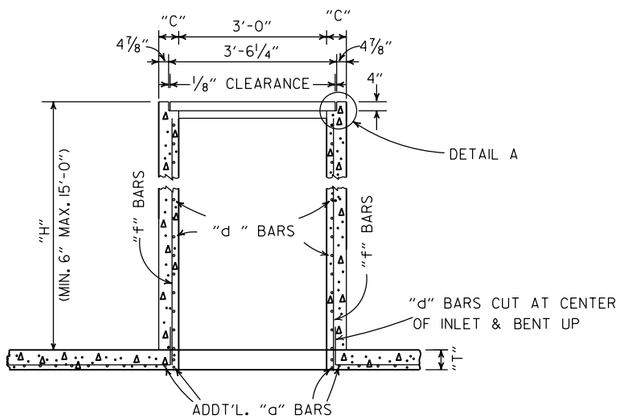

SECTION A-A

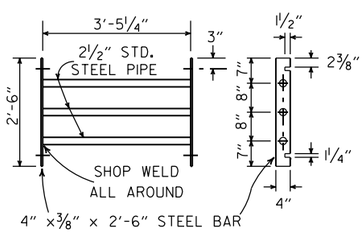

GRATE DETAIL

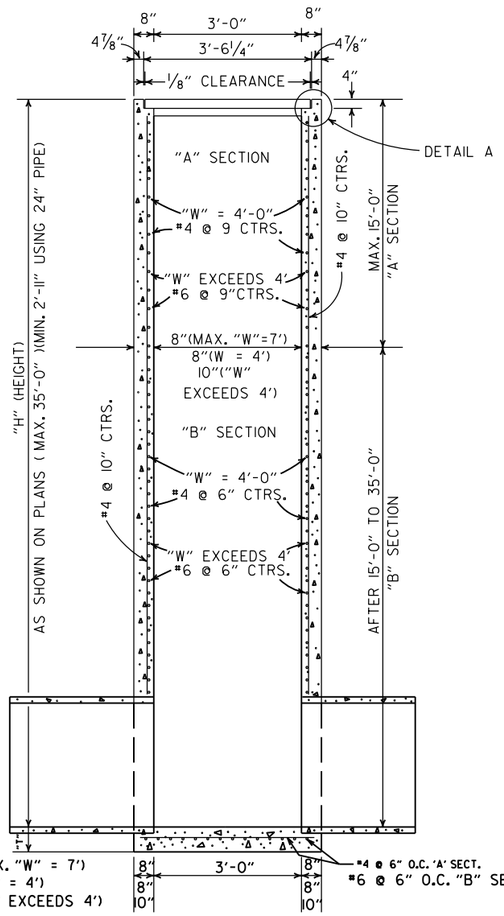

SECTION B-B

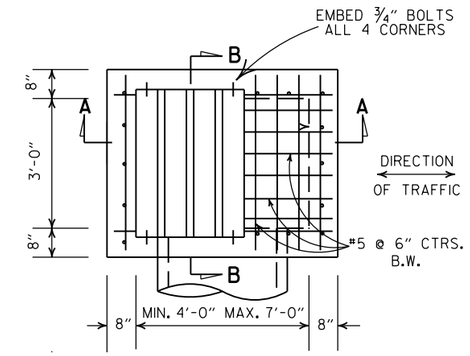

PLAN

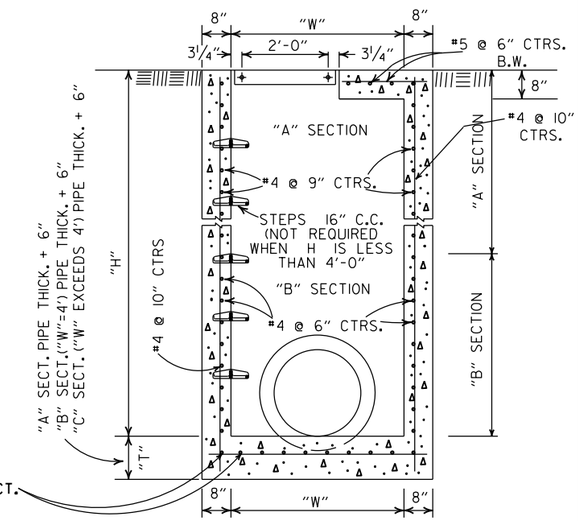

SECTION A-A

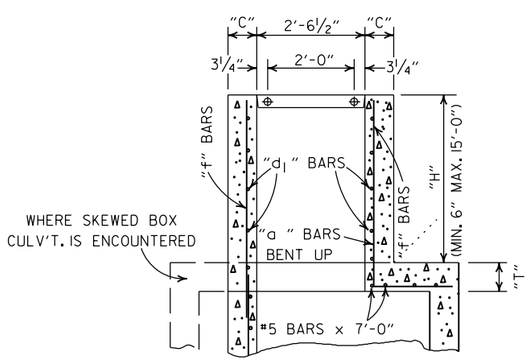

SECTION B-B

NOTE: ADDT'L.REINF. STEEL TO BE INCLUDED IN UNIT PRICE BID PER TYPE "TM" D.I.

DIMENSIONS & REINF. BARS FOR D.I. TO BE THE SAME AS THOSE SHOWN ON APPLICABLE STD. BARREL DRAWING FOR R.C. BOX CULVERTS.

DROP INLET TYPE "TM"
FOR REINFORCED CONC. BOX CULVERTS

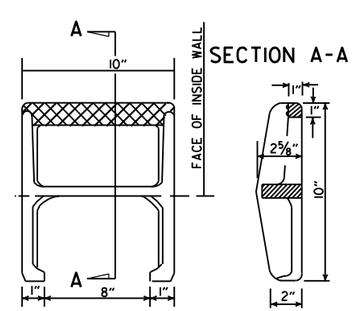

PLAN

APPROX. WEIGHT = 11 LBS. (CAST IRON)

NOTE: THIS DETAIL IS TYPICAL. OTHERS MAY BE USED WITH PRIOR APPROVAL OF THE ENGINEER.

DETAIL OF STEP FOR DROP INLET

DROP INLET(TYPE RM)

REVISED		DATE FILMED
8-22-02	ADDED & REVISED DIMENSION TO SECTION A-A	
1-12-00	CORRECTED DIMENSION ON SECTION B-B	
11-06-97	ADDED DIMENSION TO SECTION A-A	
10-18-96	REVISED ASTM REF. TO AASHTO AND ADDED NOTE TO TABLE OF "W" DIMENSIONS	
10-1-92	ADDED DIRECTION OF TRAFFIC	10-1-92
8-15-91	ADDED NOTE ABOUT PAINTING OF GRATE	8-15-91
11-30-89	ALTERED DETAIL A	11-30-89
7-15-88	REVISED STEP DETAIL,TM & RM D.I. & GRATE DETAIL	719-7-15-88
10-2-72	REVISED AND REDRAWN	542-10-2-72

ARKANSAS STATE HIGHWAY COMMISSION

DETAILS OF DROP INLETS

STANDARD DRAWING FPC-9D

NOTE: WHEN AN INLET IS PLACED ADJACENT TO CONCRETE PAVEMENT, THE GUTTER DEPRESSION SHALL BE FORMED IN CONCRETE PAVEMENT.

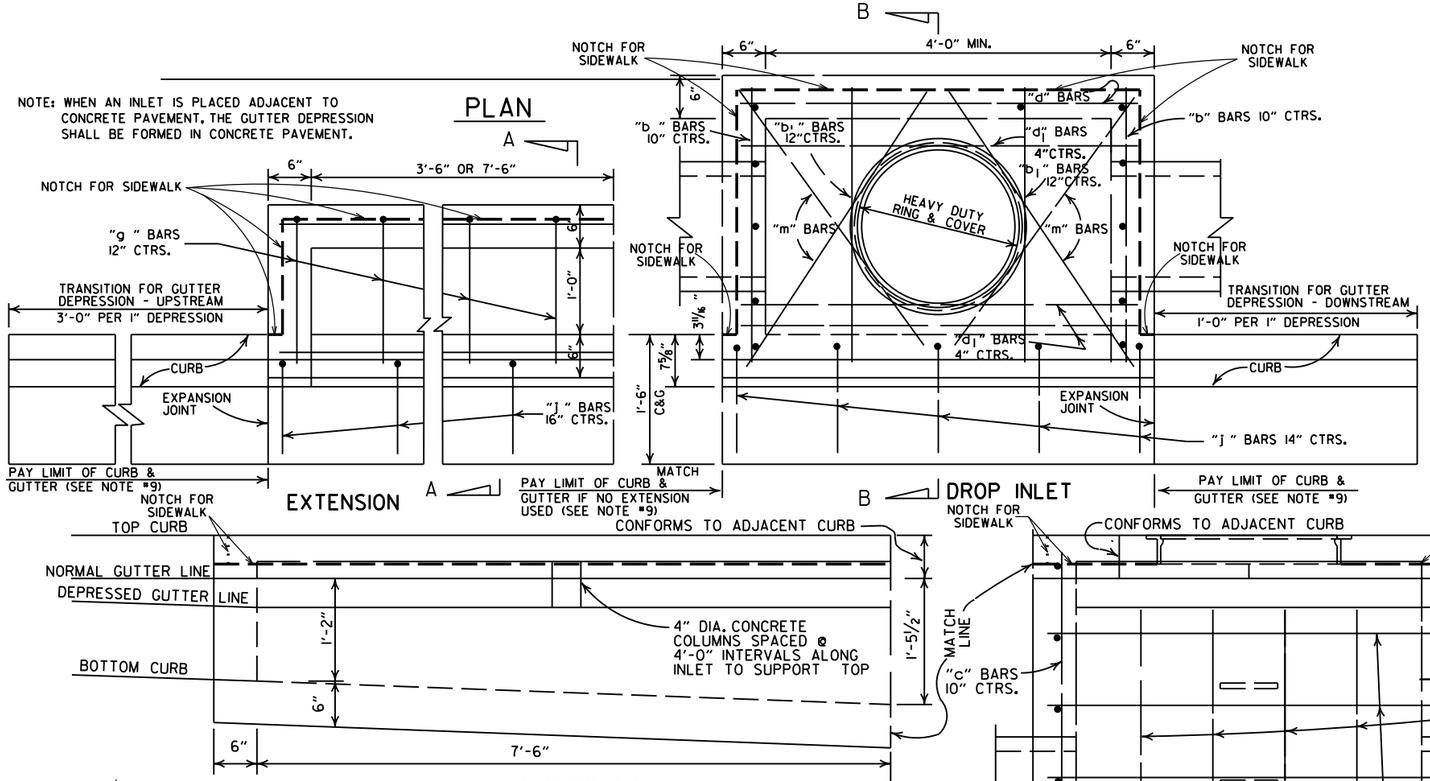

4'-0" LENGTH DROP INLET / DROP INLET EXTENSION

PIPE SIZE	MIN. WIDTH	HEIGHT 5'-0" CLASS A CONC.	HEIGHT 5'-0" REINF. STEEL	PLUS OR MINUS PER LIN. FT. OF HEIGHT CLASS A CONC.	PLUS OR MINUS PER LIN. FT. OF HEIGHT REINF. STEEL	4'-0" CLASS A CONC.	4'-0" REINF. STEEL	8'-0" CLASS A CONC.	8'-0" REINF. STEEL
		CU. YDS.	POUNDS	CU. YDS.	POUNDS	CU. YDS.	POUNDS	CU. YDS.	POUNDS
18"	2'-6"	1.77	156	0.28	22	0.58	38	0.87	72
24"	2'-6"	1.79	156	0.28	22				
30"	3'-2"	2.39	205	0.30	26				
36"	3'-8"	2.63	236	0.32	28	DEDUCT FROM QUANTITY COMPUTED FOR EACH EXTENSION ADDED.			
42"	4'-4"	2.95	250	0.34	30				
48"	4'-10"	3.21	265	0.36	32				
						0.04	3		

NOTE: QUANTITIES ARE APPROXIMATE AND ARE SHOWN FOR BIDDER INFORMATION ONLY.

DEDUCT FROM QUANTITY COMPUTED FOR EACH PIPE ENTERING INLET

INSIDE DIA. PIPE	CLASS A CONC.	REINF. STEEL
INCHES	CU. YDS.	POUNDS
18	0.05	2
24	0.09	3
30	0.13	4
42	0.24	8

BAR DIAGRAM

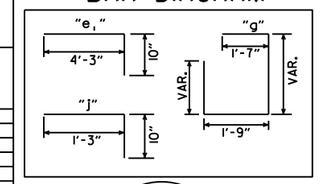

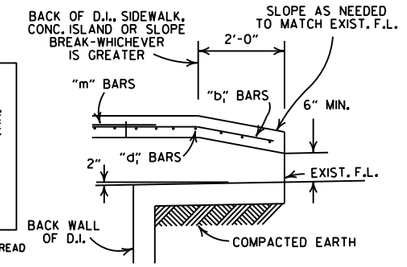

BACK OPENING

WHEN OPENING IN BACK IS CALLED FOR ON PLANS EXTEND OPENING AS SHOWN IN DETAIL. PAYMENT TO BE INCLUDED IN PRICE BID FOR DROP INLET (TYPE C).

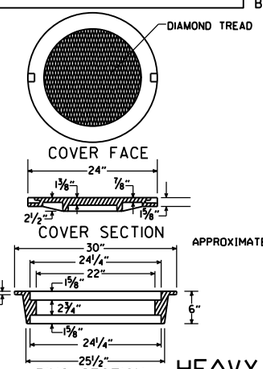

APPROXIMATE TOTAL WEIGHT = 333 LBS.

HEAVY DUTY RING & COVER

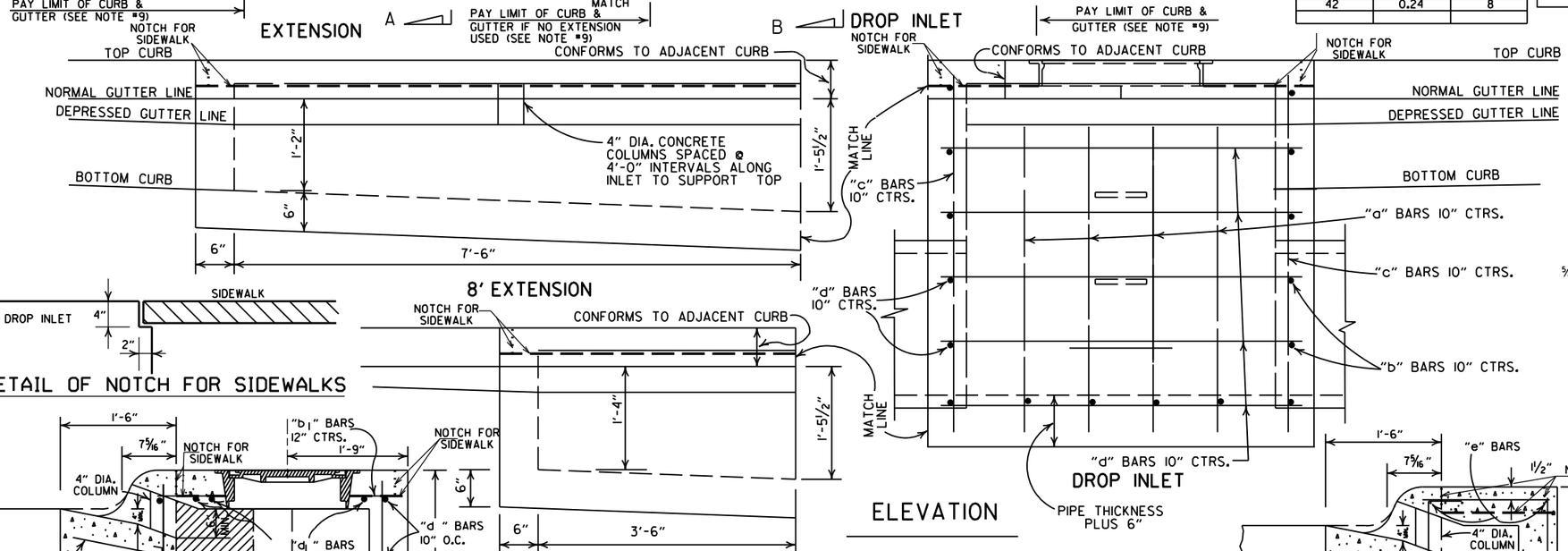

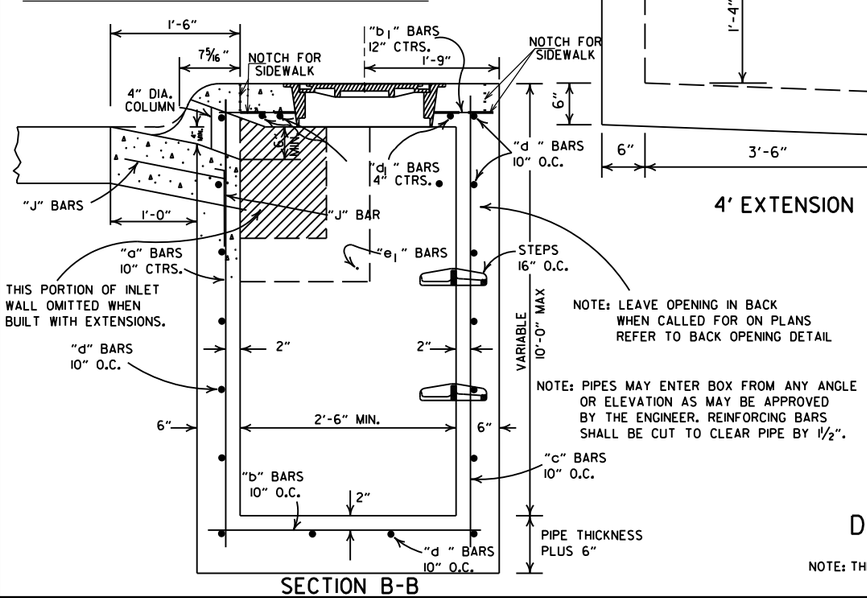

NOTE: LEAVE OPENING IN BACK WHEN CALLED FOR ON PLANS REFER TO BACK OPENING DETAIL

NOTE: PIPES MAY ENTER BOX FROM ANY ANGLE OR ELEVATION AS MAY BE APPROVED BY THE ENGINEER. REINFORCING BARS SHALL BE CUT TO CLEAR PIPE BY 1½".

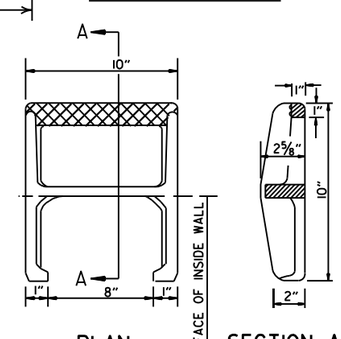

DETAIL OF STEP FOR DROP INLET

APPROX. WEIGHT = 11 LBS. (CAST IRON)

NOTE: THIS DETAIL IS TYPICAL. OTHERS MAY BE USED WITH PRIOR APPROVAL OF THE ENGINEER.

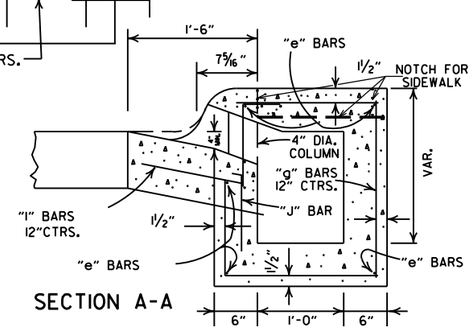

GENERAL NOTES:

1. ALL EXPOSED CORNERS TO HAVE ¾" CHAMFER.
2. STEPS SHALL BE INSTALLED IN ALL INLETS 4'-0" HIGH AND OVER OF AS APPROVED BY THE ENGINEER.
3. ALL REINF. BARS SHALL BE #4 AND HAVE 1½" COVER.
4. DROP INLETS AND EXTENSION ON CURVED SECTIONS SHALL CONFORM TO THE CURVATURE OF THE CURB.
5. THIS DROP INLET MAY BE CONSTRUCTED ON NEW OR EXISTING R.C. BOX CULVERT AS SHOWN ON F.P.C.-9.
6. WHEN PLANS CALL FOR DROP INLET OVER 10'-0" HIGH, FLOOR AND WALLS SHALL BE CONSTRUCTED AS SHOWN FOR TYPE "RM" DROP INLET (FPC-9D).
7. HEAVY DUTY RING SHALL ALWAYS BE INSTALLED WITH FLANGE ON TOP.
8. DURING CONSTRUCTION OF THE ROADWAY THE CONTRACTOR SHALL MAINTAIN DRAINAGE INTO OR AROUND THE DROP INLET AS APPROVED BY THE ENGINEER.
9. PAYMENT FOR CURB AND/OR CURB AND GUTTER WITHIN THE LIMITS OF DROP INLETS AND DROP INLET EXTENSIONS SHALL BE CONSIDERED INCLUDED IN PAYMENT MADE FOR DROP INLETS AND/OR DROP INLET EXTENSIONS.
10. HEAVY DUTY RING AND COVER SHALL BE CONSTRUCTED OF CAST IRON AND SHALL CONFORM TO THE REQUIREMENTS OF THE STANDARD SPECIFICATIONS FOR GRAY IRON CASTINGS AASHTO M105 CLASS 35B & AASHTO M306.
11. HEAVY DUTY RING AND COVER SHALL NOT BE PAINTED.
12. 4"×2" NOTCH SHALL BE FORMED IN ALL DROP INLETS TO SUPPORT SIDEWALK CONSTRUCTION. REFER TO DETAIL OF NOTCH FOR SIDEWALKS.
13. DIMENSIONS SHOWN FOR RING AND COVER ARE TYPICAL. THE CONTRACTOR MAY SUBSTITUTE SIMILAR CASTINGS WITH THE APPROVAL OF THE ENGINEER. REQUESTING APPROVAL FOR CASTING DESIGNS MAY BE MADE BY REFERRING TO PREVIOUSLY APPROVED DRAWINGS.

DATE REV.	REVISION	DATE FILMED
8-22-02	ADDED PAY LIMIT CURB NOTES TO SECTIONS A-A & B-B	
11-16-01	ADDED NOTE 13; REVISED SECTION B-B	
1-12-00	CORRECTED DIMENSION ON SECTION B-B & REVISED RING & COVER	
5-13-99	ADDED DETAIL OF NOTCH FOR SIDEWALKS	
7-02-98	REPLACED RING & COVER W/HEAVY DUTY RING & COVER ADDED NOTES 9,10,&11	
10-18-96	CORRECTED SPELLING	
4-26-96	ADDED NOTE 8 & REVISED (4')(8') EXTENSION TITLES	10-18-96
4-1-93	REVISED BACK OPENING & NOTE	
8-15-91	DELETE TYPE IV GRATE	
7-15-88	REVISED STEP DETAIL	
5-20-83	REVISED DETAILS OF GRATES (TYPE IV & IV-A)	
2-4-83	ADDED GENERAL NOTE NO. 4	
3-2-81	ADDED TYPE IV-A GRATE	
5-22-74	DELETED INLET (TYPE F) & GRATE (TYPE III)	
10-2-72	REVISED AND REDRAWN	

ARKANSAS STATE HIGHWAY COMMISSION

DETAILS OF DROP INLETS (TYPE C)

STANDARD DRAWING FPC-9E

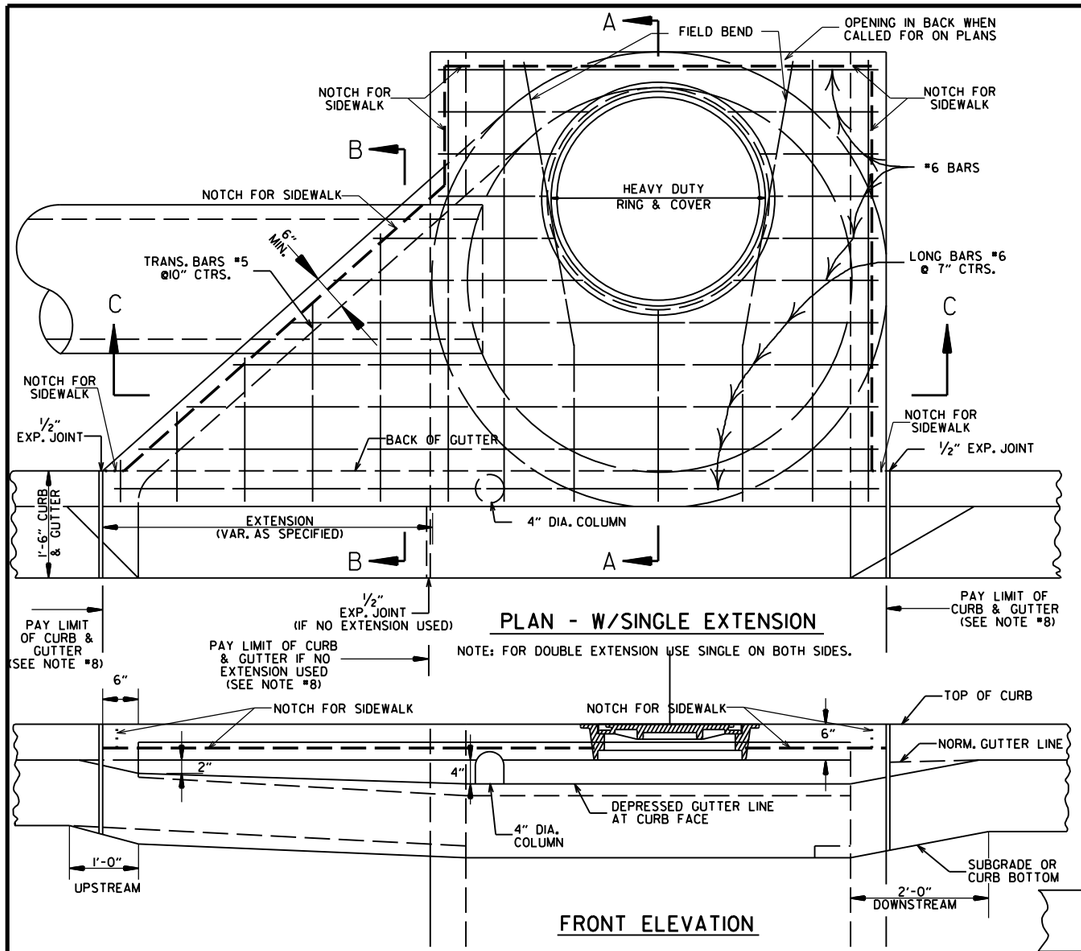

PLAN - W/SINGLE EXTENSION

NOTE: FOR DOUBLE EXTENSION USE SINGLE ON BOTH SIDES.

FRONT ELEVATION

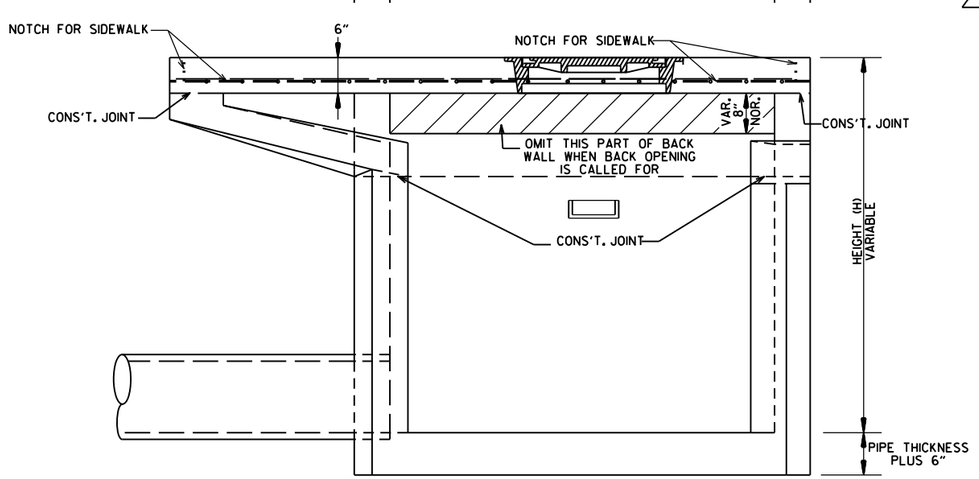

SECTION C-C

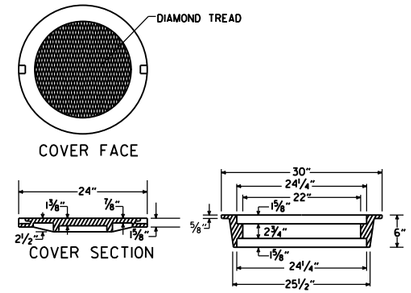

APPROXIMATE TOTAL WEIGHT = 333 LBS.

HEAVY DUTY RING & COVER

1. HEAVY DUTY RING AND COVER SHALL BE CONSTRUCTED OF CAST IRON AND SHALL CONFORM TO THE REQUIREMENTS OF THE STANDARD SPECIFICATIONS FOR GRAY IRON CASTINGS AASHTO M105 CLASS 35B & AASHTO M306.
2. HEAVY DUTY RING AND COVER SHALL NOT BE PAINTED.
3. HEAVY DUTY RING SHALL ALWAYS BE INSTALLED WITH FLANGE ON TOP.

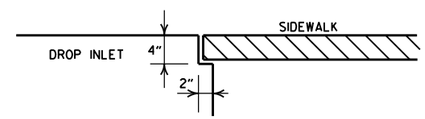

DETAIL OF NOTCH FOR SIDEWALKS

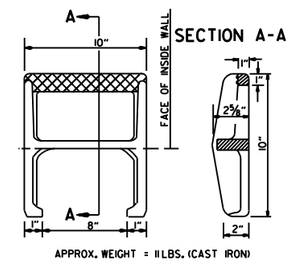

APPROX. WEIGHT = 11 LBS. (CAST IRON)

PLAN

NOTE: THIS DETAIL IS TYPICAL. OTHERS MAY BE USED WITH PRIOR APPROVAL OF THE ENGINEER.

DETAIL OF STEP FOR DROP INLET

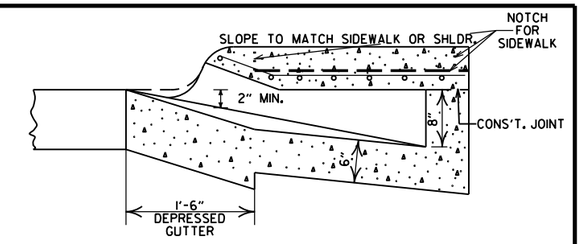

SECTION B-B

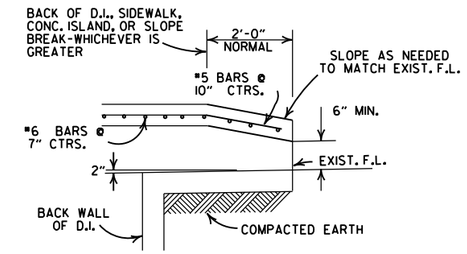

BACK OPENING

WHEN OPENING IN BACK IS CALLED FOR ON PLANS EXTEND OPENING AS SHOWN IN DETAIL. PAYMENT TO BE INCLUDED IN PRICE BID FOR DROP INLET (TYPE MO).

GENERAL NOTES:

1. ALL EXPOSED CORNERS TO HAVE 3/4" CHAMFER.
2. STEPS SHALL BE INSTALLED IN ALL INLETS 4'-0" HIGH AND OVER OR AS DIRECTED BY THE ENGINEER.
3. ALL REINFORCING BARS SHALL BE GRADE 60 AND HAVE MIN. 1 1/2" COVER.
4. DROP INLETS AND EXTENSION ON CURVED SECTIONS SHALL CONFORM TO THE CURVATURE OF THE CURB.
5. 4" DIA. COLUMNS SPACED AT MAX. 4'-0" INTERVALS SHALL BE INSTALLED ALONG INLET AND EXTENSION TO SUPPORT TOP.
6. BASE AND INLET WALLS SHALL BE CAST MONOLITHICALLY.
7. THE THROAT SHALL BE CAST INTEGRALLY WITH THE GUTTER.
8. PAYMENT FOR CURB AND/OR CURB AND GUTTER WITHIN THE LIMITS OF DROP INLETS AND DROP INLET EXTENSIONS SHALL BE CONSIDERED INCLUDED IN PAYMENT MADE FOR DROP INLETS AND/OR DROP INLET EXTENSIONS.
9. PIPES MAY ENTER DROP INLET FROM ANY ANGLE OR ELEVATION AS MAY BE APPROVED BY THE ENGINEER.
10. APPROPRIATE SIZE TYPE C DROP INLETS MAY BE SUBSTITUTED FOR TYPE MO DROP INLETS AS APPROVED BY THE ENGINEER. PAYMENT TO BE AS DROP INLET (TYPE MO).
11. DURING CONSTRUCTION OF THE ROADWAY THE CONTRACTOR SHALL MAINTAIN DRAINAGE INTO OR AROUND THE DROP INLET AS APPROVED BY THE ENGINEER.
12. 4"x2" NOTCH SHALL BE FORMED IN ALL DROP INLETS TO SUPPORT SIDEWALK CONSTRUCTION. REFER TO DETAIL OF NOTCH FOR SIDEWALKS.
13. DIMENSIONS SHOWN FOR RING AND COVER ARE TYPICAL. THE CONTRACTOR MAY SUBSTITUTE SIMILAR CASTINGS WITH THE APPROVAL OF THE ENGINEER. REQUESTING APPROVAL FOR CASTING DESIGNS MAY BE MADE BY REFERRING TO PREVIOUSLY APPROVED DRAWINGS.

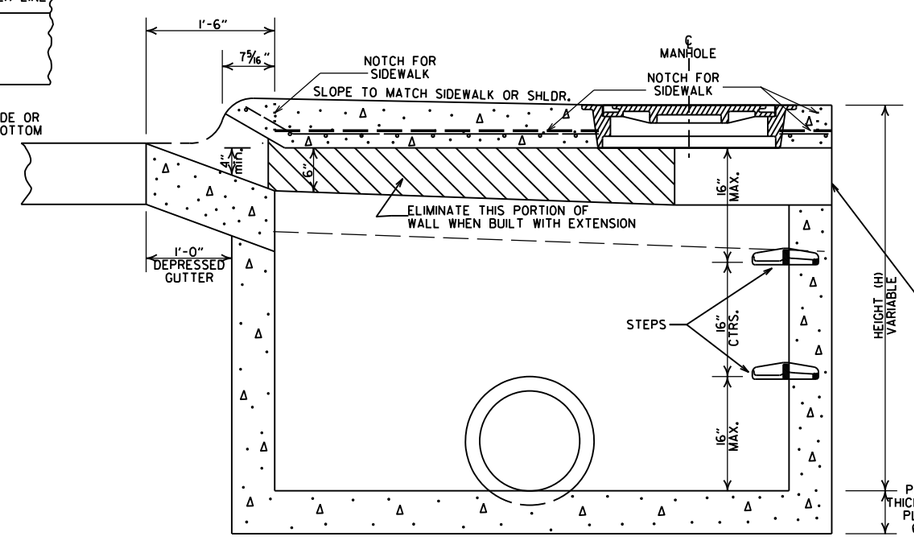

SECTION A-A

DIA. OF D.I.	DIA. OF OUTLET PIPE	MINIMUM WALL THICKNESS CAST IN PLACE	MINIMUM WALL THICKNESS PRECAST
4' I.D.	12" THRU 27"	6"	5"
5' I.D.	30" THRU 42"	8"	6"
6' I.D.	48" THRU 54"	8"	7"

DATE	REVISIONS	DATE FILMED
8-22-02	ADDED PAY LIMIT CURB NOTES TO SECTIONS A-A & B-B	
11-16-01	ADDED NOTE 13	
1-12-00	REVISED HEAVY DUTY RING & COVER	
5-13-99	ADDED NOTCH DETAIL FOR SIDEWALKS	
7-02-98	REP. NOTE 8, REM. PLAN DET., REV. PICTURE FOR NEW RING & COVER, ADDED HEAVY DUTY RING & COVER AND DETAIL OF STEP FOR DROP INLET	
4-26-96	ADDED NOTE 11, ADJ. OPENING DIMENSION	
10-12-95	CORRECTED #6 BAR SPACING	
7-20-95	CORRECTED DIAMETER OF D.I. IN BOX	
2-2-95	TYPE C TO MO (OPEN. BACK DETAIL)	
11-3-94	REVISED GENERAL NOTES	11-3-94
4-1-93	REV. BACK OPEN. DETAIL & NOTE	4-1-93
8-16-91	REVISED NOTES 1,12 & ADDED BK.OPEN DETAIL	8-15-91
11-30-89	ADDED NOTE NO. 12	11-30-89
3-23-89	ADDED NOTE & MINIMUM WALL THICKNESS	513-3-23-89
7-15-88	ADDED EXTEND NOTE TO SECTION A-A	629-7-15-88
1-14-87	MODIFIED WALL THICKNESS	783-1-14-87
6-12-87	ISSUED	4-6-12-87

ARKANSAS STATE HIGHWAY COMMISSION

DETAILS OF DROP INLET (TYPE MO)

STANDARD DRAWING FPC-9M

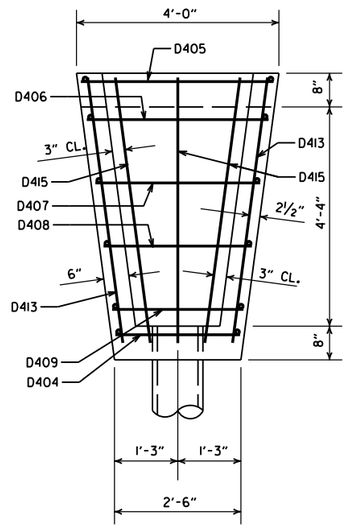

PLAN

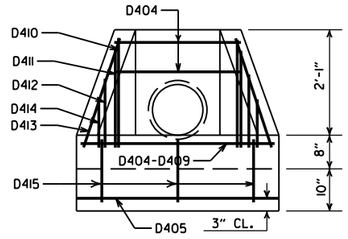

FRONT ELEVATION

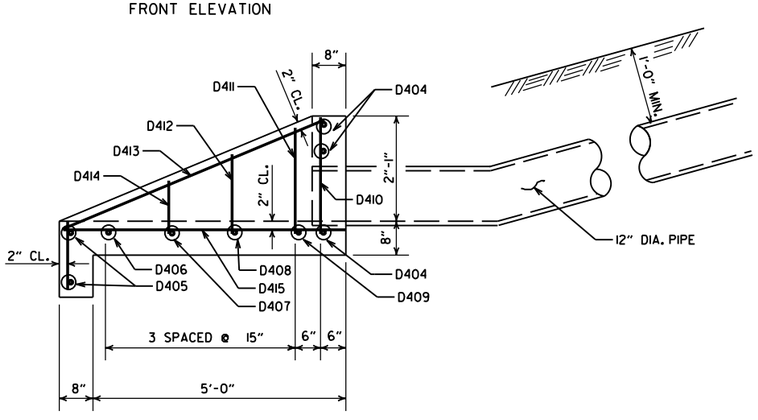

SIDE ELEVATION
CONCRETE SPILLWAY

BAR LIST (CONCRETE SPILLWAY)

MARK	NO. REQ'D.	LENGTH	BENDING DIAGRAM
D404	3	2'-2"	
D405	2	3'-8"	
D406	1	3'-5"	
D407	1	3'-1"	
D408	1	2'-9"	
D409	1	2'-5"	
D410	2	2'-5"	
D411	2	2'-2"	
D412	2	1'-9"	
D413	2	5'-6"	
D414	2	1'-2"	
D415	3	6'-5"	

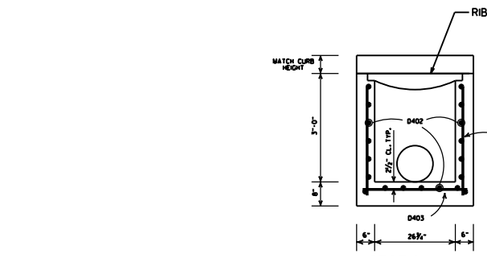

BAR LIST (DROP INLET)

MARK	TYPE N-1		TYPE N-2		TYPE N-3	
	NO. REQ'D.	LENGTH	NO. REQ'D.	LENGTH	NO. REQ'D.	LENGTH
D401	20	3'-0"	26	3'-0"	32	3'-0"
D402	19	2'-2"	19	3'-8"	19	5'-2"
D403	17	2'-11"	20	2'-11"	23	2'-11"

ALL BARS #4 @ 6" SPACING

SECTION A-A

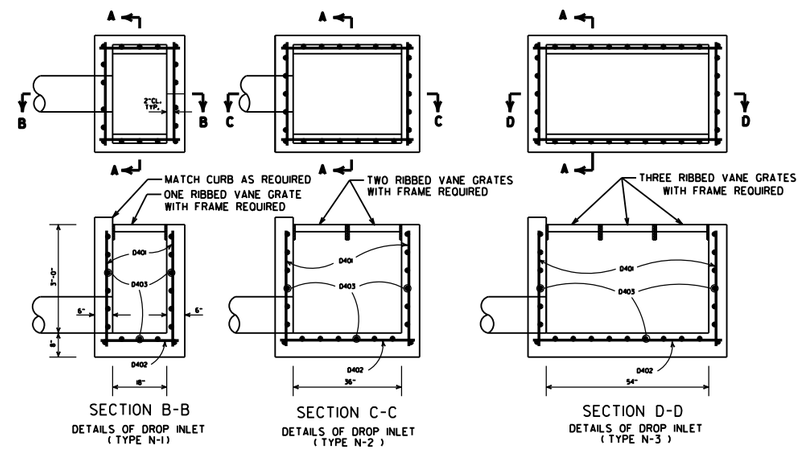

SECTION B-B
DETAILS OF DROP INLET
(TYPE N-1)

SECTION C-C
DETAILS OF DROP INLET
(TYPE N-2)

SECTION D-D
DETAILS OF DROP INLET
(TYPE N-3)

DETAILS OF DROP INLET

GENERAL NOTES (GRATE & FRAME)

1. RIBBED VANE GRATE AND FRAME SHALL BE CONSTRUCTED OF CAST IRON AND SHALL CONFORM TO THE REQUIREMENTS OF THE STANDARD SPECIFICATIONS FOR GRAY IRON CASTINGS AASHTO M 105 CLASS 35B & AASHTO M 306.
2. GRATE AND FRAME SHALL NOT BE PAINTED.
3. GRATE AND FRAME SHALL BE INSTALLED IN DROP INLET IN ASSEMBLED POSITION.
4. APPROXIMATE WEIGHT OF GRATE SHALL BE 170 LBS.

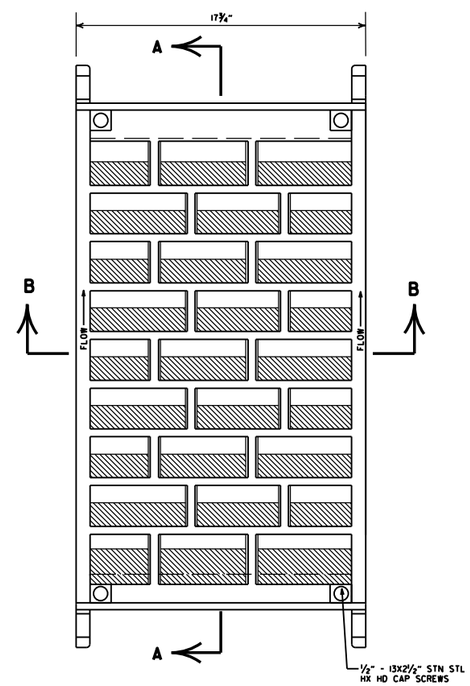

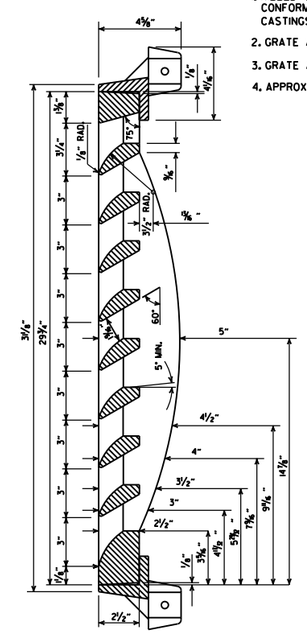

SECTION A-A

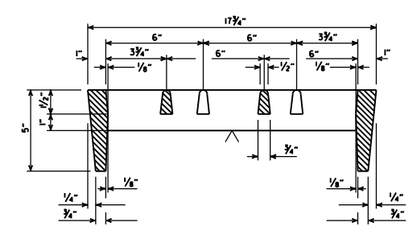

SECTION B-B

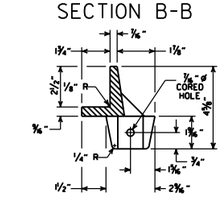

SECTION THRU FRAME

DETAILS OF RIBBED VANE GRATE AND FRAME

DATE REVISED	DATE FILMED	DESCRIPTION
7-02-98		REVISED SECT. A-A DETAIL OF DROP INLET & ADDED AASHTO REF. TO NOTE 1, REVISED GRATE
10-18-96		REVISED ASTM REF. TO AASHTO
8-15-91		ISSUED

ARKANSAS STATE HIGHWAY COMMISSION

DETAILS OF DROP INLETS AND SPILLWAY OUTLET

STANDARD DRAWING FPC-9N

DETAILS OF CONCRETE SPILLWAY (TYPE A)

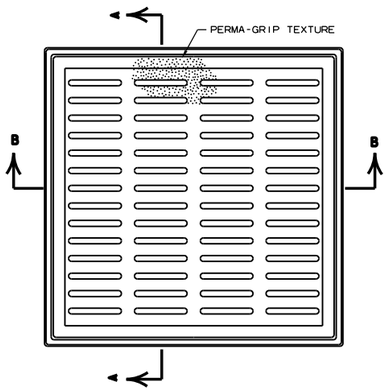

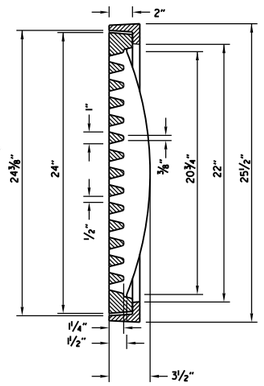

SECTION A-A

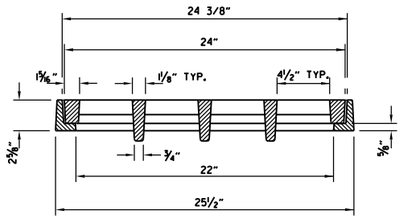

SECTION B-B

GENERAL NOTES (PEDESTRIAN GRATE & FRAME)

1. THE PEDESTRIAN GRATE SHALL BE ORIENTED IN THE TOP OF THE DROP INLET SO THAT THE ½" OPENINGS ARE PERPENDICULAR TO THE PATH OF PEDESTRIAN TRAVEL.
2. THE PEDESTRIAN GRATE AND FRAME SHALL BE CONSTRUCTED OF CAST IRON AND SHALL CONFORM TO THE REQUIREMENTS OF THE STANDARD SPECIFICATIONS FOR GRAY IRON CASTINGS AASHTO M 105, CLASS 35B, & AASHTO M 306.
3. THE GRATE AND FRAME SHALL NOT BE PAINTED.
4. THE GRATE AND FRAME SHALL BE INSTALLED IN THE DROP INLET IN THE ASSEMBLED POSITION.
5. THE APPROXIMATE WEIGHT OF THE GRATE AND FRAME SHALL BE 218 LBS.
6. THE MINIMUM WATERWAY OPENING SHALL BE 122 SQ. IN.

DETAILS OF PEDESTRIAN GRATE AND FRAME

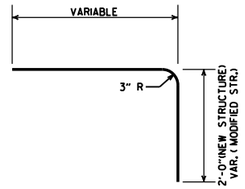

DETAIL OF BENT "b" BAR

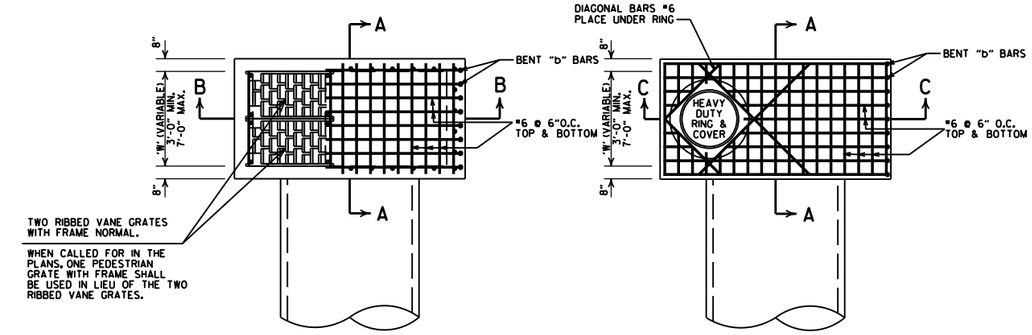

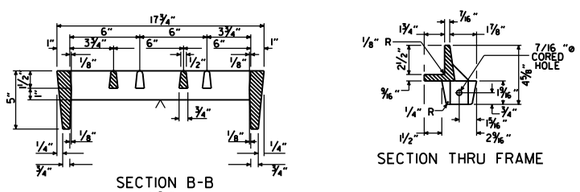

SECTION B-B

SECTION THRU FRAME

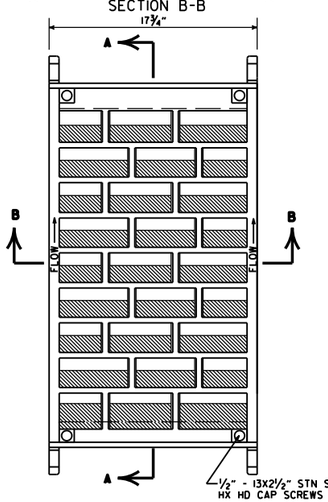

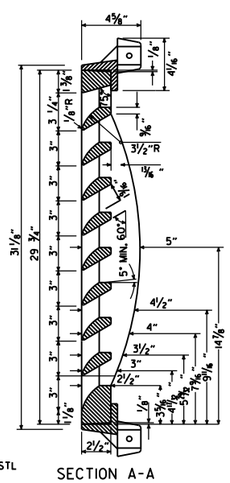

SECTION A-A

DETAILS OF RIBBED VANE GRATE AND FRAME

GENERAL NOTES (RIBBED VANE GRATE & FRAME)

1. RIBBED VANE GRATE AND FRAME SHALL BE CONSTRUCTED OF CAST IRON AND SHALL CONFORM TO THE REQUIREMENTS OF THE STANDARD SPECIFICATIONS FOR GRAY IRON CASTINGS AASHTO M 105, CLASS 35B, & AASHTO M 306.
2. GRATE AND FRAME SHALL NOT BE PAINTED.
3. GRATE AND FRAME SHALL BE INSTALLED IN DROP INLET IN ASSEMBLED POSITION.
4. APPROXIMATE WEIGHT OF GRATE SHALL BE 170 LBS.

SECTION 'A'
'V' = 8"

SECTION 'B' (W≤4'-0")
'V' = 8"

SECTION 'B' (W>4'-0")
'V' = 10"

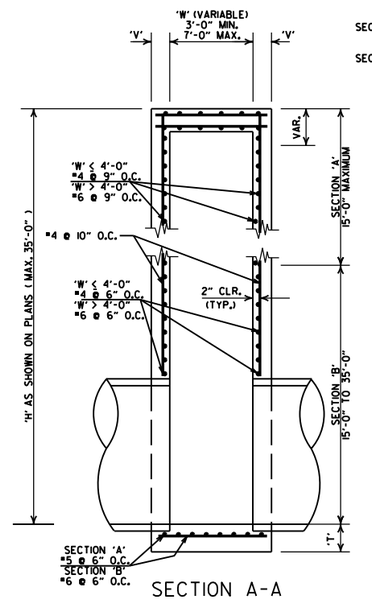

SECTION A-A

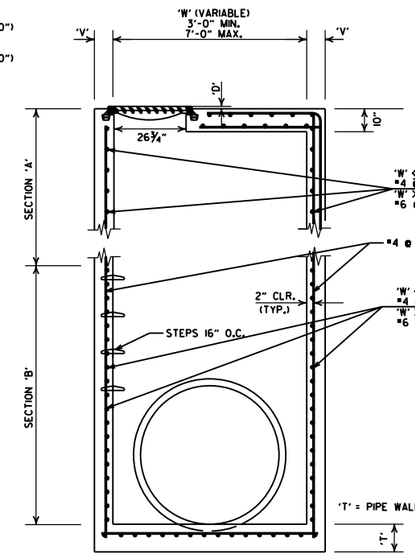

SECTION B-B

SECTION C-C

DETAILS OF JUNCTION BOX (TYPE ST)

GENERAL NOTES (TYPE ST DROP INLET & JUNCTION BOX)

1. THE 'D' DIMENSION SHALL MATCH THE FINAL LIFT OF ACHM SURFACE COURSE SHOWN IN THE PLANS WHEN ASPHALT PAVING SURROUNDS THE GRATE OR RING COVER, AND SHALL BE 0" AT OTHER INSTALLATIONS.
2. THE STEPS SHALL BE OMITTED WHERE 'H' IS LESS THAN 4'-0".
3. ALL EXPOSED CORNERS ARE TO HAVE A ¾" CHAMFER.

DETAILS OF DROP INLET (TYPE ST)

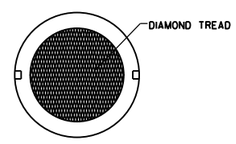

COVER FACE

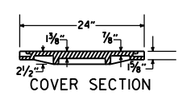

COVER SECTION

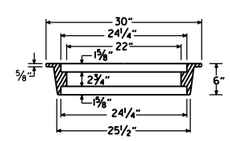

RING SECTION

HEAVY DUTY RING & COVER

APPROXIMATE TOTAL WEIGHT = 333 LBS.

GENERAL NOTES (HEAVY DUTY RING & COVER):

1. HEAVY DUTY RING AND COVER SHALL BE CONSTRUCTED OF CAST IRON AND SHALL CONFORM TO THE REQUIREMENTS OF THE STANDARD SPECIFICATIONS FOR GRAY IRON CASTINGS AASHTO M 105, CLASS 35B, & AASHTO M 306.
2. HEAVY DUTY RING AND COVER SHALL NOT BE PAINTED.
3. HEAVY DUTY RING SHALL ALWAYS BE INSTALLED WITH FLANGE ON TOP.
4. DIMENSIONS SHOWN FOR RING AND COVER ARE TYPICAL. THE CONTRACTOR MAY SUBSTITUTE SIMILAR CASTINGS WITH THE APPROVAL OF THE ENGINEER, REQUESTING APPROVAL FOR CASTING DESIGNS MAY BE MADE BY REFERRING TO PREVIOUSLY APPROVED DRAWINGS.

DATE REVISED	DATE FILMED	DESCRIPTION
7-26-12		REMOVED NOTE 4, REVISED 'T', REVISED BOTTOM SLAB REBAR FOR SECTION 'A', SHOWED REBAR CLEARANCE IN SECTIONS
11-16-01		ADDED NOTE 4
1-12-00		REVISED HEAVY DUTY RING & COVER
5-13-99		ADDED PEDESTRIAN FRAME & GRATE
7-02-98		REMOVED NOTE 5, REV. DIMENSIONS, ADDED HEAVY DUTY RING & COVER ADDED AASHTO REF. REVISED GRATE
10-18-96		REVISED ASTM REF. TO AASHTO
10-1-92		REVISED & REISSUED
8-15-91	8-15-91	REVISED & REISSUED

ARKANSAS STATE HIGHWAY COMMISSION

DETAILS OF DROP INLET & JUNCTION BOX (TYPE ST)

STANDARD DRAWING FPC-9S

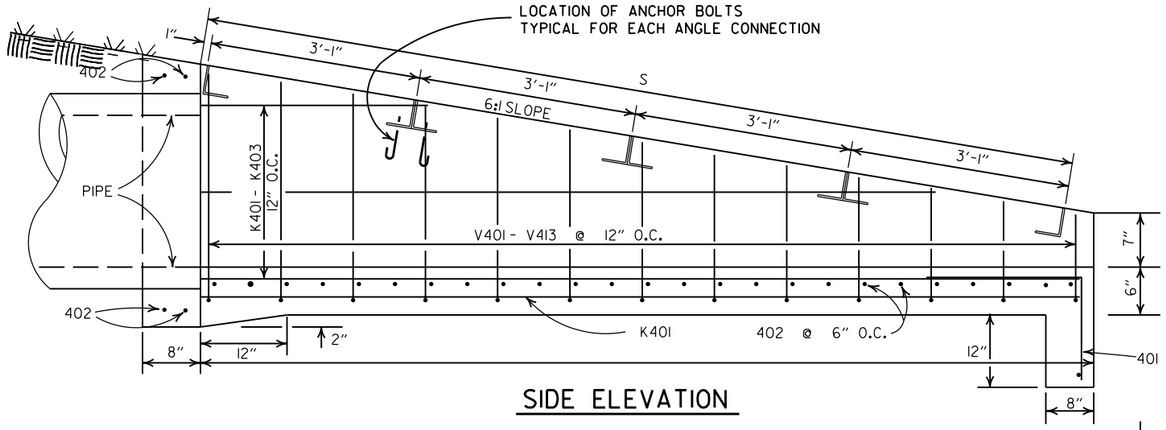

SIDE ELEVATION

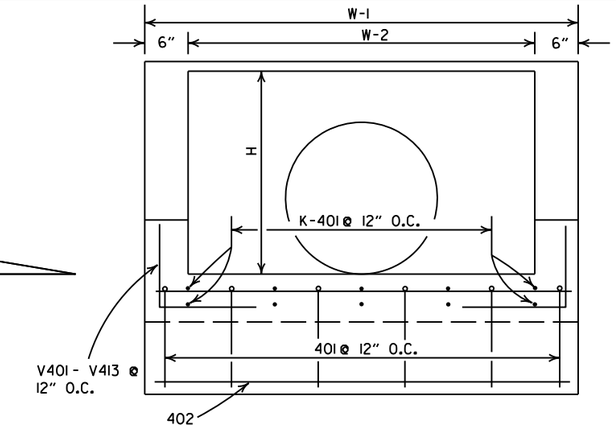

END ELEVATION

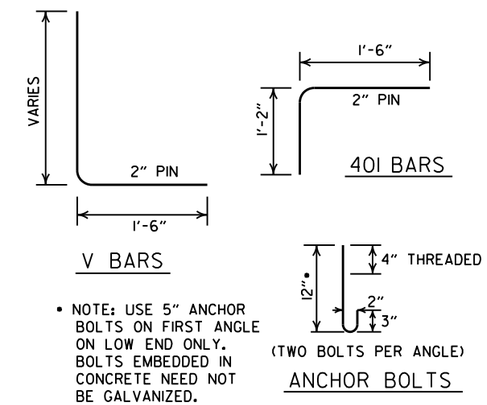

• NOTE: USE 5" ANCHOR BOLTS ON FIRST ANGLE ON LOW END ONLY. BOLTS EMBEDDED IN CONCRETE NEED NOT BE GALVANIZED.

BENDING DIAGRAM

(DIMENSIONS ARE OUTSIDE TO OUTSIDE)

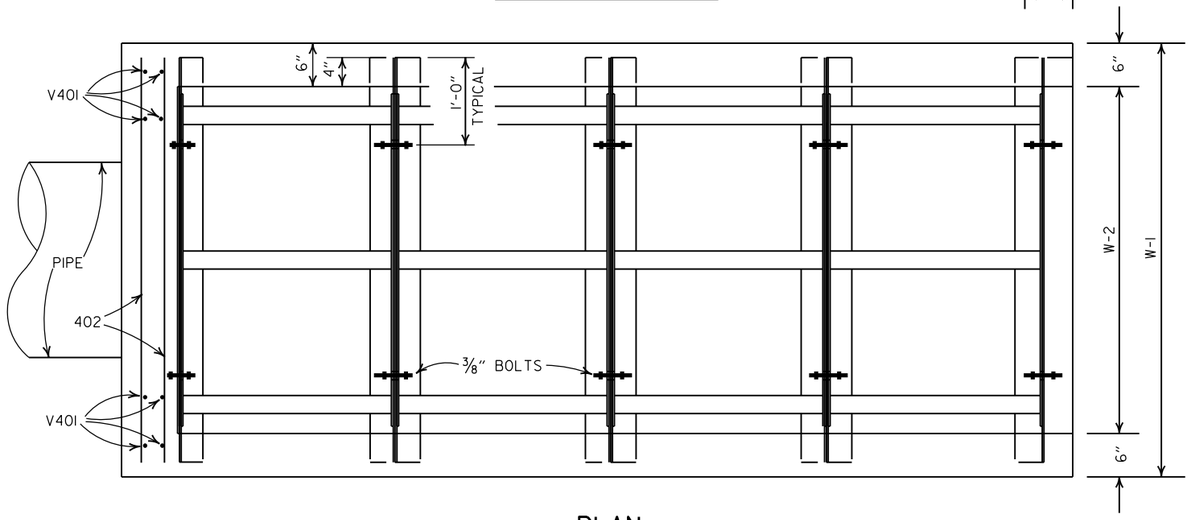

PLAN

QUANTITIES & DIMENSIONS - ONE GRATE COMPLETE

PIPE DIA.	W - 1	W - 2	L	S	H	PANEL SIZE	NUMBER OF PANELS	ANGLE DIMEN. D	APPROX. CONC. QUANT. CU. YDS.
24"	5'-0"	4'-0"	12'-6"	12'-8"	2'-8"	2'-11½" x 3'-10"	4	4" x 3½" x⅜"	2.35
30"	5'-0"	4'-0"	15'-6"	15'-8½"	3'-2"	2'-11½" x 3'-10"	5	4" x 3½" x⅜"	3.09
18"	5'-0"	4'-0"	9'-6"	9'-7½"	2'-2"	2'-11½" x 3'-10"	3	4" x 3½" x⅜"	1.77

BAR LISTS - ONE HEADWALL

24" PIPE

MRK	LENGTH	NO.
401	2'-8"	6
402	4'-8"	30
K401	12'-2"	10
K402	10'-3"	2
K403	4'-3"	2
V401	4'-5"	10
V402	4'-1"	2
V403	3'-11"	2
V404	3'-9"	2
V405	3'-7"	2
V406	3'-5"	2
V407	3'-3"	2
V408	3'-1"	2
V409	2'-11"	2
V410	2'-9"	2
V411	2'-7"	2
V412	2'-5"	2
V413	2'-3"	2

30" PIPE

MRK	LENGTH	NO.
401	2'-8"	6
402	4'-8"	36
K401	15'-2"	10
K402	13'-3"	2
K403	7'-3"	2
K404	1'-3"	2
V401	4'-11"	10
V402	4'-7"	2
V403	4'-5"	2
V404	4'-3"	2
V405	4'-1"	2
V406	3'-11"	2
V407	3'-9"	2
V408	3'-7"	2
V409	3'-5"	2
V410	3'-3"	2
V411	3'-1"	
V412	2'-11"	
V413	2'-9"	
V414	2'-7"	
V415	2'-5"	
V416	2'-3"	

18" PIPE

MARK	LENGTH	NO.
401	2'-8"	6
402	4'-8"	24
K401	9'-2"	10
K402	7'-3"	2
K403	1'-3"	2
V401	3'-11"	10
V402	3'-7"	2
V403	3'-5"	2
V404	3'-3"	2
V405	3'-1"	2
V406	2'-11"	2
V407	2'-9"	2
V408	2'-7"	2
V409	2'-5"	2
V410	2'-3"	2

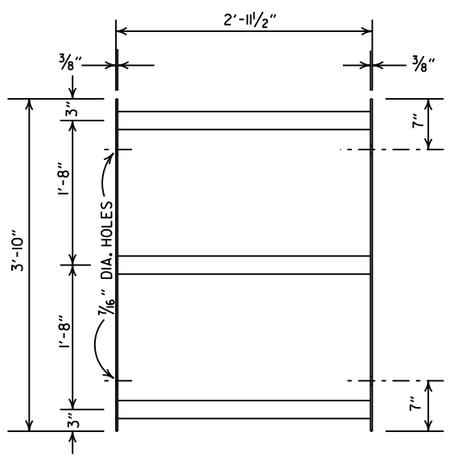

STANDARD GRATE PANEL

NOTE: 2½" STANDARD STEEL PIPE TO BE VENTED FOR GALVANIZING.

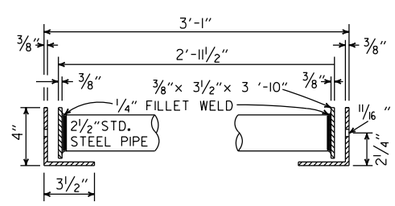

TYPICAL SECTION

FURNISH WASHERS WITH BOLTS

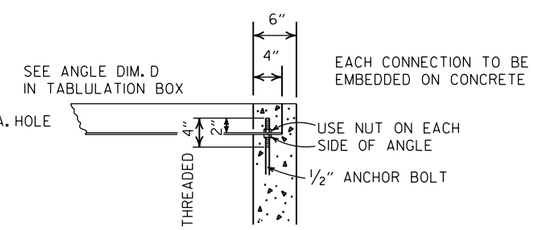

DETAIL OF ANGLE CONNECTION

DATE	REVISION	DATE FILMED
8-15-91	REVISED GRATE PANEL	8-15-91
2-16-89	ADDED (TYPE I) TO TITLE	581-2-16-89
7-15-88	CHANGED TITLE	641-7-15-88
2-18-75	ADDED QTYS. & DIMENSIONS FOR 18" PIPE	985-2-18-75
10-2-72	REVISED & REDRAWN	761-10-2-72

ARKANSAS STATE HIGHWAY COMMISSION

STEEL GRATE ASSEMBLY
(TYPE I)

STANDARD DRAWING G-1

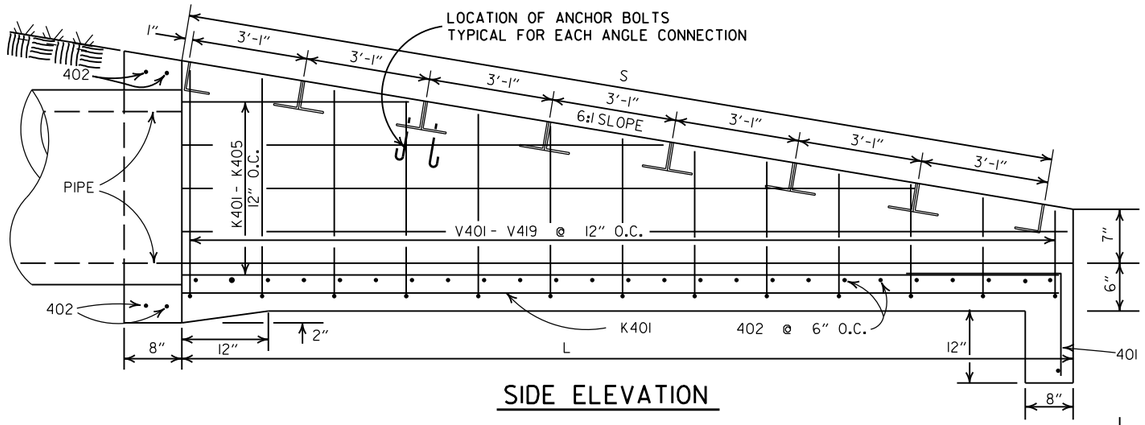

SIDE ELEVATION

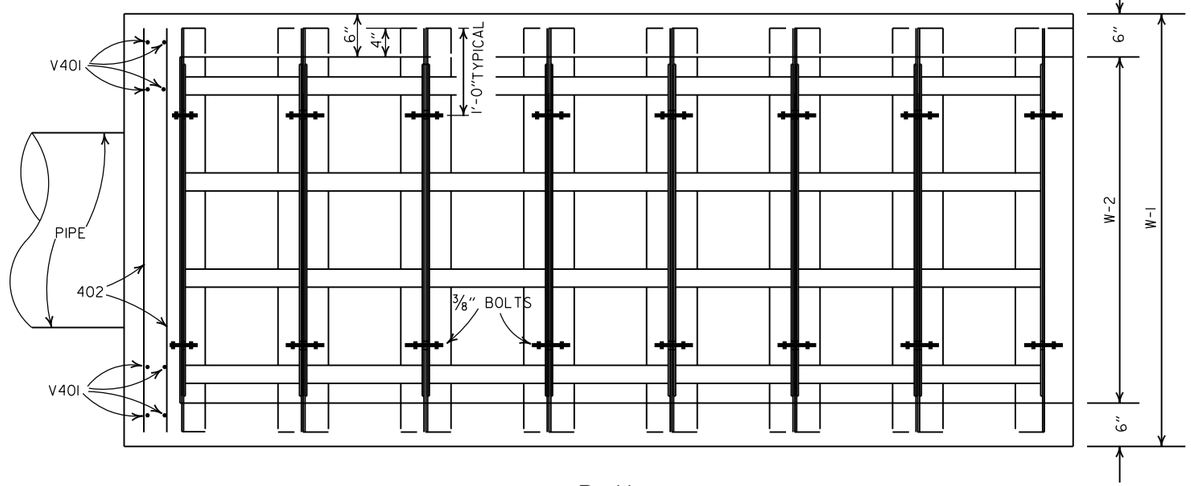

PLAN

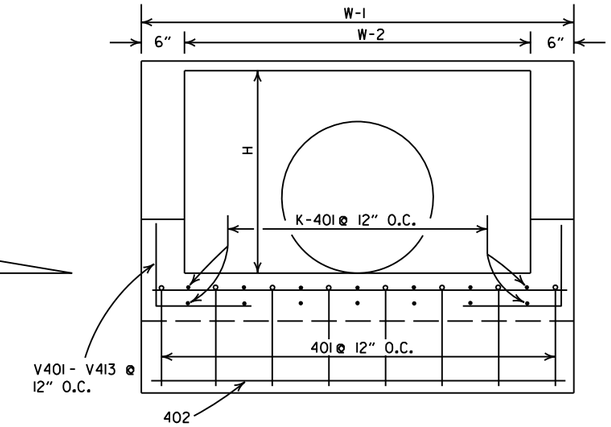

END ELEVATION

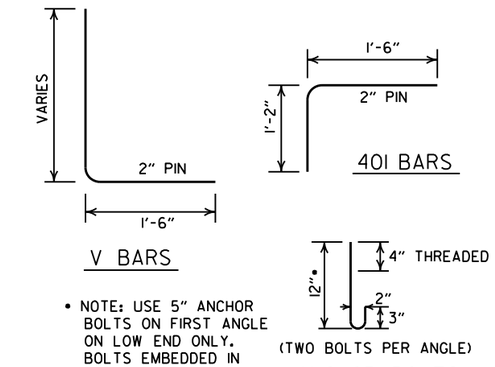

• NOTE: USE 5" ANCHOR BOLTS ON FIRST ANGLE ON LOW END ONLY. BOLTS EMBEDDED IN CONCRETE NEED NOT BE GALVANIZED.

BENDING DIAGRAM

(DIMENSIONS ARE OUTSIDE TO OUTSIDE)

QUANTITIES & DIMENSIONS - ONE GRATE COMPLETE

PIPE DIA.	W - 1	W - 2	L	S	H	PANEL SIZE	NUMBER OF PANELS	ANGLE DIMEN. D	APPROX. CONC. QUANT. CU. YDS.
36"	7'-0"	6'-0"	18'-6"	18'-9"	3'-8"	2'-11½"x 5'-10"	6	4" x 4" x⅜"	4.55
42"	7'-0"	6'-0"	21'-7"	21'-10½"	4'-2"	2'-11½"x 5'-10"	7	4" x 4" x⅜"	5.37
48"	7'-0"	6'-0"	24'-8"	25'-0 "	4'-8"	2'-11½"x 5'-10"	8	4" x 4" x⅜"	6.23

BAR LISTS - ONE HEADWALL

36" PIPE

MARK	LENGTH	NO.
401	2'-8"	8
402	6'-8"	42
K401	18'-2"	14
K402	10'-3"	2
K403	16'-3"	2
K404	4'-3"	2
V401	5'-5"	10
V402	5'-1"	2
V403	4'-11"	2
V404	4'-9"	2
V405	4'-7"	2
V406	4'-5"	2
V407	4'-3"	2
V408	4'-1"	2
V409	3'-11"	2
V410	3'-9"	2
V411	3'-7"	2
V412	3'-5"	2
V413	3'-3"	2
V414	3'-1"	2
V415	2'-11"	2
V416	2'-9"	2
V417	2'-7"	2
V418	2'-5"	2
V419	2'-3"	2

42" PIPE

MARK	LENGTH	NO.
401	2'-8"	8
402	6'-8"	48
K401	21'-3"	14
K402	19'-3"	2
K403	13'-3"	2
K404	7'-3"	2
K405	1'-3"	2
V401	5'-11"	10
V402	5'-7"	2
V403	5'-5"	2
V404	5'-3"	2
V405	5'-1"	2
V406	4'-11"	2
V407	4'-9"	2
V408	4'-7"	2
V409	4'-5"	2
V410	4'-3"	2
V411	4'-1"	2
V412	3'-11"	2
V413	3'-9"	2
V414	3'-7"	2
V415	3'-5"	2
V416	3'-3"	2
V417	3'-1"	2
V418	2'-11"	2
V419	2'-9"	2
V420	2'-7"	2
V421	2'-5"	2
V422	2'-3"	2

48" PIPE

MARK	LENGTH	NO.
401	2'-8"	8
402	6'-8"	54
K401	24'-4"	14
K402	22'-3"	2
K403	16'-3"	2
K404	10'-3"	2
K405	4'-3"	2
V401	6'-5"	10
V402	6'-1"	2
V403	5'-11"	2
V404	5'-9"	2
V405	5'-7"	2
V406	5'-5"	2
V407	5'-3"	2
V408	5'-1"	2
V409	4'-11"	2
V410	4'-9"	2
V411	4'-7"	2
V412	4'-5"	2
V413	4'-3"	2
V414	4'-1"	2
V415	3'-11"	2
V416	3'-9"	2
V417	3'-7"	2
V418	3'-5"	2
V419	3'-3"	2
V420	3'-1"	2
V421	2'-11"	2
V422	2'-9"	2
V423	2'-7"	2
V424	2'-5"	2
V425	2'-3"	2

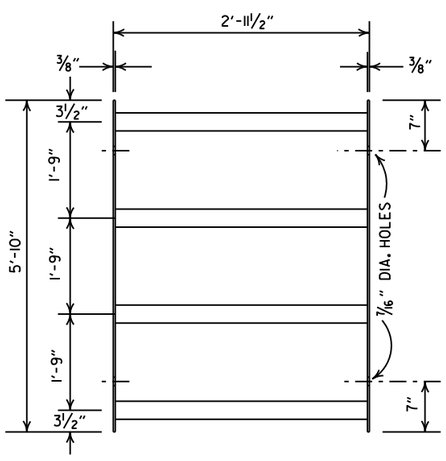

STANDARD GRATE PANEL

NOTE: 2½" STANDARD STEEL PIPE TO BE VENTED FOR GALVANIZING.

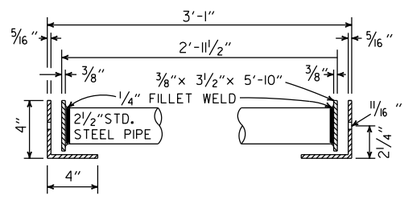

TYPICAL SECTION

FURNISH WASHERS WITH BOLTS

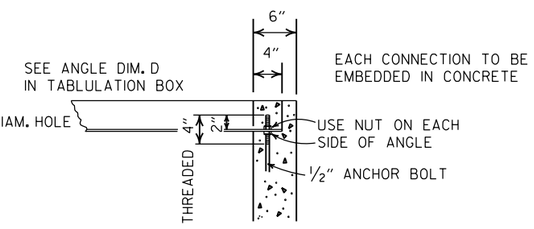

DETAIL OF ANGLE CONNECTION

DATE	REVISION	DATE FILMED
8-15-91	REVISED GRATE PANEL	8-15-91
2-16-89	ADDED (TYPE I) TO TITLE	582-2-16-89
7-15-88	CHANGED TITLE	642-7-15-88
5-22-74	W-1 & W-2 CORRECTED ON PLAN VIEW	568-5-22-74
11-1-73	ADDED NOTE RE: WASHER AT TYP. SECT.	504-11-1-73
10-2-72	REVISED & REDRAWN	761-10-2-72

ARKANSAS STATE HIGHWAY COMMISSION

STEEL GRATE ASSEMBLY
(TYPE I)

STANDARD DRAWING G-2

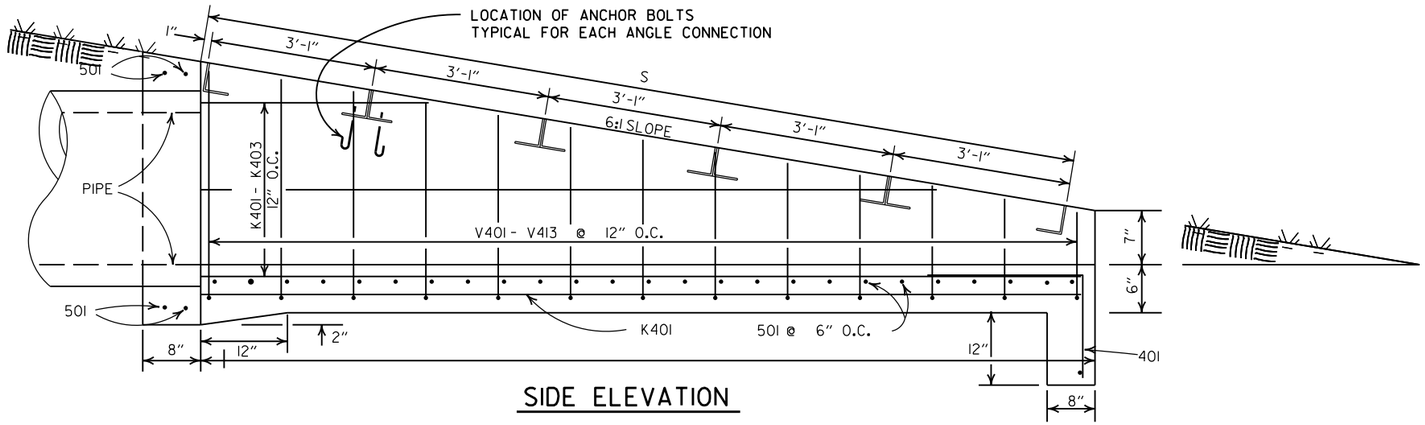

SIDE ELEVATION

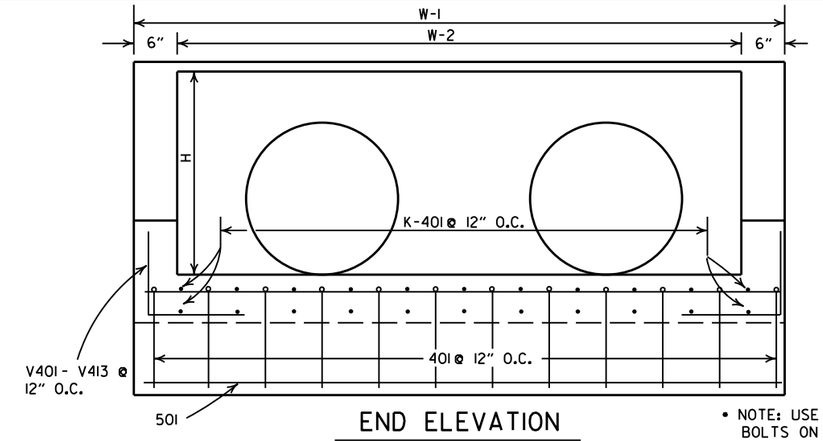

END ELEVATION

• NOTE: USE 5" ANCHOR BOLTS ON FIRST ANGLE ON LOW END ONLY. BOLTS EMBEDDED IN CONCRETE NEED NOT BE GALVANIZED.

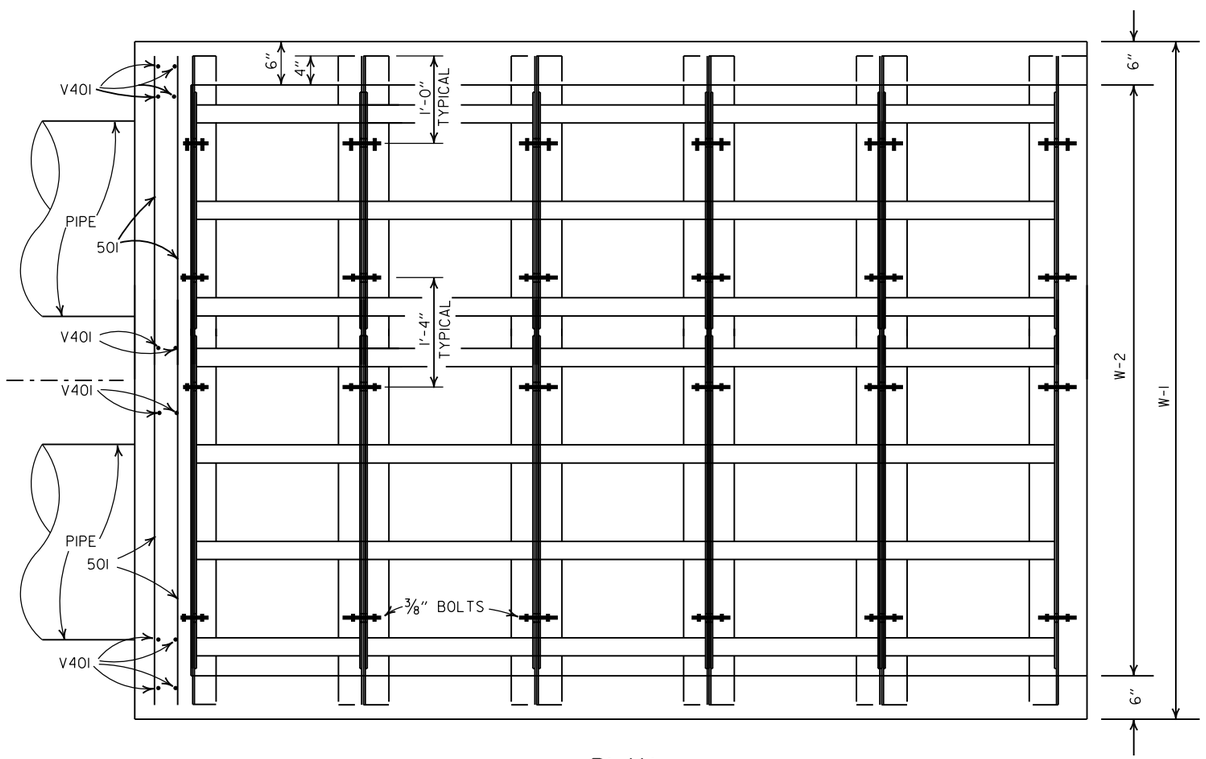

PLAN

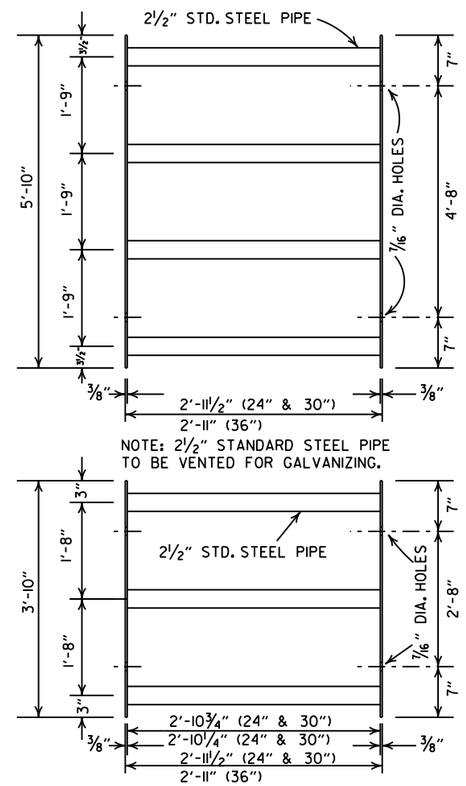

STANDARD GRATE PANEL

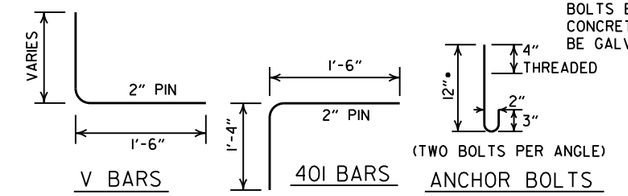

BENDING DIAGRAM

(DIMENSIONS ARE OUTSIDE TO OUTSIDE)

QUANTITIES & DIMENSIONS - ONE GRATE COMPLETE

PIPE DIA.	W - 1	W - 2	L	S	H	PANEL SIZE	NUMBER OF PANELS	ANGLE DIMEN. D	APPROX. CONC. QUANT. CU. YDS.
DBL. 24"	9'-0"	8'-0"	12'-6"	12'-8"	2'-8"	2'-11½"x 3'-10"	8	4" x 4" x⅜"	4.30
DBL. 30"	11'-0"	10'-0"	15'-6"	15'-8½"	3'-2"	2'-11½"x 3'-10"	5	4" x 4" x⅜"	6.29
						2'-11½"x 5'-10"	5		
DBL. 36"	13'-0"	12'-0"	18'-6"	18'-9 "	3'-8"	2'-11½"x 5'-10"	12	4" x 4" x⅝"	8.70

BAR LISTS - ONE HEADWALL

DBL. 24" PIPE

MARK	LENGTH	NO.
401	2'-10"	10
501	8'-8"	30
K401	12'-2"	18
K402	10'-3"	2
K403	4'-3"	2
V401	5'-1"	14
V402	4'-9"	2
V403	4'-7"	2
V404	4'-5"	2
V405	4'-3"	2
V406	4'-1"	2
V407	3'-11"	2
V408	3'-9"	2
V409	3'-7"	2
V410	3'-5"	2
V411	3'-3"	2
V412	3'-1"	2
V413	2'-11"	2

DBL. 30" PIPE

MARK	LENGTH	NO.
401	2'-10"	12
501	10'-8"	36
K401	15'-2"	22
K402	13'-3"	2
K403	7'-3"	2
K404	1'-3"	2
V401	5'-7"	14
V402	5'-3"	2
V403	5'-1"	2
V404	4'-11"	2
V405	4'-9"	2
V406	4'-7"	2
V407	4'-5"	2
V408	4'-3"	2
V409	4'-1"	2
V410	3'-11"	2
V411	3'-9"	2
V412	3'-7"	2
V413	3'-5"	2
V414	3'-3"	2
V415	3'-1"	2
V416	2'-11"	2

DBL. 36" PIPE

MARK	LENGTH	NO.
401	2'-10"	12
601	12'-8"	42
K401	18'-2"	26
K402	16'-3"	2
K403	10'-3"	2
K404	4'-3"	2
V401	6'-1"	14
V402	5'-9"	2
V403	5'-7"	2
V404	5'-5"	2
V405	5'-3"	2
V406	5'-1"	2
V407	4'-11"	2
V408	4'-9"	2
V409	4'-7"	2
V410	4'-5"	2
V411	4'-3"	2
V412	4'-1"	2
V413	3'-11"	2
V414	3'-9"	2
V415	3'-7"	2
V416	3'-5"	2
V417	3'-3"	2
V418	3'-1"	2
V419	2'-11"	2

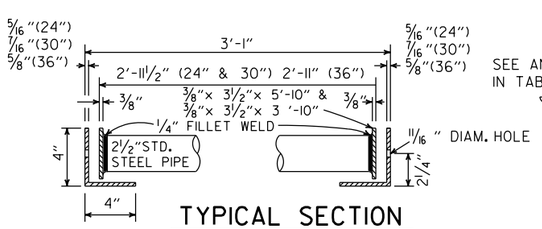

TYPICAL SECTION

FURNISH WASHERS WITH BOLTS

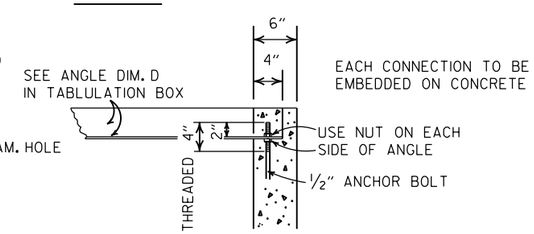

DETAIL OF ANGLE CONNECTION

DATE	REVISION	DATE FILMED
8-15-91	REVISED GRATE PANEL	8-15-91
2-16-89	ADDED (TYPE I) TO TITLE	583-2-16-89
7-15-88	CHANGED TITLE	643-7-15-88
10-2-72	REVISED & REDRAWN	761-10-2-72

ARKANSAS STATE HIGHWAY COMMISSION

STEEL GRATE ASSEMBLY
(TYPE I)

STANDARD DRAWING G-3

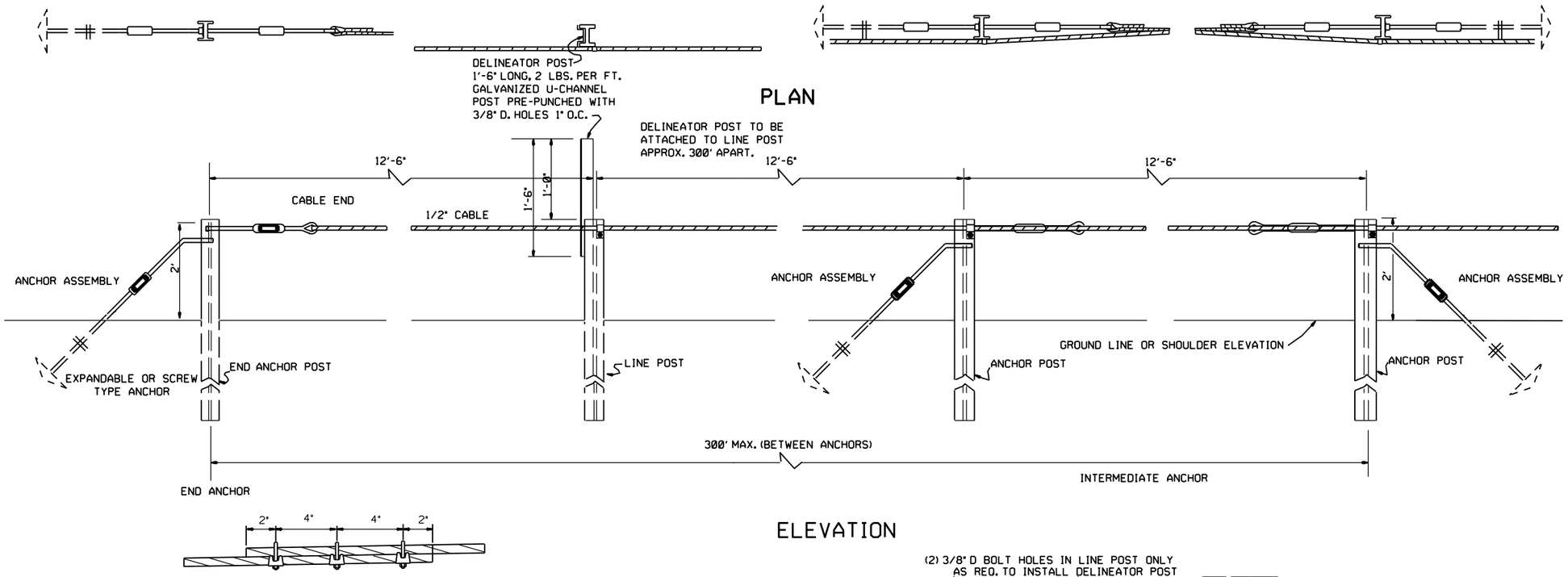

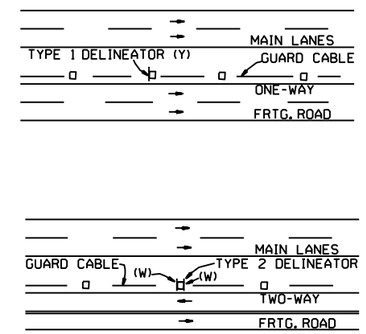

DELINEATOR PLACEMENT

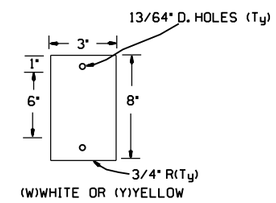

NOTE: DELINEATORS ARE TO BE MOUNTED TO POST USING PIN AND COLLAR (FASTENERS) WHICH ARE 6061 ALUMINUM ALLOY. PIN LENGTH SHOULD NOT EXTEND FURTHER THAN 1/8" PAST THE COLLAR.
TYPE 2 DELINEATOR CONSIST OF 2 REFLECTORS MOUNTED BACK-TO-BACK ON A SINGLE POST.

TYPE 1 & 2 DELINEATORS

ONLY ONE SPLICE PERMITTED BETWEEN ANCHORS, LOCATED BETWEEN LINE POSTS ONLY. SPLICES WILL NOT BE PERMITTED IN SPANS ADJACENT TO THE ANCHOR AND CABLE END ASSEMBLIES. GUARD CABLE GREATER THAN 300 FEET IN LENGTH REQUIRES AN INTERMEDIATE ANCHOR AS SHOWN.

SPLICE DETAIL

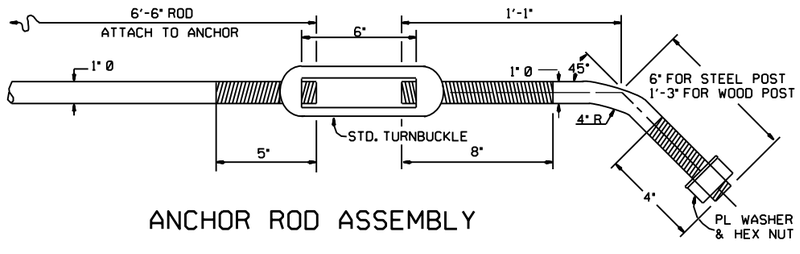

ANCHOR ROD ASSEMBLY

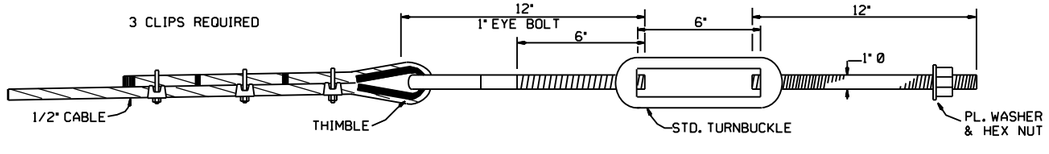

CABLE END

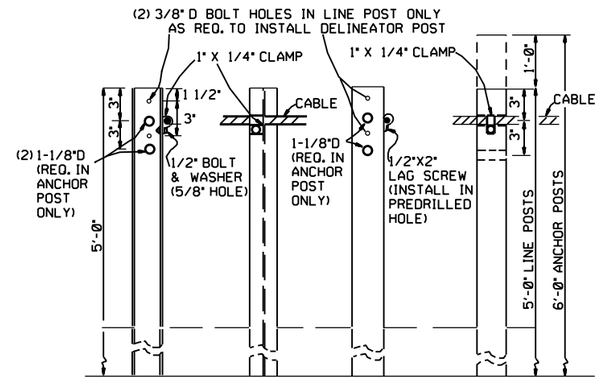

STEEL POST

S 3 X 5.7 OR
WELDED BEAM CONSTRUCTION (ASTM A769)

WOOD POST

3 1/2"X3 1/2" SQUARE (4X4 NOMINAL) OR 4" ROUND SOUTHERN PINE INSPECTION BUREAU, TIMBER, NO. 1 1350 f SOUTHERN PINE OR WEST COAST LUMBER INSPECTION BUREAU, POSTS AND TIMBERS DENSE NO. 1 STRUCTURAL OR BETTER 9.7 f (1400f).

POST DETAILS

NOTE: POST MAY BE WOOD OR STEEL. IN GENERAL, ONLY ONE MATERIAL WILL BE ALLOWED WITHIN A SINGLE PROJECT. HOWEVER, WITH APPROVAL OF THE ENGINEER, POSTS MAY BE MIXED ON A JOB PROVIDED DEFINITE LIMITS ARE ESTABLISHED AND ALL POSTS ARE OF THE SAME TYPE WITHIN THOSE LIMITS. ONLY ONE TYPE POST MAY BE USED WITHIN A SINGLE ASSEMBLY.

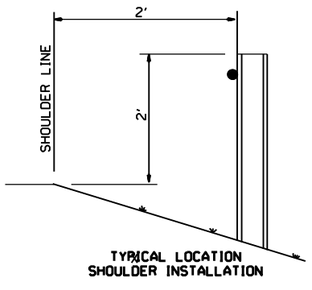

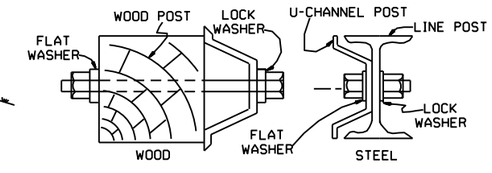

NOTE: USE 5/16 D. HEX. HEAD BOLT AND NUT (A307) WITH 1 FLAT WASHER AND 1 LOCK WASHER. BOLT, NUT AND WASHERS TO BE GALV. (AASHTO M 232) BOLT SHALL NOT EXTEND MORE THAN ONE(1) BOLT DIA. PAST NUT.

DELINEATOR POST DETAIL

NOTE: IN LIEU OF THE U-CHANNEL DELINEATOR POST THE CONTRACTOR SHALL HAVE THE OPTION OF EXTENDING THE GUARD CABLE LINE POST 1'-0" TALLER WHERE DELINEATOR POSTS ARE REQUIRED.
FOR WOOD POSTS, DELINEATORS MAY BE MOUNTED ON THE ANCHOR POSTS AT SPECIFIED INTERVALS.

DATE	REVISION	FILMED
10-18-96	REV. ASTM REF. TO AASHTO & CHANGED WOOD POST NOTE	
11-30-89	RELABED & LENGTHENED ANCHOR POST	11-30-89
3-23-89	LABELED POSTS	514-3-23-89
1-9-87	ISSUED	535-1-9-87

ARKANSAS STATE HIGHWAY COMMISSION

GUARD CABLE

STANDARD DRAWING GC-1

PLAN

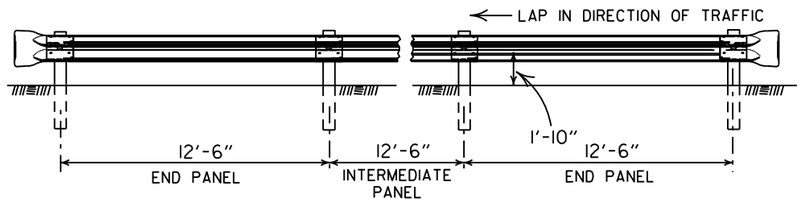

ELEVATION

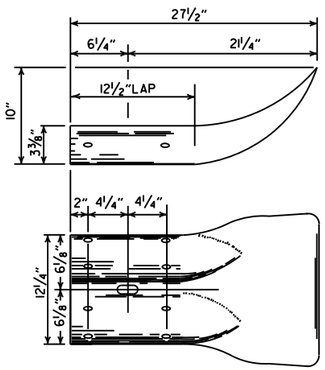

TERMINAL SECTION

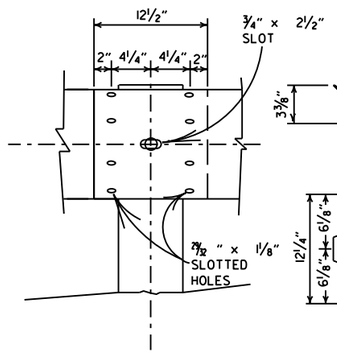

RAIL SPLICE

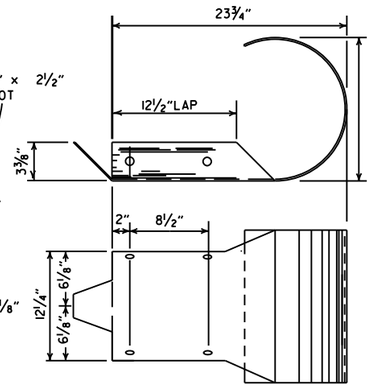

TERMINAL SECTION

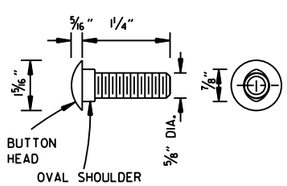

SPLICE BOLT

NOTE: POST BOLT SAME EXCEPT LENGTH.

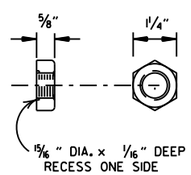

NUT

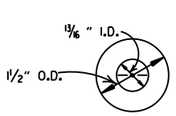

CUT STEEL WASHER

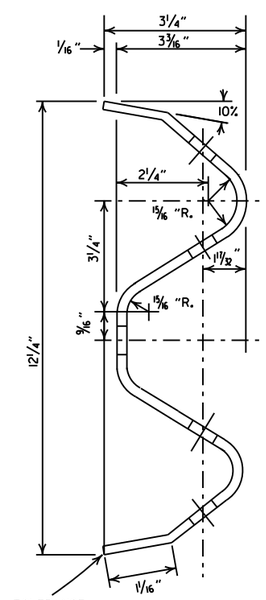

SECTION THRU RAIL

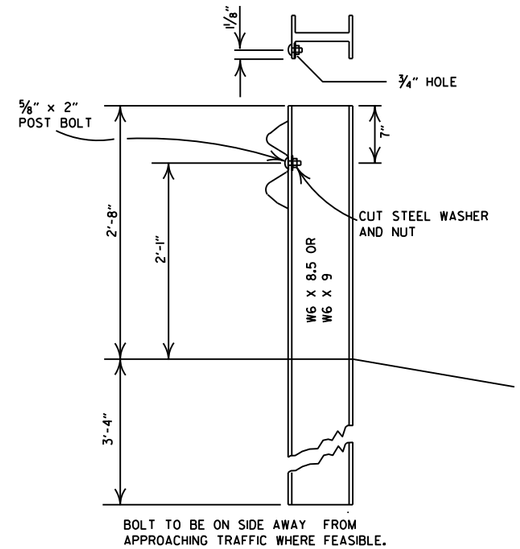

STEEL POST

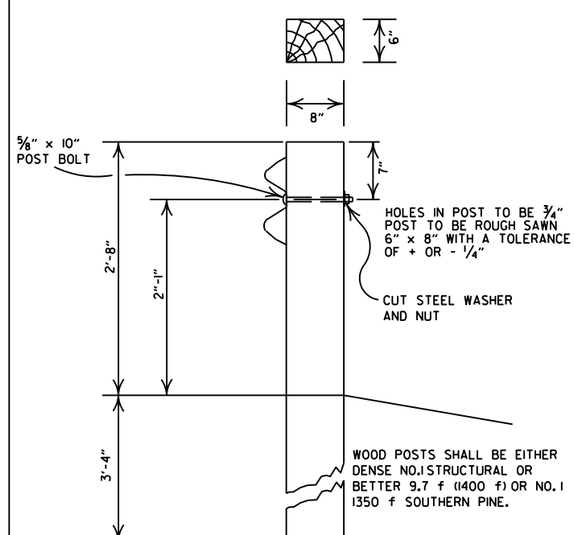

WOOD POST

DETAILS OF POST CONNECTIONS

DATE	REVISION	FILMED
11-07-19	RENUMBERED AND RENAMED	
11-16-17	REVISED GUARDRAIL HEIGHT	
07-14-10	RAISED HEIGHT OF GUARDRAIL 1"	
08-22-02	REVISED DIMENSION ON STEEL POST	
11-16-01	REVISED STEEL AND WOOD POST	
08-12-98	REMOVED CONCRETE POST	
10-18-96	CHANGED WOOD POST NOTE	10-18-96
06-02-94	ADDED ALTERNATE STEEL POST SIZE	
08-05-93	REVISED STEEL POSTS SIZE	8-5-93
08-15-91	DELETE STEEL PLATE WASHER & ADDED TYPE C TO TITLE	8-15-91
10-30-87	REMOVED DET. PLCMNT. ON HWY.	555-11-20-87
01-04-83	GRADE FOR WOOD POSTS	679-1-4-83
10-01-77	HARDENED WASHER	922-10-1-72
10-02-72	REVISED & REDRAWN	521-10-2-72

ARKANSAS STATE HIGHWAY COMMISSION

GUARDRAIL DETAILS (TYPE C)
STREET / ROAD BARRICADE OR
TEMPORARY INSTALLATION

STANDARD DRAWING GR-5

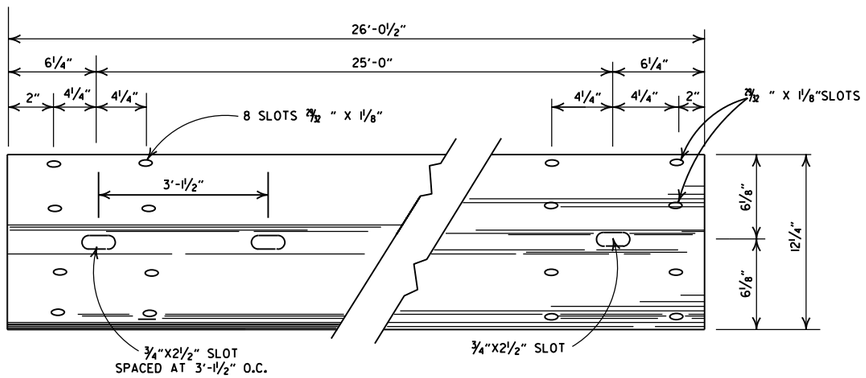

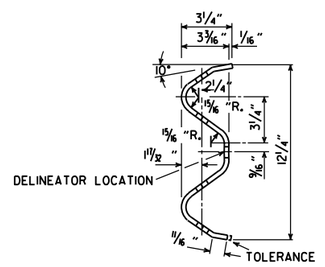

DETAILS OF W-BEAM GUARDRAIL

RAIL SECTION OF CLOSELY SIMILAR DIMENSIONS AND COMPARABLE STRENGTH MAY BE SUBSTITUTED IF APPROVED BY THE ENGINEER.

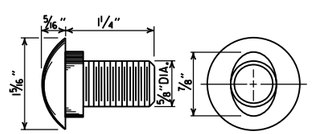

SPLICE BOLT
POST BOLT - SAME EXCEPT LENGTH

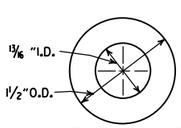

CUT STEEL WASHER

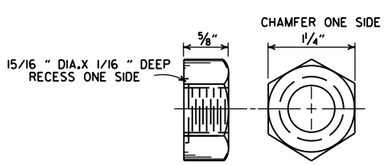

NUT

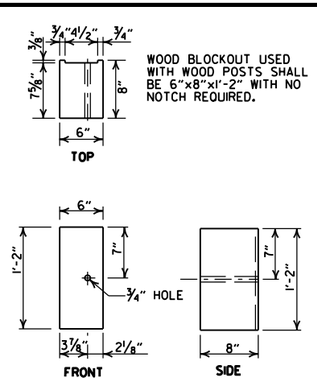

WOOD BLOCKOUT USED WITH WOOD POSTS SHALL BE 6"x8"x1'-2" WITH NO NOTCH REQUIRED.

WOOD BLOCKOUT (W-BEAM)

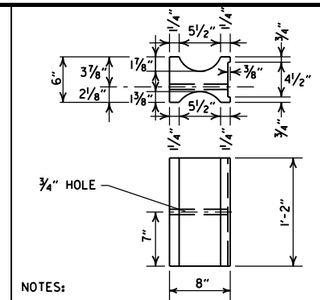

NOTES:

1. SIMILAR SHAPED PLASTIC BLOCKOUTS MAY BE USED AS LONG AS THEY MEET REQUIREMENTS FOR MANUAL FOR ASSESSING SAFETY HARDWARE (MASH).
2. DIMENSIONS ARE SUBJECT TO MANUFACTURERS TOLERANCES.

PLASTIC BLOCKOUT (W-BEAM)

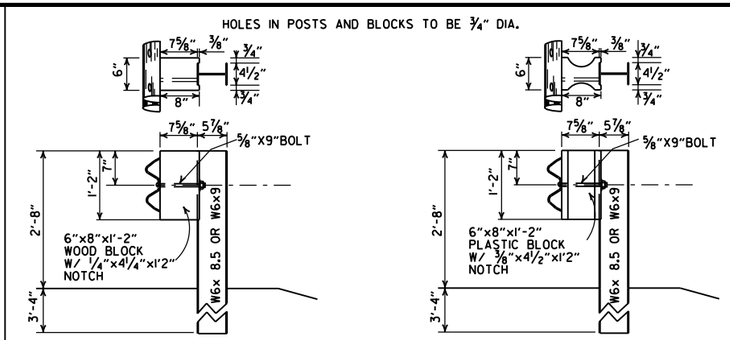

WOOD BLOCKOUT CONNECTIONS

PLASTIC BLOCKOUT CONNECTIONS

DETAILS OF STEEL LINE POST CONNECTIONS (W-BEAM)

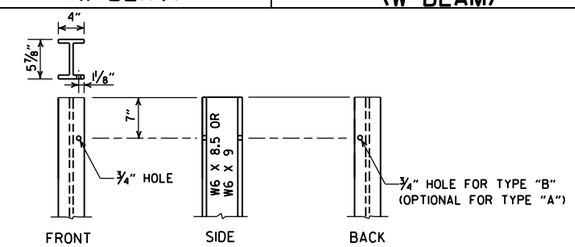

STEEL POST

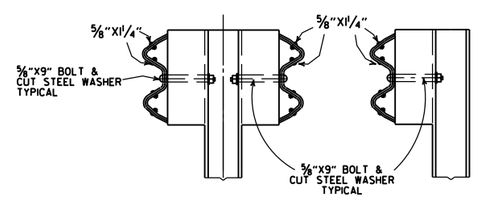

DETAILS OF STEEL LINE POST CONNECTIONS (W-BEAM)

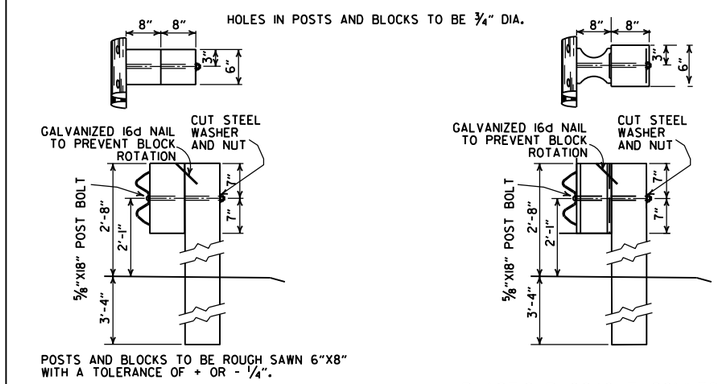

WOOD BLOCKOUT CONNECTIONS

PLASTIC BLOCKOUT CONNECTIONS

DETAILS OF WOOD LINE POST CONNECTIONS (W-BEAM)

-GENERAL NOTES-

ALL BOLTS SHALL BE SUFFICIENT LENGTH TO EXTEND THROUGH THE FULL THICKNESS OF THE NUT AND NO MORE THAN ¾" BEYOND IT.

WHERE W-BEAM GUARDRAIL CONTINUES, THE INTERMEDIATE SECTIONS SHALL HAVE A POST SPACING OF 6'-3" UNLESS OTHERWISE NOTED.

W-BEAM GUARDRAIL REPRESENTING INTERMEDIATE SECTIONS WILL BE MEASURED ALONG THE ROADWAY FACE FROM CENTERLINE OF POST TO CENTERLINE OF POST.

USE W-BEAM GUARDRAIL COMPONENTS OF SAME MATERIAL FOR ENTIRE JOB. FOR EXTENSIONS OR MODIFICATION OF EXISTING GUARDRAIL, W-BEAM GUARDRAIL COMPONENTS OF THE SAME TYPE AS THOSE EXISTING SHALL BE USED.

ANY BACKFILLING UNDER OR AROUND POST SHALL BE DAMP SAND THOROUGHLY TAMPED IN PLACE.

WOOD POSTS & WOOD BLOCKS SHALL BE EITHER DENSE NO. 1 STRUCTURAL OR BETTER 9.7f (1400 f) OR NO. 1 1350 f SOUTHERN PINE.

CONTRACTOR SHALL HAVE THE OPTION OF USING WOOD BLOCKOUTS FOR W-BEAM GUARDRAIL OR PLASTIC BLOCKOUTS, AS LONG AS BLOCKOUT USED MEETS REQUIREMENTS FOR MANUAL FOR ASSESSING SAFETY HARDWARE (MASH) FOR W-BEAM GUARDRAIL.

DELINEATORS SHALL BE MOUNTED AT 37.5' SPACING ON THE FRONT FACE OF THE GUARDRAIL. SPACING MAY BE REDUCED IN CURVES, AS DIRECTED BY THE ENGINEER. COLOR SHALL BE IN ACCORDANCE WITH THE MANUAL ON UNIFORM TRAFFIC CONTROL DEVICES. PAYMENT FOR DELINEATORS SHALL BE CONSIDERED INCLUDED IN THE PRICE BID PER LIN. FT. FOR GUARDRAIL.

DATE	REVISION	FILMED
05-19-22	REVISED GENERAL NOTES. ADDED DELINEATOR LOCATION.	
11-07-19	RENUMBERED AND RENAMED	
11-16-17	REVISED GENERAL NOTES AND RAISED GUARDRAIL HEIGHT 3"	
07-14-10	RAISED HEIGHT OF GUARDRAIL 1"	
10-15-09	ADDED REFERENCE TO MASH	
04-10-03	REVISED GENERAL NOTES	
08-22-02	REVISED DIMENSION ON WOOD & PLASTIC BLOCKOUT CONNECTIONS & STEEL POST	
11-16-01	REVISED WOOD BLOCKOUT & DETAILS OF WOOD LINE POST CONNECTIONS	
03-30-00	REMOVED GUARDRAIL AT BRIDGE ENDS	
01-12-00	ADDED PLASTIC BLOCKOUT	
08-12-98	REV. BLOCKOUTS TO WOOD. DELETED CONC. POST & REV. GENERAL NOTE. DELETED DET. OF GUARDRAIL REPLACE. BEHIND CURB & DET. OF POST PLACE. IN SOLID ROCK. & ADDED DETAILS OF STEEL LINE POST CONN. REMOVED BACK-UP PLATE. REVISED HOLES IN STEEL POLES	
04-03-97	REMOVED "LAP IN DIRECTION OF TRAFFIC" NOTE & PLACED ARROWS ON WASHERS	
10-18-96	REVISED WOOD POST NOTE	
06-02-94	ADDED ALT. STEEL POST SIZE	
08-05-93	REVISED STEEL POST SIZE	8-5-93
10-01-92	REDRAWN & REVISED	10-1-92
08-15-91	REVISED WASHER NOTE	8-15-91
08-02-90	REV. GEN. NOTE & DEPTH OF ANC. POST IN ROCK	8-2-90
07-15-88	REVISED SECTION 3 & GENERAL NOTES	
03-04-88	REV. ANCHOR POST, ELEV. NOTES & POST IN ROCK	780-3-4-88
10-30-87	REVISED WOOD LINE POST DETAIL	546-10-30-87
10-09-87	REDRAWN & REVISED	802-10-9-87

ARKANSAS STATE HIGHWAY COMMISSION

GUARDRAIL DETAILS

STANDARD DRAWING GR-6

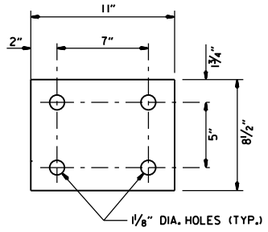

WASHER PLATE

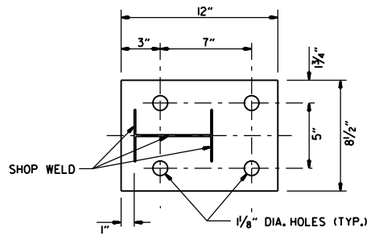

BASE PLATE

Note: Bolts, nuts, washers and plates shall be galvanized in accordance with Section 807 of the Standard Specifications.

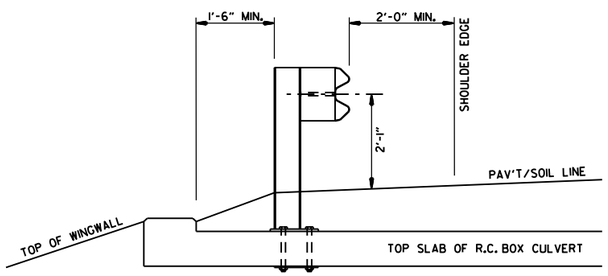

SECTION A-A

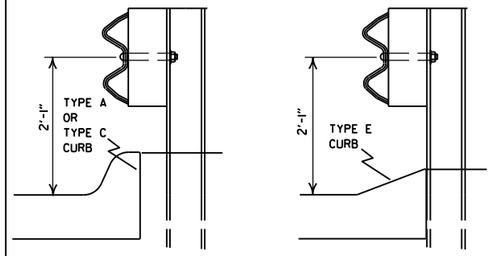

FOR DESIGN SPEEDS OF 50 MPH OR LESS

ALIGN FACE OF GUARDRAIL WITH FACE OF CURB.

FOR DESIGN SPEEDS OF 55 MPH OR MORE

PLACE GUARDRAIL POSTS AGAINST BACK OF CURB.

DETAIL OF GUARDRAIL PLACEMENT BEHIND CURB (W-BEAM)

FOR DESIGN SPEEDS OF 50 MPH OR LESS ALL CURB FACES, AS SHOWN ON STD. DRWG. CG-1, MAY BE USED. FOR DESIGN SPEEDS OF 55 MPH OR MORE TYPE "E" CURB FACE SHALL BE USED.

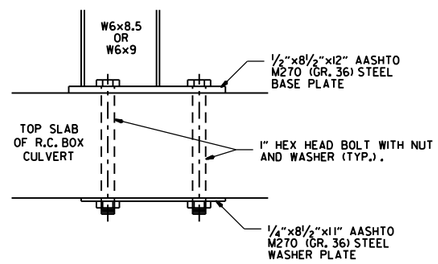

DETAIL OF CONNECTION

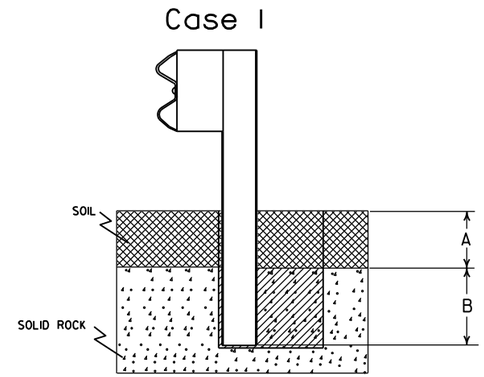

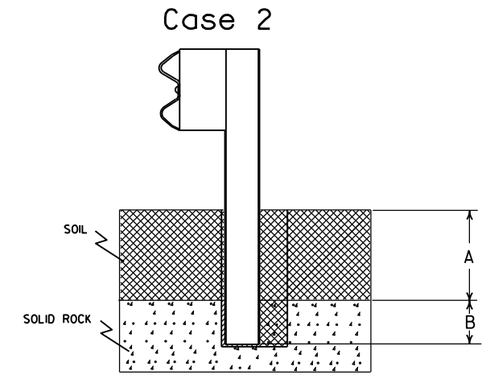

Plan View Steel Posts

Either hole configuration acceptable

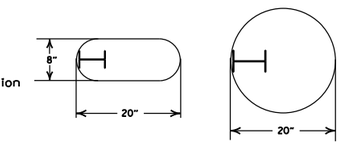

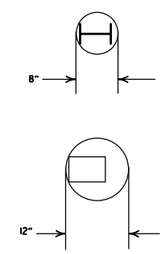

Plan View Wood Posts

Either hole configuration acceptable

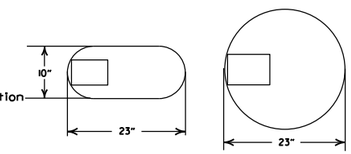

Notes: For overlying soil depths (A) ranging from 0 to 18", the depth of required drilling (B) is equal to 24".

Zone A:
Backfill according to Section 617.03(a).

Zone B:
Backfill hole in 6" lifts with material meeting the requirements of Section 802.02(c) - Alternate gradation. Compact to 95% maximum dry density per ASTM D-698.

Notes: For overlying soil depths (A) ranging from 18" to 44", the depth of required drilling (B) is equal to either 12" or 44" minus the depth of soil whichever is less.

Zone A & B:
Backfill according to Section 617.03(a).

DETAIL OF POST PLACEMENT IN SOLID ROCK (W-BEAM)

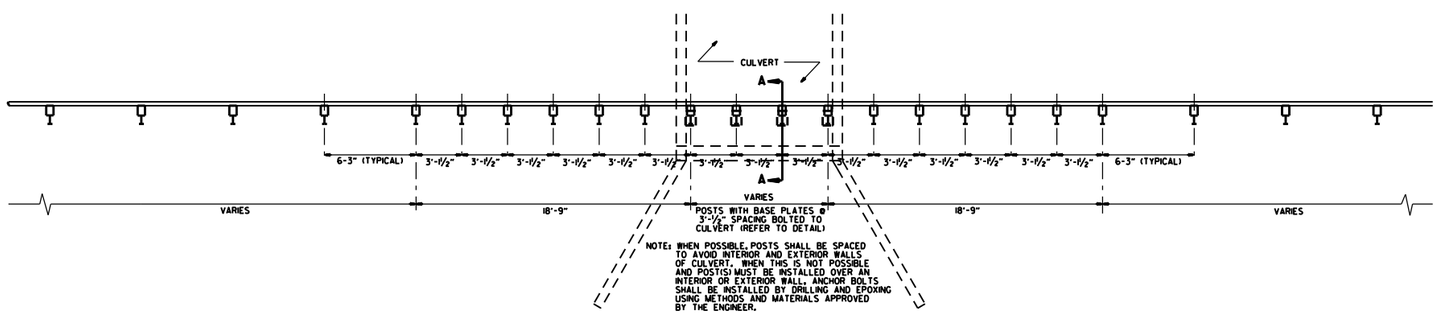

PLAN LAYOUT OF TYPE A GUARDRAIL AT LOW-FILL CULVERTS

NOTE: THIS DETAIL IS TO BE USED ONLY WHEN THE COVER OVER THE CULVERT DOES NOT PERMIT FULL EMBEDMENT OF GUARDRAIL POSTS AS SHOWN ON STD. DWG. GR-6.

DATE	REVISION	FILMED
11-07-19	RENUMBERED, RENAMED, REVISED REFERENCE	
11-16-17	REVISED GUARDRAIL HEIGHT	
07-14-10	RAISED HEIGHT OF GUARDRAIL 1"	
04-12-07	REVISED DETAIL OF GUARDRAIL PLACEMENT BEHIND CURB	
11-10-05	ADDED GUARDRAIL PLACEMENT BEHIND CURB; REVISED DETAIL OF CONNECTION	
11-18-04	REVISED POST PLACEMENT IN ROCK & CULVERT CONNECTION DETAILS. ADDED DETAIL FOR GUARDRAIL PLACEMENT AT LOW-FILL CULVERTS	
03-30-00	REMOVED CONCRETE INSERT ANCHOR	
08-12-98	CHANGED STEEL SPACER BLOCK TO WOOD BLOCKOUT. ADDED DET. OF GUARDRAIL CONNECTION TO R.C. BOX CULV'T., DELETED DET. OF STEEL LINE POST CONN. & ADDED DET. OF GUARDRAIL PLACE. BEHIND CURB & DET. OF POSTPLACE. IN SOLID ROCK	
04-03-96	PLACED ARROWS AT CUT STEEL WASHERS	4-3-96
10-18-96	REV. ASTM REF. TO AASHTO	
11-22-95	ADDED OPTIONAL HOLES	
06-02-94	REVISED ALTERNATE POST SIZE	
08-05-93	REVISED STEEL POST SIZE	
10-01-92	REDRAWN & REVISED	10-1-92
08-02-90	DEL. WASHER ON ANCHOR ASSEMBLY	8-2-90
07-15-88	CONFORMED TO 1988 SPECS	
03-04-88	REVISED ANCHOR NOTE	
10-30-87	REVISED ANCHOR ASSEMBLY	712-10-30-87
10-30-87	REVISED PLACEMENT BEHIND CURB	547-10-30-87
10-09-87	REDRAWN & REVISED	803-10-9-87

ARKANSAS STATE HIGHWAY COMMISSION

GUARDRAIL DETAILS

STANDARD DRAWING GR-7

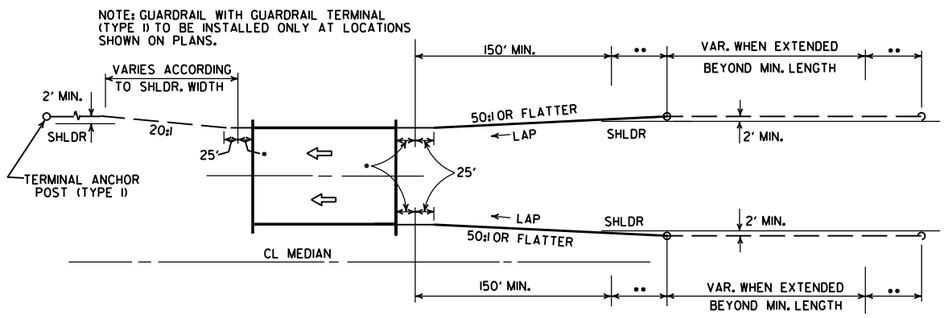

ONE-WAY TRAFFIC

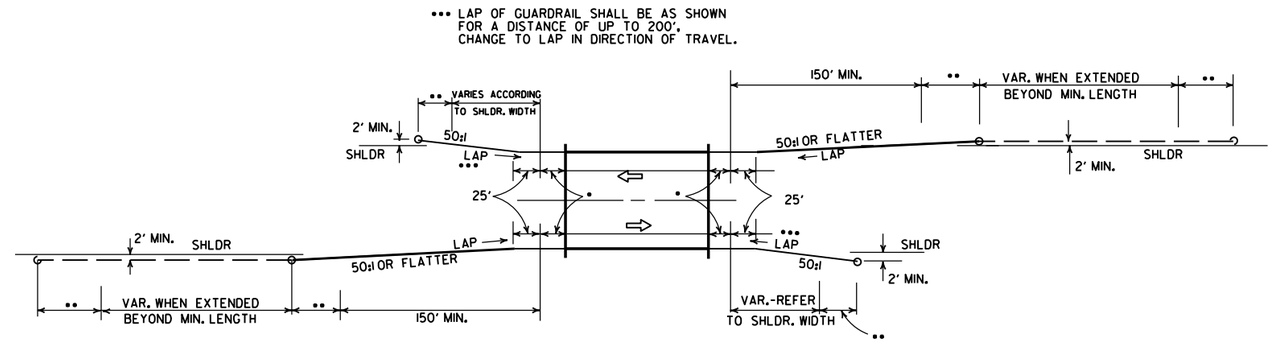

TWO-WAY TRAFFIC

METHODS OF INSTALLATION OF GUARDRAIL AT LESS THAN FULL SHOULDER WIDTH BRIDGES USING GUARDRAIL TERMINAL (TYPE 2)

••• LAP OF GUARDRAIL SHALL BE AS SHOWN FOR A DISTANCE OF UP TO 200'. CHANGE TO LAP IN DIRECTION OF TRAVEL.

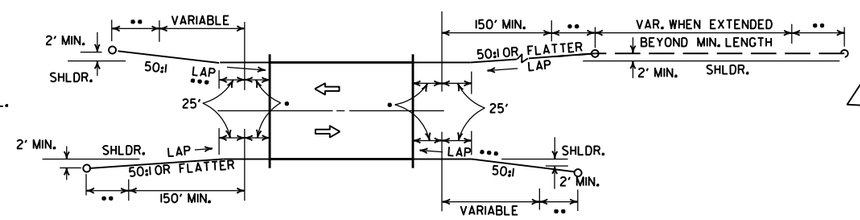

TWO-WAY TRAFFIC

NOTE: GUARDRAIL WITH GUARDRAIL TERMINAL (TYPE I) TO BE INSTALLED ONLY AT LOCATIONS SHOWN ON PLANS.

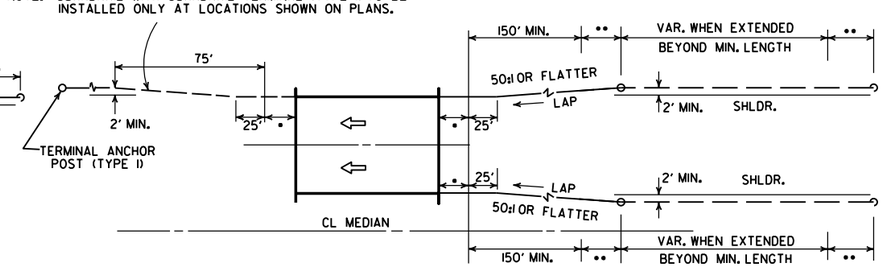

ONE-WAY TRAFFIC

METHOD OF INSTALLATION OF GUARDRAIL AT FULL SHOULDER WIDTH BRIDGES USING GUARDRAIL TERMINAL (TYPE 2)

••• LAP OF GUARDRAIL SHALL BE AS SHOWN FOR A DISTANCE OF UP TO 200'. CHANGE TO LAP IN DIRECTION OF TRAVEL.

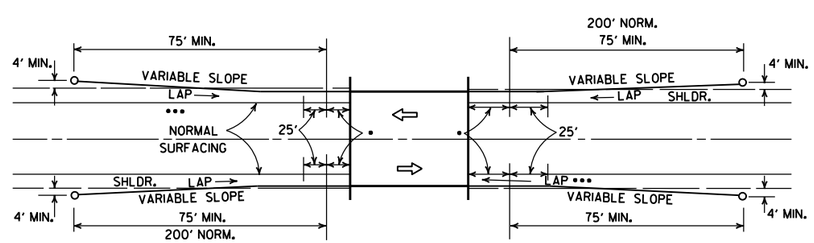

METHOD OF INSTALLATION OF GUARDRAIL USING GUARDRAIL TERMINAL (TYPE I) (FULL SHOULDER WIDTH OR LESS BRIDGES)

LEGEND

- • THRIE BEAM GUARDRAIL TERMINAL
- •• GUARDRAIL TERMINAL (TYPE 2)

DATE	REVISION	DATE FILM
11-07-19	RENUMBERED AND RENAMED	
4-17-08	REVISED LAYOUTS	
11-10-05	REMOVED GUARDRAIL NOTES AND DETAILS	
11-16-01	DELETED NOTE-METHOD OF INSTALLATION OF GUARDRAIL USING GUARDRAIL TERM. (TY. I)	
1-12-00	ADDED CONSTRUCTION NOTE	1-12-00
6-26-97	REVISED LAYOUT	
10-1-92	REDRAWN & REVISED	10-1-92
	ADDED NOTE	
10-9-87	REDRAWN & REVISED	

ARKANSAS STATE HIGHWAY COMMISSION

GUARDRAIL DETAILS

STANDARD DRAWING GR-8

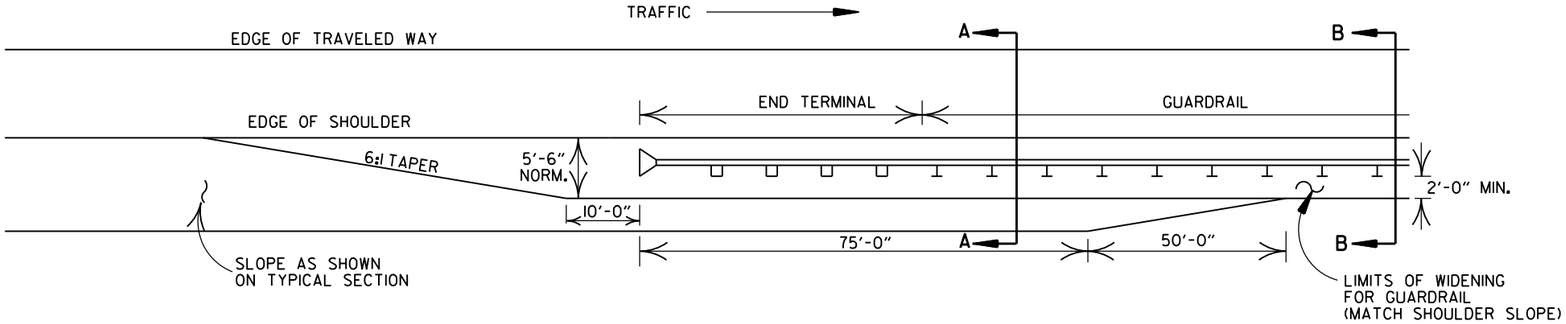

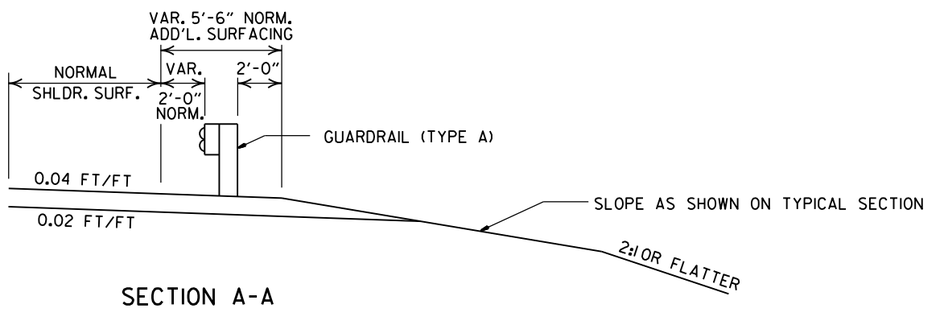

SECTION A-A

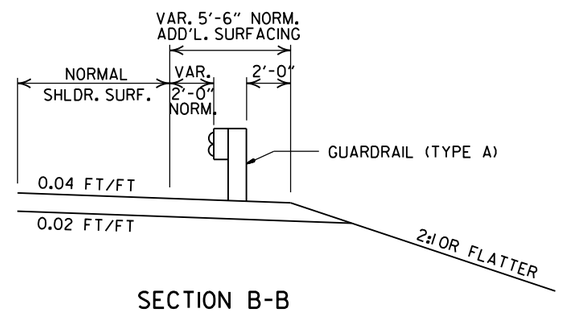

SECTION B-B

DETAILS OF WIDENING FOR GUARDRAIL

NOTE: NORMAL SECTION TO BE WIDENED APPROX. 5'-6" EACH SIDE TO SUPPORT GUARDRAIL.

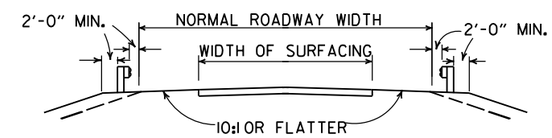

SECTION ON TANGENT

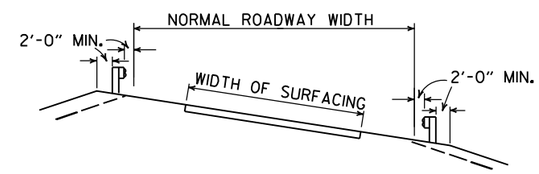

SECTION ON CURVE

DETAILS SHOWING POSITION OF GUARDRAIL ON HIGHWAY

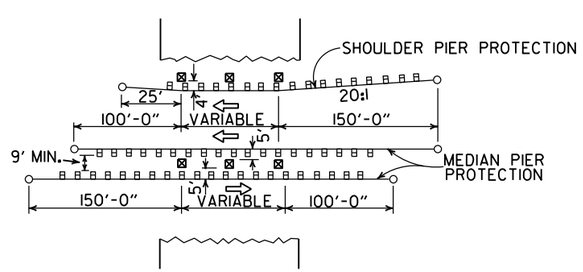

METHOD OF INSTALLATION OF GUARDRAIL AT FIXED OBSTACLE

DATE	REVISION	DATE FILM
11-07-19	RENUMBERED AND RENAMED	
4-17-08	MINOR REVISION	
11-10-05	DRAWN	

ARKANSAS STATE HIGHWAY COMMISSION

GUARDRAIL DETAILS

STANDARD DRAWING GR-9

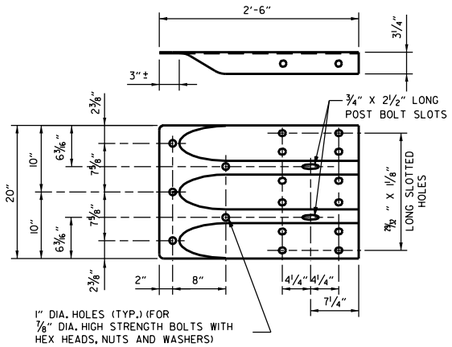

SPECIAL END SHOE

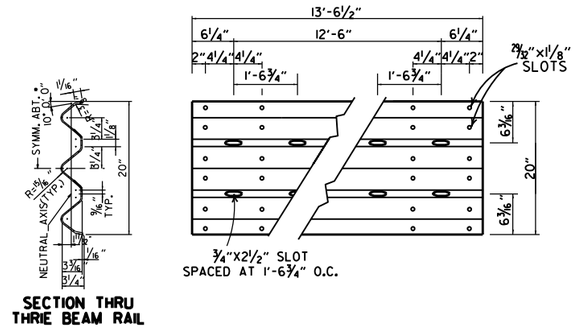

THRIE BEAM RAIL

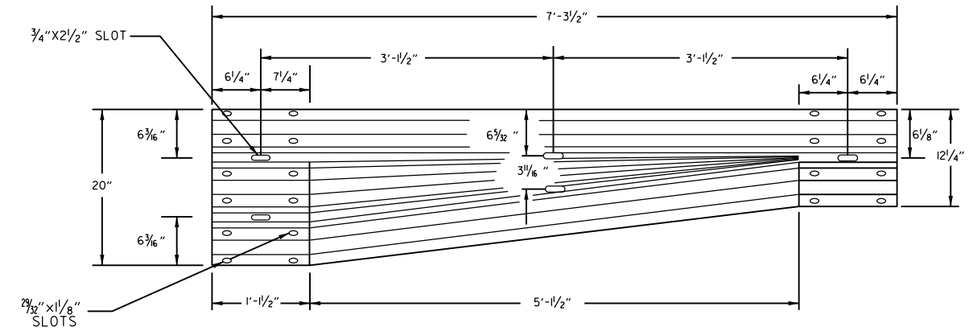

TRANSITION SECTION

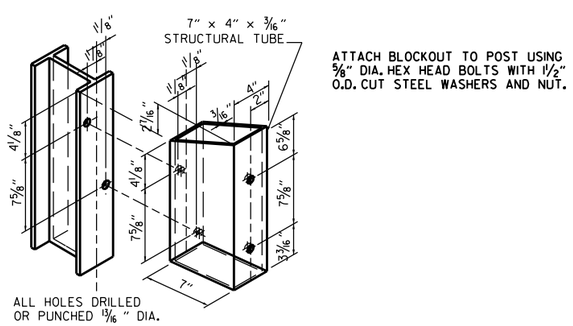

STRUCTURAL STEEL TUBING BLOCKOUT DETAIL

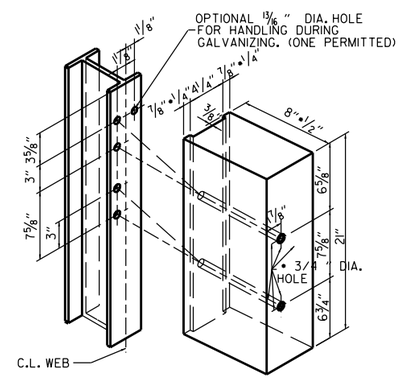

ALL HOLES 13/16" DIAMETER EXCEPT AS NOTED

HOLE PUNCHING DETAIL FOR STEEL POST & WOOD OR PLASTIC BLOCKOUTS

NOTE: BLOCKS SHALL BE THE SAME TYPE THROUGHOUT THE PROJECT LIMITS.

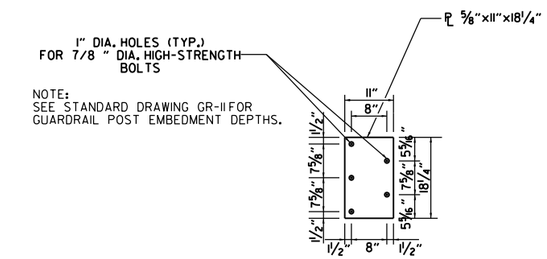

NOTE:
SEE STANDARD DRAWING GR-11 FOR GUARDRAIL POST EMBEDMENT DEPTHS.

CONNECTOR PLATE

CONNECTOR PLATE SHALL BE AASHTO M270, GR. 36 AND SHALL BE GALVANIZED AFTER FABRICATION. GALVANIZING SHALL CONFORM TO SUBSECTION 807.19 OF THE STANDARD SPECIFICATIONS. CONNECTOR PLATE TO BE BOLTED TO SPECIAL END SHOE USING 7/8" DIA. HIGH STRENGTH BOLTS, WITH THE HEADS PLACED ON THE TRAFFIC FACE. WASHERS SHALL BE USED UNDER THE HEAD AND NUT. BOLTS, NUTS AND WASHERS SHALL BE GALVANIZED AND SHALL CONFORM TO SUBSECTION 807.06.

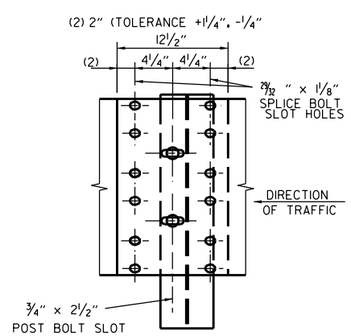

THRIE BEAM RAIL SPLICE AT POST

GENERAL NOTES:

THE THRIE BEAM RAIL, SPECIAL END SHOE, AND THE TRANSITION SECTION SHALL BE MADE OF STEEL AND SHALL BE 12 GAGE. ZINC COATING SHALL BE TYPE I.

RAIL POSTS SHALL BE SET PERPENDICULAR TO THE ROADWAY PROFILE GRADE AND VERTICALLY IN CROSS SECTION.

ALL BOLTS SHALL BE SUFFICIENT LENGTH TO EXTEND THROUGH THE FULL THICKNESS OF THE NUT AND NO MORE THAN 3*4" BEYOND IT.

ALL LAP SPLICES, INCLUDING SPECIAL END SHOES, SHALL BE MADE IN THE DIRECTION SHOWN ON STANDARD DRAWINGS GR-8 & GR-13.

REFER TO STD. DRWG. GR-11 FOR POST DETAILS.

USE THRIE BEAM GUARDRAIL COMPONENTS OF SAME MATERIAL FOR ENTIRE JOB.

THRIE BEAM POSTS SHALL BE SAME MATERIAL AS W-BEAM POSTS FOR ENTIRE JOB.

WOOD POSTS & WOOD BLOCKS SHALL BE EITHER DENSE NO. 1 STRUCTURAL OR BETTER 9.7f (1400 f) OR NO. 1 1350 f SOUTHERN PINE.

DATE	REVISION	FILMED
11-07-19	RENAMED AND REVISED REFERENCES	
11-16-17	REVISED TRANSITION SECTION, GUARD RAIL HEIGHT, AND GENERAL NOTES; MOVED THRIE BEAM GUARD RAIL CONNECTIONS AT BRIDGES ENDS TO STD. DRWG. GR-12	
07-14-10	RAISED HEIGHT OF W-BEAM 1"	
11-29-07	ADDED PLASTIC BLOCKOUTS	
11-10-05	ADDED NOTE FOR ATTACHING STEEL BLOCKOUT	
11-18-04	REVISED GENERAL NOTES	
10-9-03	REVISED GENERAL NOTES	
04-10-03	REVISED GENERAL NOTES	
08-22-02	REVISED NOTE (2)	
06-29-00	MOVED DIMENSION LINES	
05-18-00	ADDED NOTE	
03-30-00	DRAWN & ISSUED	

ARKANSAS STATE HIGHWAY COMMISSION

GUARDRAIL DETAILS

STANDARD DRAWING GR-10

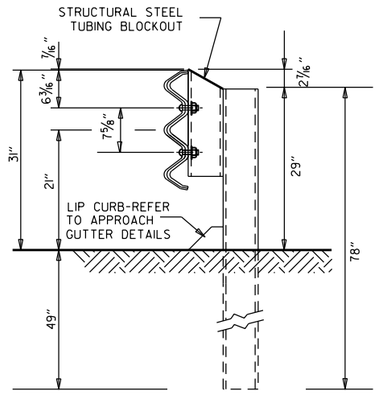

THRIE BEAM RAIL WITH STEEL TUBING BLOCKOUT
AND STEEL POST
POSTS 1-7

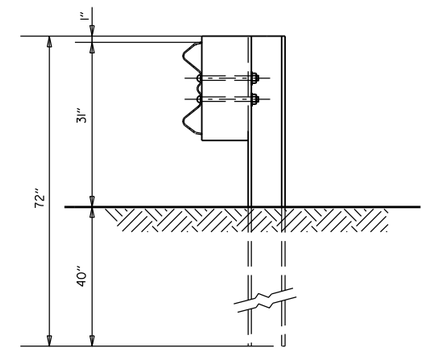

W-BEAM TO THRIE BEAM TRANSITION RAIL
WITH WOOD OR PLASTIC BLOCKOUT AND STEEL POST
POST 8

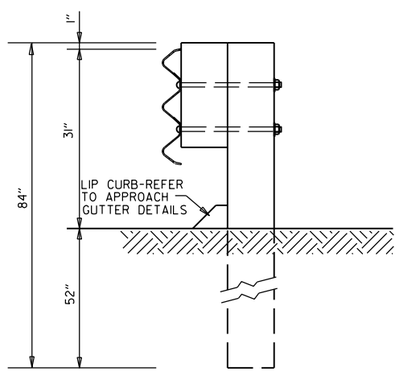

THRIE BEAM RAIL
WITH WOOD OR PLASTIC
BLOCKOUTS & WOOD POSTS
POSTS 1-6

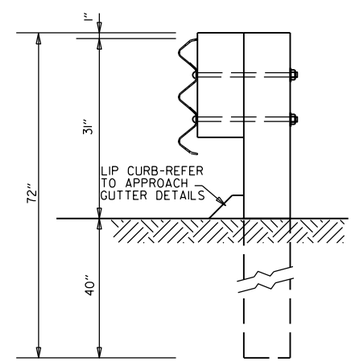

THRIE BEAM RAIL
WITH WOOD OR PLASTIC
BLOCKOUT & WOOD POST
POST 7

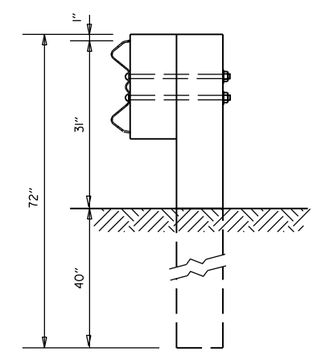

W-BEAM TO THRIE BEAM
TRANSITION RAIL WITH WOOD OR
PLASTIC BLOCKOUT & WOOD POST
POST 8

GENERAL NOTES:

RAIL POSTS SHALL BE SET PERPENDICULAR TO THE ROADWAY PROFILE GRADE AND VERTICALLY IN CROSS SECTION.

WOOD POSTS & WOOD BLOCKS SHALL BE EITHER DENSE NO. 1 STRUCTURAL OR BETTER 9.7f (1400 f) OR NO. 1 1350 f SOUTHERN PINE.

DATE	REVISION	FILMED
11-07-19	RENAMED	
11-16-17	REVISED GUARDRAIL HEIGHT, CHANGED STD. DWG. NUMBER FROM GR-10A TO GR-11	
07-14-10	REVISED POST 8 DIMENSIONS	
11-29-07	ADDED PLASTIC BLOCKOUTS	
08-22-02	REVISED LIP CURB NOTE	
03-30-00	DRAWN & ISSUED	

ARKANSAS STATE HIGHWAY COMMISSION

GUARDRAIL DETAILS

STANDARD DRAWING GR-11

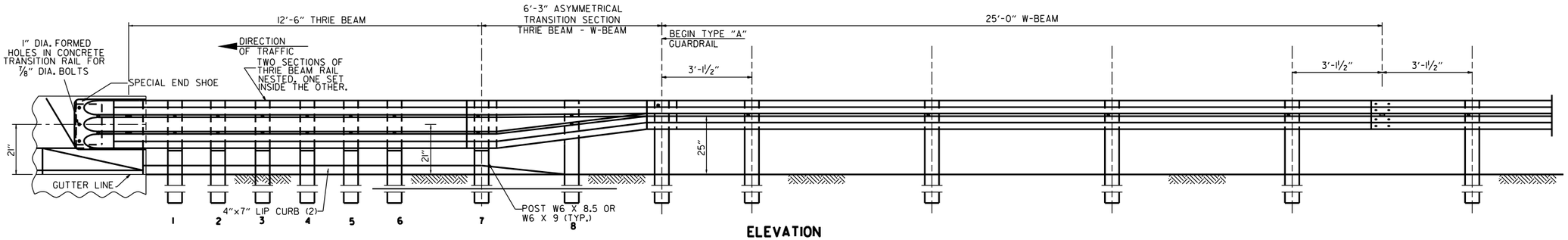

ELEVATION

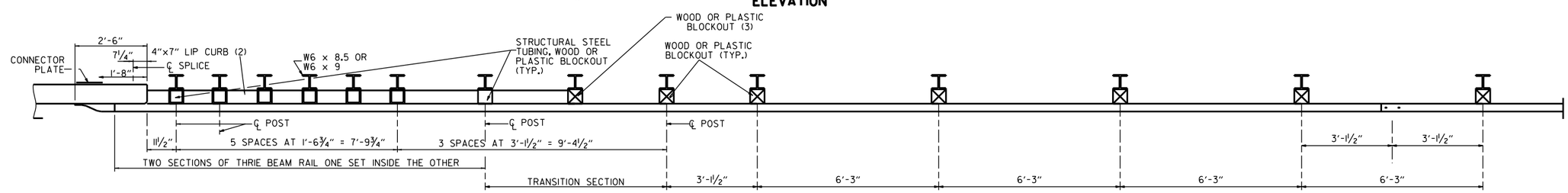

PLAN

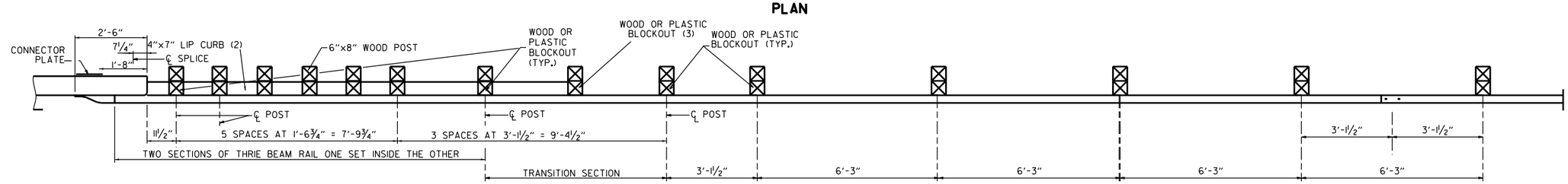

PLAN

(1) VERIFY BOLT SPACING FROM RAIL TRANSITION PRODUCER.
(2) REFER TO APPROACH GUTTER DETAILS.
(3) LENGTH OF BLOCKOUT ON POST 8 TO BE MODIFIED TO FIT RAIL WIDTH.

THRIE BEAM GUARDRAIL CONNECTION AT BRIDGE ENDS

GENERAL NOTES:

THE THRIE BEAM RAIL, SPECIAL END SHOE, AND THE TRANSITION SECTION SHALL BE MADE OF STEEL AND SHALL BE 12 GAGE. ZINC COATING SHALL BE TYPE I.

RAIL POSTS SHALL BE SET PERPENDICULAR TO THE ROADWAY PROFILE GRADE AND VERTICALLY IN CROSS SECTION.

ALL BOLTS SHALL BE SUFFICIENT LENGTH TO EXTEND THROUGH THE FULL THICKNESS OF THE NUT AND NO MORE THAN 3/4" BEYOND IT.

ALL LAP SPLICES, INCLUDING SPECIAL END SHOES, SHALL BE MADE IN THE DIRECTION SHOWN ON STANDARD DRAWINGS GR-8 & GR-13.

REFER TO STD. DRWG. GR-11 FOR POST DETAILS.

USE THRIE BEAM GUARDRAIL COMPONENTS OF SAME MATERIAL FOR ENTIRE JOB.

THRIE BEAM POSTS SHALL BE SAME MATERIAL AS W-BEAM POSTS FOR ENTIRE JOB.

POSTS SHALL NOT BE PLACED AT SPLICE LOCATIONS ALONG W-BEAM RAILS.

WOOD POSTS & WOOD BLOCKS SHALL BE EITHER DENSE NO. 1 STRUCTURAL OR BETTER 9.7f (1400 f) OR NO. 1 1350 f SOUTHERN PINE.

DATE	REVISION	FILMED
05-14-20	REVISED NOTES	
11-07-19	RENAMED & REVISED REFERENCES	
11-16-17	RE-DRAWN FROM STD. DWG. GR-10 & ISSUED	

ARKANSAS STATE HIGHWAY COMMISSION

GUARDRAIL DETAILS

STANDARD DRAWING GR-12

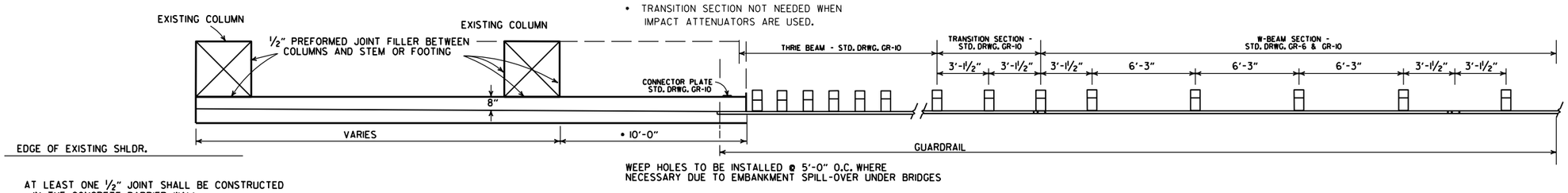

AT LEAST ONE 1/2" JOINT SHALL BE CONSTRUCTED IN THE CONCRETE BARRIER WALL. JOINTS SHALL BE EQUALLY SPACED AT A MAXIMUM OF 25'-0" O.C. FILL JOINT WITH PREFORMED JOINT FILLER.

PLAN OF CONCRETE BARRIER WALL

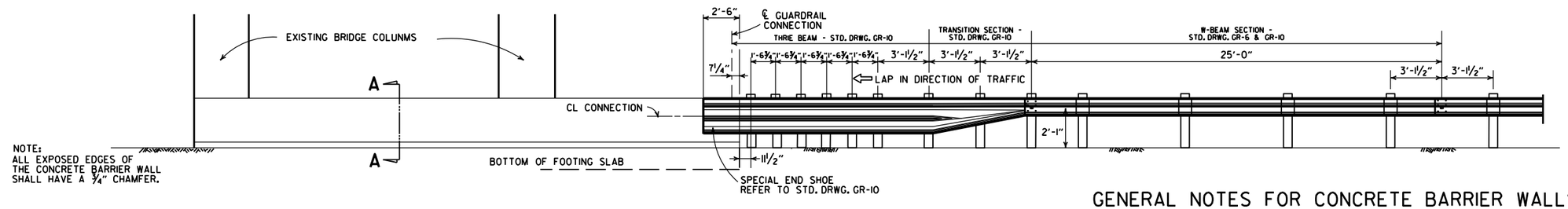

NOTE:
ALL EXPOSED EDGES OF THE CONCRETE BARRIER WALL SHALL HAVE A 3/4" CHAMFER.

ELEVATION OF CONCRETE BARRIER WALL

GENERAL NOTES FOR CONCRETE BARRIER WALLS

1. ALL BARRIER WALLS SHALL BE CONSTRUCTED IN ACCORDANCE WITH SECTION 631 OF THE STANDARD SPECIFICATIONS, 2014 EDITION.
2. CONTRACTION JOINTS REQUIRED @ 15'-0" MAXIMUM SPACING FOR BARRIER TYPES MEDIAN A, SIDE A. A 30'-0" MAXIMUM SPACING IS REQUIRED FOR TYPES MEDIAN C, SIDE C, D & E.
3. ALL CONTRACTION JOINTS TO BE FORMED IN FRESH CONCRETE ON TOP AND IN SIDES OF BARRIER WALL.
4. DOWEL BARS FOR BARRIER TYPES MEDIAN A, SIDE A WILL NOT BE REQUIRED IF BARRIER AND MINIMUM 4' WIDE BASE ARE CAST AS A COMPLETE UNIT.
5. CONTRACTION JOINTS ARE NOT PERMITTED AT THE DOWEL BAR LOCATIONS.
6. ALL EXPOSED EDGES OF CONCRETE BARRIER WALL SHALL HAVE A 3/4" CHAMFER.
7. THE DESIGN OF BARRIER WALL TYPES SIDE C, D & E IS BASED ON A MINIMUM FOUNDATION BEARING CAPACITY OF ONE TON PER SQUARE FOOT. UNSTABLE FOUNDATION MATERIAL SHALL BE REMOVED AND REPLACED TO PROVIDE A FIRM FOUNDATION AS DIRECTED BY THE ENGINEER.
8. SPACING BETWEEN EXPANSION JOINTS SHALL NOT EXCEED 400 FT FOR BARRIER TYPES MEDIAN A AND SIDE A OR 120 FT FOR BARRIER TYPES SIDE C, D & E. EXPANSION JOINTS SHALL BE FORMED USING 1" PREFORMED JOINT FILLER. CONTINUOUS REINFORCEMENT SHALL BE CUT 2" CLEAR OF EXPANSION JOINTS.
9. CONSTRUCT DRAINAGE OPENINGS AT EVERY 50' O.C. AND AT SAGS IF SHOWN ON THE PLANS. DOWEL BARS SHALL NOT BE PLACED WITHIN 3" OF DRAINAGE OPENINGS.
10. MAINTAIN 3" CLEARANCE ON ALL FOOTING REINFORCEMENT AND 2" CLEARANCE ON ALL OTHER REINFORCEMENT.
11. REFER TO BARRIER MOUNTED LUMINARE SPECIAL DETAILS FOR INFORMATION REGARDING CONDUIT IN CONCRETE BARRIER WALLS. REFER TO ILLUMINATION LAYOUT FOR LOCATIONS OF CONDUIT RUNS.
12. BARRIER REINFORCING BARS ANCHORED INTO EXISTING CONCRETE PAVEMENT SHALL BE INSTALLED AND SECURED ACCORDING TO 804.06 USING AN APPROVED ANCHORING SYSTEM FROM OPL.

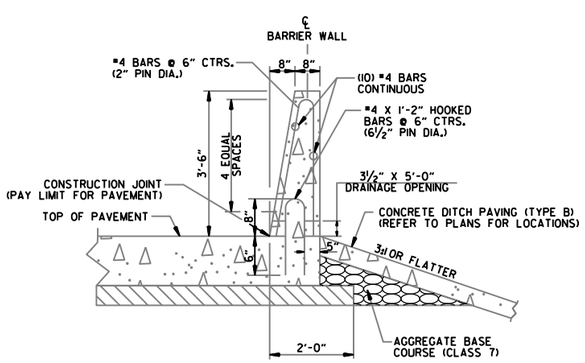

SECTION A-A
CONCRETE BARRIER WALL
(SIDE TYPE A)

NOTE: SIDE TYPE A IS FOR USE WITH PROPOSED PAVEMENT.

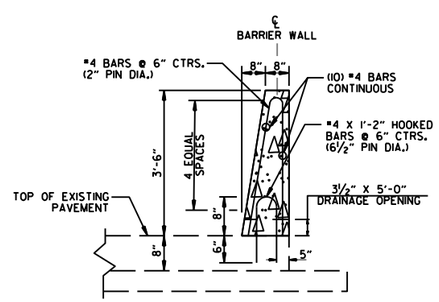

SECTION A-A
CONCRETE BARRIER WALL
(SIDE TYPE A-1)

NOTE: SIDE TYPE A-1 IS FOR USE WITH EXISTING PAVEMENT.

NOTE:
THE COST FOR THE MODIFICATION OF THE BARRIERS AND DROP INLETS ARE TO BE SUBSIDIARY TO CONCRETE BARRIER WALLS AND CURBS.

DATE	REVISION	FILMED
11-07-19	ADDED GENERAL NOTES.	
11-16-17	REVISED CONCRETE BARRIER WALL. RAISED GUARDRAIL HEIGHT 3" AND REVISED POST SPACING. CHANGED STD. DWG. NUMBER FROM GR-11 TO GR-13	
07-14-10	RAISED HEIGHT OF W-BEAM 1"	
08-22-02	REV. SECTION A-A OF DETAILS OF CONCRETE BARRIER WALL	
06-29-00	MOVED DIMENSION LINE	
05-18-00	ADDED NOTE	
03-30-00	REVISED TO INCLUDE THRIE BEAM	
06-02-94	ADDED TRANSITION SECTION NOTE	
10-01-92	REDRAWN & REVISED	10-1-92
08-15-91	REVISED DRAWING PLAN CONC. BARR.	8-15-91
02-16-89	ADDED SKEWED DETAILS	594-2-16-89
07-14-88	CHANGED TITLE	
10-09-87	REDRAWN & REVISED	

ARKANSAS STATE HIGHWAY COMMISSION

CONCRETE BARRIER WALL
(PIER PROTECTION TYPE A)

STANDARD DRAWING GR-13

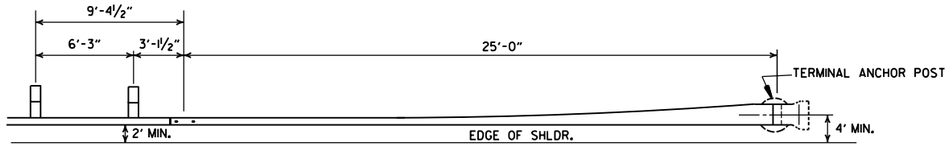

PLAN - GUARDRAIL TERMINAL (TYPE I)

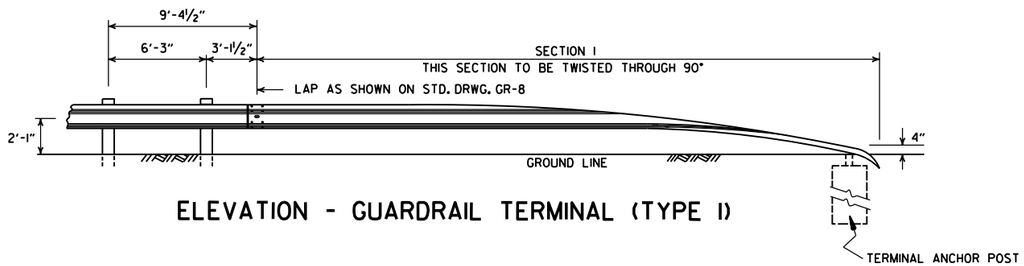

ELEVATION - GUARDRAIL TERMINAL (TYPE I)

NOTE:
SECTIONS 1 AND 2 OF GUARDRAIL TERMINAL
SHALL BE PAID FOR AT THE PRICE BID PER
LINEAR FOOT OF THE TYPE OF GUARDRAIL SPECIFIED.

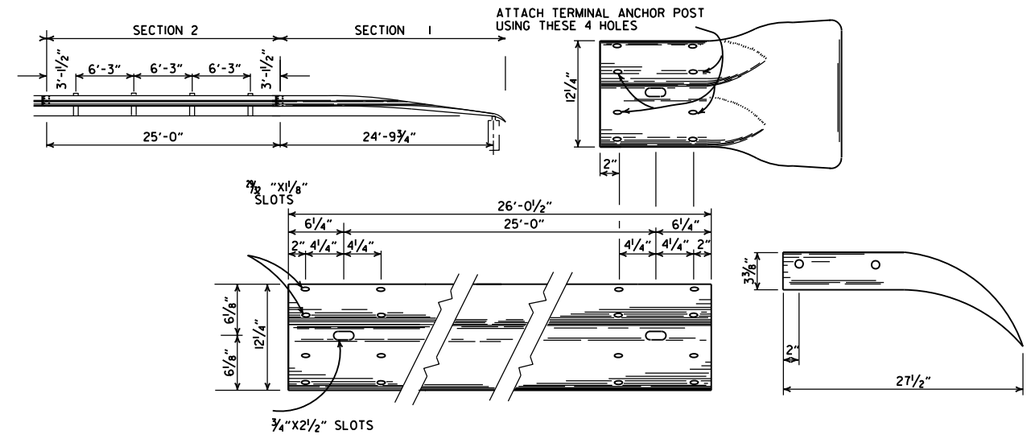

SECTION 1

TERMINAL SECTION

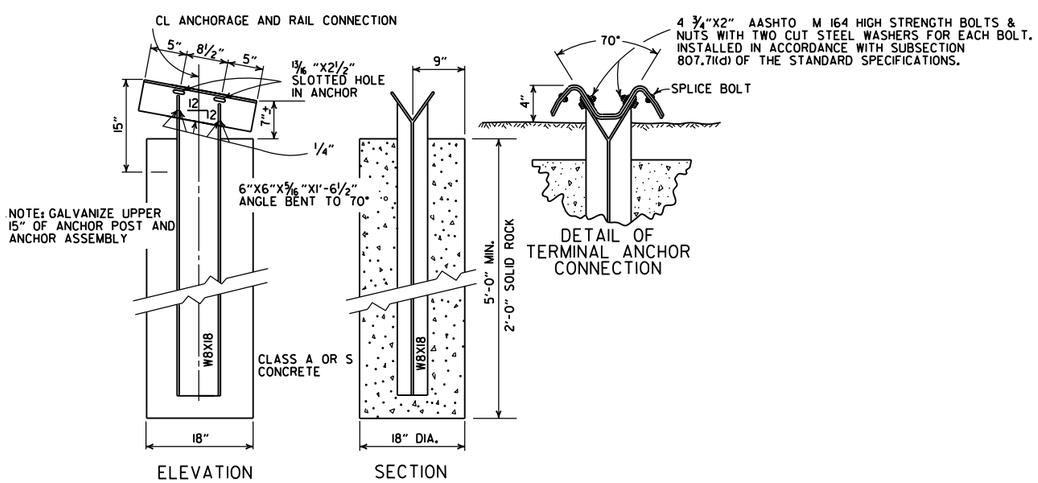

NOTE: RAIL MEMBERS MAY BE BOLTED TO ANGLE AT TERMINAL ANCHOR AND THE TWO ASSEMBLIES POSITIONED TO PROPER ALIGNMENT PRIOR TO PLACING CONCRETE AROUND 8 WF 17 POST IF CONTRACTOR SO DESIRES.

DETAIL OF TERMINAL ANCHOR POST (TYPE I)

DATE	REVISION	FILMED
11-07-19	RENAMED & REVISED REFERENCE.	
11-16-17	REVISED GUARDRAIL HEIGHT AND LOCATION OF POSTS	
07-14-10	RAISED HEIGHT OF GUARDRAIL 1"	
06-26-97	REVISED LAP NOTE	
10-18-96	REVISED ASTM REF. TO AASHTO	
11-03-94	DIMENSION TERMINAL DETAIL	
11-11-92	ADDED NOTE FOR PAYMENT	11-11-92
10-01-92	DRAWN & ISSUED	10-1-92

ARKANSAS STATE HIGHWAY COMMISSION

GUARDRAIL DETAILS

STANDARD DRAWING GRT-1

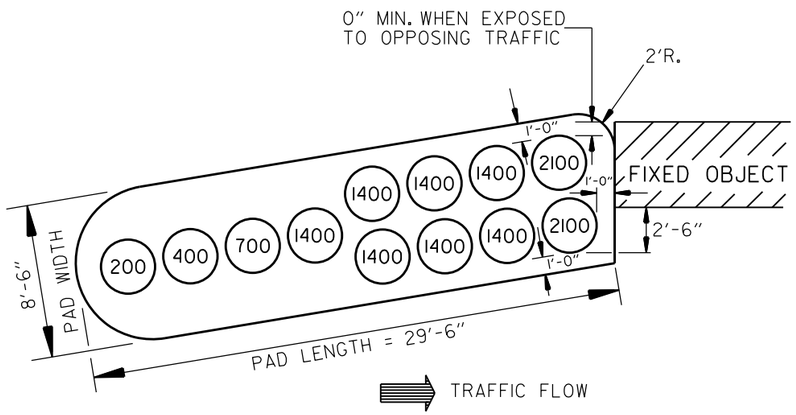

(TYPE C)

BARRIER LENGTH = 27'-6"
DESIGN IMPACT SPEED = 50 M.P.H.= 73.3 fps

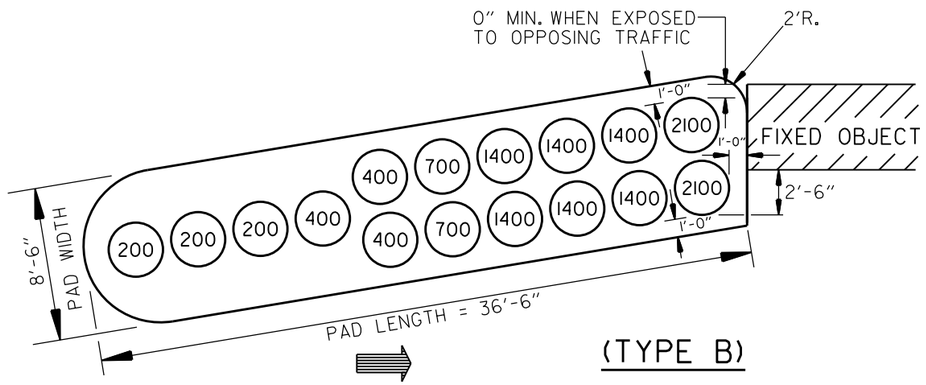

(TYPE B)

BARRIER LENGTH = 34'-6"
DESIGN IMPACT SPEED = 60 M.P.H.= 88 fps

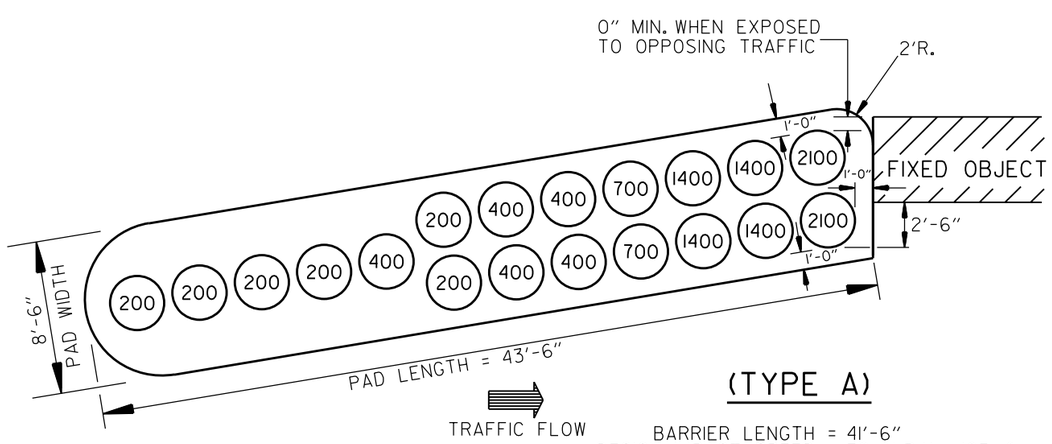

(TYPE A)

BARRIER LENGTH = 41'-6"
DESIGN IMPACT SPEED = 70 M.P.H.= 103 fps

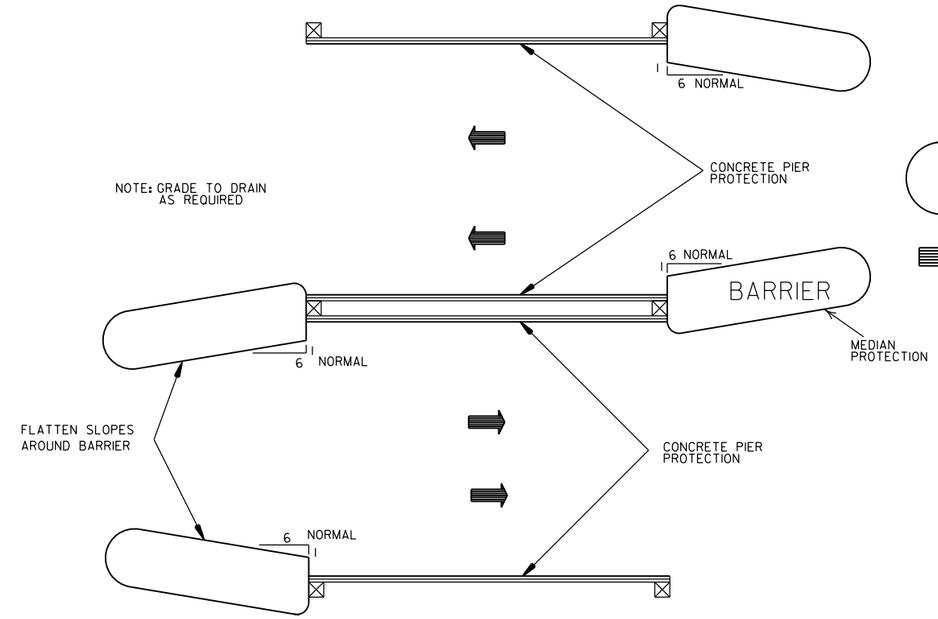

METHOD OF INSTALLATION OF IMPACT ATTENUATION BARRIER FOR PIER PROTECTION

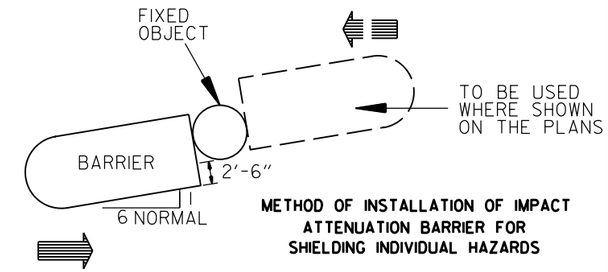

METHOD OF INSTALLATION OF IMPACT ATTENUATION BARRIER FOR SHIELDING INDIVIDUAL HAZARDS

GENERAL NOTES

1. DIMENSIONS SHOWN ARE TO TOP OF PLASTIC MODULES.
2. SPACING BETWEEN PLASTIC MODULES SHALL NOT EXCEED 6" AT THE TOP.
3. PLASTIC MODULES SHALL MEET THE REQUIREMENTS OF NCHRP-350 OR MANUAL FOR ASSESSING SAFETY HARDWARE (MASH).

APPROXIMATE QUANTITIES PER PAD

TYPE	ALTERNATE #1		ALTERNATE #2
	AGGR. BASE COURSE	A.C.H.M. SURFACE COURSE	P.C.CONC. BASE (4"U.T.)
	TONS	TONS	SQ.YDS.
A	9.7	4.6	41.6
B	8.1	3.8	34.9
C	6.6	3.1	28.3

NOTE: APPROXIMATE QUANTITIES SHOWN ARE FOR INFORMATIONAL PURPOSES ONLY. PAYMENT TO BE INCLUDED IN UNIT PRICE BID FOR IMPACT ATTENUATION BARRIER.

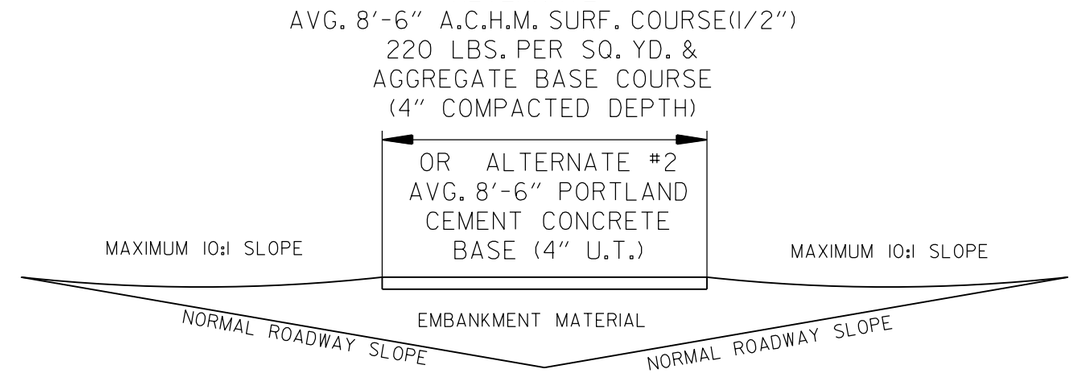

DETAIL OF BARRIER PAD

NOTE: BARRIER PAD TO BE SKEWED TOWARD ONCOMING TRAFFIC A MAXIMUM OF 6:1 WITH 6:1 BEING NORMAL

DATE	REVISION	DATE FILMED
10-15-09	ADDED REFERENCE TO MASH	
11-29-07	REVISED TY. A & TY. C ARRAYS	
11-19-98	REVISED FIXED OBJECT	
11-18-98	REV. NOTES & TYPE A MOD. WTS.	
10-18-96	REDRAWN	
7-15-88	CONFORMED TO 1988 SPECS	
7-29-87	REDRAWN	

ARKANSAS STATE HIGHWAY COMMISSION

IMPACT ATTENUATION BARRIER

STANDARD DRAWING IB-1

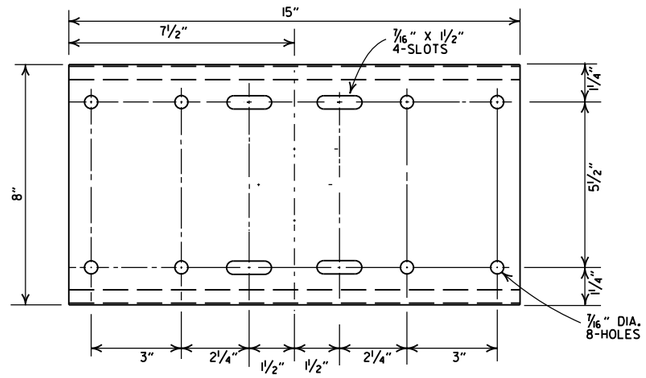

SHELF

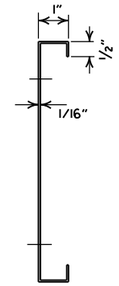

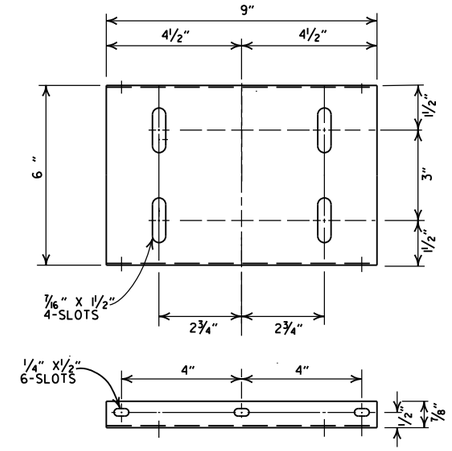

PLATFORM

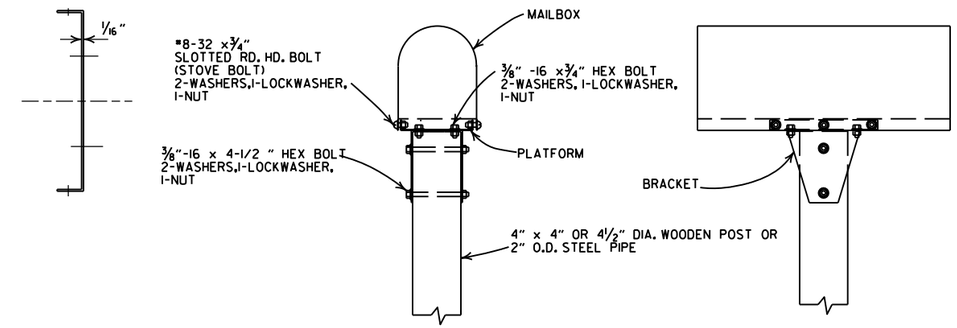

SINGLE INSTALLATION

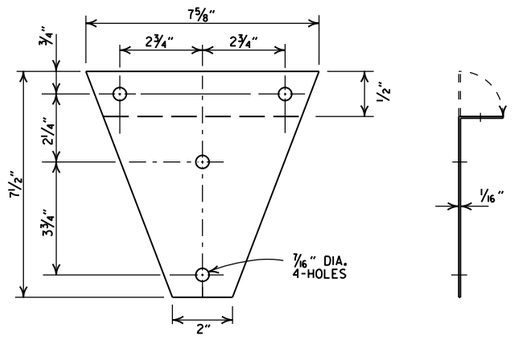

BRACKET

GENERAL NOTES

1. MAILBOX POSTS MAY BE WOOD OR METAL. WOOD POSTS SHALL BE PRESSURE TREATED FOR GROUND CONTACT IN ACCORDANCE WITH SECTION 637.02 OF THE STANDARD SPECIFICATIONS.
2. ANTI-TWIST PLATES SHALL BE USED ONLY ON METAL POSTS.
3. MAILBOX SHELF, BRACKET & PLATFORM SHALL BE GALVANIZED OR PAINTED STEEL, HOWEVER TREATED WOOD MAY BE USED WITH WOODEN POSTS. THE WOODEN SHELF, BRACKET & PLATFORM SHALL BE A MINIMUM OF ¾" THICK AND SHALL BE ASSEMBLED WITH BOLTS OF THE APPROPRIATE LENGTH WITH SIX 8 X ¾" FLATHEAD WOOD SCREWS USED TO ATTACH THE MAILBOX TO THE PLATFORM.
4. THE MAILBOX SHELF AND PLATFORM THAT IS SHOWN IS FOR STANDARD SIZE MAILBOXES. THE SHELF AND PLATFORM SIZE SHALL BE MODIFIED TO FIT MAILBOXES OF A DIFFERENT SIZE.
5. METAL PIPE FOR MAILBOX SUPPORT SHALL BE 2" OUTSIDE DIAMETER STEEL WITH A WALL THICKNESS OF 0.145" AND A WEIGHT OF 2.72 LBS PER FT. OUTSIDE DIAMETER AND WEIGHT SHALL HAVE A TOLERANCE OF +/- 5% ACCORDING TO AASHTO M 181.
6. MAILBOX SUPPORT SYSTEM DIFFERING FROM THOSE SHOWN MAY BE USED, PROVIDED THEY ARE ON THE ARDOT QUALIFIED PRODUCTS LIST FOR MAILBOX SUPPORTS.

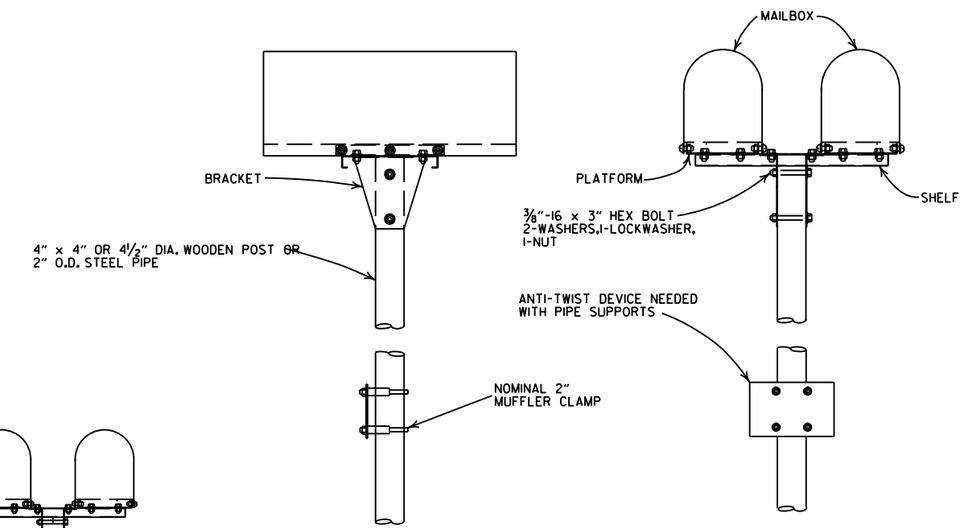

DOUBLE INSTALLATION

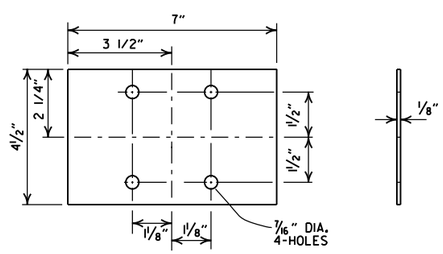

ANTI-TWIST PLATE

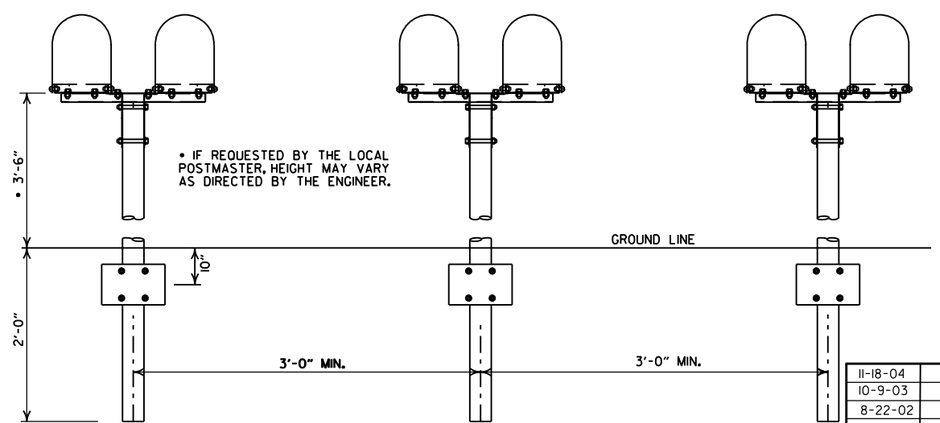

SPACING FOR MULTIPLE POST INSTALLATION

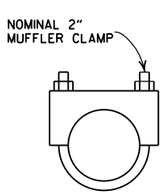

CLAMP

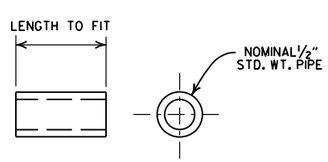

SPACER

DATE	FILMED	REVISION
11-18-04		REVISED NOTES
10-9-03		REVISED NOTE 6
8-22-02		REVISED NOTE 6
10-18-96		CORRECTED AASHTO
10-1-92		CORRECTED SPELLING
9-26-91		NEW PHONE NUMBER
8-15-91		ADDED NOTE
11-30-89		ADJUSTED HEIGHT & ADDED NOTE
2-16-89		DELETED SLOTS FROM SHELF & PLTF
11-17-88	10-1-92	ADJUSTED DIMENSIONS OF STEEL POSTS
7-15-88	20-7-15-88	ISSUED

ARKANSAS STATE HIGHWAY COMMISSION

MAILBOX DETAILS

STANDARD DRAWING MB-1

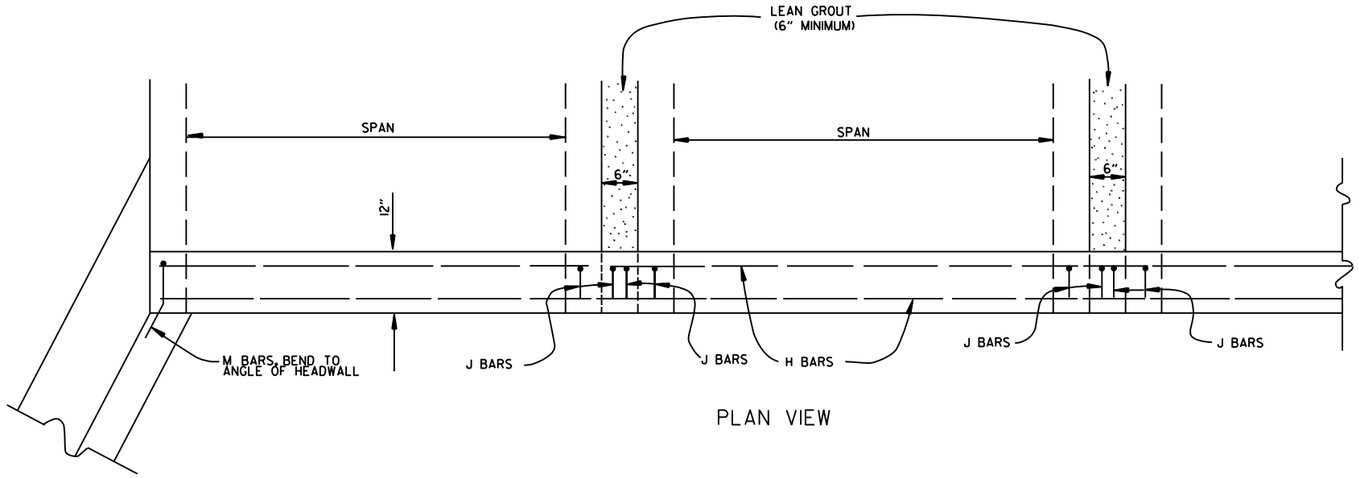

PLAN VIEW

BAR LIST

BAR	NO.	SIZE	LENGTH	BAR BENDING DIAGRAM
H	2	#4	•	
I	•	#4	•	
J	•	#4	1'-5"	
L	•	#4	3'-2"	
M	•	#4	1'-8"	

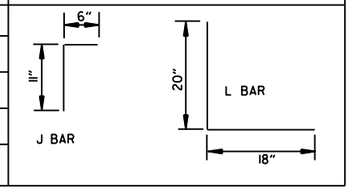

• NOTE: LENGTH AND NUMBER OF BARS VARIES WITH SIZE OF CULVERT

GENERAL NOTES

WINGS, CURTAIN WALLS AND APRONS SHALL BE TIED TO THE PRECAST CULVERT SECTION BY CASTING BARS IN CULVERT END SECTIONS AS SHOWN OR BY DOWELING AND GROUTING. J BARS AND M BARS SHALL BE EMBEDDED A MINIMUM OF 10" IN PRECAST BOX.

WINGS, FOOTINGS, APRONS AND CURTAIN WALLS SHALL BE CONSTRUCTED IN ACCORDANCE WITH THE APPLICABLE WING DRAWING. STEEL AND CONCRETE QUANTITIES WILL BE ADJUSTED TO FIT THE IN-PLACE WIDTH & HEIGHT OF THE PRECAST CONCRETE BOX CULVERTS.

ALL EXPOSED CORNERS TO HAVE ¾" CHAMFERS.

WINGWALLS AND FOOTINGS MAY BE ADJUSTED IN THE FIELD AS DIRECTED BY THE ENGINEER.

ALL CONCRETE, REINFORCING STEEL, LEAN GROUT, MEMBRANE WATERPROOFING, DRAINAGE FILL MATERIAL, GEOTEXTILE FILTER FABRIC, LABOR, MATERIALS AND EQUIPMENT REQUIRED FOR INSTALLING PRECAST BOX CULVERTS WILL NOT BE PAID FOR DIRECTLY BUT WILL BE CONSIDERED TO BE INCLUDED IN THE PRICE BID FOR THE ITEMS AS SPECIFIED IN SECTION 607 OF THE STANDARD SPECIFICATIONS.

LEAN GROUT SHALL CONSIST OF A SAND CEMENT MIXTURE MEETING THE FOLLOWING REQUIREMENTS:
PORTLAND CEMENT SHALL BE TYPE I AND SHALL MEET THE REQUIREMENTS OF AASHTO M 85.
SAND SHALL MEET THE REQUIREMENTS OF FINE AGGREGATE AS SPECIFIED IN SECTION 802.02 OF THE STANDARD SPECIFICATIONS.
THE SAND CEMENT MIXTURE SHALL CONSIST OF NOT LESS THAN 1.5 SACKS OF PORTLAND CEMENT PER TON OF MATERIAL MIXTURE.
THE MIXTURE SHALL CONTAIN SUFFICIENT WATER TO HYDRATE THE CEMENTS. THE SAND CEMENT MIXTURE SHALL BE PLACED IN MAXIMUM 8 INCH THICK LIFTS, LOOSE MEASURE, AND THOROUGHLY RODDED AND TAMPED AROUND BOX TO THOROUGHLY FILL ALL VOIDS.

MEMBRANE WATERPROOFING CONFORMING TO THE REQUIREMENTS OF SECTION 815 OF THE STANDARD SPECIFICATIONS SHALL BE APPLIED TO ALL BOX CULVERT JOINTS.

THE MEMBRANE WATERPROOFING WILL BE REQUIRED ON THE TOP EXTERNAL JOINT AND SHALL EXTEND 1 FOOT DOWN THE SIDES OF THE CULVERT.

IN OUTER BARRELS, ONE WEEP HOLE IS REQUIRED IN EXTERIOR WALLS OF EACH PRECAST CULVERT SECTION. WEEP HOLES SHALL HAVE A MAXIMUM HORIZONTAL SPACING OF 10'-0" IN THE ASSEMBLED CULVERT AND SHALL BE SPACED TO CLEAR ALL REINFORCING STEEL. THE DRAIN OPENING SHALL BE 4" DIAMETER AND SHALL BE PLACED 12" ABOVE THE TOP OF THE BOTTOM SLAB.

DRAINAGE FILL MATERIAL WITH GEOTEXTILE FABRIC IS REQUIRED AT THE EXTERIOR WALLS OF THE ASSEMBLED CULVERT, SEE DETAILS ON THIS DRAWING.

MINIMUM WIDTH SHALL BE 12" (6" ON EACH SIDE OF JOINT). ON MULTIPLE BARREL CULVERTS, MEMBRANE WATERPROOFING SHALL BE APPLIED TO EACH BARREL AS DESCRIBED ABOVE.

WITH THE APPROVAL OF THE ENGINEER, THE CONTRACTOR WILL BE ALLOWED TO SUBSTITUTE, AT NO ADDITIONAL COST TO THE DEPARTMENT, FLOWABLE SELECT MATERIAL CONFORMING TO SECTION 206 OF THE STANDARD SPECIFICATIONS IN LIEU OF LEAN GROUT.

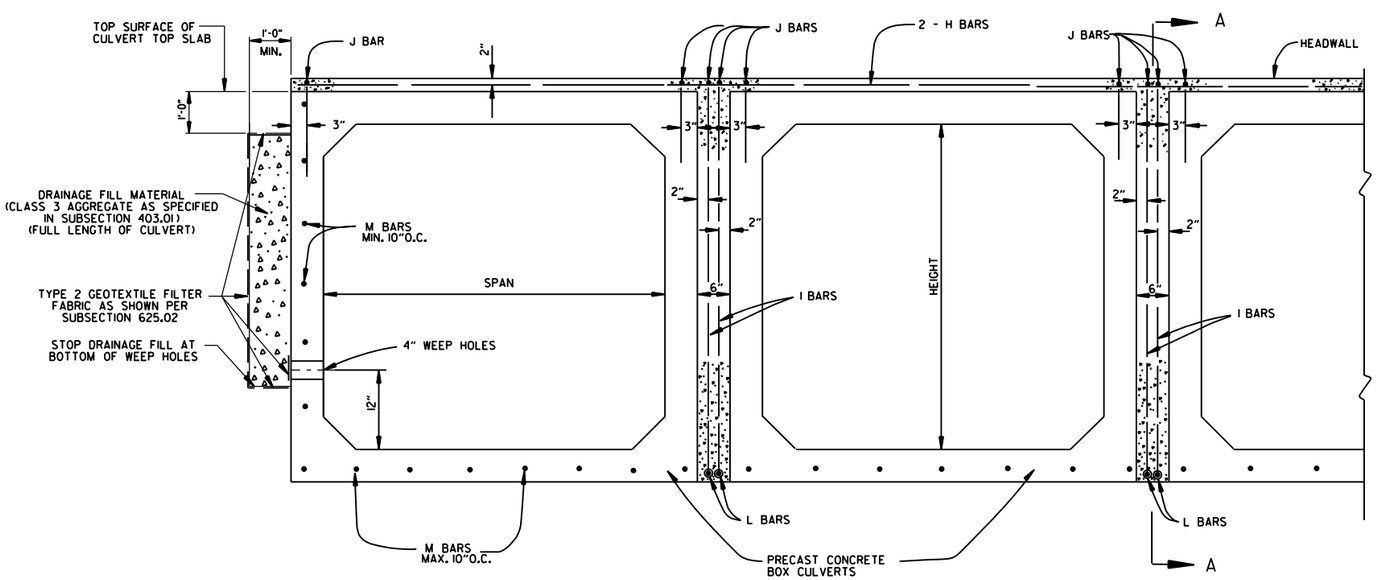

END VIEW

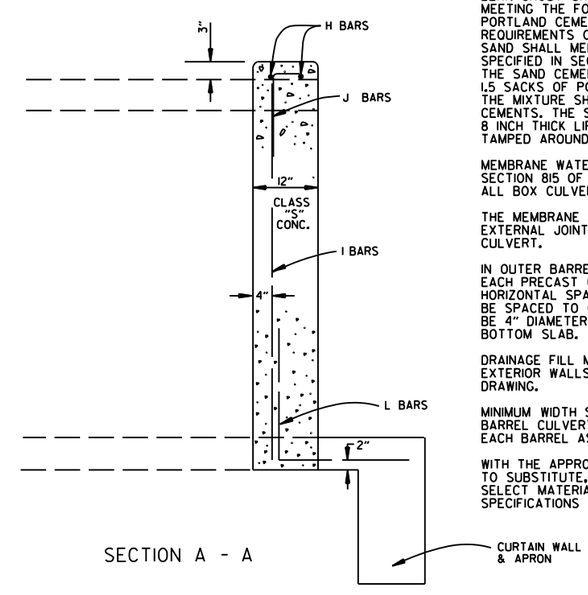

SECTION A - A

DATE	REVISION	DATE FILMED
1-28-15	REVISED GEOTEXTILE FABRIC PLACEMENT	
12-15-11	ADDED NOTE & DTLS FOR WEEP HOLE AND DRAINAGE FILL	
10-15-09	ADDED GENERAL NOTE	
11-10-05	REVISED SPACING OF "M" BARS	
4-10-03	REVISED GENERAL NOTES	
10-18-96	CORRECTED AASHTO REF.	
10-1-92	ADDED NOTE FOR MEMBRANE WATERPROOFING	
8-15-91	ADDED NOTE FOR LEAN GROUT	
11- 8-90	REVISED FOR 1991 SPECS	
11-30-89	ISSUED: JABE	

ARKANSAS STATE HIGHWAY COMMISSION

PRECAST CONCRETE BOX CULVERTS

STANDARD DRAWING PBC-1

REINFORCED CONCRETE ARCH PIPE DIMENSIONS

EQUIV. DIA.	SPAN		RISE	
	AASHTO M 206	ARDOT NOMINAL	AASHTO M 206	ARDOT NOMINAL
INCHES	INCHES			
15	18	18	11	11
18	22	22	13½	14
21	26	26	15½	16
24	28½	29	18	18
30	36¼	36	22½	23
36	43⅜	44	26⅝	27
42	51⅛	51	31⅝	31
48	58½	59	36	36
54	65	65	40	40
60	73	73	45	45
72	88	88	54	54
84	102	102	62	62
90	115	115	72	72
96	122	122	77½	77
108	138	138	87⅛	87
120	154	154	96⅞	97
132	168¾	169	106½	107

THE MEASURED SPAN AND RISE SHALL NOT VARY MORE THAN ± 2 PERCENT FROM THE VALUES SPECIFIED BY AASHTO M206.

REINFORCED CONCRETE HORIZONTAL ELLIPTICAL PIPE DIMENSIONS

EQUIV. DIA.	AASHTO M 207	
	SPAN	RISE
INCHES	INCHES	
18	23	14
24	30	19
27	34	22
30	38	24
33	42	27
36	45	29
39	49	32
42	53	34
48	60	38
54	68	43
60	76	48
66	83	53
72	91	58
78	98	63
84	106	68

THE MEASURED SPAN AND RISE SHALL NOT VARY MORE THAN ± 2 PERCENT FROM THE VALUES SPECIFIED BY AASHTO M207.

CONSTRUCTION SEQUENCE

1. PLACE STRUCTURAL BEDDING MATERIAL TO GRADE. DO NOT COMPACT.
2. INSTALL PIPE TO GRADE.
3. COMPACT STRUCTURAL BEDDING OUTSIDE THE MIDDLE THIRD OF THE PIPE.
4. PLACE AND COMPACT THE HAUNCH AREA UP TO THE MIDDLE OF THE PIPE.
5. COMPLETE BACKFILL ACCORDING TO SUBSECTION 606.03.(f)(1).

NOTE: HAUNCH AND STRUCTURAL BEDDING MATERIAL WILL NOT BE PAID FOR SEPARATELY, BUT COMPENSATION WILL BE CONSIDERED TO BE INCLUDED IN THE PRICE BID PER LINEAR FOOT OF CONCRETE PIPE.

- LEGEND -

D_1 = NORMAL INSIDE DIAMETER OF PIPE
D_O = OUTSIDE DIAMETER OF PIPE
H = FILL COVER HEIGHT OVER PIPE (FEET)
MIN. = MINIMUM
= UNDISTURBED SOIL

INSTALLATION TYPE	MATERIAL REQUIREMENTS FOR HAUNCH AND STRUCTURAL BEDDING
TYPE 1	AGGREGATE BASE COURSE (CLASS 5 OR CLASS 7)
TYPE 2	SELECTED MATERIALS (CLASS SM-1, SM-2, OR SM-4) OR TYPE 1 INSTALLATION MATERIAL*
TYPE 3**	AASHTO CLASSIFICATION A-1 THRU A-6 SOIL OR TYPE 1 OR 2 INSTALLATION MATERIAL

* SM-3 WILL NOT BE ALLOWED.

** MATERIALS SHALL NOT INCLUDE ORGANIC MATERIALS OR STONES LARGER THAN 3 INCHES.

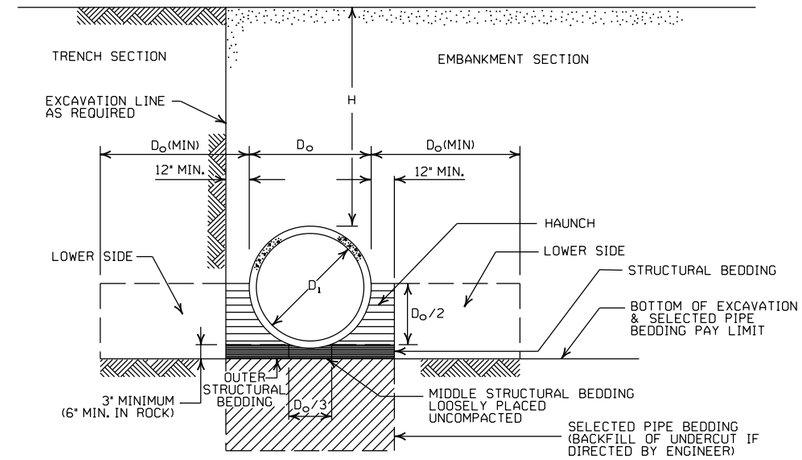

EMBANKMENT AND TRENCH INSTALLATIONS

1. MATERIAL IN THE HAUNCH AND OUTER STRUCTURAL BEDDING SHALL BE COMPACTED TO 95% OF THE MAXIMUM DENSITY ACCORDING TO THE TYPE OR CLASS OF MATERIAL USED.
2. FOR TRENCHES WITH WALLS OF NATURAL SOIL, THE DENSITY OF THE SOIL IN THE LOWER SIDE ZONE SHALL BE AS FIRM AS THE 95% DENSITY REQUIRED FOR THE HAUNCH. IF THE EXISTING SOIL DOES NOT MEET THIS CRITERIA, IT SHALL BE REMOVED AND RECOMPACTED TO 95% OF THE MAXIMUM DENSITY ACCORDING TO THE TYPE OF MATERIAL USED.
3. FOR EMBANKMENTS, THE MATERIAL IN THE LOWER SIDE ZONE SHALL BE COMPACTED TO 95% OF THE MAXIMUM DENSITY ACCORDING TO THE TYPE OR CLASS OF MATERIAL USED.

MINIMUM HEIGHT OF FILL "H" OVER CIRCULAR R.C. PIPE CULVERTS

	CLASS OF PIPE			
	CLASS III		CLASS IV	CLASS V
INSTALLATION TYPE	TYPE 1 OR 2	TYPE 3	ALL	ALL
PIPE ID (IN.)	FEET			
12-15	2	2.5	2	1
18-24	2.5	3	2	1
27-33	3	4	2	1
36-42	3.5	5	2	1
48	4.5	5.5	2	1
54-60	5	7	2	1
66-78	6	8	2	1
84-108	7.5	8	2	1

NOTE: FOR MINIMUM COVER VALUES, "H" SHALL INCLUDE A MINIMUM OF 12" OF PAVEMENT AND/OR BASE.

MAXIMUM HEIGHT OF FILL "H" OVER CIRCULAR R.C. PIPE CULVERTS

INSTALLATION TYPE	CLASS OF PIPE		
	CLASS III	CLASS IV	CLASS V
	FEET		
TYPE 1	21	32	50
TYPE 2	16	25	39
TYPE 3	12	20	30

NOTE: IF FILL HEIGHT EXCEEDS 50 FEET, A SPECIAL DESIGN CONCRETE PIPE WILL BE REQUIRED USING TYPE 1 INSTALLATION.

MINIMUM HEIGHT OF FILL "H" OVER R.C. ARCH & HORIZONTAL ELLIPTICAL PIPE CULVERTS

INSTALLATION TYPE	CLASS OF PIPE	
	CLASS III	CLASS IV
	FEET	
TYPE 2 OR TYPE 3	2.5	1.5

NOTE: TYPE 1 INSTALLATION WILL NOT BE ALLOWED FOR ARCH & HORIZONTAL ELLIPTICAL PIPE CULVERTS.

NOTE: FOR MINIMUM COVER VALUES, "H" SHALL INCLUDE A MINIMUM OF 12" OF PAVEMENT AND/OR BASE.

MAXIMUM HEIGHT OF FILL "H" OVER R.C. ARCH & HORIZONTAL ELLIPTICAL PIPE CULVERTS

INSTALLATION TYPE	CLASS OF PIPE	
	CLASS III	CLASS IV
	FEET	
TYPE 2	13	21
TYPE 3	10	16

NOTE: TYPE 1 INSTALLATION WILL NOT BE ALLOWED FOR ARCH & HORIZONTAL ELLIPTICAL PIPE CULVERTS.

GENERAL NOTES

1. CONCRETE PIPE CULVERT CONSTRUCTION SHALL CONFORM TO ARKANSAS DEPARTMENT OF TRANSPORTATION STANDARD SPECIFICATIONS FOR HIGHWAY CONSTRUCTION (CURRENT EDITION), WITH APPLICABLE SUPPLEMENTAL SPECIFICATIONS AND SPECIAL PROVISIONS. UNLESS OTHERWISE NOTED IN THE PLANS, SECTION AND SUBSECTION REFER TO THE STANDARD CONSTRUCTION SPECIFICATIONS.
2. CONCRETE PIPE CULVERT DESIGN SHALL CONFORM TO AASHTO LRFD BRIDGE DESIGN SPECIFICATIONS, FIFTH EDITION (2010) WITH 2010 INTERIMS.
3. ALL PIPE SHALL CONFORM TO SECTION 606. CIRCULAR R.C. PIPE CULVERTS SHALL CONFORM TO AASHTO M170. R.C. ARCH PIPE CULVERTS SHALL CONFORM TO AASHTO M206 AND HORIZONTAL ELLIPTICAL PIPE CULVERTS SHALL CONFORM TO AASHTO M207.
4. ALL PIPE SHALL BE PROTECTED DURING CONSTRUCTION BY A COVER SUFFICIENT TO PREVENT DAMAGE FROM PASSAGE OF EQUIPMENT.
5. THE MINIMUM TRENCH WIDTH SHALL BE THE OUTSIDE DIAMETER OF THE PIPE PLUS 24 INCHES. THE MAXIMUM ALLOWABLE TRENCH WIDTH SHALL BE THE MINIMUM WIDTH PRACTICABLE FOR WORKING CONDITIONS.
6. MULTIPLE PIPE CULVERTS SHALL BE INSTALLED WITH A MINIMUM CLEARANCE OF 24 INCHES BETWEEN STRINGS OF PIPE. REFER TO STD. DWG. FES-2 FOR MINIMUM CLEARANCE WHERE FLARED END SECTIONS ARE USED.
7. IMPERVIOUS MATERIAL SHOULD BE PLACED AS DIRECTED BY THE ENGINEER AT THE ENDS OF THE CULVERT TO PREVENT LOSS OF STRUCTURAL BEDDING WHEN PERVIOUS MATERIAL IS USED FOR STRUCTURAL BEDDING AND/OR BACKFILL.
8. NOT MORE THAN ONE LIFTING HOLE MAY BE PROVIDED IN CONCRETE PIPE TO FACILITATE HANDLING. HOLE MAY BE CAST IN PLACE, CUT INTO THE FRESH CONCRETE AFTER FORMS ARE REMOVED, OR DRILLED. THE HOLE SHALL NOT BE MORE THAN TWO INCHES IN DIAMETER OR TWO INCHES SQUARE. CUTTING OR DISPLACEMENT OF REINFORCEMENT WILL NOT BE PERMITTED. SPALLED AREAS AROUND THE HOLE SHALL BE REPAIRED IN A WORKMANLIKE MANNER. LIFTING HOLE SHALL BE FILLED WITH MORTAR, CONCRETE, OR OTHER METHOD AS APPROVED BY THE ENGINEER.
9. WHEN DIRECTED BY THE ENGINEER, UNSUITABLE MATERIAL THAT IS ENCOUNTERED AT THE BOTTOM OF THE EXCAVATED TRENCH (BELOW THE AREA IDENTIFIED AS "STRUCTURAL BEDDING" ABOVE) WILL BE EXCAVATED AND REPLACED WITH SELECTED PIPE BEDDING. THE QUANTITY OF MATERIAL REQUIRED TO BACKFILL THE UNDERCUT AREA UP TO THE SELECTED PIPE BEDDING PAY LIMIT DESIGNATED ABOVE WILL BE MEASURED AND PAID FOR AS "SELECTED PIPE BEDDING."
10. WHEN THE EXISTING MATERIAL EXCAVATED FOR THE PIPE TRENCH IS DETERMINED BY THE ENGINEER TO BE UNSUITABLE FOR BACKFILLING THE PIPE (ABOVE THE AREA IDENTIFIED ABOVE AS THE HAUNCH), BORROW MATERIAL OR MATERIAL FROM THE ROADWAY EXCAVATION WILL BE USED TO BACKFILL THE PIPE. IF SUITABLE MATERIAL IS NOT AVAILABLE, THE ENGINEER MAY AUTHORIZE THE USE OF "SELECTED PIPE BACKFILL."

DATE	REVISION	DATE FILMED
2-27-14	REVISED GENERAL NOTE 1.	
12-15-11	REVISED FOR LRFD DESIGN SPECIFICATIONS	
5-18-00	REVISED TYPE 3 BEDDING & ADDED NOTE	
3-30-00	REVISED INSTALLATIONS	
11-06-97	ISSUED	

ARKANSAS STATE HIGHWAY COMMISSION

CONCRETE PIPE CULVERT FILL HEIGHTS & BEDDING

STANDARD DRAWING PCC-1

CORRUGATED STEEL PIPE (ROUND)

PIPE DIAMETER (INCHES)	① MINUMUM COVER TOP OF PIPE TO TOP OF GROUND "H" (FEET)	MAX. FILL HEIGHT "H" ABOVE TOP OF PIPE (FEET)				
		METAL THICKNESS (INCHES)				
		0.064	0.079	0.109	0.138	0.168
2⅔ INCH BY ½ INCH CORRUGATION RIVETED, WELDED, OR HELICAL LOCK-SEAM						
12	1	84	91			
15	1	67	73			
18	1	56	61			
24	1	42	46	59		
30	2	34	36	47		
36	2		30	39	41	
42	2		43	67	70	73
48	2		37	58	61	64
② 3 INCH BY 1 INCH OR 5 INCH BY 1 INCH CORRUGATION RIVETED, WELDED, BOLTED, OR HELICAL LOCK-SEAM						
36	1	48	60	88	111	118
42	1	41	51	72	90	102
48	1	36	45	64	77	85
54	2	32	40	59	71	79
60	2	29	36	53	64	71
66	2	26	33	47	58	64
72	2	24	30	44	53	59
78	2		28	41	49	54
84	2		26	38	45	51
90	2		24	35	43	45
96	2		22	33	40	44
102	2			31	38	42
108	2			30	35	39
114	2			28	34	37
120	2			27	32	35

CORRUGATED ALUMINUM PIPE (ROUND)

PIPE DIAMETER (INCHES)	① MINUMUM COVER TOP OF PIPE TO TOP OF GROUND "H" (FEET)	MAX. FILL HEIGHT "H" ABOVE TOP OF PIPE (FEET)				
		METAL THICKNESS IN INCHES				
		0.060	0.075	0.105	0.135	0.164
		2 ⅔ INCH BY ½ INCH CORRUGATION RIVETED OR HELICAL LOCK-SEAM				
12	1	45	45			
18	2	30	30	52		
24	2	22	22	39	41	
30	2		18	31	32	34
36	2.5		15	26	27	28
42	2			43	43	44
48	2			40	41	43
54	2			35	37	38
60	2				33	34
66	2					31
72	2					29

CORRUGATED METAL PIPE ARCHES

EQUIV. DIA. (INCHES)	PIPE DIMENSION SPAN X RISE (INCHES)	MINUMUM CORNER RADIUS (INCHES)	STEEL				ALUMINUM		
			MIN. THICKNESS REQUIRED INCHES	① MIN. HEIGHT OF FILL, "H" (FT.)		MAX. HEIGHT OF FILL, "H" (FT.)	MIN. THICKNESS REQUIRED INCHES	① MIN. HEIGHT OF FILL, "H" (FT.)	MAX. HEIGHT OF FILL, "H" (FT.)
				INSTALLATION		INSTALLATION		INSTALLATION	INSTALLATION
				TYPE 1		TYPE 1		TYPE 1	TYPE 1
			2 ⅔ INCH BY ½ INCH CORRUGATION RIVETED, WELDED, OR HELICAL LOCK-SEAM				2 ⅔ INCH BY ½ INCH CORRUGATION RIVETED OR HELICAL LOCK-SEAM		
15	17x13	3	0.064	2		15	0.060	2	15
18	21x15	3	0.064	2		15	0.060	2	15
21	24x18	3	0.064	2.25		15	0.060	2.25	15
24	28x20	3	0.064	2.5		15	0.075	2.5	15
30	35x24	3	0.079	3		12	0.075	3	12
36	42x29	3½	0.079	3		12	0.105	3	12
42	49x33	4	0.079	3		12	0.105	3	12
48	57x38	5	0.109	3		13	0.135	3	13
54	64x43	6	0.109	3		14	0.135	3	14
60	71x47	7	0.138	3		15	0.164	3	15
66	77x52	8	0.168	3		15			
72	83x57	9	0.168	3		15			
			② 3 INCH BY 1 INCH OR 5 INCH BY 1 INCH CORRUGATION RIVETED, WELDED, OR HELICAL LOCK-SEAM						
				INSTALLATION		INSTALLATION			
				TYPE 2	TYPE 1	TYPE 2 TYPE 1			
36	40x31	5	0.079	3	2	12 15			
42	46x36	6	0.079	3	2	13 15			
48	53x41	7	0.079	3	2	13 15			
54	60x46	8	0.079	3	2	13 15			
60	66x51	9	0.079	3	2	13 15			
66	73x55	12	0.079	3	2	15 15			
72	81x59	14	0.079	3	2	15 15			
78	87x63	14	0.079	3	2	15 15			
84	95x67	16	0.109	3	2	15 15			
90	103x71	16	0.109	3	2	15 15			
96	112x75	18	0.109	3	2	15 15			
102	117x79	18	0.109	3	2	15 15			
108	128x83	18	0.138	3	2	15 15			

CONSTRUCTION SEQUENCE

1. PLACE STRUCTURAL BEDDING MATERIAL TO GRADE. DO NOT COMPACT.
2. INSTALL PIPE TO GRADE.
3. COMPACT STRUCTURAL BEDDING OUTSIDE THE MIDDLE THIRD OF THE PIPE.
4. COMPLETE STRUCTURAL BACKFILL OPERATION BY WORKING FROM SIDE TO SIDE OF THE PIPE. THE SIDE TO SIDE STRUCTURAL BACKFILL DIFFERENTIAL SHALL NOT EXCEED 24 INCHES OR 1/3 THE SIZE OF THE PIPE, WHICHEVER IS LESS.

NOTE: STRUCTURAL BACKFILL AND STRUCTURAL BEDDING MATERIAL WILL NOT BE PAID FOR SEPARATELY, BUT COMPENSATION WILL BE CONSIDERED TO BE INCLUDED IN THE PRICE BID PER LINEAR FOOT OF METAL PIPE.

INSTALLATION TYPE	MATERIAL REQUIREMENTS FOR STRUCTURAL BACKFILL AND STRUCTURAL BEDDING
TYPE 1	AGGREGATE BASE COURSE (CLASS 4, 5, 6, OR 7)
TYPE 2	SELECTED MATERIALS (CLASS SM-1, SM-2, OR SM-4) OR TYPE 1 INSTALLATION MATERIAL ③

③ SM-3 WILL NOT BE ALLOWED.

EQUIVALENT METAL THICKNESSES AND GAUGES

METAL THICKNESS IN INCHES			GAUGE NUMBER
STEEL			
ZINC COATED	UNCOATED	ALUMINUM	
0.064	0.0598	0.060	16
0.079	0.0747	0.075	14
0.109	0.1046	0.105	12
0.138	0.1345	0.135	10
0.168	0.1644	0.164	8

- LEGEND -

D_o = OUTSIDE DIAMETER OF PIPE
MAX. = MAXIMUM
MIN. = MINIMUM
= STRUCTURAL BACKFILL MATERIAL
= UNDISTURBED SOIL
EQUIV. DIA. = EQUIVALENT DIAMETER
H = FILL COVER HEIGHT OVER PIPE (FEET)

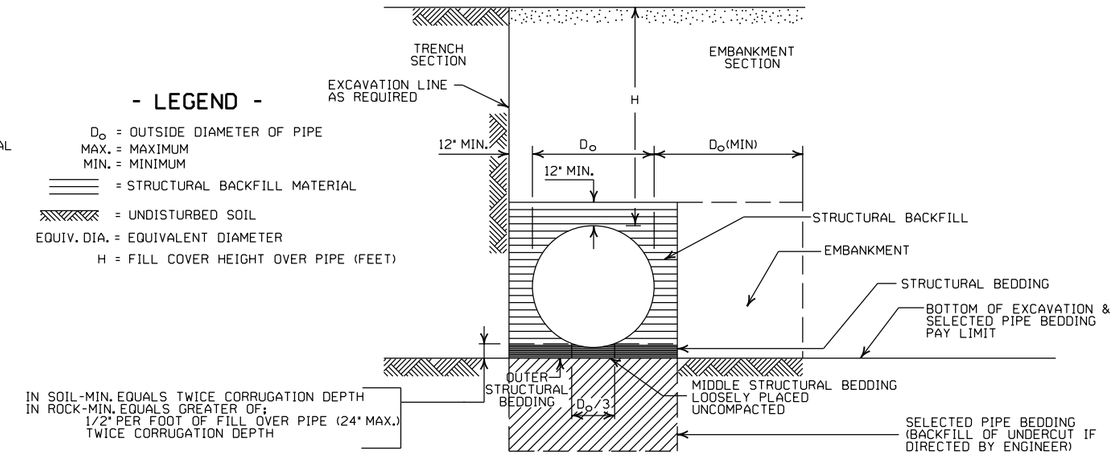

EMBANKMENT AND TRENCH INSTALLATIONS

1. STRUCTURAL BACKFILL, EMBANKMENT, AND OUTER STRUCTURAL BEDDING MATERIAL SHALL BE COMPACTED TO 95% OF THE MAXIMUM DENSITY ACCORDING TO THE TYPE OR CLASS OF MATERIAL USED.
2. INSTALLATION TYPE 1 OR 2 MAY BE USED FOR CORRUGATED STEEL OR ALUMINUM PIPE (ROUND).
3. INSTALALTION TYPE 1 SHALL BE USED FOR CORRUGATED STEEL OR ALUMINUM PIPE ARCHES WITH 2⅔" X ½" CORRUGATION.
4. INSTALLATION TYPE 1 OR 2 MAY BE USED FOR CORRUGATED STEEL OR ALUMINUM PIPE ARCHES WITH 3" X 1" OR 5" X 1" CORRUGATION.

GENERAL NOTES

1. METAL PIPE CULVERT CONSTRUCTION SHALL CONFORM TO ARKANSAS DEPARTMENT OF TRANSPORTATION STANDARD SPECIFICATIONS FOR HIGHWAY CONSTRUCTION (CURRENT EDITION), WITH APPLICABLE SUPPLEMENTAL SPECIFICATIONS AND SPECIAL PROVISIONS. UNLESS OTHERWISE NOTED IN THE PLANS, SECTION AND SUBSECTION REFER TO THE STANDARD CONSTRUCTION SPECIFICATIONS.
2. METAL PIPE CULVERT DESIGN SHALL CONFORM TO AASHTO LRFD BRIDGE DESIGN SPECIFICATIONS, FIFTH EDITION (2010) WITH 2010 INTERIMS.
3. METAL PIPE CULVERT MATERIALS AND INSTALLATIONS SHALL CONFORM TO SECTION 606 AND JOB SPECIAL PROVISION "METAL PIPE".
4. ALL PIPE SHALL BE PROTECTED DURING CONSTRUCTION BY A COVER SUFFICIENT TO PREVENT DAMAGE FROM PASSAGE OF EQUIPMENT.
5. THE MINIMUM TRENCH WIDTH SHALL BE THE OUTSIDE DIAMETER OF THE PIPE PLUS 24 INCHES. THE MAXIMUM ALLOWABLE TRENCH WIDTH SHALL BE THE MINIMUM WIDTH PRACTICABLE FOR WORKING CONDITIONS.
6. MULTIPLE PIPE CULVERTS SHALL BE INSTALLED WITH A MINIMUM CLEARANCE OF 24 INCHES BETWEEN STRINGS OF PIPE. REFER TO STD. DWG. FES-2 FOR MINIMUM CLEARANCE WHERE FLARED END SECTIONS ARE USED.
7. IMPERVIOUS MATERIAL SHOULD BE PLACED AS DIRECTED BY THE ENGINEER AT THE ENDS OF THE CULVERT TO PREVENT LOSS OF STRUCTURAL BEDDING WHEN PERVIOUS MATERIAL IS USED FOR STRUCTURAL BEDDING AND/OR BACKFILL.
8. WHEN DIRECTED BY THE ENGINEER, UNSUITABLE MATERIAL THAT IS ENCOUNTERED AT THE BOTTOM OF THE EXCAVATED TRENCH (BELOW THE AREA IDENTIFIED AS "STRUCTURAL BEDDING" ABOVE) WILL BE EXCAVATED AND REPLACED WITH SELECTED PIPE BEDDING. THE QUANTITY OF MATERIAL REQUIRED TO BACKFILL THE UNDERCUT AREA UP TO THE SELECTED PIPE BEDDING PAY LIMIT DESIGNATED ABOVE WILL BE MEASURED AND PAID FOR AS "SELECTED PIPE BEDDING."
9. WHEN THE EXISTING MATERIAL EXCAVATED FOR THE PIPE TRENCH IS DETERMINED BY THE ENGINEER TO BE UNSUITABLE FOR BACKFILLING THE PIPE (ABOVE THE AREA IDENTIFIED AS STRUCTURAL BACKFILL), BORROW MATERIAL OR MATERIAL FROM THE ROADWAY EXCAVATION WILL BE USED TO BACKFILL THE PIPE. IF SUITABLE MATERIAL IS NOT AVAILABLE, THE ENGINEER MAY AUTHORIZE THE USE OF "SELECTED PIPE BACKFILL."

① FOR MINIMUM COVER VALUES, "H" SHALL INCLUDE A MINIMUM 12" OF PAVEMENT AND/OR BASE.

② WHERE THE STANDARD 2 2/3"× ½" CORRUGATION AND GAUGE IS SPECIFIED FOR A GIVEN DIAMETER, A PIPE OF THE SAME DIAMETER WITH A 3" × 1" OR 5" × 1" CORRUGATION MAY BE SUBSTITUTED, PROVIDING IT IS GAUGED FOR A FILL HEIGHT CONDITION EQUAL TO OR GREATER THAN THE MAXIMUM FILL HEIGHT CONDITION FOR THE SPECIFIED GAUGE AND CORRUGATION.

DATE	REVISION	DATE FILMED
2-27-14	REVISED GENERAL NOTE 1.	
12-15-11	REVISED FOR LRFD DESIGN SPECS	
3-30-00	REVISED INSTALLATIONS	
11-06-97	ISSUED	

ARKANSAS STATE HIGHWAY COMMISSION

METAL PIPE CULVERT FILL HEIGHTS & BEDDING

STANDARD DRAWING PCM-1

INSTALLATION TYPE	•• MATERIAL REQUIREMENTS FOR STRUCTURAL BACKFILL AND STRUCTURAL BEDDING
TYPE 2	•SELECTED MATERIALS (CLASS SM-1, SM-2 OR SM-4)

• AGGREGATE BASE COURSE (CLASS 4, 5, 6, OR 7) MAY BE USED IN LIEU OF SELECTED MATERIAL.

SM3 WILL NOT BE ALLOWED.

•• STRUCTURAL BEDDING MATERIAL SHALL HAVE A MAXIMUM PARTICLE SIZE OF 1 INCH. STRUCTURAL BACKFILL MATERIAL SHALL BE FREE OF ORGANIC MATERIAL, STONES LARGER THAN 1.50 INCH IN GREATEST DIMENSION, OR FROZEN LUMPS.

STRUCTURAL BACKFILL AND STRUCTURAL BEDDING MATERIAL WILL NOT BE PAID FOR SEPARATELY, BUT COMPENSATION WILL BE CONSIDERED TO BE INCLUDED IN THE PRICE BID PER LINEAR FOOT OF HDPE PIPE.

MINIMUM TRENCH WIDTH BASED ON FILL HEIGHT "H"

PIPE DIAMETER	TRENCH WIDTH (FEET) "H" < 10'-0"	TRENCH WIDTH (FEET) "H" >OR= 10'-0"
18"	4'-6"	4'-6"
24"	5'-0"	6'-0"
30"	5'-6"	7'-6"
36"	6'-0"	9'-0"
42"	7'-0"	10'-6"
48"	8'-0"	12'-0"

①NOTE:
18" MIN. (18" - 30" DIAMETERS)
24" MIN. (36" - 48" DIAMETERS)

MINIMUM COVER VALUES, "H" SHALL INCLUDE A MINIMUM 12" OF PAVEMENT AND/OR BASE.

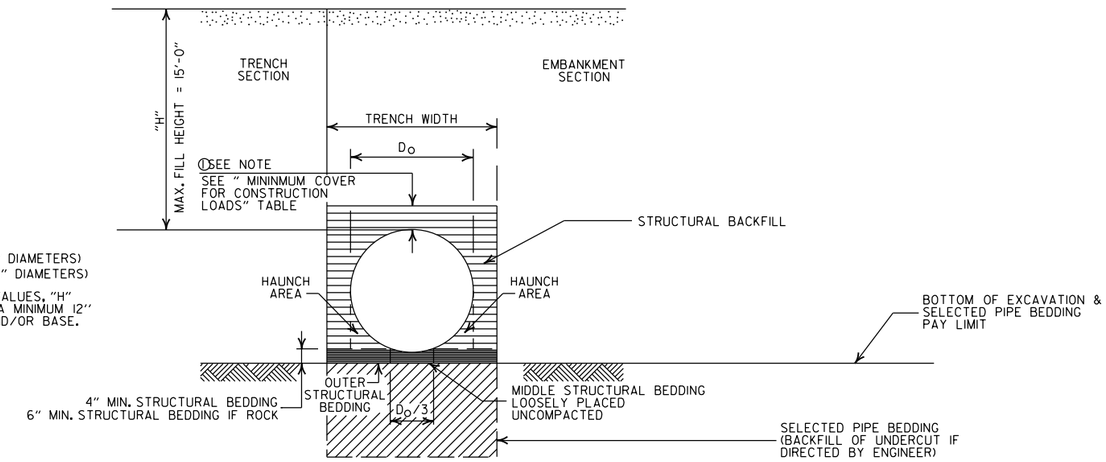

TYPE 2 EMBANKMENT AND TRENCH INSTALLATIONS

1. STRUCTURAL BACKFILL, EMBANKMENT, AND OUTER STRUCTURAL BEDDING MATERIAL SHALL BE COMPACTED TO 95% OF THE MAXIMUM DENSITY ACCORDING TO THE TYPE OR CLASS OF MATERIAL USED.

MULTIPLE INSTALLATION OF HIGH DENSITY POLYETHYLENE PIPES

PIPE DIAMETER	CLEAR DISTANCE BETWEEN PIPES
18"	1'-6"
24"	2'-0"
30"	2'-6"
36"	3'-0"
42"	3'-6"
48"	4'-0"

MINIMUM COVER FOR CONSTRUCTION LOADS

PIPE DIAMETER	② MIN. COVER (FEET) FOR INDICATED CONSTRUCTION LOADS 18.0-50.0 (KIPS)	50.0-75.0 (KIPS)	75.0-110.0 (KIPS)	110.0-175.0 (KIPS)
36" OR LESS	2'-0"	2'-6"	3'-0"	3'-0"
42" OR GREATER	3'-0"	3'-0"	3'-6"	4'-0"

②MINIMUM COVER SHALL BE MEASURED FROM TOP OF PIPE TO TOP OF THE MAINTAINED CONSTRUCTION ROADWAY SURFACE. THE SURFACE SHALL BE MAINTAINED.

CONSTRUCTION SEQUENCE

1. PLACE STRUCTURAL BEDDING MATERIAL TO GRADE. DO NOT COMPACT.
2. INSTALL PIPE TO GRADE.
3. COMPACT STRUCTURAL BEDDING OUTSIDE THE MIDDLE THIRD OF THE PIPE.
4. THE STRUCTURAL BACKFILL SHALL BE PLACED AND COMPACTED IN LAYERS NOT EXCEEDING 8". THE LAYERS SHALL BE BROUGHT UP EVENLY AND SIMULTANEOUSLY TO THE ELEVATION OF THE MINIMUM COVER.
5. PIPE INSTALLATION MAY REQUIRE THE USE OF RESTRAINTS, WEIGHTING OR OTHER APPROVED METHODS IN ORDER TO HELP MAINTAIN GRADE AND ALIGNMENT.

GENERAL NOTES

1. PIPE SHALL CONFORM TO AASHTO M294, TYPE S. INSTALLATION SHALL CONFORM TO JOB SPECIAL PROVISION "PLASTIC PIPE" AND SECTION 606 OF THE STANDARD SPECIFICIATIONS FOR HIGHWAY CONSTRUCTION (CURRENT EDITION).
2. PLASTIC PIPE CULVERT DESIGN SHALL CONFORM TO AASHTO LRFD BRIDGE DESIGN SPECIFICATIONS, FIFTH EDITION (2010) WITH 2010 INTERIMS.
3. THE MAXIMUM ALLOWABLE TRENCH WIDTH SHALL BE THE MINIMUM WIDTH PLUS A SUFFICIENT WIDTH TO ENSURE WORKING ROOM TO PROPERLY AND SAFELY PLACE AND COMPACT HAUNCHING AND OTHER BACKFILL MATERIAL.
4. IMPERVIOUS MATERIAL SHOULD BE PLACED AS DIRECTED BY THE ENGINEER AT THE ENDS OF THE CULVERT TO PREVENT LOSS OF STRUCTURAL BEDDING WHEN PERVIOUS MATERIAL IS USED FOR STRUCTURAL BEDDING AND/OR BACKFILL.
5. WHEN DIRECTED BY THE ENGINEER, UNSUITABLE MATERIAL THAT IS ENCOUNTERED AT THE BOTTOM OF THE EXCAVATED TRENCH (BELOW THE AREA IDENTIFIED AS "STRUCTURAL BEDDING" ABOVE) WILL BE EXCAVATED AND REPLACED WITH SELECTED PIPE BEDDING. THE QUANTITY OF MATERIAL REQUIRED TO BACKFILL THE UNDERCUT AREA UP TO THE SELECTED PIPE BEDDING PAY LIMIT DESIGNATED ABOVE WILL BE MEASURED AND PAID FOR AS "SELECTED PIPE BEDDING."
6. WHEN THE EXISTING MATERIAL EXCAVATED FOR THE PIPE TRENCH IS DETERMINED BY THE ENGINEER TO BE UNSUITABLE FOR BACKFILLING THE PIPE (ABOVE THE AREA IDENTIFIED ABOVE AS STRUCTURAL BACKFILL), BORROW MATERIAL OR MATERIAL FROM THE ROADWAY EXCAVATION WILL BE USED TO BACKFILL THE PIPE. IF SUITABLE MATERIAL IS NOT AVAILABLE, THE ENGINEER MAY AUTHORIZE THE USE OF "SELECTED PIPE BACKFILL."
7. FOR PIPE TYPES THAT ARE NOT SMOOTH ON THE OUTSIDE (CORRUGATED OR PROFILE WALLS), BACKFILL GRADATIONS SHOULD BE SELECTED THAT WILL PERMIT THE FILLING OF THE CORRUGATION OR PROFILE VALLEY.
8. HIGH DENSITY POLYETHYLENE PIPES OF DIAMETERS OTHER THAN SHOWN WILL NOT BE ALLOWED.
9. JOINTS FOR HDPE PIPE SHALL MEET THE REQUIREMENTS FOR SOIL TIGHTNESS AS SPECIFIED IN AASHTO SECTION 26.4.2.4 AND 30.4.2 "AASHTO LRFD BRIDGE CONSTRUCTION SPECIFICATIONS." JOINTS SHALL BE INSTALLED PER MANUFACTURER'S RECOMMENDATIONS.

- LEGEND -

H = FILL HEIGHT (FT.)
Ø = OUTSIDE DIAMETER OF PIPE
MAX. = MAXIMUM
MIN. = MINIMUM

= STRUCTURAL BACKFILL MATERIAL

= UNDISTURBED SOIL

DATE	REVISION	DATE FILMED
2-27-14	REVISED GENERAL NOTE 1.	
12-15-11	REVISED GENERAL NOTES & MINIMUM COVER NOTE	
11-17-10	ISSUED	

ARKANSAS STATE HIGHWAY COMMISSION

PLASTIC PIPE CULVERT (HIGH DENSITY POLYETHYLENE)

STANDARD DRAWING PCP-1

INSTALLATION TYPE	•• MATERIAL REQUIREMENTS FOR STRUCTURAL BACKFILL AND STRUCTURAL BEDDING
TYPE 2	•SELECTED MATERIALS (CLASS SM-1, SM-2, OR SM-4)

• AGGREGATE BASE COURSE (CLASS 4, 5, 6, OR 7) MAY BE USED IN LIEU OF SELECTED MATERIAL.

SM3 WILL NOT BE ALLOWED.

•• STRUCTURAL BEDDING MATERIAL SHALL HAVE A MAXIMUM PARTICLE SIZE OF 1INCH. STRUCTURAL BACKFILL MATERIAL SHALL BE FREE OF ORGANIC MATERIAL, STONES LARGER THAN 1.50 INCH IN GREATEST DIMENSION, OR FROZEN LUMPS.

STRUCTURAL BACKFILL AND STRUCTURAL BEDDING MATERIAL WILL NOT BE PAID FOR SEPARATELY, BUT COMPENSATION WILL BE CONSIDERED TO BE INCLUDED IN THE PRICE BID PER LINEAR FOOT OF PVC PIPE.

MINIMUM TRENCH WIDTH BASED ON FILL HEIGHT "H"

PIPE DIAMETER	TRENCH WIDTH (FEET) "H" < 10'-0"	TRENCH WIDTH (FEET) "H" >OR= 10'-0"
18"	4'-6"	4'-6"
24"	5'-0"	6'-0"
30"	5'-6"	7'-6"
36"	6'-0"	9'-0"

MULTIPLE INSTALLATION OF PVC PIPES

PIPE DIAMETER	CLEAR DISTANCE BETWEEN PIPES
18"	1'-6"
24"	2'-0"
30"	2'-6"
36"	3'-0"

MAXIMUM FILL HEIGHT BASED ON STRUCTURAL BACKFILL

PIPE DIAMETER	"H"
18"	45'-0"
24"	45'-0"
30"	40'-0"
36"	40'-0"

① NOTE:
12" MIN. (18" - 36" DIAMETERS)
MINIMUM COVER VALUE, "H" SHALL INCLUDE A MINIMUM 12" OF PAVEMENT AND/OR BASE.

MINIMUM COVER FOR CONSTRUCTION LOADS

PIPE DIAMETER	② MIN. COVER (FEET) FOR INDICATED CONSTRUCTION LOADS 18.0-50.0 (KIPS)	50.0-75.0 (KIPS)	75.0-110.0 (KIPS)	110.0-175.0 (KIPS)
18" THRU 36"	2'-0"	2'-6"	3'-0"	3'-0"

②MINIMUM COVER SHALL BE MEASURED FROM TOP OF PIPE TO TOP OF THE MAINTAINED CONSTRUCTION ROADWAY SURFACE. THE SURFACE SHALL BE MAINTAINED.

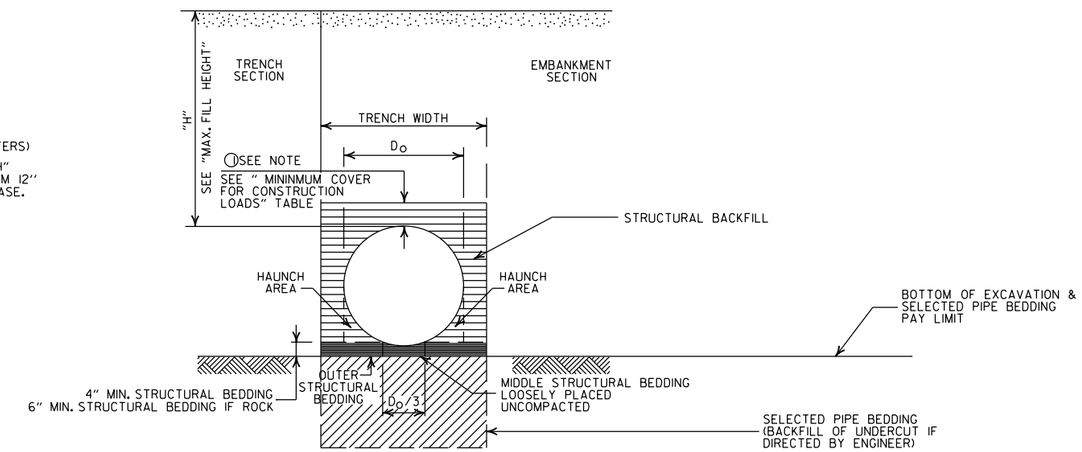

TYPE 2 EMBANKMENT AND TRENCH INSTALLATIONS

1. STRUCTURAL BACKFILL, EMBANKMENT, AND OUTER STRUCTURAL BEDDING MATERIAL SHALL BE COMPACTED TO 95% OF THE MAXIMUM DENSITY ACCORDING TO THE TYPE OR CLASS OF MATERIAL USED.

CONSTRUCTION SEQUENCE

1. PLACE STRUCTURAL BEDDING MATERIAL TO GRADE. DO NOT COMPACT.
2. INSTALL PIPE TO GRADE.
3. COMPACT STRUCTURAL BEDDING OUTSIDE THE MIDDLE THIRD OF THE PIPE.
4. THE STRUCTURAL BACKFILL SHALL BE PLACED AND COMPACTED IN LAYERS NOT EXCEEDING 8". THE LAYERS SHALL BE BROUGHT UP EVENLY AND SIMULTANEOUSLY TO THE ELEVATION OF THE MINIMUM COVER.
5. PIPE INSTALLATION MAY REQUIRE THE USE OF RESTRAINTS, WEIGHTING OR OTHER APPROVED METHODS IN ORDER TO HELP MAINTAIN GRADE AND ALIGNMENT.

GENERAL NOTES

1. PIPE SHALL CONFORM TO ASTM F949, CELL CLASS 12454. INSTALLATION SHALL CONFORM TO JOB SPECIAL PROVISION "PLASTIC PIPE" AND SECTION 606 OF THE STANDARD SPECIFICATIONS FOR HIGHWAY CONSTRUCTION (CURRENT EDITION).
2. PLASTIC PIPE CULVERT DESIGN SHALL CONFORM TO AASHTO LRFD BRIDGE DESIGN SPECIFICATIONS, FIFTH EDITION (2010) WITH 2010 INTERIMS.
3. THE MAXIMUM ALLOWABLE TRENCH WIDTH SHALL BE THE MINIMUM WIDTH PLUS A SUFFICIENT WIDTH TO ENSURE WORKING ROOM TO PROPERLY AND SAFELY PLACE AND COMPACT HAUNCHING AND OTHER BACKFILL MATERIAL.
4. IMPERVIOUS MATERIAL SHOULD BE PLACED AS DIRECTED BY THE ENGINEER AT THE ENDS OF THE CULVERT TO PREVENT LOSS OF STRUCTURAL BEDDING WHEN PERVIOUS MATERIAL IS USED FOR STRUCTURAL BEDDING AND/OR BACKFILL.
5. WHEN DIRECTED BY THE ENGINEER, UNSUITABLE MATERIAL THAT IS ENCOUNTERED AT THE BOTTOM OF THE EXCAVATED TRENCH (BELOW THE AREA IDENTIFIED AS "STRUCTURAL BEDDING" ABOVE) WILL BE EXCAVATED AND REPLACED WITH SELECTED PIPE BEDDING. THE QUANTITY OF MATERIAL REQUIRED TO BACKFILL THE UNDERCUT AREA UP TO THE SELECTED PIPE BEDDING PAY LIMIT DESIGNATED ABOVE WILL BE MEASURED AND PAID FOR AS "SELECTED PIPE BEDDING."
6. WHEN THE EXISTING MATERIAL EXCAVATED FOR THE PIPE TRENCH IS DETERMINED BY THE ENGINEER TO BE UNSUITABLE FOR BACKFILLING THE PIPE (ABOVE THE AREA IDENTIFIED ABOVE AS STRUCTURAL BACKFILL), BORROW MATERIAL OR MATERIAL FROM THE ROADWAY EXCAVATION WILL BE USED TO BACKFILL THE PIPE. IF SUITABLE MATERIAL IS NOT AVAILABLE, THE ENGINEER MAY AUTHORIZE THE USE OF "SELECTED PIPE BACKFILL."
7. FOR PIPE TYPES THAT ARE NOT SMOOTH ON THE OUTSIDE (CORRUGATED OR PROFILE WALLS), BACKFILL GRADATIONS SHOULD BE SELECTED THAT WILL PERMIT THE FILLING OF THE CORRUGATION OR PROFILE VALLEY.
8. PVC PIPES OF DIAMETERS OTHER THAN SHOWN WILL NOT BE ALLOWED.
9. JOINTS FOR PVC PIPE SHALL MEET THE REQUIREMENTS FOR SOIL TIGHTNESS AS SPECIFIED IN AASHTO SECTION 26.4.2.4 AND 30.4.2 "AASHTO LRFD BRIDGE CONSTRUCTION SPECIFICATIONS." JOINTS SHALL BE INSTALLED PER MANUFACTURER'S RECOMMENDATIONS.

- LEGEND -

H = FILL HEIGHT (FT.)
D_O = OUTSIDE DIAMETER OF PIPE
MAX. = MAXIMUM
MIN. = MINIMUM

= STRUCTURAL BACKFILL MATERIAL

= UNDISTURBED SOIL

DATE	REVISION	DATE FILMED
2-27-14	REVISED GENERAL NOTE 1.	
12-15-11	REV GENERAL NOTES & MINIMUM COVER NOTE; DELETED SM3 MATERIAL	
11-17-10	ISSUED	

ARKANSAS STATE HIGHWAY COMMISSION

PLASTIC PIPE CULVERT (PVC F949)

STANDARD DRAWING PCP-2

INSTALLATION TYPE	**MATERIAL REQUIREMENTS FOR STRUCTURAL BACKFILL AND STRUCTURAL BEDDING
TYPE 1	AGGREGATE BASE COURSE (CLASS 4, 5, 6, OR 7)
TYPE 2	*SELECTED MATERIALS (CLASS SM-1, SM-2 OR SM-4) OR TYPE 1 INSTALLATION MATERIAL

*SM3 WILL NOT BE ALLOWED.

** STRUCTURAL BEDDING MATERIAL SHALL HAVE A MAXIMUM PARTICLE SIZE OF 1 INCH. STRUCTURAL BACKFILL MATERIAL SHALL BE FREE OF ORGANIC MATERIAL, STONES LARGER THAN 1.50 INCH IN GREATEST DIMENSION, OR FROZEN LUMPS.

STRUCTURAL BACKFILL AND STRUCTURAL BEDDING MATERIAL WILL NOT BE PAID FOR SEPARATELY, BUT COMPENSATION WILL BE CONSIDERED TO BE INCLUDED IN THE PRICE BID PER LINEAR FOOT OF POLYPROPYLENE PIPE.

MINIMUM TRENCH WIDTH BASED ON FILL HEIGHT "H"

PIPE DIAMETER	TRENCH WIDTH (FEET) "H" < 10'-0"	TRENCH WIDTH (FEET) "H" >OR= 10'-0"
18"	4'-6"	4'-6"
24"	5'-0"	6'-0"
30"	5'-6"	7'-6"
36"	6'-0"	9'-0"
42"	7'-0"	10'-6"
48"	8'-0"	12'-0"
60"	10'-0"	15'-0"

(1) NOTE:
12" MIN. (18" - 42" DIAMETERS)
24" MIN. (60" DIAMETER)

MINIMUM COVER VALUES, "H" SHALL INCLUDE A MINIMUM 12" OF PAVEMENT AND/OR BASE.

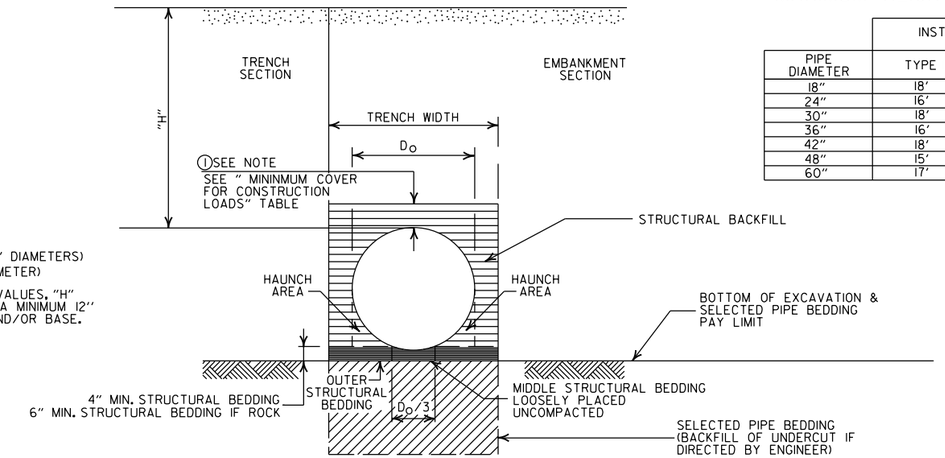

MAXIMUM HEIGHT OF FILL "H"

PIPE DIAMETER	INSTALLATION TYPE TYPE 1	INSTALLATION TYPE TYPE 2
18"	18'	14'
24"	16'	12'
30"	18'	14'
36"	16'	12'
42"	18'	13'
48"	15'	11'
60"	17'	12'

MULTIPLE INSTALLATION OF POLYPROPYLENE PIPES

PIPE DIAMETER	CLEAR DISTANCE BETWEEN PIPES
18"	1'-6"
24"	2'-0"
30"	2'-6"
36"	3'-0"
42"	3'-6"
48"	4'-0"
60"	5'-0"

MINIMUM COVER FOR CONSTRUCTION LOADS

PIPE DIAMETER	(2) MIN. COVER (FEET) FOR INDICATED CONSTRUCTION LOADS 18.0-50.0 (KIPS)	50.0-75.0 (KIPS)	75.0-110.0 (KIPS)	110.0-150.0 (KIPS)
36" OR LESS	2'-0"	2'-6"	3'-0"	3'-0"
42" OR GREATER	3'-0"	3'-0"	3'-6"	4'-0"

(2) MINIMUM COVER SHALL BE MEASURED FROM TOP OF PIPE TO TOP OF THE MAINTAINED CONSTRUCTION ROADWAY SURFACE. THE SURFACE SHALL BE MAINTAINED.

EMBANKMENT AND TRENCH INSTALLATIONS

1. STRUCTURAL BACKFILL, EMBANKMENT, AND OUTER STRUCTURAL BEDDING MATERIAL SHALL BE COMPACTED TO 95% OF THE MAXIMUM DENSITY ACCORDING TO THE TYPE OR CLASS OF MATERIAL USED.

CONSTRUCTION SEQUENCE

1. PLACE STRUCTURAL BEDDING MATERIAL TO GRADE. DO NOT COMPACT.
2. INSTALL PIPE TO GRADE.
3. COMPACT STRUCTURAL BEDDING OUTSIDE THE MIDDLE THIRD OF THE PIPE.
4. THE STRUCTURAL BACKFILL SHALL BE PLACED AND COMPACTED IN LAYERS NOT EXCEEDING 8". THE LAYERS SHALL BE BROUGHT UP EVENLY AND SIMULTANEOUSLY TO THE ELEVATION OF THE MINIMUM COVER.
5. PIPE INSTALLATION MAY REQUIRE THE USE OF RESTRAINTS, WEIGHTING OR OTHER APPROVED METHODS IN ORDER TO HELP MAINTAIN GRADE AND ALIGNMENT.

GENERAL NOTES

1. PIPE SHALL CONFORM TO AASHTO M330, TYPE S. INSTALLATION SHALL CONFORM TO JOB SPECIAL PROVISION "PLASTIC PIPE" AND SECTION 606 OF THE STANDARD SPECIFICIATIONS FOR HIGHWAY CONSTRUCTION (CURRENT EDITION).
2. PLASTIC PIPE CULVERT DESIGN SHALL CONFORM TO AASHTO LRFD BRIDGE DESIGN SPECIFICATIONS, SIXTH EDITION (2012) WITH 2013 INTERIMS.
3. THE MAXIMUM ALLOWABLE TRENCH WIDTH SHALL BE THE MINIMUM WIDTH PLUS A SUFFICIENT WIDTH TO ENSURE WORKING ROOM TO PROPERLY AND SAFELY PLACE AND COMPACT HAUNCHING AND OTHER BACKFILL MATERIAL.
4. IMPERVIOUS MATERIAL SHOULD BE PLACED AS DIRECTED BY THE ENGINEER AT THE ENDS OF THE CULVERT TO PREVENT LOSS OF STRUCTURAL BEDDING WHEN PERVIOUS MATERIAL IS USED FOR STRUCTURAL BEDDING AND/OR BACKFILL.
5. WHEN DIRECTED BY THE ENGINEER, UNSUITABLE MATERIAL THAT IS ENCOUNTERED AT THE BOTTOM OF THE EXCAVATED TRENCH (BELOW THE AREA IDENTIFIED AS "STRUCTURAL BEDDING" ABOVE) WILL BE EXCAVATED AND REPLACED WITH SELECTED PIPE BEDDING. THE QUANTITY OF MATERIAL REQUIRED TO BACKFILL THE UNDERCUT AREA UP TO THE SELECTED PIPE BEDDING PAY LIMIT DESIGNATED ABOVE WILL BE MEASURED AND PAID FOR AS "SELECTED PIPE BEDDING."
6. WHEN THE EXISTING MATERIAL EXCAVATED FOR THE PIPE TRENCH IS DETERMINED BY THE ENGINEER TO BE UNSUITABLE FOR BACKFILLING THE PIPE (ABOVE THE AREA IDENTIFIED ABOVE AS STRUCTURAL BACKFILL), BORROW MATERIAL OR MATERIAL FROM THE ROADWAY EXCAVATION WILL BE USED TO BACKFILL THE PIPE. IF SUITABLE MATERIAL IS NOT AVAILABLE, THE ENGINEER MAY AUTHORIZE THE USE OF "SELECTED PIPE BACKFILL."
7. FOR PIPE TYPES THAT ARE NOT SMOOTH ON THE OUTSIDE (CORRUGATED OR PROFILE WALLS), BACKFILL GRADATIONS SHOULD BE SELECTED THAT WILL PERMIT THE FILLING OF THE CORRUGATION OR PROFILE VALLEY.
8. POLYPROPYLENE PIPES OF DIAMETERS OTHER THAN SHOWN WILL NOT BE ALLOWED.
9. JOINTS FOR POLYPROPYLENE PIPE SHALL MEET THE REQUIREMENTS FOR SOIL TIGHTNESS AS SPECIFIED IN SECTION 26.4.2.4 AND 30.4.2 OF THE AASHTO LRFD BRIDGE CONSTRUCTION SPECIFICATIONS 3RD EDITION (2010) WITH 2012 INTERIMS. JOINTS SHALL BE INSTALLED PER MANUFACTURER'S RECOMMENDATIONS.

- LEGEND -

H = FILL HEIGHT (FT.)
D_O = OUTSIDE DIAMETER OF PIPE
MAX. = MAXIMUM
MIN. = MINIMUM

= STRUCTURAL BACKFILL MATERIAL
= UNDISTURBED SOIL

DATE	REVISION	DATE FILMED
02-27-20	REVISED	
11-07-19	ISSUED	

ARKANSAS STATE HIGHWAY COMMISSION

PLASTIC PIPE CULVERT (POLYPROPYLENE)

STANDARD DRAWING PCP-3

NOTES:

1. REFER TO THE STRIPING DETAILS FOR PAVEMENT MARKING LINE WIDTHS.
2. THIS DRAWING SHALL BE USED IN CONJUNCTION WITH THE LATEST REVISED ADDITION OF THE "MANUAL ON UNIFORM TRAFFIC CONTROL DEVICES."
3. RAISED PAVEMENT MARKERS SHALL BE PLACED ON AN 80 FEET SPACING UNLESS OTHERWISE SHOWN IN THE PLANS.

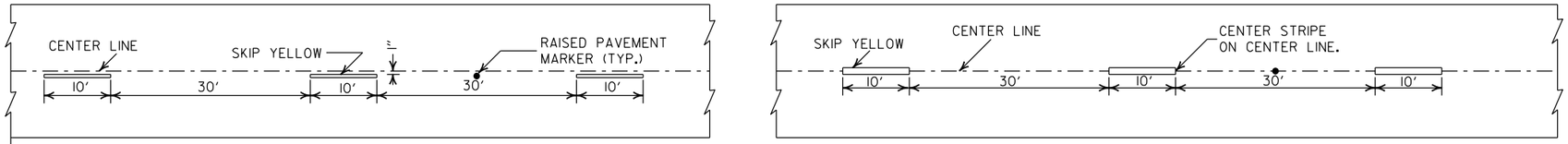

CONCRETE PAVEMENT

ASPHALT PAVEMENT

BROKEN LINE STRIPING

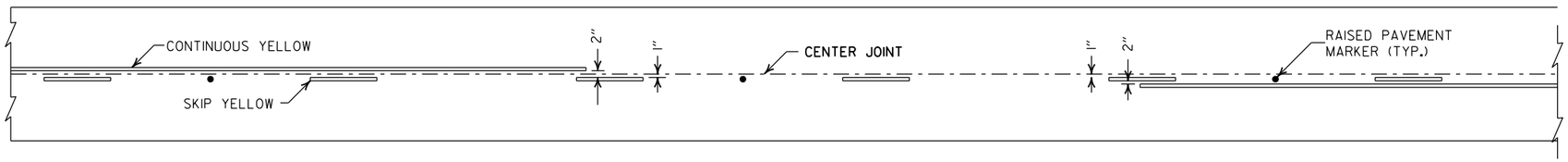

SOLID LINE STRIPING ON CONCRETE PAVEMENT

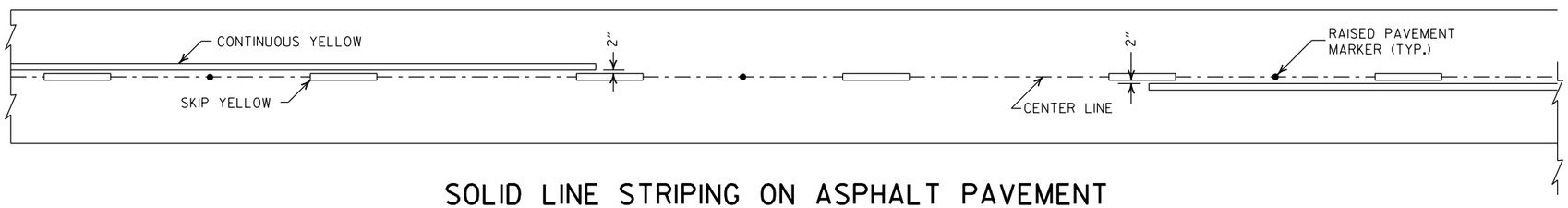

SOLID LINE STRIPING ON ASPHALT PAVEMENT

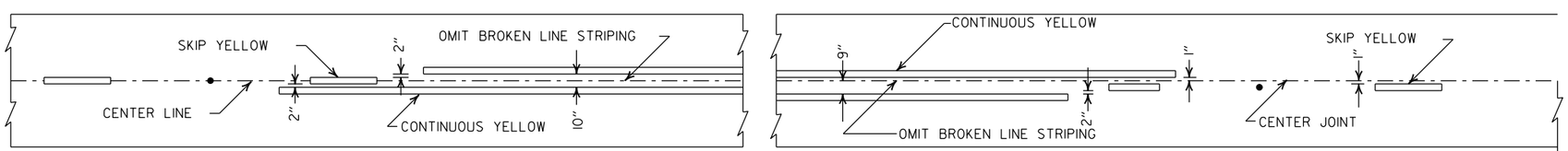

ASPHALT PAVEMENT

CONCRETE PAVEMENT

STRIPING AT ADJACENT NO PASSING LANES

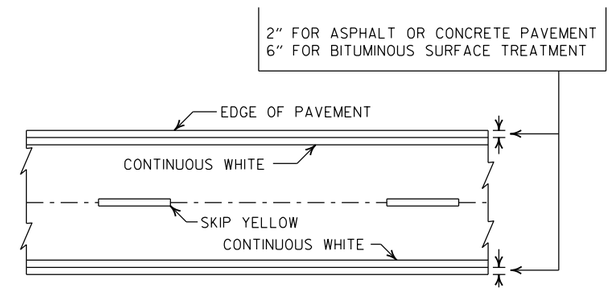

PAVEMENT EDGE LINE MARKING

NOTE:
THE RED LENS OF THE TYPE II R.P.M. SHALL FACE THE INCORRECT TRAFFIC MOVEMENT.

NOTE:
DIMENSIONS SHOWN FOR RAISED PAVEMENT MARKERS ARE TYPICAL. THE CONTRACTOR MAY SUBSTITUTE SIMILAR MARKERS WITH THE APPROVAL OF THE ENGINEER. REQUESTING APPROVAL FOR SIMILAR MARKERS MAY BE MADE BY REFERRING TO THE ARDOT QUALIFIED PRODUCTS LIST.

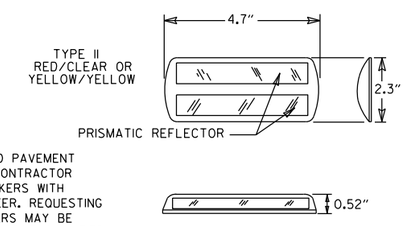

DETAIL OF STANDARD RAISED PAVEMENT MARKERS

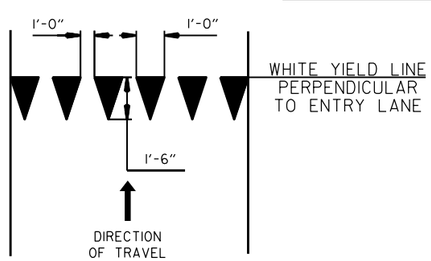

YIELD LINE DETAIL

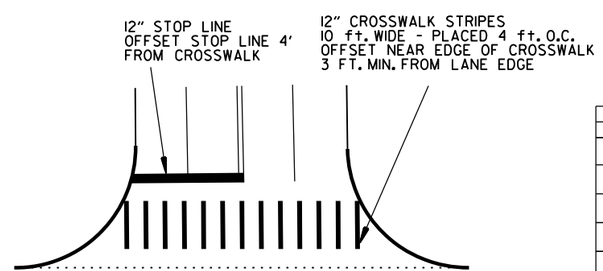

CROSSWALK AND STOP LINE DETAILS

DATE	REVISION	FILMED
2-27-20	REVISED STOP LINE DETAILS	
6-1-17	ADDED YIELD LINE DETAIL	
5-12-16	REVISED LINE WIDTHS, SPACING, & NOTES	
9-12-13	REVISED DETAIL OF STANDARD RAISED PAVEMENT MARKERS	
11-17-10	REVISED GENERAL NOTES & REMOVED PLOWABLE PVMT MRKRS	
11-18-04	REVISED NOTE 2 & GENERAL NOTES	
8-22-02	ADDED CROSSWALK & STOPBAR DTLS.	
7-02-98	ADDED DETAILS OF STD. RAISED PAV'T. MARKERS	
4-26-96	REV. NOTES 3&4; ADDED R.P.M.	
9-30-80	DRAWN	1-9-30-80

ARKANSAS STATE HIGHWAY COMMISSION

PAVEMENT MARKING DETAILS

STANDARD DRAWING PM-1

PAVEMENT MARKING QUANTITIES
(BASED ON 700' ACCEL. LANE + 300' TAPER)

ENTRANCE RAMP

12" WHITE = 370 LIN. FT.
RAISED PAVEMENT MARKERS TYPE II (WHITE/RED) = 38 EACH

EXIT RAMP
6" WHITE = 280 LIN. FT.
12" WHITE = 815 LIN. FT.
RAISED PAVEMENT MARKERS TYPE II (WHITE/RED) = 38 EACH
RAISED PAVEMENT MARKERS TYPE II (WHITE/RED) = 48 EACH

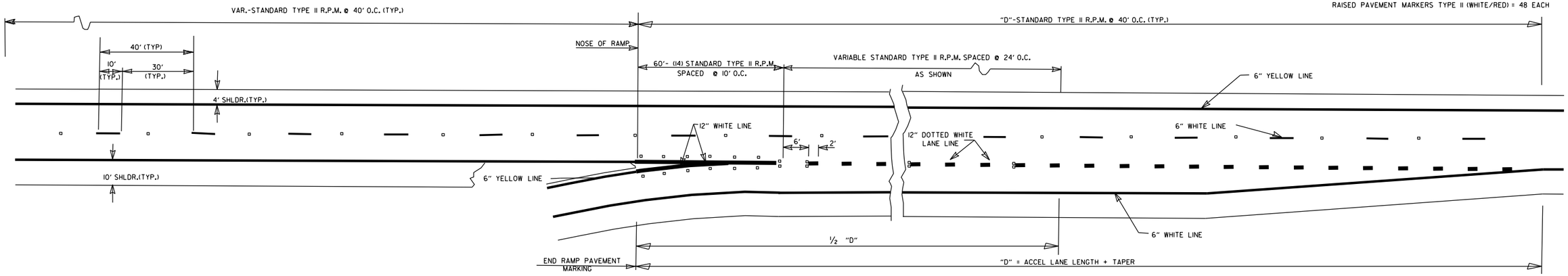

ENTRANCE RAMPS

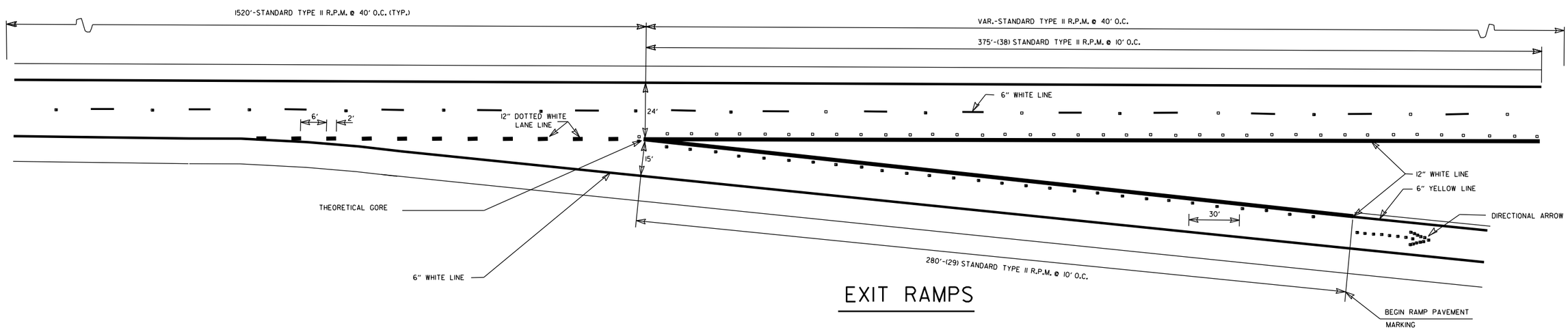

EXIT RAMPS

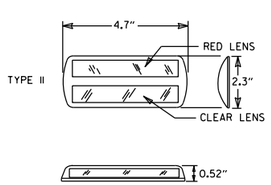

DETAIL OF
STANDARD
RAISED PAVEMENT MARKERS

NOTE:
THE RED LENS OF THE TYPE II R.P.M. SHALL FACE THE INCORRECT TRAFFIC MOVEMENT.

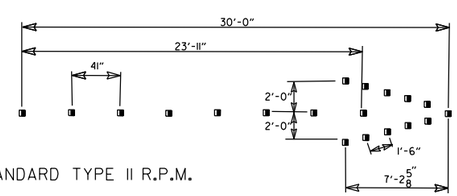

(19) STANDARD TYPE II R.P.M.

DIRECTIONAL ARROWS

GENERAL NOTES:

THIS DRAWING SHOULD BE CONSIDERED AS TYPICAL ONLY AND THE FINAL LOCATION OF THE STRIPING AND PAVEMENT MARKERS SHALL BE DETERMINED BY THE ENGINEER.

THIS DRAWING SHOULD BE USED IN CONJUNCTION WITH THE "MANUAL ON UNIFORM TRAFFIC CONTROL DEVICES", LATEST REVISION.

NOTE:
DIMENSIONS SHOWN FOR RAISED PAVEMENT MARKERS ARE TYPICAL. THE CONTRACTOR MAY SUBSTITUTE SIMILAR MARKERS WITH THE APPROVAL OF THE ENGINEER. REQUESTING APPROVAL FOR SIMILAR MARKERS MAY BE MADE BY REFERRING TO THE ARDOT QUALIFIED PRODUCTS LIST.

DATE	REVISION	FILMED
05-14-20	REMOVED CROSSHATCH MARKINGS ON EXIT RAMPS	
11-07-19	REVISED DOTTED PAV'T MARKINGS; ADDED CROSSHATCH MARKINGS ON EXIT RAMPS	
12-8-16	REVISED RAISED PAV'T MARKERS FOR 80' SPACING; REVISED WIDTH OF STRIPING	
9-12-13	REVISED DETAIL OF STANDARD RAISED PAVEMENT MARKERS	
7-26-12	REVISED RPM NOTATION	
12-15-11	REVISED RPMs ACCORDING TO LATEST POLICY	
11-17-10	REMOVED PLOWABLE PAVEMENT MARKERS	
6-3-10	REVISED PER 2009 MUTCD	
11-18-04	REVISED NOTES	
8-22-02	ADDED & REVISED NOTES; REV. ENTRANCE & EXIT RAMPS	
5-18-00	REMOVED HASHMARKS	
7-02-98	CHANGED TYPES TO ROMAN NUMERALS	
4-26-96	ADDED DIMENSIONS & QUANTITIES; REVISED LANE WIDTH ON EXIT RAMP	
2-2-95	PLACED IN USE	2-2-95

ARKANSAS STATE HIGHWAY COMMISSION

PAVEMENT MARKING DETAILS ON ACCESS CONTROLLED ROADWAYS

STANDARD DRAWING PM-2

NOTE:

1. UNLESS OTHERWISE SPECIFIED ON THE PLANS, THE UNDERDRAIN COVER SHALL BE THOROUGHLY COMPACTED EARTH AND SHALL BE SUBSIDIARY TO PIPE UNDERDRAIN.

2. GRANULAR MATERIAL SHALL BE WRAPPED WITH GEOTEXTILE FABRIC. LAP FABRIC 12" OR THE WIDTH OF THE TRENCH AT THE TOP.

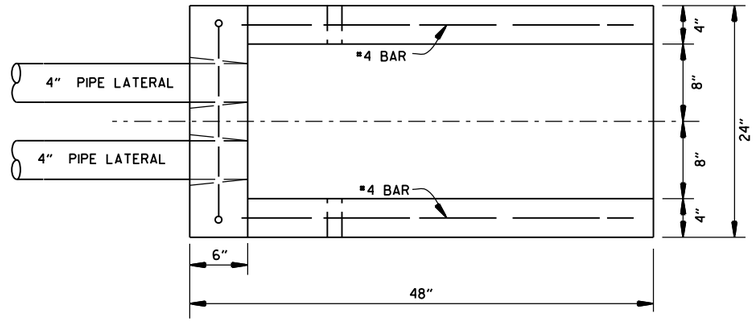

PLAN VIEW

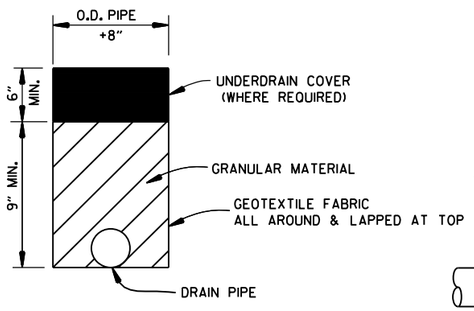

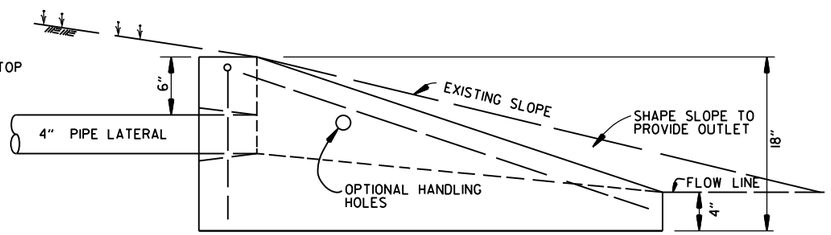

SIDE VIEW

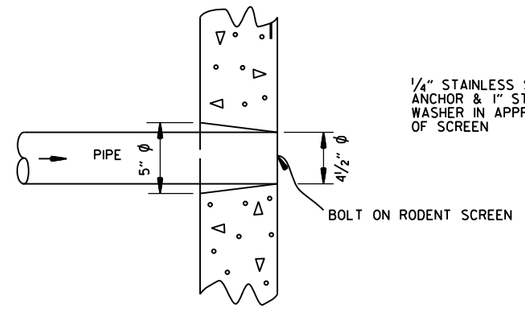

DETAIL OF HOLE
FOR 4" PIPE

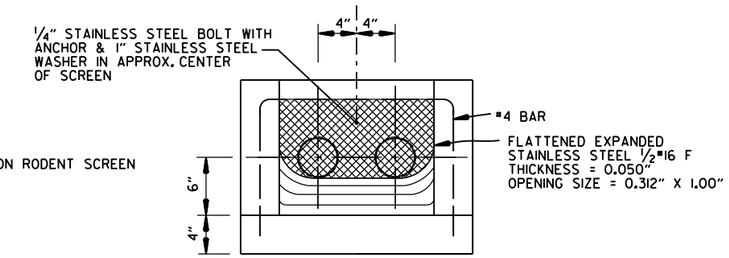

FRONT VIEW
(DETAIL OF RODENT SCREEN)

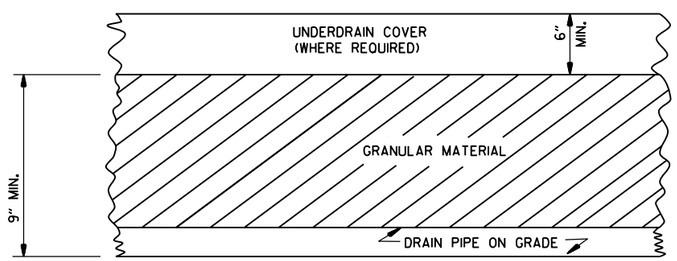

DETAILS OF PIPE UNDERDRAIN

UNDERDRAIN OUTLET PROTECTORS

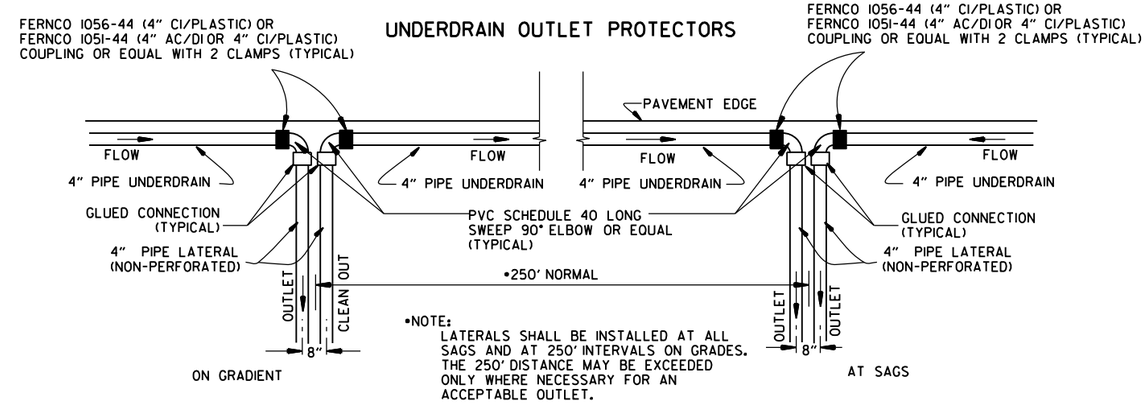

•NOTE:
LATERALS SHALL BE INSTALLED AT ALL SAGS AND AT 250' INTERVALS ON GRADES. THE 250' DISTANCE MAY BE EXCEEDED ONLY WHERE NECESSARY FOR AN ACCEPTABLE OUTLET.

DETAIL OF PIPE UNDERDRAIN LATERALS WHEN PLACED ALONG PAVEMENT EDGE

NOTE: PVC PIPE FOR LATERALS SHALL MEET THE REQUIREMENTS OF ASTM D 1785 (LATEST REVISION) FOR SCHEDULE 40 PIPE.

NOTES FOR PIPE UNDERDRAINS

1. GEOTEXTILE FABRIC SHALL MEET THE REQUIREMENTS OF SECTION 625 FOR TYPE I. PAYMENT FOR GEOTEXTILE FABRIC AND GRANULAR FILTER MATERIAL SHALL BE INCLUDED IN THE PRICE BID PER LIN. FT. FOR "4" PIPE UNDERDRAINS" IN ACCORDANCE WITH SECTION 611 OF THE STANDARD SPECIFICATIONS.

2. 4" NON-PERFORATED SCHEDULE 40 PVC PIPE LATERALS WITH OUTLET PROTECTORS SHALL BE INSTALLED AS SHOWN HEREON. LATERALS WILL BE MEASURED AND PAID FOR AS "4" PIPE UNDERDRAINS." UNDERDRAIN OUTLET PROTECTORS WILL BE MEASURED AND PAID FOR BY THE UNIT IN ACCORDANCE WITH SECTION 611 OF THE STANDARD SPECIFICATIONS.

3. EXISTING 4" PIPE UNDERDRAINS MAY BE CONNECTED TO PROPOSED DROP INLETS OR EXTENDED WHERE DIRECTED BY THE ENGINEER. PAYMENT FOR CONNECTING TO DROP INLETS SHALL BE CONSIDERED INCLUDED IN THE PRICE BID FOR "4" PIPE UNDERDRAINS."

4. THE LOCATION OF ALL LATERALS SHALL BE MARKED WITH 4" X 12" PERMANENT PAVEMENT MARKING TAPE (TYPE III WHITE) AT THE OUTSIDE EDGE OF THE SHOULDER, PLACED TRANSVERSE TO TRAFFIC. PAYMENT FOR THIS WORK SHALL BE INCLUDED IN THE PRICE BID FOR THE VARIOUS CONTRACT ITEMS.

5. PAYMENT FOR THE RODENT SCREEN SHALL BE INCLUDED IN THE PRICE BID PER EACH FOR "UNDERDRAIN OUTLET PROTECTORS."

6. ANY EXISTING UNDERDRAINS THAT INTERFERE WITH INSTALLATION OF THE NEW UNDERDRAIN SYSTEM SHALL BE REMOVED AND DISPOSED OF AS DIRECTED BY THE ENGINEER. PAYMENT WILL BE CONSIDERED INCLUDED IN THE PRICE BID FOR THE VARIOUS CONTRACT ITEMS. EXISTING UNDERDRAIN OUTLET PROTECTORS SHALL BE REMOVED UNDER THE ITEM "REMOVAL AND DISPOSAL OF UNDERDRAIN OUTLET PROTECTORS."

7. AT LOCATIONS WHERE A SINGLE LATERAL IS USED THE CONTRACTOR SHALL HAVE THE FOLLOWING OPTIONS: 1. INSTALL OUTLET PROTECTOR AS SHOWN ON STANDARD DRAWING PU-1 AND GROUT THE UNUSED HOLE OR 2. INSTALL AN OUTLET PROTECTOR WITH A SINGLE HOLE.

DATE	REVISION	DATE FILMED
12-8-16	ADDED NOTES FOR PIPE UNDERDRAINS, REVISED RODENT SCREEN DETAIL AND NOTES, REMOVED NOTE 1 FOR GRANULAR MATERIAL, ADDED NOTE FOR GEOTEXTILE FABRIC	
4-10-03	REVISED NOTE 3	
1-12-00	REVISED DETAIL OF UNDERDRAIN LATERALS	
11-18-98	REVISED NOTE	
10-18-96	REVISED MIN. DEPTH & GEOTEXTILE FABRIC	
4-26-96	ADDED LATERAL NOTE; 5½" TO 5"	
11-22-95	REVISED LATERALS	
7-20-95	REVISED LATERALS & ADDED NOTE	
11- 3-94	REVISED FOR DUAL LATERALS	11- 3-94
10- 1-92	SUBSTITUTED GEOTEXTILE	10- 1-92
8-15-91	ADDED POLYEDTHYLENE PIPE	8-15-91
11- 8-90	DELETED ALTERNATE NOTE	11- 8-90
1-25-90	ADDED 4" SNAP ADAPTER	1-25-90
11-30-89	DEL. (SUBGRADE); ADDED (WHERE REQUIRED)	11-30-89
7-15-88	ISSUED P.L.M.	647-7-15-88

ARKANSAS STATE HIGHWAY COMMISSION

DETAILS OF PIPE UNDERDRAIN

STANDARD DRAWING PU-1

STEEL FABRICATION: REINFORCING STEEL FABRICATION SHALL CONFORM TO THE DIMENSIONS LISTED IN THE TABLE BELOW:

BAR SIZE	PIN DIAMETER	HOOK EXTENSION "K"
3	2¼"	4"
4	3 "	4½"
5	3¾"	5"
6	4½"	6"
7	5¼"	7"
8	6"	8"

IF THE OVERALL HEIGHT OF THE HOOK (SEE DIAGRAM BELOW) FOR A "b", "b1", "b2" or "b3" BENT BAR IS GREATER THAN THE CORRESPONDING TOP OR BOTTOM SLAB THICKNESS, LESS 2¾ INCHES, EACH BENT BAR SHALL BE REPLACED WITH ONE HOOKED BAR AND ONE STRAIGHT BAR, USING LENGTHS AS SHOWN IN THE TABLE BELOW. THE TWO BARS SHALL BE THE SAME DIAMETER AS, AND PLACED AT THE SAME SPACING AS, THE "b", "b1", "b2" OR "b3" BENT BARS THEY REPLACE.

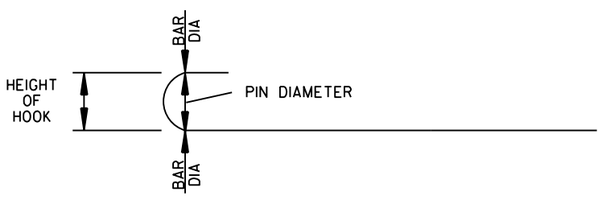

NOTE: DIMENSIONS OF BARS ARE MEASURED OUT TO OUT OF BARS.

OVERALL HEIGHT OF HOOKED BAR DIAGRAM

THE HOOKED BARS SHALL BE PLACED IN THE BOTTOM OF THE TOP SLAB AND THE TOP OF THE BOTTOM SLAB. THE STRAIGHT BARS SHALL BE PLACED IN THE TOP OF THE TOP SLAB AND THE BOTTOM OF THE BOTTOM SLAB. SEE TABLE BELOW FOR LENGTHS OF REPLACEMENT HOOKED AND STRAIGHT BARS.

FOR SKEWED CULVERTS, THE REPLACEMENT STRAIGHT BAR MAY HAVE TO BE CUT IN FIELD TO FIT.

REPLACEMENT BAR LENGTHS TABLE

BAR SIZE: "b", "b1", "b2" OR "b3"	LENGTH OF HOOKED BAR	LENGTH OF STRAIGHT BAR
#4	L + 1' - 0"	SEE "c" BAR LENGTH
#5	L + 1' - 2"	SEE "c" BAR LENGTH
#6	L + 1' - 4"	SEE "c" BAR LENGTH
#7	L + 1' - 8"	SEE "c" BAR LENGTH
#8	L + 1' - 10"	SEE "c" BAR LENGTH
#9	L + 2' - 6"	SEE "c" BAR LENGTH

L = "OW" - 3 INCHES

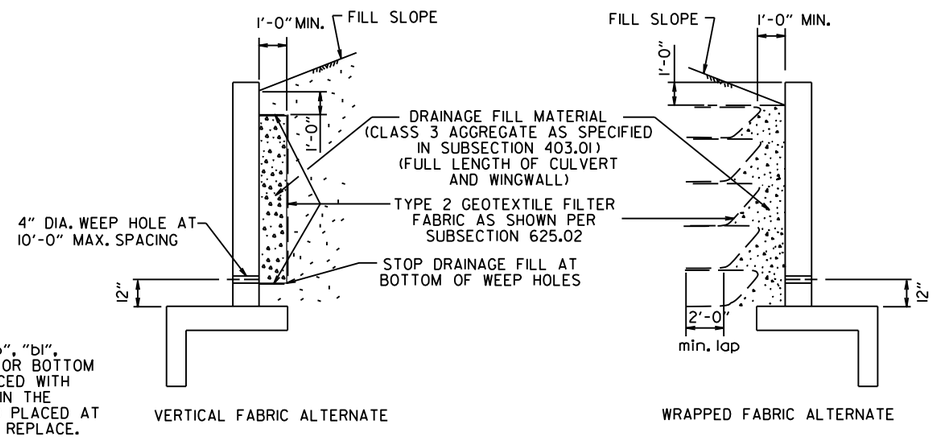

WINGWALL & CULVERT DRAINAGE DETAIL

REINFORCED CONCRETE BOX CULVERT GENERAL NOTES

CONCRETE SHALL BE CLASS S WITH A MINIMUM 28 DAY COMPRESSIVE STRENGTH OF 3500 PSI.

REINFORCING STEEL SHALL BE AASHTO M 31 OR M 53, GRADE 60.

CONSTRUCTION AND MATERIALS FOR WINGWALL & CULVERT DRAINAGE, INCLUDING WEEP HOLES AND GRANULAR MATERIAL, SHALL BE SUBSIDIARY TO THE BID ITEM, "CLASS S CONCRETE".

MEMBRANE WATERPROOFING SHALL CONFORM TO THE REQUIREMENTS OF SECTION 815 OF THE STANDARD SPECIFICATIONS.

MEMBRANE WATERPROOFING SHALL BE APPLIED TO ALL CONSTRUCTION JOINTS IN THE TOP SLAB AND THE SIDEWALLS OF R.C. BOX CULVERTS AS DIRECTED BY THE ENGINEER. NO PAYMENT SHALL BE MADE FOR THIS ITEM, BUT PAYMENT WILL BE CONSIDERED TO BE INCLUDED IN THE VARIOUS ITEMS BID FOR THE R.C. BOX CULVERT.

REINFORCING STEEL TOLERANCES: THE TOLERANCES FOR REINFORCING STEEL SHALL MEET THOSE LISTED IN "MANUAL OF STANDARD PRACTICE" PUBLISHED BY CONCRETE REINFORCING STEEL INSTITUTE (CRSI) EXCEPT THAT THE TOLERANCE FOR TRUSS BARS SUCH AS FIGURE 3 ON PAGE 7-4 OF THE CRSI MANUAL SHALL BE MINUS ZERO TO PLUS ½ INCH.

WEEP HOLES IN BOX CULVERT WALLS SHALL HAVE A MAXIMUM HORIZONTAL SPACING OF 10'-0" AND SHALL BE SPACED TO CLEAR ALL REINFORCING STEEL. THE DRAIN OPENING SHALL BE 4" DIAMETER AND SHALL BE PLACED 12" ABOVE THE TOP OF THE BOTTOM SLAB.

WEEP HOLES IN WINGWALLS SHALL HAVE A MAXIMUM HORIZONTAL SPACING OF 10'-0" AND SHALL BE SPACED TO CLEAR ALL REINFORCING STEEL. THERE SHALL BE A MINIMUM OF TWO (2) WEEP HOLES IN EACH WINGWALL. THE DRAIN OPENING SHALL BE 4" DIAMETER AND SHALL BE PLACED 12" ABOVE THE TOP OF THE WINGWALL FOOTING.

THE REQUIREMENTS SHOWN ON THIS DRAWING SHALL SUPERCEDE THE CORRESPONDING REQUIREMENTS ON ALL REINFORCED CONCRETE BOX CULVERT STANDARD DRAWINGS.

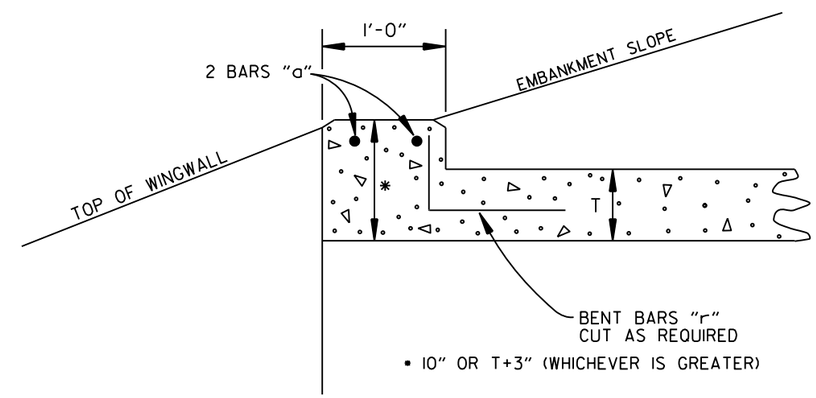

NOTE: FOR ALL SKEWED R.C. BOX CULVERTS THE LENGTH "K" OF THE MODIFIED HEADWALL SHALL BE EQUAL TO THE ROADWAY LENGTH "RL". THE ENDS OF THE HEADWALL SHALL BE CONSTRUCTED PARALLEL TO THE SKEW ANGLE OF THE BOX CULVERT.

R.C. BOX CULVERT HEADWALL MODIFICATIONS

DATE	REVISION	DATE FILMED
7/26/12	REV. DRAINAGE FILL MATERIAL & DETAIL	
12/15/11	REQUIRE WEEP HOLES IN BOX CULVERT WALLS	
5-25-06	REV. GEN. NOTES AND DETAILS FOR WEEP HOLES; BAR DIAGRAM	
11-16-01	ADDED WINGWALL DRAINAGE DETAIL/EDITED GEN. NOTES	
10-18-96	REV. ASTM REF. TO AASHTO & ADDED BAR DIAGRAM	
10-12-95	MOVED SOLID SODDING DETAIL TO RCB-2	
6-2-94	ADDED SOLID SODDING PLAN DETAIL	
8-5-93	REVISED PIN DIAMETER TO SPECS.	
8-15-91	DRAWN AND ISSUED	

ARKANSAS STATE HIGHWAY COMMISSION

REINFORCED CONCRETE BOX CULVERT DETAILS

STANDARD DRAWING RCB-1

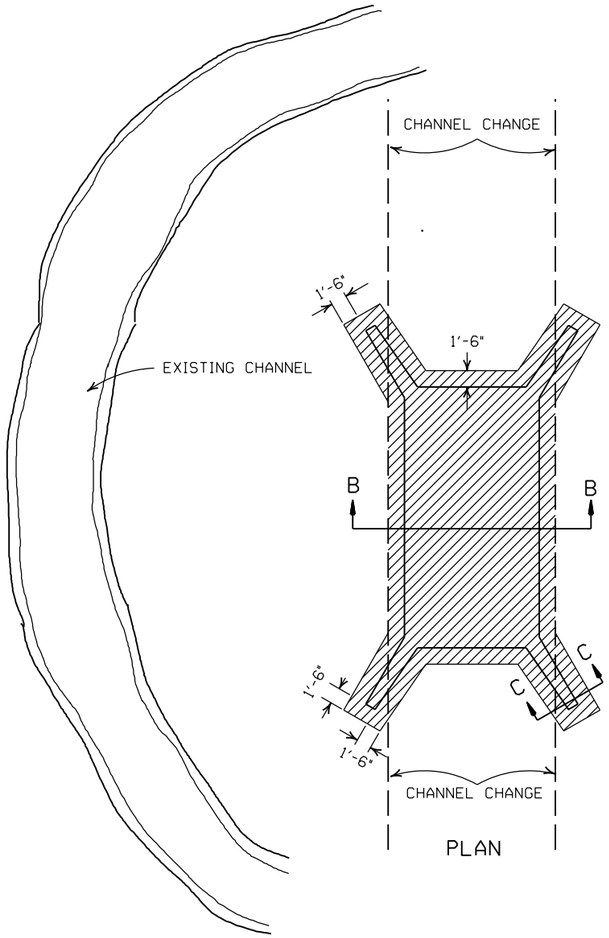

PLAN

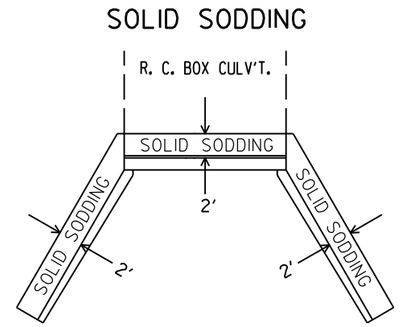

PLAN

PARTIAL SECTION SHOWING SOLID SODDING AT HEADWALLS AND WING WALLS

NOTE: LENGTH MEASURED ALONG THE CENTER OF 2' STRIP OF SOLID SODDING.

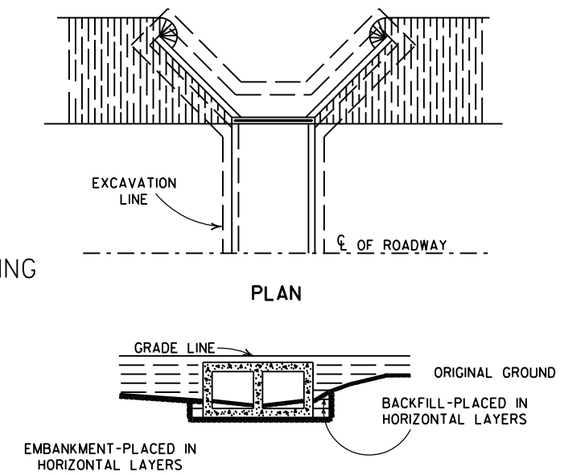

BACKFILL DETAILS FOR BOX CULVERT

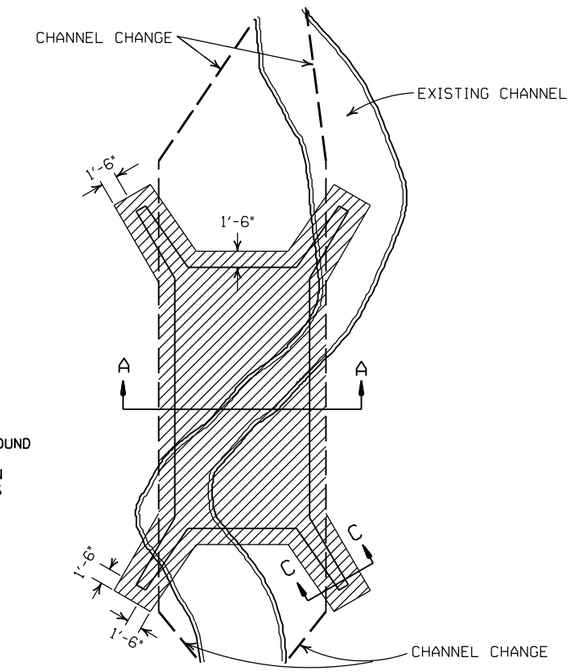

PLAN

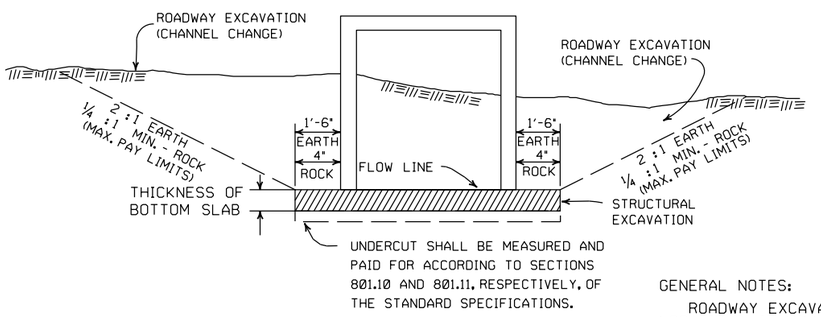

SECTION B-B

DETAILS FOR NEW CHANNELS

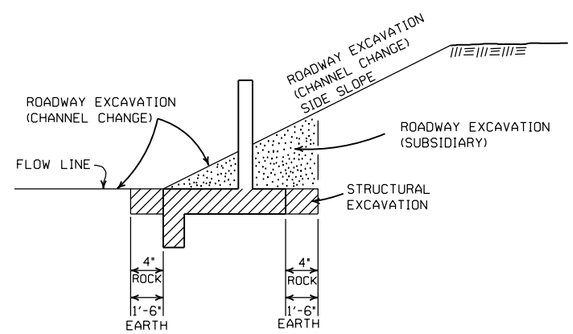

SECTION C-C

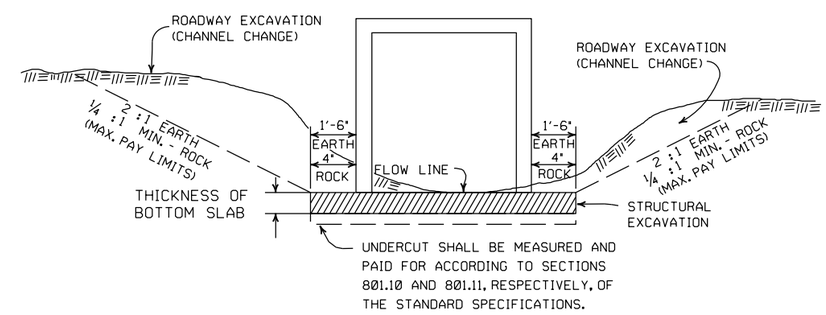

SECTION A-A

DETAILS THROUGH EXISTING CHANNELS

GENERAL NOTES:

ROADWAY EXCAVATION (CHANNEL CHANGE) WILL BE PAID FOR AT R.C. BOX CULVERT LOCATIONS. IT WILL BE PAID TO THE LIMITS ACTUALLY CUT AND WILL BE CONFINED TO THAT PORTION OF THE INDICATED AREA THAT IS ABOVE THE FLOW LINE. ROADWAY EXCAVATION (CHANNEL CHANGE) SHALL BE MEASURED BY CROSS SECTIONS AND VOLUMES COMPUTED BY AVERAGE END AREA METHOD. ALL CHANNEL CHANGES SHALL BE BROUGHT TO GRADE PRIOR TO MAKING ANY EXCAVATION FOR STRUCTURES.

EXCAVATION FOR STRUCTURES WILL BE PAID FOR AT ALL R.C. BOX CULVERT LOCATIONS. IT WILL BE PAID TO THE LIMITS SHOWN AND SHALL BE CONFINED TO THAT PORTION OF THE INDICATED AREA THAT IS BELOW THE CHANNEL FLOW LINE.

ROADWAY EXCAVATION SHOWN IN SECTION C-C ABOVE AS SUBSIDIARY WILL NOT BE MEASURED OR PAID FOR DIRECTLY, BUT PAYMENT WILL BE CONSIDERED TO BE INCLUDED IN THE VARIOUS ITEMS OF EXCAVATION.

DATE	REVISION	FILMED
11-20-03	REVISED SECTION A-A NOTE	
8-22-02	REVISED SECTION B-B NOTE	
10-12-95	COMBINED 1891B AND 1888A	
1-4-83	REVISED GENERAL NOTES	674-1-4-83
	AND ADDED MAXIMUM PAY	
	LIMIT NOTES.	
2-2-76	EXCAV. PAY LIMITS	917-2-2-76
10-2-72	REVISED AND REDRAWN	564-10-16-72

ARKANSAS STATE HIGHWAY COMMISSION

EXCAVATION PAY LIMITS, BACKFILL, & SOLID SODDING FOR BOX CULVERTS

STANDARD DRAWING RCB-2

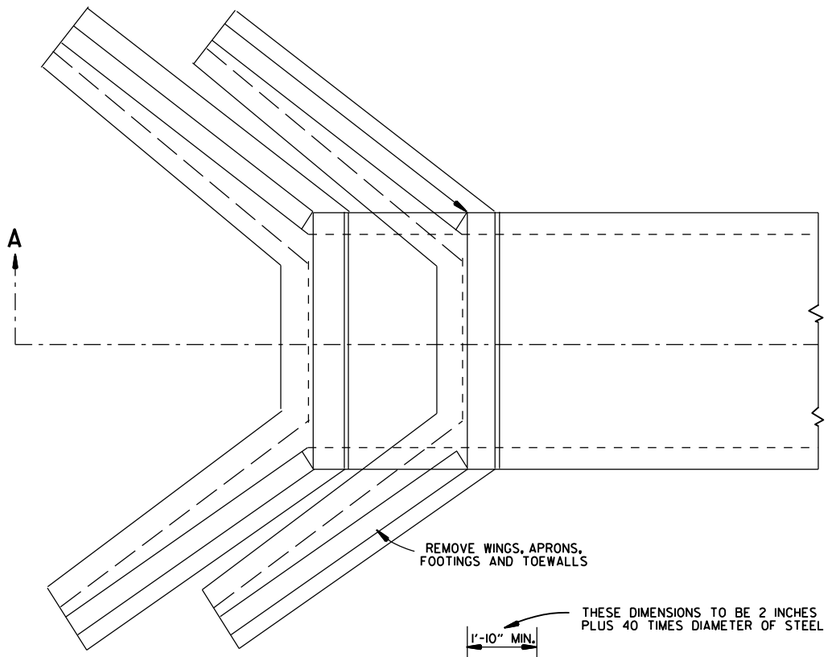

TOP VIEW
R.C. BOX CULVERT

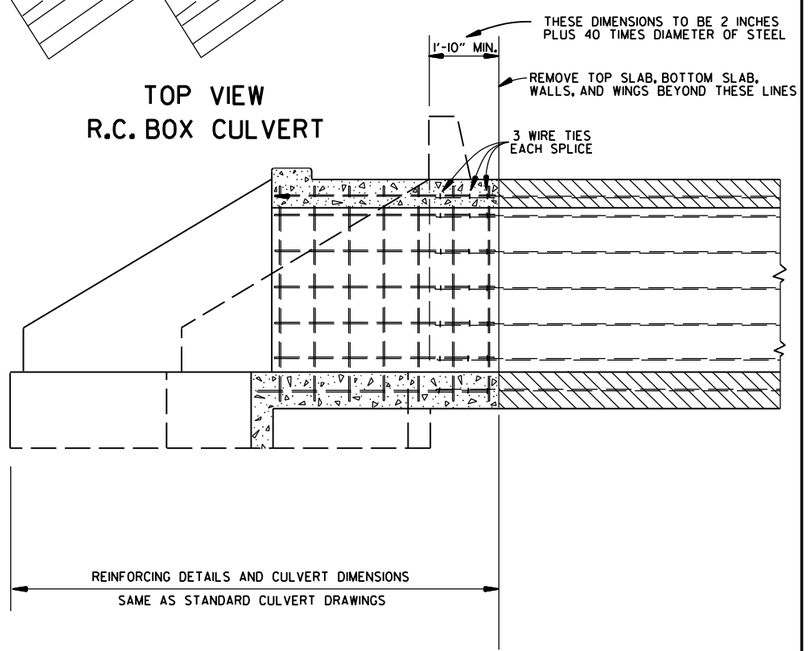

SECTION A-A

METHOD 1

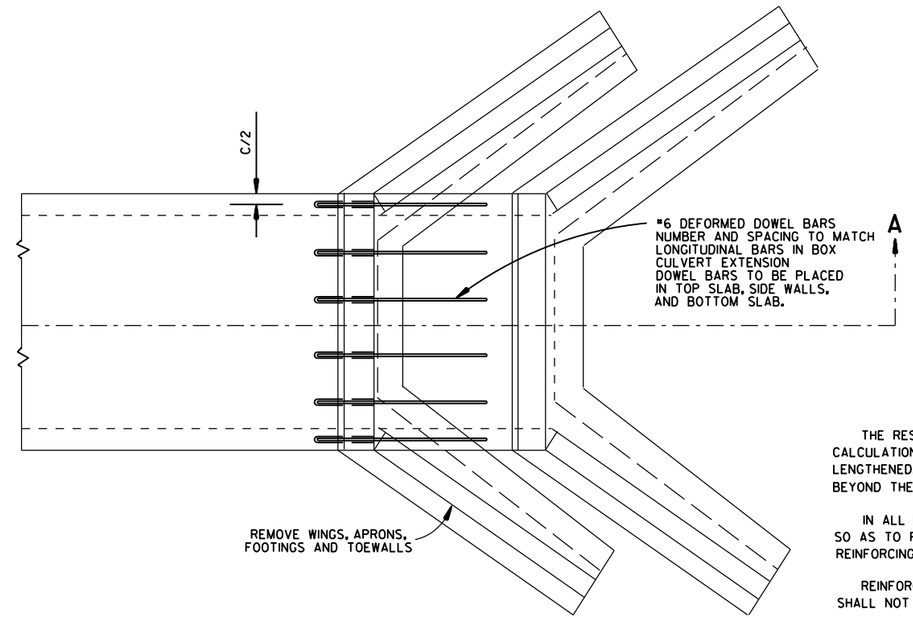

TOP VIEW
R.C. BOX CULVERT

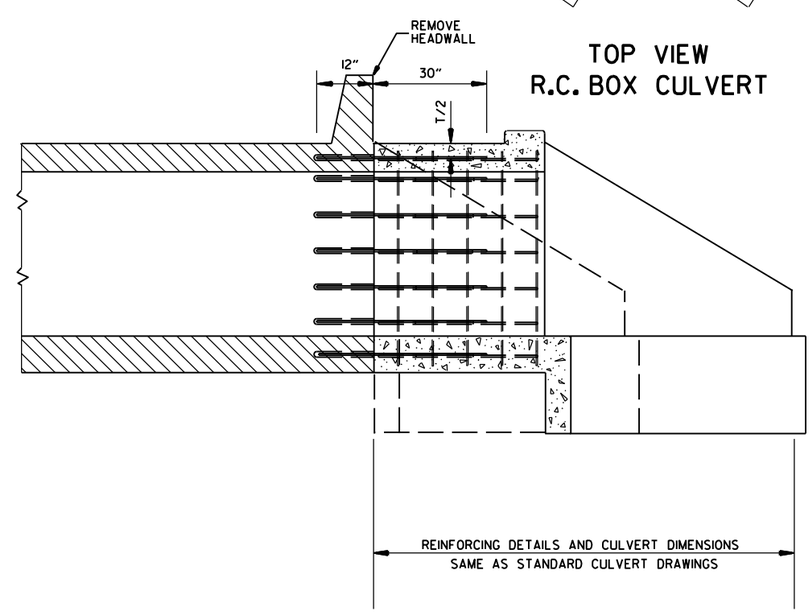

SECTION A-A

METHOD 2

GENERAL NOTES

	USE FOR METHOD
THE RESIDENT ENGINEER WILL MAKE INDIVIDUAL CALCULATIONS OF QUANTITIES FOR EACH STRUCTURE LENGTHENED, MAKING NO ALLOWANCE FOR OVERBREAKAGE BEYOND THE LINES INDICATED.	1
IN ALL INSTANCES CONCRETE SHALL BE REMOVED SO AS TO PERMIT FULL 40 DIAMETER SPLICE OF REINFORCING STEEL.	1
REINFORCING STEEL REMOVED FROM EXISTING STRUCTURE SHALL NOT BE REUSED IN CONSTRUCTING EXTENSION.	1&2
ON R.C. BOX CULVERTS THAT HAVE AN EXISTING CONCRETE APRON; THE CONCRETE APRON SHALL BE REMOVED WITH THE WINGS. THE COST OF REMOVING ALL OLD CONCRETE WILL BE INCLUDED IN THE PRICE BID PER CUBIC YARD FOR NEW CONCRETE OF THE CLASS SPECIFIED AND NO ADDITIONAL COMPENSATION WILL BE ALLOWED.	1&2
MATERIALS FOR SECURING DOWEL BARS SHALL MEET THE REQUIREMENTS OF SECTION 507.02 OF THE STANDARD SPECIFICATIONS.	2
DOWEL BARS SHALL BE INSTALLED AS FOLLOWS: THE DRILLING PROCEDURE SHALL BE APPROVED BY THE ENGINEER. THE FILLING SYSTEM SHALL BE APPROVED BY THE ENGINEER, AND SHALL BE AN INJECTION-TYPE SYSTEM WHICH WILL INSURE THAT SUFFICIENT MATERIAL IS INJECTED SO IT COMPLETELY SURROUNDS THE BARS AND FILLS THE HOLES.	2
THE CONTRACTOR SHALL HAVE THE OPTION OF USING EITHER METHOD 1 OR METHOD 2. REGARDLESS OF WHICH METHOD IS USED, PAY QUANTITIES WILL BE CALCULATED BASED ON METHOD 1.	1&2

NOTE:
NO PART OF THIS STANDARD IS TO BE USED FOR ANY DETAILS RELATIVE TO NEW CONSTRUCTION.

SEE STANDARD DRAWING LISTED IN TABULATION OF STRUCTURES FOR ALL NEW CONSTRUCTION DETAILS.

DATE	REVISION	DATE FILM
10-12-95	CHANGED DRAWING # FROM 144-A	
4-1-93	ADDED GENERAL NOTE	
10-1-92	ADDED ALT. METHOD OF EXTENSION	
11-30-89	REDRAWN	
1-4-83	ELIMINATED CONCRETE CLASS	
12-20-56	RETRACED	

ARKANSAS STATE HIGHWAY COMMISSION

METHOD OF EXTENDING EXISTING R.C. BOX CULVERTS

STANDARD DRAWING RCB-3

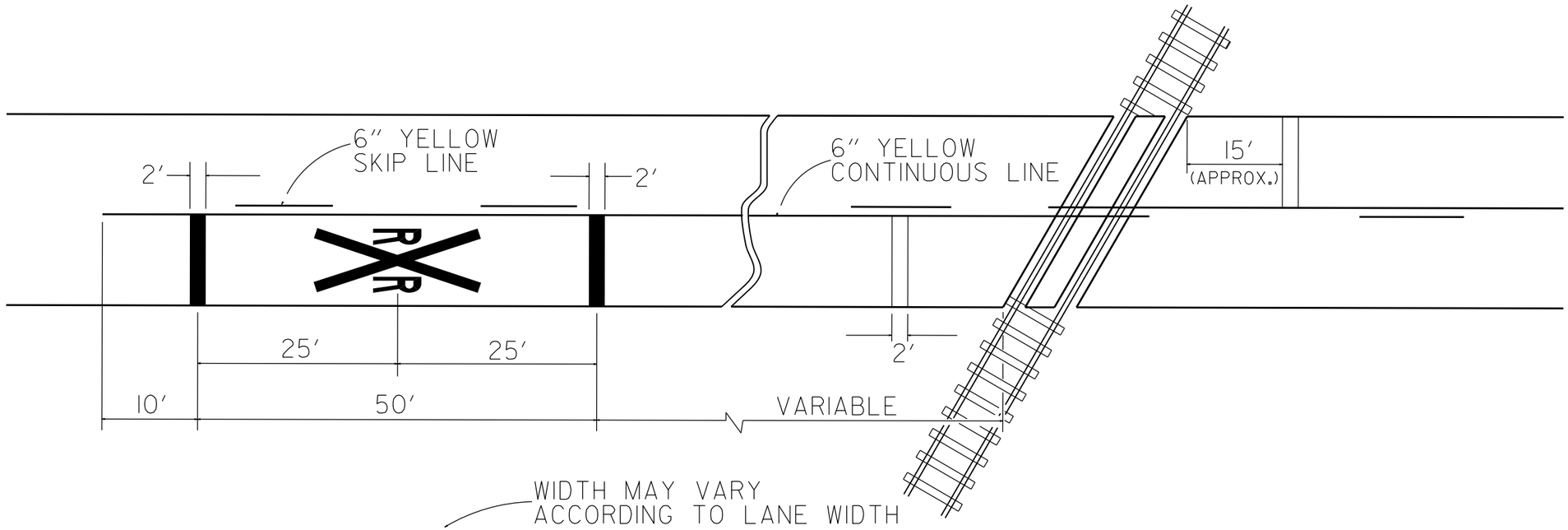

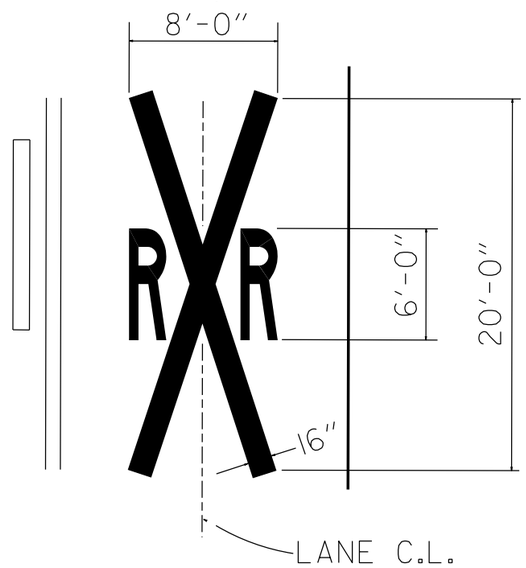

DETAIL OF PAVEMENT MARKINGS FOR RAILROAD CROSSING

PAVEMENT MARKING TO BE SYMMETRICAL ABOUT RAILROAD

NOTES:
THE DISTANCE FROM THE RAILROAD CROSSING MARKING TO THE NEAREST TRACK WILL VARY ACCORDING TO THE APPROACH SPEED AND THE SIGHT DISTANCE OF THE VEHICULAR TRAFFIC APPROACHING, BUT PROBABLY SHOULD BE NOT LESS THAN 50 FEET.

A THREE LANE ROADWAY SHOULD BE MARKED WITH A CENTERLANE FOR TWO-LANE APPROACH OPERATION ON THE APPROACH TO A CROSSING.

ON MULTI-LANE ROADS THE TRANSVERSE BANDS SHOULD EXTEND ACROSS ALL APPROACH LANES, AND INDIVIDUAL RXR SYMBOLS SHOULD BE USED IN EACH APPROACH LANE.

REFER TO STANDARD ALPHABET FOR HIGHWAY SIGNS AND MARKINGS FOR RXR SYMBOLS DETAILS.

DATE	REVISION	DATE FILMED
12-8-16	REVISED CENTERLINE LABELS	
11-20-08	CORRECTED SPELLING	
4-10-03	REVISED NOTES	
3-2-81	DELETED LETTER & ADDED NOTE	684-3-2-81
7-20-79	STOP LINE CHGD. TO PERP.	636-8-30-79
4-23-75	SHEET RENUMBER	697-4-20-79
4-23-75	REDRAWN	860-4-23-75

ARKANSAS STATE HIGHWAY COMMISSION

PAVEMENT MARKING
FOR RAILROAD CROSSING

STANDARD DRAWING RRS-1

GOVERNING SPECIFICATIONS
ARKANSAS STATE HIGHWAY COMMISSION STANDARD SPECIFICATIONS FOR HIGHWAY CONSTRUCTION, LATEST EDITION AND THE FOLLOWING:

THIS FACILITY SHALL COMPLY WITH APPLICABLE FEDERAL, STATE, AND LOCAL LAWS, REGULATIONS, CODES, AND STANDARDS AND SHOULD, AS A MINIMUM, MEET THE SPECIFICATIONS AND DESIGN STANDARDS OF THE AMERICAN RAILWAY ENGINEERING ASSOCIATION AND THE ASSOCIATION OF AMERICAN RAILROADS.

A.A.R. Dwg #1642-1
RAILROAD CROSSING SIGN

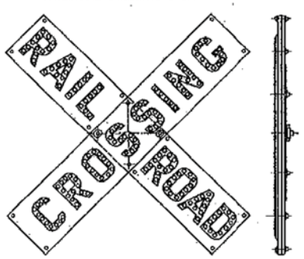

ALTERNATE TYPE
90° CROSSING SIGN
REFLECTOR TYPE

For Details See
A.A.R. Signal Section Specifications
No. 1642-B

(To Be Used When Specified on Plans)

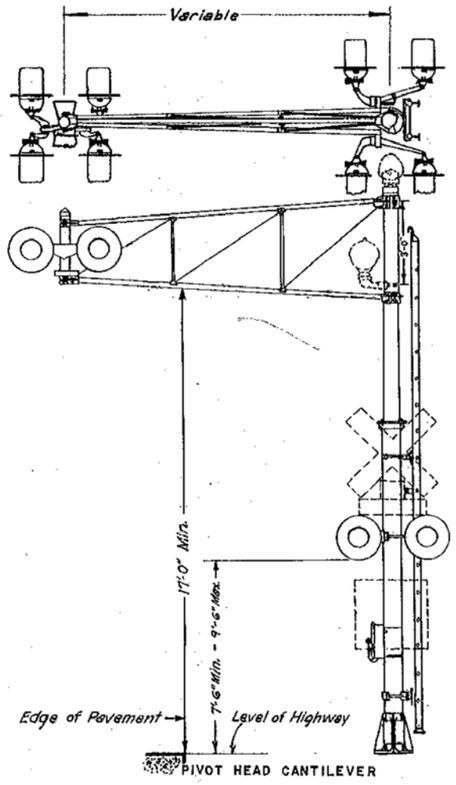

PIVOT HEAD CANTILEVER

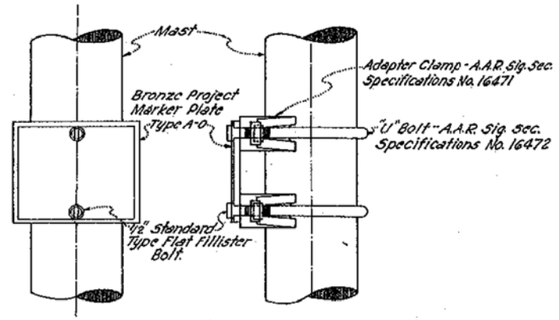

METHOD OF FASTENING BRONZE PROJECT MARKER PLATE TO MAST

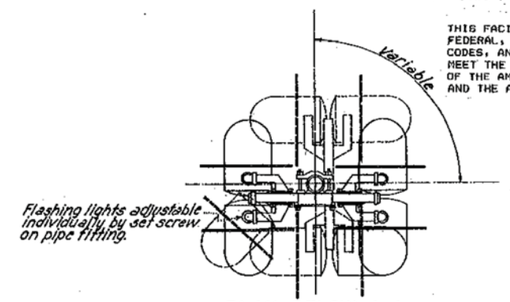

PLAN BELOW A-A
WHEN TWO SIGNAL UNITS ARE USED

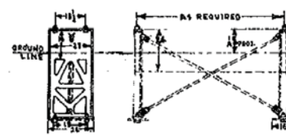

CAST IRON FOUNDATION

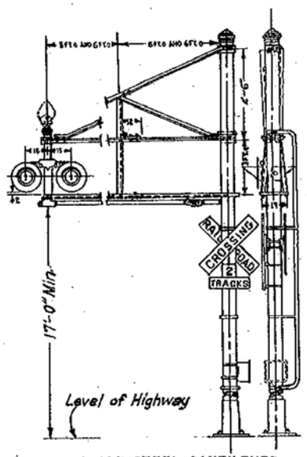

10 to 12ft. STEEL CANTILEVER

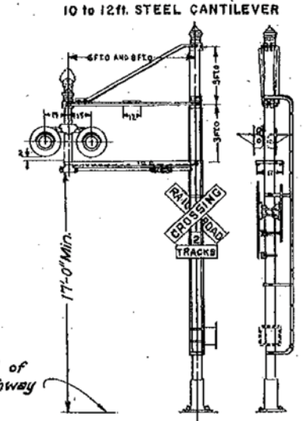

6 to 8ft. STEEL CANTILEVER

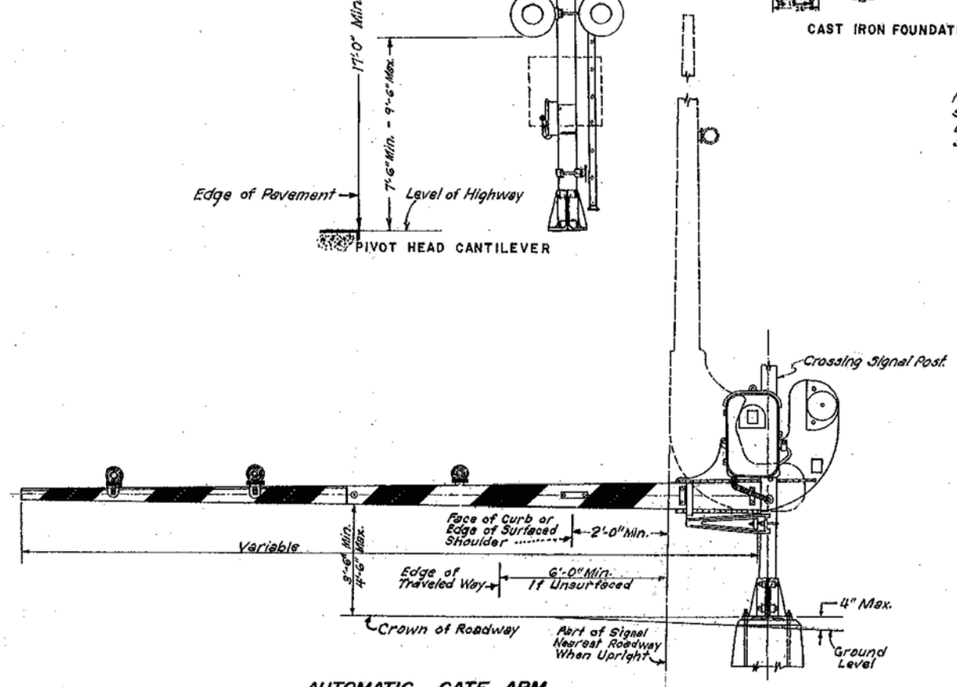

AUTOMATIC GATE ARM

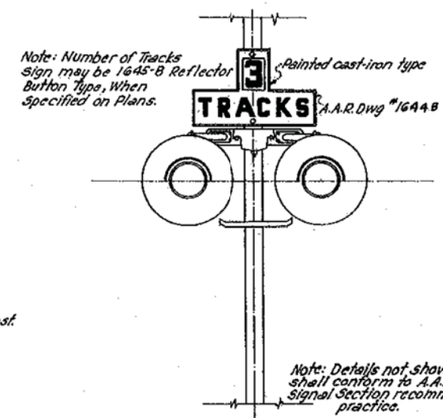

ALTERNATE SIGN TYPES

90° CROSSING SIGN
CAST IRON TYPE

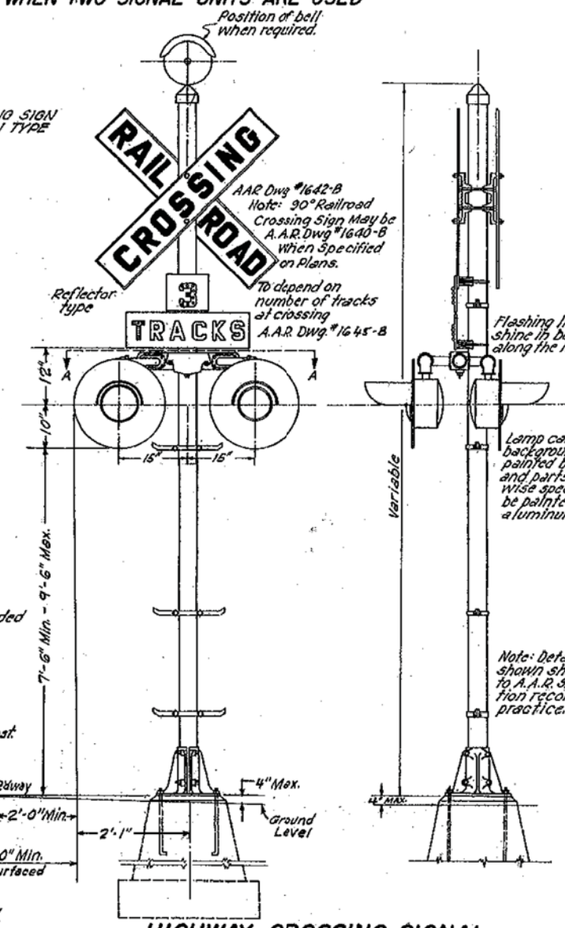

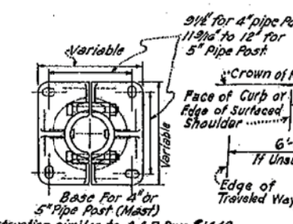

Construction similar to A.A.R. Dwg. #1449

HIGHWAY CROSSING SIGNAL
FLASHING LIGHT TYPE

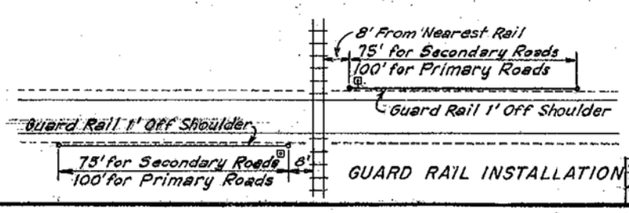

GUARD RAIL INSTALLATION

NOTE:
GUARD RAIL TO BE INSTALLED BY STATE FORCES OR OTHERS WHEN DESIGN SPEED IS 50 MPH OR GREATER AND THE ADT IS 750 OR GREATER, OR AS DIRECTED BY THE ENGINEER.

Date	Revision	Date Filmed
4-10-03	Changed To Current Specs	
7-15-88	Changed From '78 To '88 Specs	1648-7-15-88

DATE	REVISION	DATE FILMED
7-14-78	GR Installation & Note Added	754-7-14-78
10-1-75	Governing Specifications Revised	801-10-1-75
6-10-75	Governing Specifications Added	905-6-10-75
10-25-74	Clearance Distance Revised	743-10-25-74
1-12-73	Min Changed on Cantilever	638-2-13-73
6-3-70	Added Guard Fence Note	692-6-15-70
12-5-69	Added Guard Fence Installation	783-12-5-69
9-10-69	Redrawn	

ARKANSAS STATE HIGHWAY COMMISSION
RAILROAD-HIGHWAY GRADE CROSSING SIGNALS (FLASHING LIGHT TYPE)
DRWG. NO. RRX-3

MINIMUM STRUCTURAL REQUIREMENTS:

DESIGN SPECIFICATIONS: AASHTO STANDARD SPECIFICATIONS FOR STRUCTURAL SUPPORTS FOR HIGHWAY SIGNS, LUMINAIRES AND TRAFFIC SIGNALS, 4TH EDITION (2001) WITH 2003 AND 2006 INTERIMS.

USE FATIGUE CATEGORY II.

CONSTRUCTION SPECIFICATIONS: STANDARD SPECIFICATIONS FOR HIGHWAY CONSTRUCTION (CURRENT EDITION) WITH APPLICABLE SUPPLEMENTAL SPECIFICATIONS AND SPECIAL PROVISIONS.

BASE WIND SPEED: 90 MPH

STEEL MEMBERS CONSIDERED MAIN LOAD CARRYING MEMBERS WITH A THICKNESS GREATER THAN ½" SHALL MEET THE LONGITUDINAL CHARPY V-NOTCH TEST SPECIFIED IN SUBSECTION 807.05 OF THE STANDARD SPECIFICATIONS.

THE GROUND ROD SHALL BE FUSION WELDED TO A 1C/#8 A.W.G. SOLID COPPER GROUND WIRE. ATTACHMENT TO THE PRIMARY GROUND MAY BE BY AN APPROVED CLAMP. THE ROD IS TO BE LOCATED IN THE CONCRETE PULL BOX PAID FOR SEPARATELY AS SHOWN ON THE PLANS.

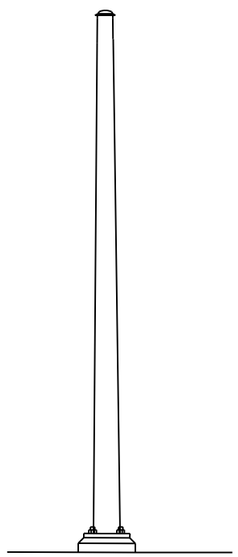

ANTENNA POLE

NOTE:

COMMUNICATION CABLE SHIELD SHALL BE TIED TO THE GROUND AT ONE ONE POINT (MASTER CABINET). THE SHIELD SHALL BE MAINTAINED CONTINUOUS (THROUGH ALL SPLICES). PLEASE REFER TO TESTING PROCEDURES IN SPECIAL PROVISIONS.

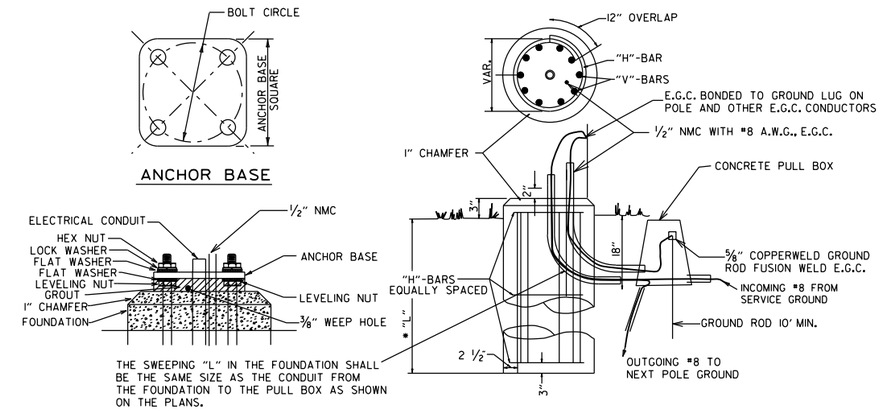

TYPICAL FOUNDATION DETAILS

POLE FOUNDATION MINIMUM DIMENSIONS AND STEEL REINFORCING.

POLE HEIGHT	FOUNDATION DIAMETER	DEPTH "L"	VERTICAL	HORIZONTAL	TIE SPACING
20.0'	30"	5'-6"	12-#7	#4	5 SP @ 12"
25.0'	30"	6'-0"	12-#7	#4	6 SP @ 11"
30.0'	30"	6'-6"	12-#7	#4	6 SP @ 12"
35.0'	30"	7'-0"	12-#7	#4	7 SP @ 11"
40.0'	30"	7'-6"	12-#7	#4	7 SP @ 12"
45.0'	36"	8'-6"	13-#8	#4	8 SP @ 12"
50.0'	36"	9'-6"	13-#8	#4	9 SP @ 12"
55.0'	36"	10'-0"	13-#8	#4	10 SP @ 11"
60.0'	36"	10'-6"	13-#8	#4	10 SP @ 12"
65.0'	36"	11'-0"	13-#8	#4	12 SP @ 10 ½"
70.0'	36"	11'-6"	13-#8	#4	11 SP @ 12"
75.0'	42"	13'-0"	18-#8	#4	14 SP @ 10 ½"
80.0'	42"	13'-6"	18-#8	#4	13 SP @ 12"
85.0'	42"	14'-6"	18-#8	#4	14 SP @ 12"
90.0'	42"	15'-0"	18-#8	#4	18 SP @ 9 ½"

ALL CONCRETE SHALL BE CLASS "S" WITH A MINIMUM 28 DAY COMPRESSIVE STRENGTH F'C=3500 PSI. CONCRETE SHALL BE POURED IN THE DRY AND ALL EXPOSED CORNERS CHAMFERED ¾" UNLESS NOTED OTHERWISE.

ALL REINFORCING STEEL SHALL CONFORM TO AASHTO M31 OR M53, GRADE 40 (YIELD STRENGTH=40,000 PSI).

PROVIDE 3" CLEAR TIES. DETAIL 3" TO FIRST TIE AT TOP OF SHAFT.

DATE	REVISION	FILMED
11-16-17	REVISED NOTES	
02-27-14	REVISED NOTES.	
09-12-13	ISSUED AS STANDARD DRAWING	
05-21-09	REVISED GROUNDING	
07-31-08	REVISED GROUNDING	
04-18-08	REVISED AASHTO NOTES	
04-17-08	REVISED TO 2001 AASHTO STANDARDS	
09-06-00	ISSUED	

ARKANSAS STATE HIGHWAY COMMISSION

ANTENNA POLE

STANDARD DRAWING SD-1

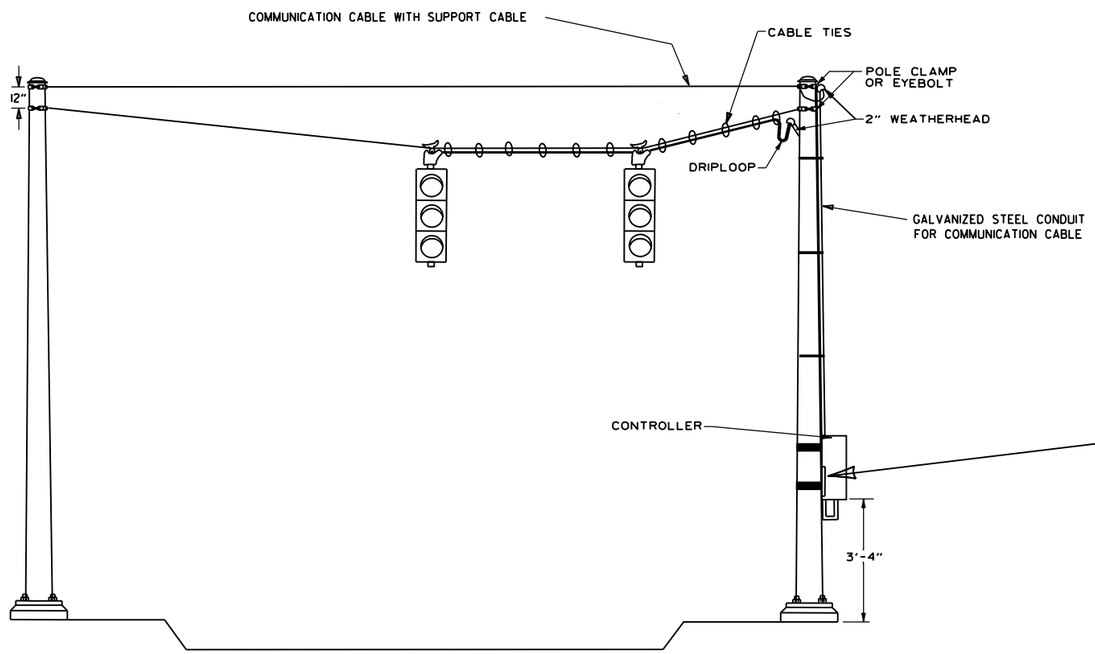

NOT TO SCALE

COMMUNICATION CABLE CROSSING BETWEEN SPAN WIRE POLES

NOTE: COMMUNICATION CABLE SHIELD SHALL BE TIED TO GROUND AT ONLY ONE POINT (MASTER CABINET). THE SHIELD SHALL BE MAINTAINED CONTINUOUS (THROUGH ALL SPLICES). PLEASE REFER TO TESTING PROCEDURES IN SPECIAL PROVISIONS.

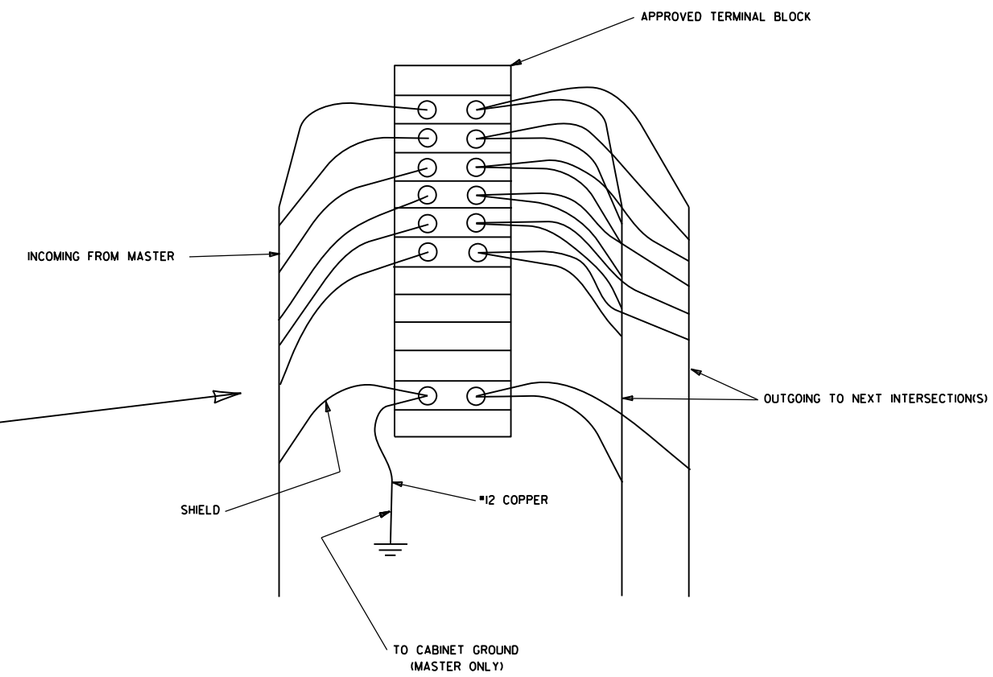

TYPICAL WIRING DIAGRAM FOR COMMUNICATION CABLE

DATE	REVISION	DATE FILM
9-12-13	ISSUED AS STANDARD DRAWING	
12-27-99	REVISED NOTES	
11-18-98	REVISED NOTES	
3-21-92	ISSUED	

ARKANSAS STATE HIGHWAY COMMISSION

SPAN WIRE INSTALLATION WITH COMMUNICATION CABLE CROSSING

STANDARD DRAWING SD-2

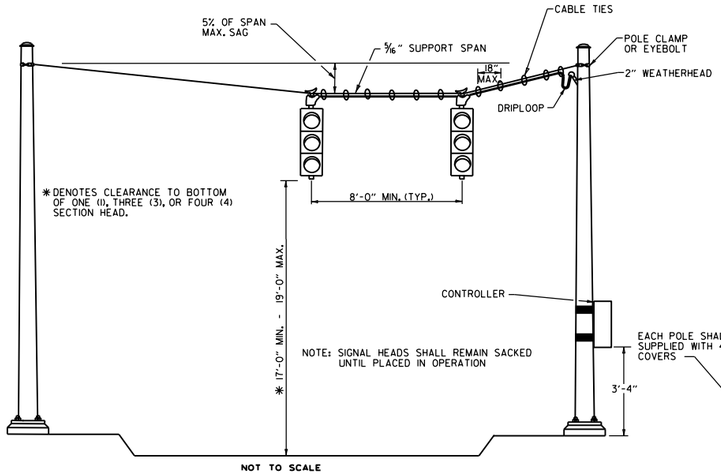

TYPICAL SPAN WIRE ASSEMBLY

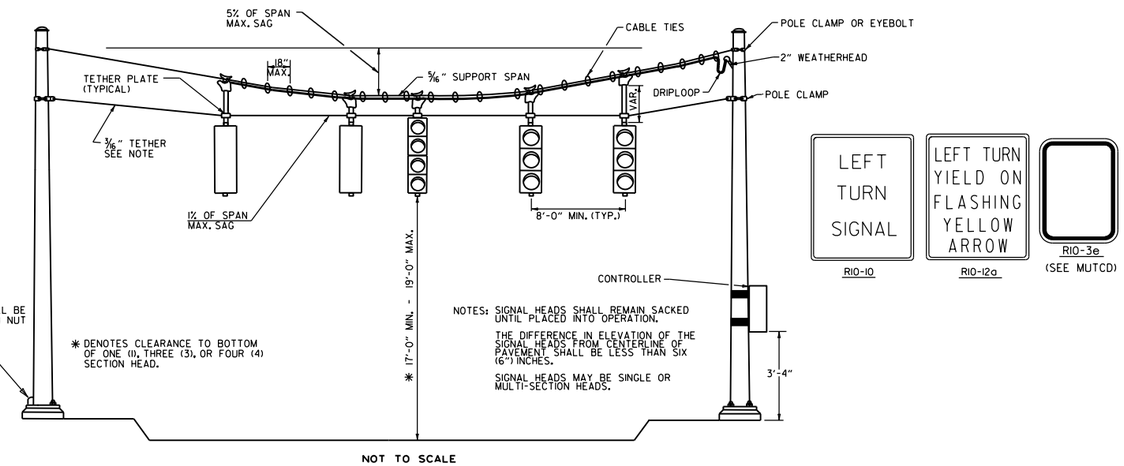

TYPICAL SPAN WIRE ASSEMBLY WITH TETHER

NOTES: SPAN WIRE POLES SHALL BE MOUNTED A MINIMUM OF FOUR (4') FEET BEHIND CURB OR SHOULDER.

OCTAGONAL POLES AND ARMS MEETING THE REQUIREMENTS OF THE PLANS AND SPECIFICATIONS CAN BE IN STALLED IN LIEU OF ROUND POLES AND ARMS. ALL POLES AND ARMS IN A JOB MUST BE OF THE SAME SHAPE.

SPAN WIRE ASSEMBLIES WILL REQUIRE TETHER UNLESS OTHERWISE NOTED ON PLAN SHEETS.

CABLE TIES SHALL BE SUITABLE FOR OUTSIDE USE (BLACK).

THE ANCHOR BOLTS AND SWEEPING "L" CONDUIT SHALL BE PLACED IN THE FOUNDATION IN ACCORDANCE WITH THE MANUFACTURER'S SPECIFICATIONS. THE GROUND ROD SHALL EXTEND A MINIMUM OF 10' BELOW CABINET FOUNDATION.

THE CONTROLLER POWER SUPPLY GROUND BUSS SHALL BE BONDED TO THE FOUNDATION GROUND ROD WITH A #8 A.W.G. SOLID COPPER WIRE. ON EXISTING FOUNDATIONS WITH NO GROUND ROD, CONTRACTOR SHALL INSTALL A 10' X 5/8" COPPERWELD GROUND ROD.

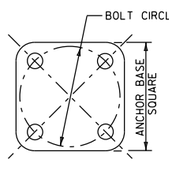

ANCHOR BASE

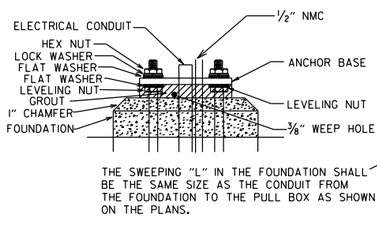

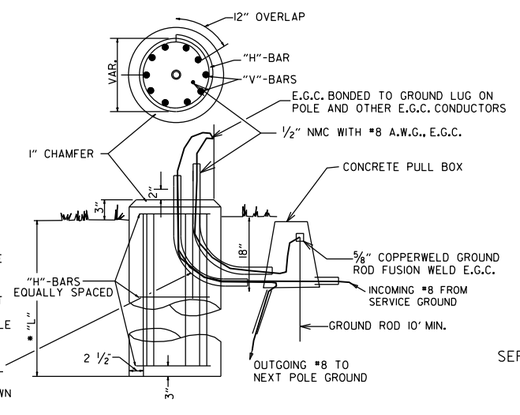

TYPICAL FOUNDATION DETAILS

GROUND ROD - A 10' X 5/8" GROUND ROD SHALL BE INSTALLED IN THE CONCRETE PULL BOX FOR EACH POLE AND THE CONTROLLER. PAYMENT FOR THE GROUND ROD AND 1/2" NMC SHALL BE INCLUDED IN ITEM 713 FOR SIGNAL POLES AND ITEM 701 FOR THE CONTROLLER. THE CONCRETE PULL BOX AND E.G.C. CONDUCTOR SHALL BE PAID FOR SEPARATELY.

ALL CONCRETE SHALL BE CLASS "S" WITH A MINIMUM 28 DAY COMPRESSIVE STRENGTH F'C=3500 PSI. CONCRETE SHALL BE POURED IN THE DRY AND ALL EXPOSED CORNERS CHAMFERED 3/4" UNLESS NOTED OTHERWISE.

ALL REINFORCING STEEL SHALL CONFORM TO AASHTO M31 OR M53, GRADE 40 (YIELD STRENGTH=40,000 PSI).

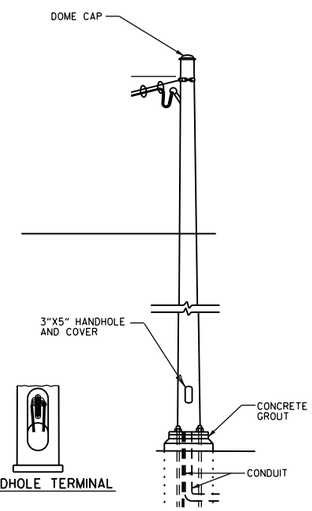

HANDHOLE TERMINAL

SPAN WIRE ASSEMBLY WITH SPAN WIRE SUPPORT POLE

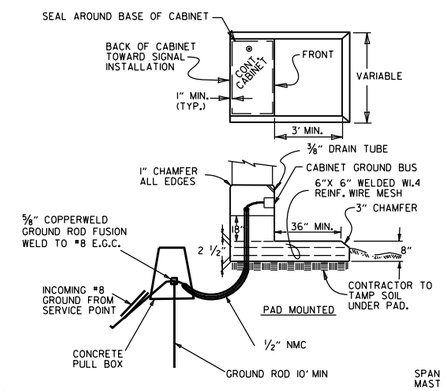

CONCRETE BASE MOUNTED CABINET DETAILS

CABINET NOTE:

UNLESS OTHERWISE DIRECTED BY THE ENGINEER, CABINET ORIENTATION SHALL BE SUCH THAT THE BACK OF THE CABINET IS PARALLEL TO THE STREET AND POSITIONED TO ALLOW VISIBILITY OF THE SIGNAL DISPLAY WHILE OBSERVING THE CONTROLLER FRONT PANEL.

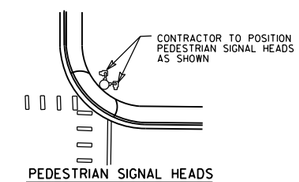

PEDESTRIAN SIGNAL HEADS

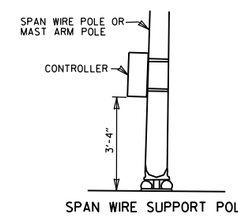

SPAN WIRE SUPPORT POLE AND MAST ARM POLE MOUNTED

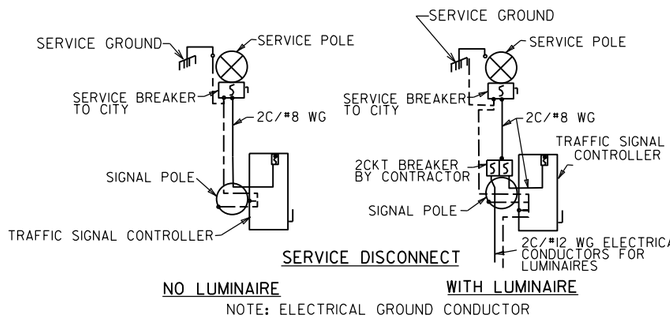

SERVICE DISCONNECT

NO LUMINAIRE

WITH LUMINAIRE

NOTE: ELECTRICAL GROUND CONDUCTOR IS BONDED TO ALL METAL ENCLOSURES

NOTES:

EACH ITEM "TRAFFIC SIGNAL HEAD (4 SEC., 1-WAY)" SHALL INCLUDE A SIGN (R10-12a) AS SHOWN, ATTACHED TO THE MAST ARM OR SPAN ASSEMBLY 12" TO THE RIGHT OF THE SIGNAL HEAD UNLESS REMOVED WITHIN SIGNAL PLAN NOTES.

EACH ITEM "TRAFFIC SIGNAL HEAD (3 SEC., 1-WAY)", TO BE USED AS A LEFT TURN INDICATION ONLY SHALL INCLUDE A SIGN (R10-10) AS SHOWN, ATTACHED TO THE MAST ARM OR SPAN ASSEMBLY 12" TO THE RIGHT OF THE SIGNAL HEAD.

ALL SIGN BLANK SHALL BE CONSTRUCTED OF ALUMINUM ALLOY (ASTM DESIGNATION B-209, ALLOY 5052-H38) WITH A THICKNESS OF 0.100 INCH.

ALL SIGN FACES SHALL BE CONSTRUCTED OF HIGH INTENSITY SHEETING (TYPE III) WITH SILKSCREEN LEGEND AND BORDER.

TETHER STRAND SHALL BE EITHER 5/32" OR 3/16" HIGH FATIGUE STAINLESS STEEL AIRCRAFT CABLE IN 7/19 CONFIGURATION, MIL-W-83420 CERTIFIED, WITH A MINIMUM STRENGTH OF 2400 LB.

SIGNAL OPERATION NOTES:

FLASHING OPERATION - PRIOR TO NORMAL OPERATION, SIGNAL SHALL BE FLASHED FOR A PERIOD OF 3 TO 5 WORK DAYS. SIGNAL SHALL BE PLACED IN OPERATION ONLY ON A REGULAR WORK DAY, EXCEPT FRIDAY.

THE CONTRACTOR MAY BE REQUIRED TO ALTER THE FLASHING DISPLAY DURING THE TEMPORARY FLASH PERIOD. AT THE TIME THE INTERSECTION IS PLACED IN PERMANENT OPERATION, THE FLASH SEQUENCE SHALL THEN BE RETURNED TO THAT INDICATED ON THE PLAN SHEETS. NO ADDITIONAL COMPENSATION SHALL BE ALLOWED FOR THESE ALTERATIONS IN FLASH SEQUENCE.

FOUNDATION NOTES:

ALL REINFORCING STEEL SHALL BE GRADE 40 MINIMUM.

SPAN WIRE POLES WITH A 9" OR 10" POLE BASE SHALL USE FOUNDATIONS THAT ARE 30" IN DIAMETER AND 9'-0" IN DEPTH. VERTICAL REINFORCING STEEL SHALL BE 12-#7 @ 102". HORIZONTAL REINFORCING STEEL SHALL BE 13-#4 @ 8.333" O.C.

SPAN WIRE POLES WITH AN 11", 12", OR 13" POLE BASE SHALL USE FOUNDATIONS THAT ARE 30" IN DIAMETER AND 12'-0" IN DEPTH. VERTICAL REINFORCING STEEL SHALL BE 12-#7 @ 138". HORIZONTAL REINFORCING STEEL SHALL BE 17-#4 @ 8.5" O.C.

ALL PED POLES SHALL USE FOUNDATIONS THAT ARE 30" IN DIAMETER AND 7'-0" IN DEPTH. VERTICAL REINFORCING STEEL SHALL BE 12-#7 @ 78". HORIZONTAL REINFORCING STEEL SHALL BE 10-#4 @ 8.44" O.C.

MINIMUM STRUCTURAL REQUIREMENTS:

DESIGN SPECIFICATIONS: AASHTO STANDARD SPECIFICATIONS FOR STRUCTURAL SUPPORTS FOR HIGHWAY SIGNS, LUMINAIRES AND TRAFFIC SIGNALS, 4TH EDITION (2001) WITH 2003 AND 2006 INTERIMS.

USE FATIGUE CATEGORY II.
CONSTRUCTION SPECIFICATIONS: STANDARD SPECIFICATIONS FOR HIGHWAY CONSTRUCTION (CURRENT EDITION) WITH APPLICABLE SUPPLEMENTAL SPECIFICATIONS AND SPECIAL PROVISIONS.

BASE WIND SPEED: 90 MPH

STEEL MEMBERS CONSIDERED MAIN LOAD CARRYING MEMBERS WITH THICKNESS GREATER THAN 1/2" SHALL MEET THE LONGITUDINAL CHARPY V-NOTCH TEST SPECIFIED IN SUBSECTION 807.05 OF THE STANDARD SPECIFICATIONS.

DATE	REVISION	FILMED
02-13-24	REVISED SPECIAL SIGN TO R10-12a SIGN	
11-16-17	REVISED NOTES. ADDED SPAN WIRE SUPPORT POLE DETAIL AND HANDHOLE TERMINAL DETAIL	
02-27-14	REVISED NOTES.	
09-12-13	ISSUED AS STANDARD DRAWING	
07-21-11	REVISED PEDESTRIAN SIGN & GROUNDING	
05-21-09	REVISED GROUNDING	
09-10-08	REV. STEEL AIRCRAFT CABLE CONFIGURATION NOTE	
07-31-08	REVISED GROUNDING	
04-18-08	REVISED AASHTO NOTES	
04-17-08	REVISED TO 2001 AASHTO STANDARDS	
10-12-04	REV. CABINET ORIENTATION & SIGNAL OPERATION	
05-22-02	REVISED	
12-27-99	REVISED	
11-18-98	REVISION TO NOTES	
11-21-95	ISSUED	

ARKANSAS STATE HIGHWAY COMMISSION

SPAN WIRE ASSEMBLY STEEL POLE

STANDARD DRAWING SD-3

LOOP DETECTOR INSTALLATION AND TESTING

NOTES:

1. LOOPS WITH A PERIMETER GREATER THAN 40' SHALL HAVE TWO TURNS. LOOPS WITH A PERIMETER LESS THAN OR EQUAL TO 40' SHALL HAVE THREE TURNS, UNLESS OTHERWISE NOTED ON THE PLANS. QUADRUPOLE LOOPS SHALL BE TWO TURNS IN A (2-4-2 CONFIGURATION), UNLESS OTHERWISE NOTED ON THE PLANS.
2. LOOP AND FEEDER WIRE SHALL BE CONTINUOUS WITHOUT SPLICES EXCEPT AT THE LOOP/FEEDER WIRE SPLICE AS SHOWN. SPLICES SHALL BE ROSIN SOLDERED AND WATERPROOFED WITH AN ACCEPTED SPLICE KIT. A DRIAN WIRE SHALL BE GROUNDED IN THE CABINET AND INSULATED AT THE LOOP TO FEEDER WIRE SPLICE.
3. THE LOOP TO FEEDER WIRE SPLICE, THE FEEDER WIRE JACKET AND LOOP WIRE JACKET IN DUCT SHALL BE COMPLETELY SEALED AND WATERPROOFED.
4. THE CONTRACTOR MAY MAKE CONNECTIONS TO THE SIGNAL CABLE AND LOOP TO FEEDER WIRE CONNECTION AT THE TERMINAL STRIPS MOUNTED TO POLE INSIDE THE HAND HOLD COVER AS SHOWN IN DETAIL. HANDHOLE TERMINALS MUST BE EASILY ACCESSIBLE, BUT PROTECTED AGAINST ACCIDENTAL CONTACT. THE CONNECTION OF POWER CARRYING CIRCUITS MUST BE SEPERATED FROM LOOP OR LOGIC CIRCUITS. ALL CONNECTIONS TO TERMINAL STRIPS SHALL UTILIZE SPADE LUGS OR AS APPROVED BY THE ENGINEER.
5. EACH LOOP SHALL HAVE A SEPERATE "FEEDER WIRE" UNLESS OTHERWISE NOTED ON THE PLANS. ALL FEEDER WIRES SHALL BE LABELED AS TO LOOP NUMBER AS DESIGNATED ON THE PLANS.
6. ALL LOOP WIRE ENTERING CONCRETE PULL BOXES SHALL BE ENCLOSED IN CONDUIT. EACH LOOP WIRE SHALL ENTER CONCRETE PULL BOX OR POLE BASE THROUGH A SEPARATE PIECE OF ONE (1.25") INCH CONDUIT.
7. LOOP WIRE FROM LOOP TO CONDUIT IS NOT TWISTED. LOOP WIRE IN THE CONDUIT MUST BE TWISTED TWO TO FIVE TURNS PER FOOT.
8. "30-DAY PERFORMANCE TEST SHALL NOT COMMENCE UNTIL ALL LOOPS ARE TESTED BY THE CONTRACTOR, THEN APPROVED AND ACCEPTED BY THE ENGINEER, AND THE TESTING RECORDS HAVE BEEN SUBMITTED TO THE ENGINEER. THE WARRENTY PERIOD FOR LOOPS SHALL NOT COMMENCE UNTIL TESTED BY THE CONTRACTOR AND ACCEPTED BY THE ENGINEER. THE CONTRACTOR SHALL PERFORM TEST AND PROVIDE A RECORD TO THE ENGINEER AS LISTED IN THE LOOP DETECTOR TESTING PROCEDURE.
9. UNLESS OTHERWISE APPROVED BY THE ENGINEER, BACKER ROD SHALL BE INSTALLED IN SHORT SECTIONS SPACED NO MORE THAN 18" APART AND WEDGED INTO THE SLOT TO THE CABLE IN PLACE. CABLE SHALL BE TOTALLY ENCAPSULATED IN SEALER.
10. "HOT POUR" SEALER SHALL NOT ALLOW WITH 705-LOOP WIRING IN DUCT.
11. WHERE UNDERGROUND SPLICES OF SIGNAL CABLE ARE REQUIRED. CONNECTIONS SHALL BE SOLDERED AND COMPLETELY WATERPROOFED TO THE SATISIFACTION OF THE ENGINEER. WATERPROOFING SHALL EXTEND A MININUM OF TWO (2") INCHES PAST THE SIGNAL CABLE JACKET AND SHALL COMPLETELY COVER ALL INDIVIDUAL CONDUCTORS OF THE SIGNAL CABLE. WATERPROOFING DOES NOT APPLY TO CONNECTIONS MADE IN POLE BASES.
12. THE CONTRACTOR SHALL CONNECT A SEPARATE NEUTRAL FOR EACH LOAD SWITCH REPRESENTED ON EACH SIGNAL POLE. ONLY ONE NEUTRAL IS REQUIRED FOR PEDESTRIAN SIGNALS. A SEPERATE 5C (TYPICAL) IS PROVIDED FOR PEDESTRIAN PUSH BUTTONS.
13. TRAFFIC CONTROLLER CABINET LAYOUT SHALL BE SUCH THAT IT IS NOT NECESSARY TO SHUT DOWN POWER TO REMOVE LOAD SWITCHES IN ORDER TO EASILY TEST OR MODIFY DETECTOR INPUTS TO THE CONTROLLER. THE CONTROLLER CABINET SHALL BE WIRED SUCH THAT THE POWER TO LOAD SWITCHES CANNOT BACKFEED TO THE LOAD SWITCH POWER BUSS DURING FLASH OPERATION.

TYPICAL PROCEDURE FOR DETECTOR LOOP TESTING

1. DISCONNECT AND TEST CONTINUITY (< 10 OHMS) IF CONTINUITY IS BAD, GO TO TEST 3.
2. TEST INSULATION (@ 500 VOLT TEST > 10 MEG-OHM)

   IF TESTS 1& 2 ARE GOOD, NO FURTHER TESTING IS NECESSARY. RECORDED RESULTS CONSIST OF TESTS 1& 2 FROM CONTROL CABINET WITH FEEDER WIRE CONNECTED TO LOOP.
3. OPEN SPACE (DO NOT BREAK CONNECTION) REPEAT TEST 1& 2 IF TEST 3 IS BAD, GO TO TEST 4.
4. BREAK SPLICE, INSTALL JUMPER IN CABINET, REPEAT TESTS 1& 2 SEPARATELY FOR FEEDER AND FOR LOOP.

FAILURES TYPICALLY RESULT FROM BROKEN WIRE IN PAVEMENT, FAULTY INSULATION OF LOOP OR FEEDER WIRE, OR POORLY INSULATED SPLICE CONNECTION.

SERIES CONNECTED LOOPS

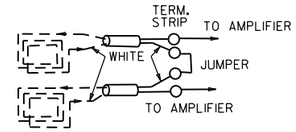

WIND LOOPS COUNTERCLOCKWISE; TAG WIRE EXITING SLOT AND TIE TO WHITE LEAD OF FEEDER WIRE; WHEN LOOPS ARE TIED TO SAME VEHICLE DETECTOR, SERIES CONNECT IN CABINET AS SHOWN.

HANDHOLE TERMINAL

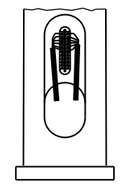

QUADRUPOLE LOOP

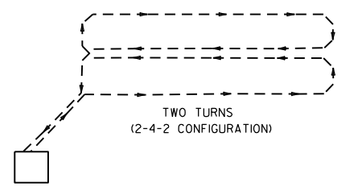

TRAFFIC SIGNAL PRE-EMPTION INTERFACE WIRING DIAGRAM

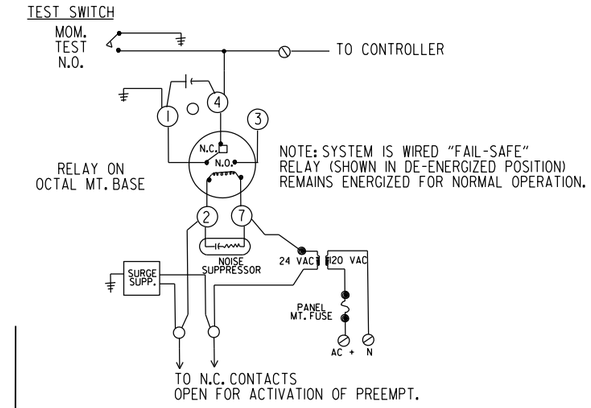

TYPICAL INTERSECTION

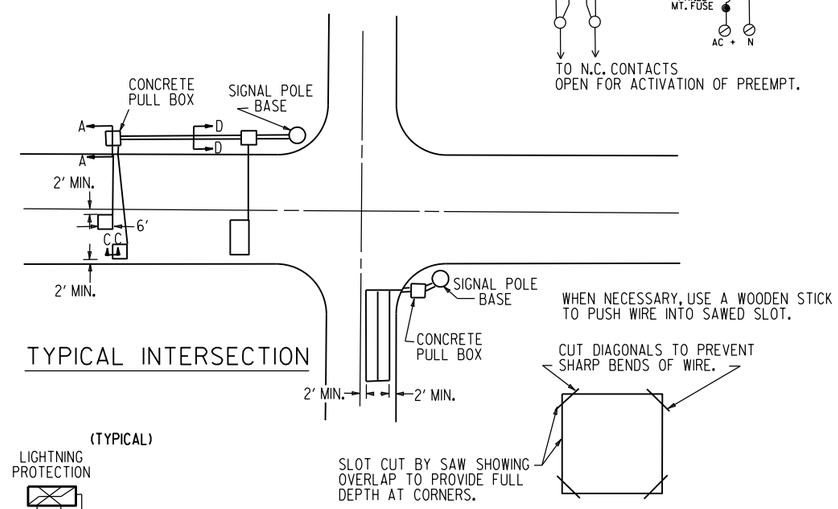

TRENCHING DETAIL

(FOR SAW CUT TRENCH IN ROADWAY)

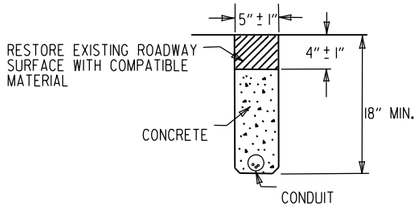

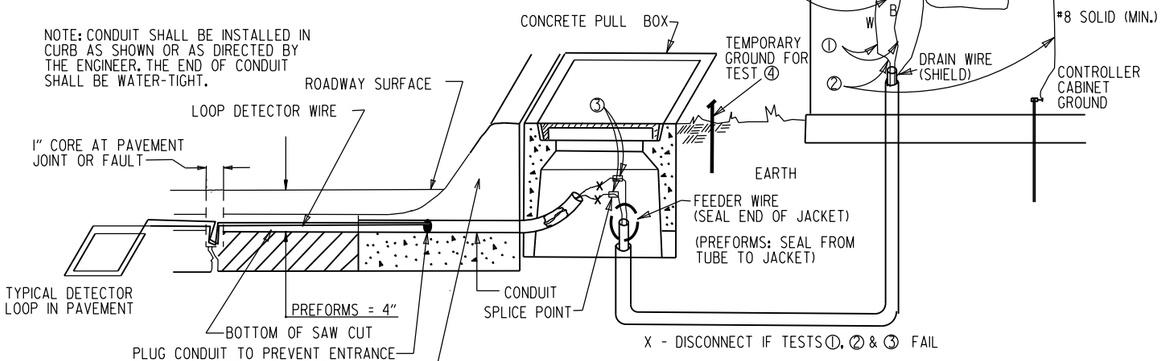

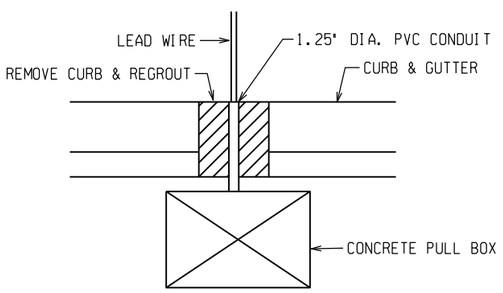

SECTION A-A

1'-6" CONCRETE COMBINATION CURB AND GUTTER

SPECIAL NOTE:
IF FEEDER WIRE JACKET IS LEFT UNSEALED AND WATER IS ALLOWED TO ENTER JACKET, CONTRACTOR WILL BE REQUIRED TO REPLACE FEEDER WIRE AT NO COST TO DEPARTMENT.

TYPICAL SECTIONS FOR PULSE AND PRESENCE LOOP DETECTORS

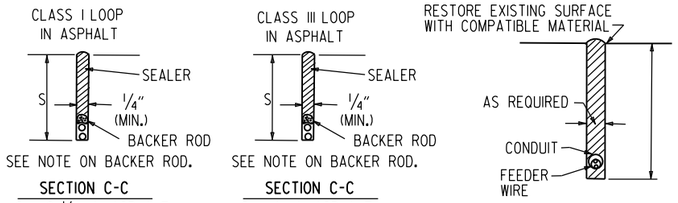

SECTION C-C
S = 2 1/2" IN ASPHALT
S = 2" IN CONCRETE

SECTION C-C
S = 4" IN ASPHALT
S = 4" IN CONCRETE

SECTION D-D

DATE	REVISION	FILMED
11-07-19	REVISED NOTE 6 & TYPICAL FOR PRESENCE LOOP DETECTORS	
11-16-17	REVISED NOTES	
09-12-13	ISSUED AS STANDARD DRAWING	
05-17-01	REVISED	
04-11-01	REVISED	
02-04-00	REVISED PRE-EMPTION TEST SWITCH	
11-18-98	REVISED NOTES	
11-21-95	ISSUED	

ARKANSAS STATE HIGHWAY COMMISSION

LOOP DETECTOR INSTALLATION

STANDARD DRAWING SD-4

DRAWER PLAN VIEW

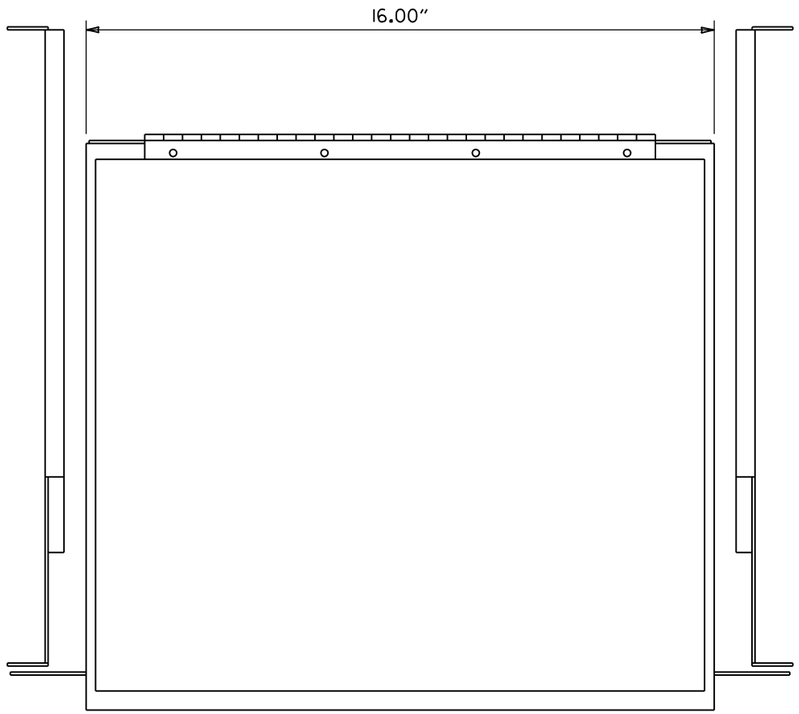

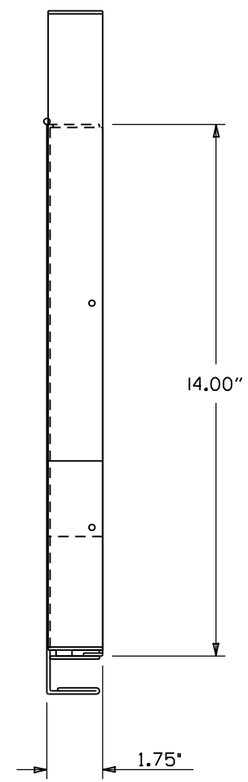

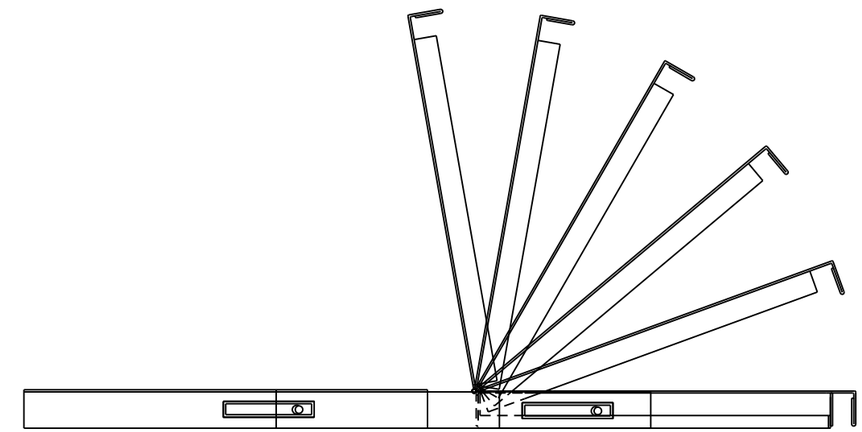

NOTES:
1. RIGHT HAND SLIDE SHOWN. LEFT SLIDE OPPOSITE.
2. GENERAL DEVICES (CC3002-99-0102) OR EQUAL AND CONTAINS (1) RIGHT HAND SLIDE ASSEMBLY, (1) LEFT HAND SLIDE ASSEMBLY.
3. ALL HARDWARE NECESSARY TO FASTEN SLIDE ASSEMBLY TO UNDERSIDE OF CONTROLLER SHELF SHALL BE INCLUDED.

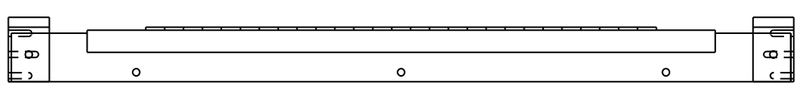

FRONT VIEW

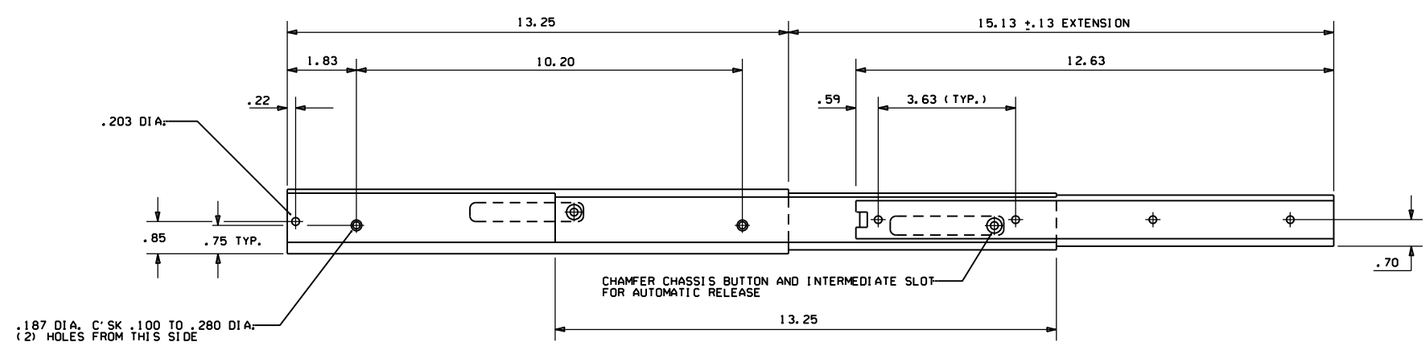

RIGHT SIDE ASSEMBLY

DATE	REVISION	DATE FILM
9-12-13	ISSUED AS STANDARD DRAWING	
6-15-05	ISSUED	

ARKANSAS STATE HIGHWAY COMMISSION

CONTROLLER CABINET UTILITY DRAWER

STANDARD DRAWING SD-5

CONDUIT ENTRY TO EXISTING POLE BASE

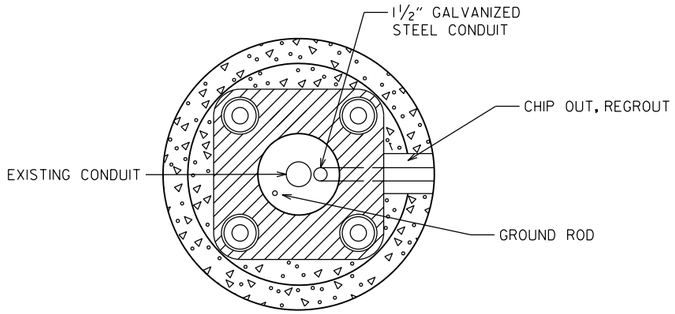

ANCHOR BASE

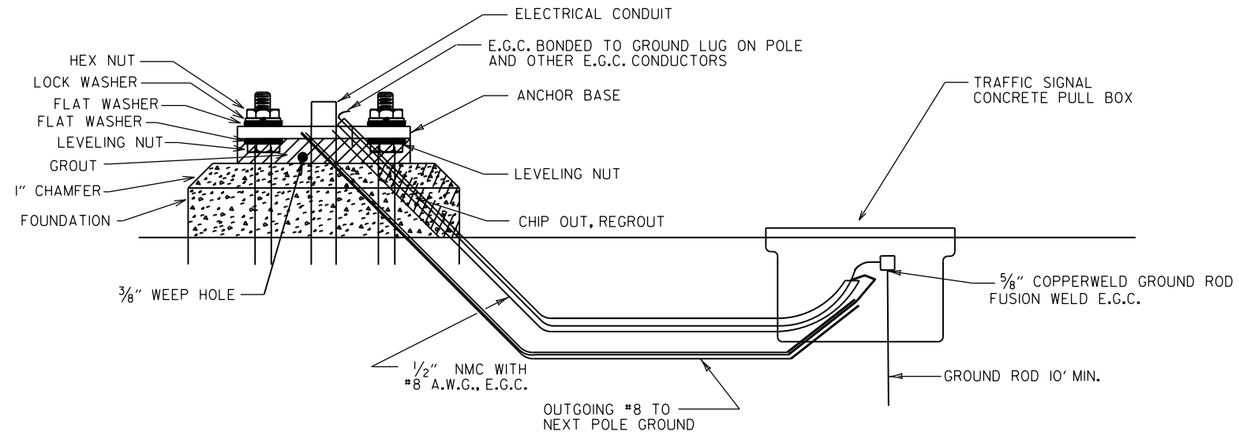

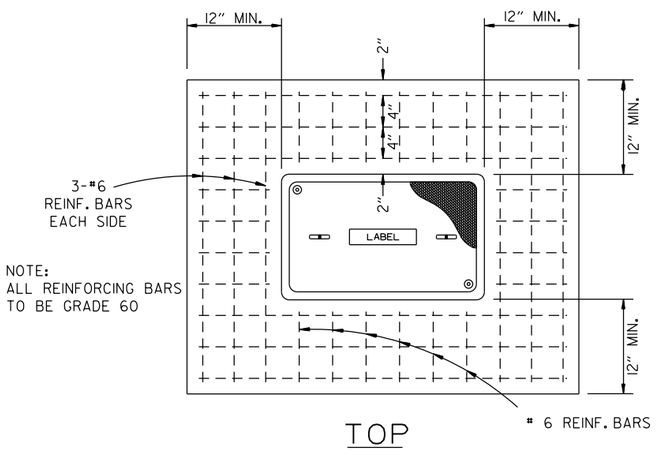

TOP

TYPE "HD" CONCRETE PULL BOX DETAIL

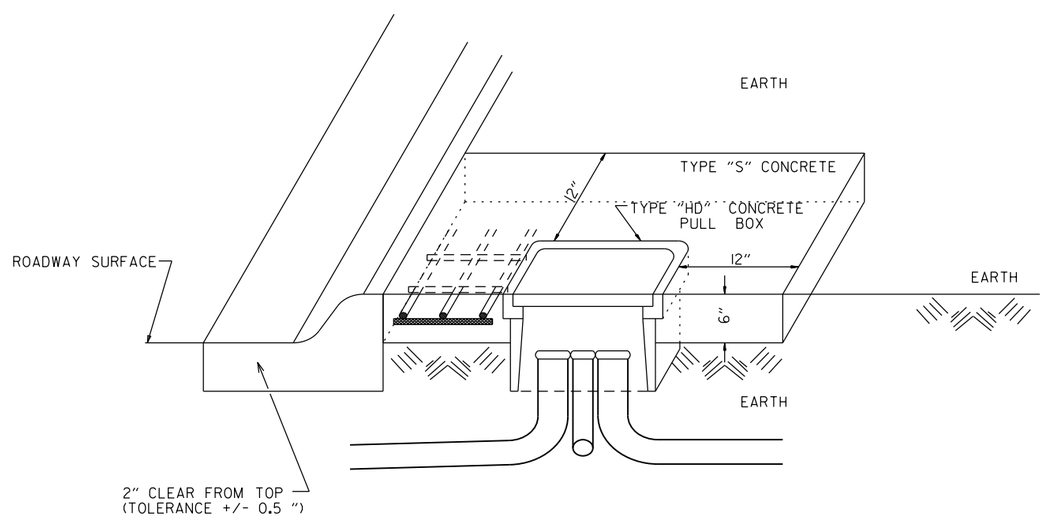

CONDUIT ENTRY TO EXISTING CONTROLLER CABINET

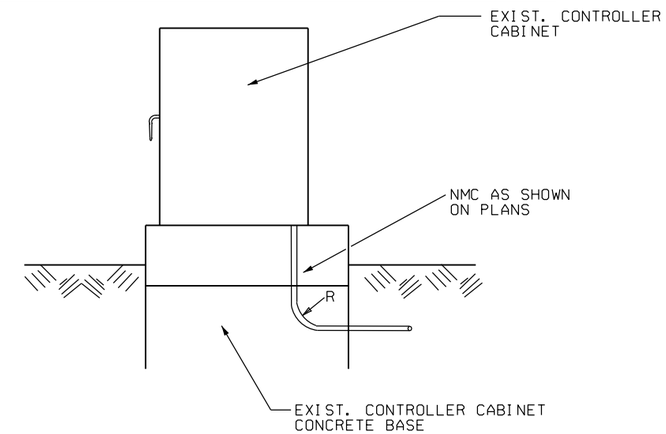

NOTE: ENTRY TO CABINET SHALL BE THROUGH A CUT IN THE BASE SUFFICIENT TO PROVIDE ADEQUATE CONDUIT RADIUS FOR ITEM.

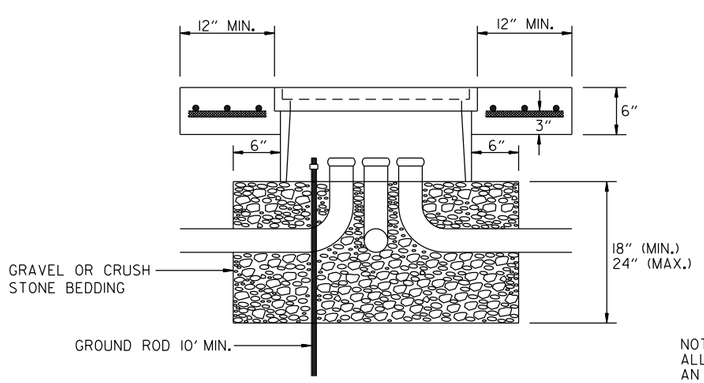

ELEVATION

NOTE:
ALL TYPE 1 HD, TYPE 2 HD, AND TYPE 3 HD CONCRETE PULL BOXES ARE INSTALLED WITH AN APRON OF CONCRETE 12" WIDE AND 6" IN DEPTH. ALL PAYMENT SHALL BE INCLUDED IN THE PRICE OF THE TYPE HD CONCRETE PULL BOX. THE CONCRETE PULL BOX SHALL BE INSTALLED FLUSH TO SURROUNDING GRADE UNLESS OTHERWISE INSTRUCTED BY THE ENGINEER. THE CONCRETE SHALL BE CLASS "S". THREE #6 REINFORCING BARS IN THE APRON ON ALL SIDES OF THE CONCRETE PULL BOX IS REQUIRED IN CONCRETE.

DATE	REVISION	FILMED
02-13-24	REVISED NOTES AND TYPE "HD" CONCRETE PULL BOX DETAILS	
11-16-17	REVISED NOTES	
09-02-15	REVISED PULL BOX DEPTH	
09-12-13	ISSUED AS STANDARD DRAWING	
05-21-09	REVISED GROUNDING	
07-31-08	ADDED & REVISED CONDUIT ENTRY	
06-23-04	REVISED CLEARANCE AT CURB ENTRY	
01-04-02	ADDED REINFORCING TO BOX APRON	
07-02-01	REVISED	
12-27-99	REVISED NOTES	
11-18-98	ISSUED	

ARKANSAS STATE HIGHWAY COMMISSION

HEAVY DUTY PULL BOX

STANDARD DRAWING SD-6

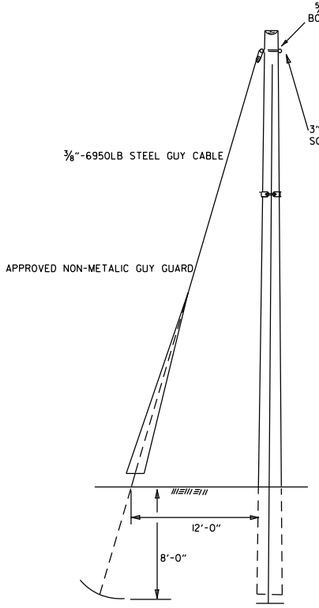

NOTE:
EXPANDING ANCHOR SHALL BE 6000# STRAIN OR GREATER. IT SHALL BE A "NEW CHANCE 8-WAY EXPANDING ANCHOR", WITH A 5/8" MINIMUM GUY ROD.

STANDARD GUY INSTALLATION

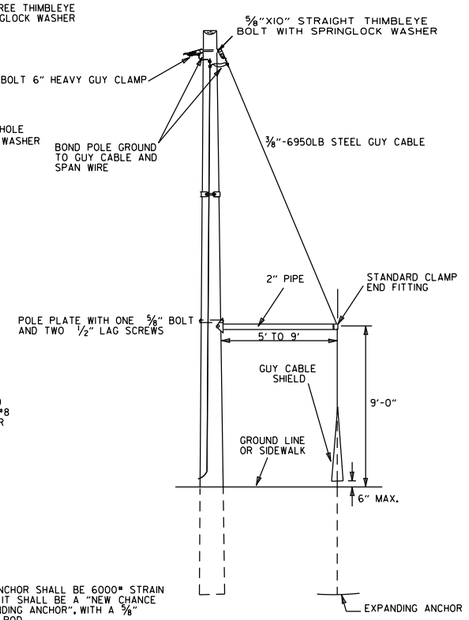

SIDEWALK GUY INSTALLATION

NOTE:
CONDUIT INSTALLATION MAY BE ADJUSTED BY THE ENGINEER TO MEET FIED CONDITIONS.

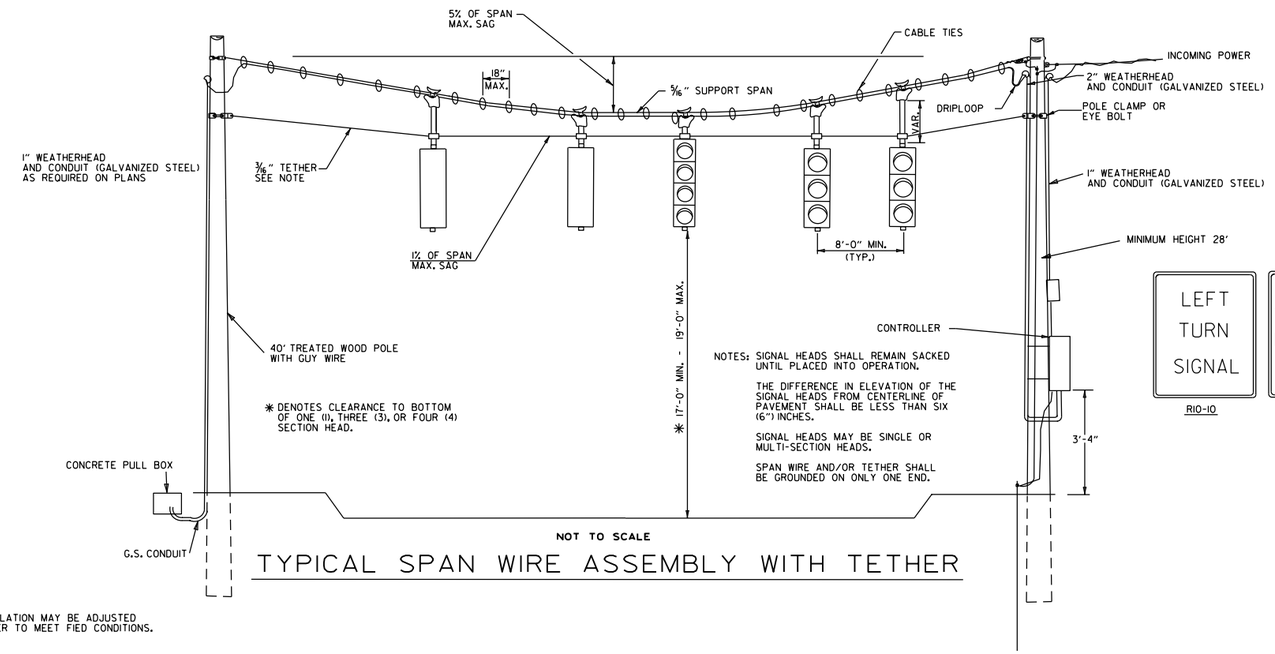

* DENOTES CLEARANCE TO BOTTOM OF ONE (1), THREE (3), OR FOUR (4) SECTION HEAD.

NOTES: SIGNAL HEADS SHALL REMAIN SACKED UNTIL PLACED INTO OPERATION.

THE DIFFERENCE IN ELEVATION OF THE SIGNAL HEADS FROM CENTERLINE OF PAVEMENT SHALL BE LESS THAN SIX (6") INCHES.

SIGNAL HEADS MAY BE SINGLE OR MULTI-SECTION HEADS.

SPAN WIRE AND/OR TETHER SHALL BE GROUNDED ON ONLY ONE END.

NOT TO SCALE

TYPICAL SPAN WIRE ASSEMBLY WITH TETHER

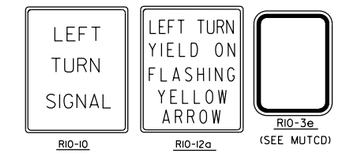

R10-10 R10-12a R10-3e (SEE MUTCD)

NOTES:
SPAN WIRE POLES SHALL BE MOUNTED A MINIMUM OF FOUR (4') FEET BEHIND CURB OR SHOULDER.

SPAN WIRE ASSEMBLIES WILL REQUIRE TETHER UNLESS OTHERWISE NOTED ON PLAN SHEETS.

CABLE TIES SHALL BE SUITABLE FOR OUTSIDE USE (BLACK).

THE CONTROLLER POWER SUPPLY GROUND BUSS SHALL BE BONDED TO THE FOUNDATION GROUND ROD WITH A #8 A.W.G. SOLID COPPER WIRE. ON EXISTING FOUNDATIONS WITH NO GROUND ROD, CONTRACTOR SHALL INSTALL A 10' X 5/8" COPPERWELD GROUND ROD.

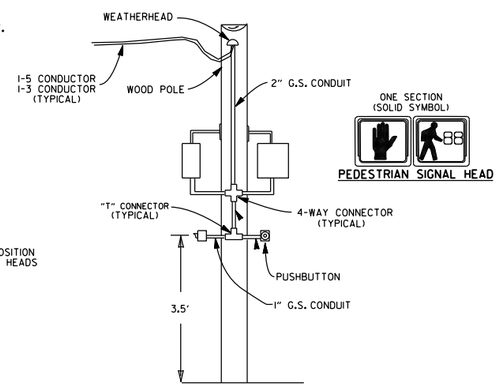

WOODEN POLE INSTALLATION OF PED HEADS

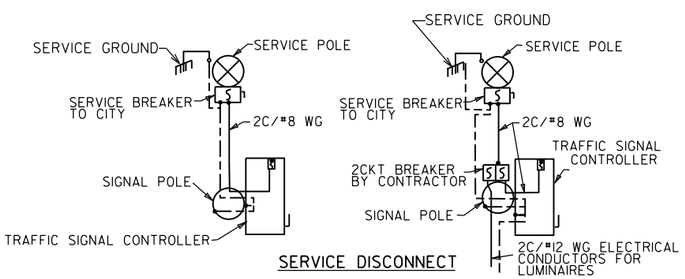

SERVICE DISCONNECT

NO LUMINAIRE WITH LUMINAIRE

NOTE: ELECTRICAL GROUND CONDUCTOR IS BONDED TO ALL METAL ENCLOSURES

NOTES:

EACH ITEM "TRAFFIC SIGNAL HEAD (4 SEC., 1-WAY)" SHALL INCLUDE A SIGN (R10-12a) AS SHOWN, ATTACHED TO THE MAST ARM OR SPAN ASSEMBLY 12" TO THE RIGHT OF THE SIGNAL HEAD UNLESS REMOVED WITHIN SIGNAL PLAN NOTES.

EACH ITEM "TRAFFIC SIGNAL HEAD (3 SEC., 1-WAY)", TO BE USED AS A LEFT TURN INDICATION ONLY, SHALL INCLUDE A SIGN (R10-10) AS SHOWN, ATTACHED TO THE MAST ARM OR SPAN ASSEMBLY 12" TO THE RIGHT OF THE SIGNAL HEAD.

ALL SIGN BLANKS SHALL BE CONSTRUCTED OF ALUMINUM ALLOY (ASTM DESIGNATION B-209, ALLOY 5052-H38) WITH A THICKNESS OF 0.100 INCH.

ALL SIGN FACES SHALL BE CONSTRUCTED OF HIGH INTENSITY SHEETING (TYPE III) WITH SILKSCREEN LEGEND AND BORDER.

SIGNAL OPERATION NOTES:

FLASHING OPERATION - PRIOR TO NORMAL OPERATION, SIGNAL SHALL BE FLASHED FOR A PERIOD OF 3 TO 5 WORK DAYS. SIGNAL SHALL BE PLACED IN OPERATION ONLY ON A REGULAR WORK DAY, EXCEPT FRIDAY.

THE CONTRACTOR MAY BE REQUIRED TO ALTER THE FLASHING DISPLAY DURING THE TEMPORARY FLASH PERIOD. AT THE TIME THE INTERSECTION IS PLACED IN PERMANENT OPERATION, THE FLASH SEQUENCE SHALL THEN BE RETURNED TO THAT INDICATED ON THE PLAN SHEETS. NO ADDITIONAL COMPENSATION SHALL BE ALLOWED FOR THESE ALTERATIONS IN FLASH SEQUENCE.

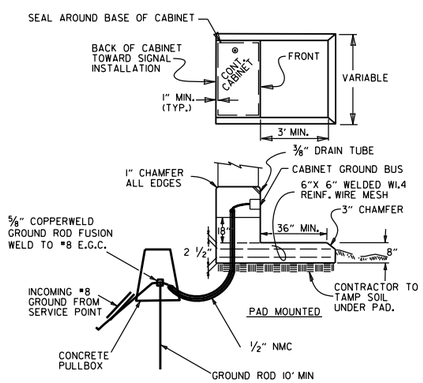

CONCRETE BASE MOUNTED CABINET DETAILS

CABINET NOTE:

UNLESS OTHERWISE DIRECTED BY THE ENGINEER, CABINET ORIENTATION SHALL BE SUCH THAT THE BACK OF THE CABINET IS PARALLEL TO THE STREET AND POSITIONED TO ALLOW VISIBILITY OF THE SIGNAL DISPLAY WHILE OBSERVING THE CONTROLLER FRONT PANEL.

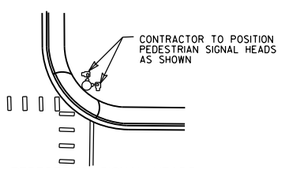

PEDESTRIAN SIGNAL HEADS

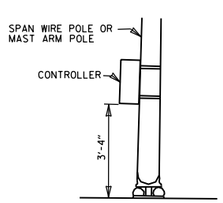

SPAN WIRE SUPPORT POLE AND MAST ARM POLE MOUNTED

MINIMUM STRUCTURAL REQUIREMENTS:

DESIGN SPECIFICATIONS: AASHTO STANDARD SPECIFICATIONS FOR STRUCTURAL SUPPORTS FOR HIGHWAY SIGNS, LUMINAIRES AND TRAFFIC SIGNALS, 4TH EDITION (2001) WITH 2003 AND 2006 INTERIMS.

CONSTRUCTION SPECIFICATIONS: STANDARD SPECIFICATIONS FOR HIGHWAY CONSTRUCTION (CURRENT EDITION) WITH APPLICABLE SUPPLEMENTAL SPECIFICATIONS AND SPECIAL PROVISIONS.

BASE WIND SPEED: 90 MPH

STEEL MEMBERS CONSIDERED MAIN LOAD CARRYING MEMBERS WITH THICKNESS GREATER THAN 1/2" SHALL MEET THE LONGITUDINAL CHARPY V-NOTCH TEST SPECIFIED IN SUBSECTION 807.05 OF THE STANDARD SPECIFICATIONS.

DATE	REVISION	FILMED
02-13-24	REVISED SPECIAL SIGN TO R10-12a SIGN	
11-16-17	REVISED NOTES. ADDED SPAN WIRE SUPPORT POLE DETAIL. ADDED PEDESTRIAN SIGNAL HEAD DETAIL	
02-27-14	REVISED NOTES.	
09-12-13	ISSUED AS STANDARD DRAWING	
07-21-11	REVISED PEDESTRIAN SIGN & GROUNDING	
04-17-08	REVISED TO 2001 AASHTO STANDARDS	
10-12-04	REV. CABINET ORIENTATION & SIGNAL OPERATION	
05-22-02	REV. TYP. SPAN WIRE ASSEMBLY	
12-27-99	REVISED	
11-18-98	REVISION TO NOTES	
11-21-95	ISSUED	

ARKANSAS STATE HIGHWAY COMMISSION

SPAN WIRE ASSEMBLY
WOOD POLE

STANDARD DRAWING SD-7

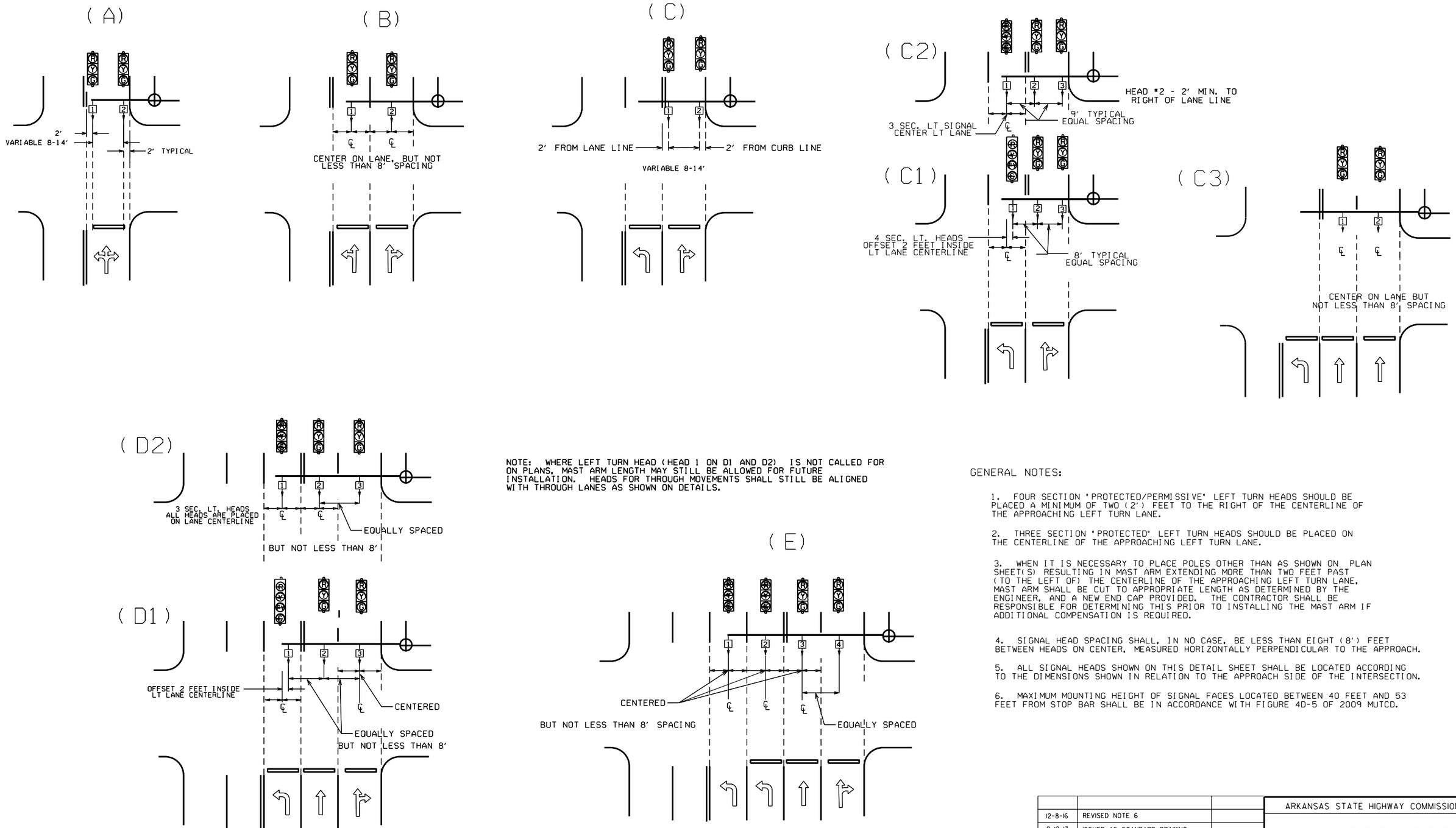

NOTE: WHERE LEFT TURN HEAD (HEAD 1 ON D1 AND D2) IS NOT CALLED FOR ON PLANS, MAST ARM LENGTH MAY STILL BE ALLOWED FOR FUTURE INSTALLATION. HEADS FOR THROUGH MOVEMENTS SHALL STILL BE ALIGNED WITH THROUGH LANES AS SHOWN ON DETAILS.

℄ = CENTER OF LANE FROM APPROACH SIDE

GENERAL NOTES:

1. FOUR SECTION "PROTECTED/PERMISSIVE" LEFT TURN HEADS SHOULD BE PLACED A MINIMUM OF TWO (2') FEET TO THE RIGHT OF THE CENTERLINE OF THE APPROACHING LEFT TURN LANE.

2. THREE SECTION "PROTECTED" LEFT TURN HEADS SHOULD BE PLACED ON THE CENTERLINE OF THE APPROACHING LEFT TURN LANE.

3. WHEN IT IS NECESSARY TO PLACE POLES OTHER THAN AS SHOWN ON PLAN SHEET(S) RESULTING IN MAST ARM EXTENDING MORE THAN TWO FEET PAST (TO THE LEFT OF) THE CENTERLINE OF THE APPROACHING LEFT TURN LANE, MAST ARM SHALL BE CUT TO APPROPRIATE LENGTH AS DETERMINED BY THE ENGINEER, AND A NEW END CAP PROVIDED. THE CONTRACTOR SHALL BE RESPONSIBLE FOR DETERMINING THIS PRIOR TO INSTALLING THE MAST ARM IF ADDITIONAL COMPENSATION IS REQUIRED.

4. SIGNAL HEAD SPACING SHALL, IN NO CASE, BE LESS THAN EIGHT (8') FEET BETWEEN HEADS ON CENTER, MEASURED HORIZONTALLY PERPENDICULAR TO THE APPROACH.

5. ALL SIGNAL HEADS SHOWN ON THIS DETAIL SHEET SHALL BE LOCATED ACCORDING TO THE DIMENSIONS SHOWN IN RELATION TO THE APPROACH SIDE OF THE INTERSECTION.

6. MAXIMUM MOUNTING HEIGHT OF SIGNAL FACES LOCATED BETWEEN 40 FEET AND 53 FEET FROM STOP BAR SHALL BE IN ACCORDANCE WITH FIGURE 4D-5 OF 2009 MUTCD.

DATE	REVISION	DATE FILM
12-8-16	REVISED NOTE 6	
9-12-13	ISSUED AS STANDARD DRAWING	
3-11-10	2009 MUTCD	
12-9-99	ISSUED	

ARKANSAS STATE HIGHWAY COMMISSION

SIGNAL HEAD PLACEMENT

STANDARD DRAWING SD-8

MAIN BREAKER NOT NEAR CONTROLLER CABINET SECONDARY REQUIRED

GROUND ROD - A 10' X 5/8" GROUND ROD SHALL BE INSTALLED IN THE CONCRETE PULL BOX FOR EACH POLE AND THE CONTROLLER. PAYMENT FOR THE GROUND ROD AND 1/2" NMC SHALL BE INCLUDED IN ITEM 701. THE CONCRETE PULL BOX AND CONDUCTOR BOX SHALL BE PAID FOR SEPARATELY.

WITH POWER ISOLATION ASSEMBLY

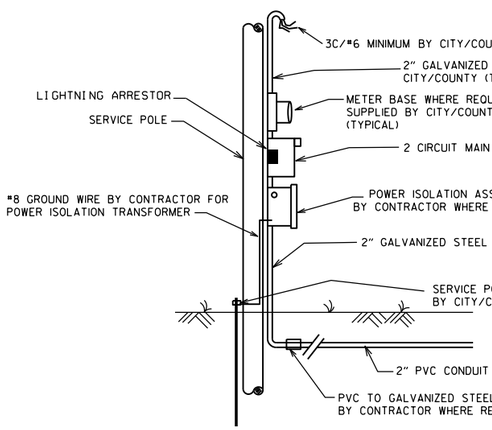

WITHOUT POWER ISOLATION ASSEMBLY

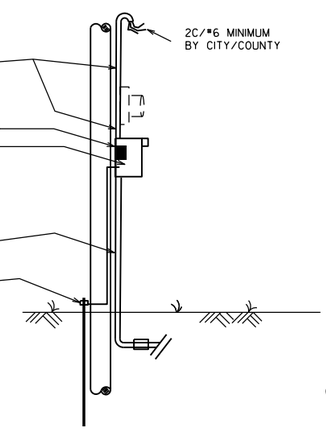

SECONDARY BREAKER BY CONTRACTOR (SUBSIDIARY)

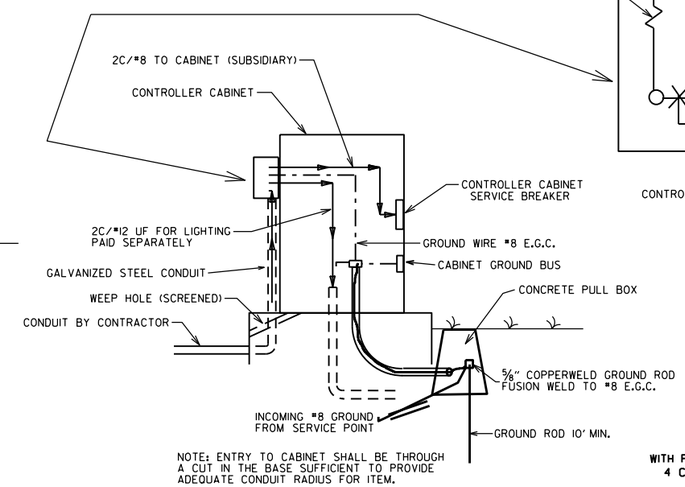

NOTE: ENTRY TO CABINET SHALL BE THROUGH A CUT IN THE BASE SUFFICIENT TO PROVIDE ADEQUATE CONDUIT RADIUS FOR ITEM.

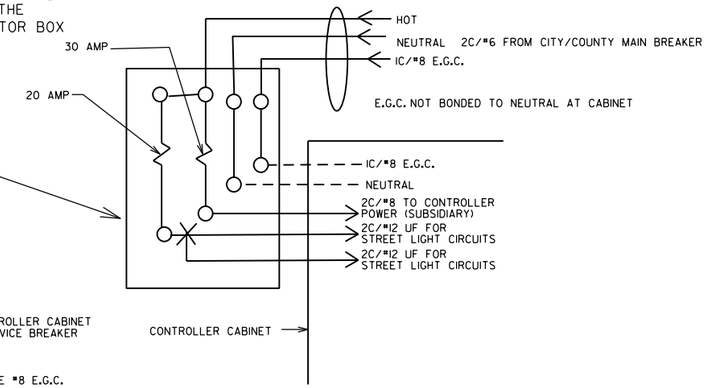

MAIN BREAKER WIRING (TYPICAL)

SERVICE GROUND IS TYPICALLY TIED TO NEUTRAL AT THE MAIN BREAKER. AS SUCH, CONTROLLER GROUND IS NOT TIED TO NEUTRAL AT SECONDARY BREAKER OR IN CONTROLLER CABINET.

NOTES TO CONTRACTOR AND AGENCY RESPONSIBLE FOR MAINTENANCE OF THE INTERSECTION (CITY/COUNTY):

ELECTRICAL SERVICE TYPICALLY FALLS INTO TWO CATEGORIES:
MAIN BREAKER NEAR CONTROLLER CABINET; AND MAIN BREAKER NOT NEAR CONTROLLER CABINET. THE CONTRACTOR'S AND THE CITY'S/COUNTY'S RESPONSIBILITY VARIES ACCORDINGLY AS INDICATED ON THESE DETAILS.

ALL SITUATIONS:
ELECTRICAL SERVICE SHALL BE PROVIDED BY THE CITY/COUNTY TO A SERVICE POLE WITH EXTERNAL RAINTIGHT BREAKER (MAIN BREAKER) AT A MUTUALLY ACCEPTABLE POINT WITHIN THE RIGHT-OF-WAY. SERVICE POINT INCLUDES GALVANIZED STEEL CONDUIT TO A POINT 18" BELOW GROUND LINE, TWO CIRCUIT MAIN BREAKER, LIGHTNING ARRESTOR, POWER ISOLATION ASSEMBLY WHERE REQUIRED, METER LOOP IF REQUIRED BY LOCAL UTILITY COMPANY, ELECTRICAL CONDUCTORS AND WEATHERHEAD. WHERE STREET LIGHTING IS INCLUDED AS PART OF SIGNAL INSTALLATION STREET LIGHTING CIRCUIT (2C/#12 A.W.G. UF RATED, TYPICAL) SHALL BE KEPT SEPARATE FROM THE CIRCUIT SERVING TRAFFIC SIGNAL. SERVICE WIRE AND WIRING FROM THE CONTROLLER TO MAIN BREAKER IS PROVIDED BY THE CONTRACTOR AS A PART OF THIS CONTRACT. WIRE AND WIRING FROM MAIN BREAKER, AND CONNECTION TO THE UTILITY IS THE RESPONSIBILITY OF THE CITY/COUNTY.

MAIN BREAKER NOT NEAR CONTROLLER CABINET:
THE MAIN BREAKER ASSEMBLY, GALVANIZED STEEL CONDUIT. WEATHERHEAD AND WIRE ABOVE MAIN BREAKER AND CONNECTION TO THE UTILITY SHALL BE PROVIDED BY CITY/COUNTY. CONTRACTOR SHALL PROVIDE AS PART OF CONTRACT SECONDARY BREAKER, CONDUIT, WIRE AND WIRING TO THE MAIN BREAKER.

MAIN BREAKER NEAR CONTROLLER CABINET:
ALL COMPONENTS OF THE SERVICE POINT WITH THE EXCEPTION OF THE WIRE AND WIRING ABOVE THE MAIN BREAKER IS FURNISHED AND INSTALLED BY THE CONTRACTOR. WIRING FROM MAIN BREAKER INCLUDING CONNECTION TO THE UTILITY, IS THE RESPONSIBILITY OF THE CITY/COUNTY. IF METER LOOP IS REQUIRED, METER BASE AND HARDWARE IS PROVIDED BY THE CITY/COUNTY AND INSTALLED BY THE CONTRACTOR.

WITH POWER ISOLATION ASSEMBLY
4 CIRCUIT MAIN BREAKER

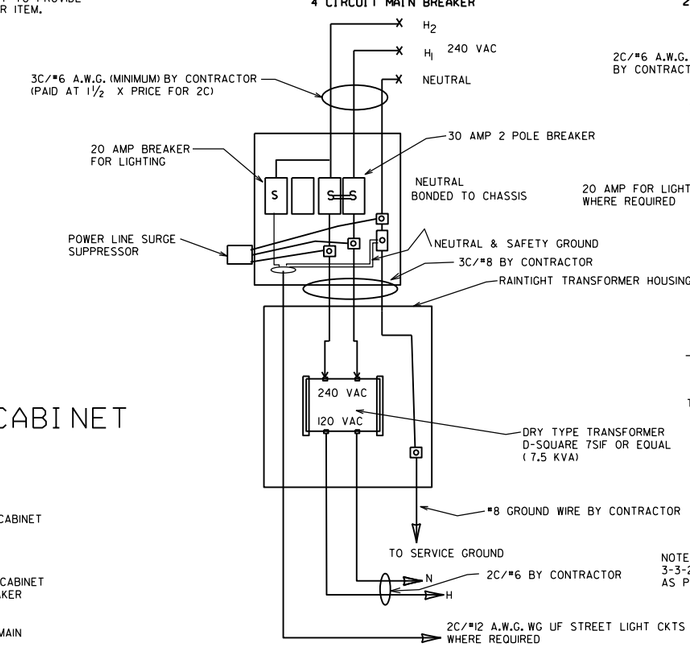

WITHOUT POWER ISOLATION ASSEMBLY
2 CIRCUIT MAIN BREAKER

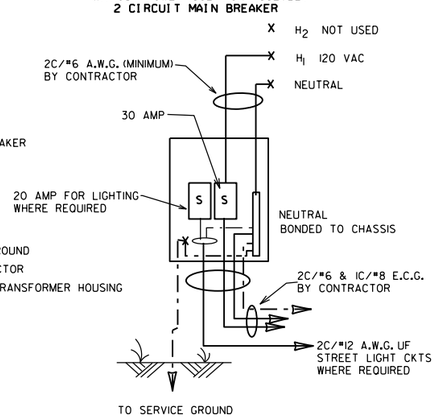

NOTE: ELECTRICAL GROUND CONDUCTOR (E.C.G.) ADDED 3-3-2003, CONSISTING OF A IC/#8 A.W.G. CU GREEN WIRE AS PER NATIONAL ELECT. CODES.

MAIN BREAKER NEAR CONTROLLER CABINET SECONDARY NOT REQUIRED

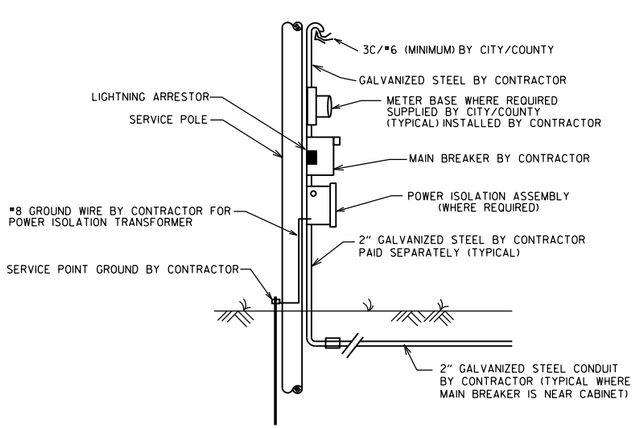

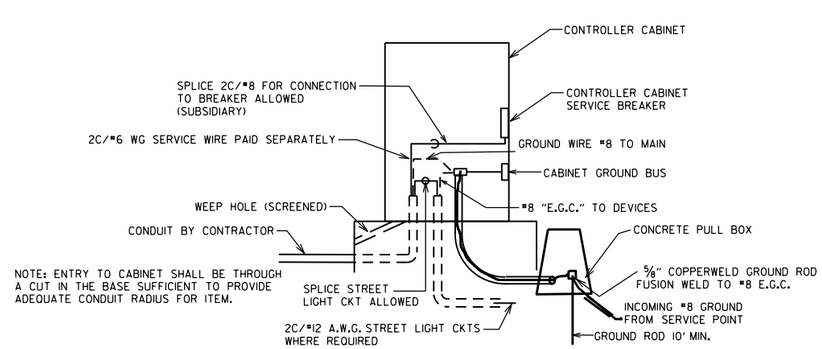

NOTE: ENTRY TO CABINET SHALL BE THROUGH A CUT IN THE BASE SUFFICIENT TO PROVIDE ADEQUATE CONDUIT RADIUS FOR ITEM.

DATE	REVISION	FILMED
11-07-19	REVISED	
11-16-17	REVISED NOTES	
09-12-13	ISSUED AS STANDARD DRAWING	
04-18-13	ADDED LIGHTNING ARRESTOR	
05-21-09	REVISED GROUNDING	
07-31-08	REVISED GROUNDING	
03-03-03	ADDED EGC NOTE	
09-26-01	REVISED	
12-27-99	REVISED	
07-28-99	REVISED	
02-05-99	ISSUED	

ARKANSAS STATE HIGHWAY COMMISSION

SERVICE POINT

STANDARD DRAWING SD-9

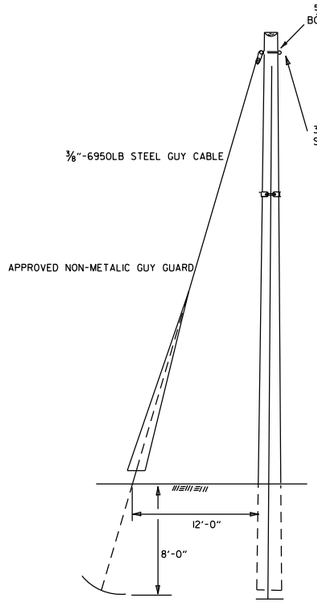

NOTE:
EXPANDING ANCHOR SHALL BE 6000# STRAIN OR GREATER. IT SHALL BE A "NEW CHANCE 8-WAY EXPANDING ANCHOR", WITH A 5/8" MINIMUM GUY ROD.

STANDARD GUY INSTALLATION

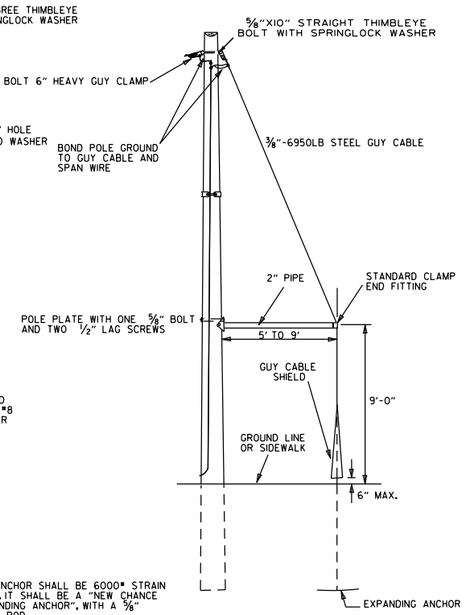

SIDEWALK GUY INSTALLATION

NOTE:
CONDUIT INSTALLATION MAY BE ADJUSTED BY THE ENGINEER TO MEET FIED CONDITIONS.

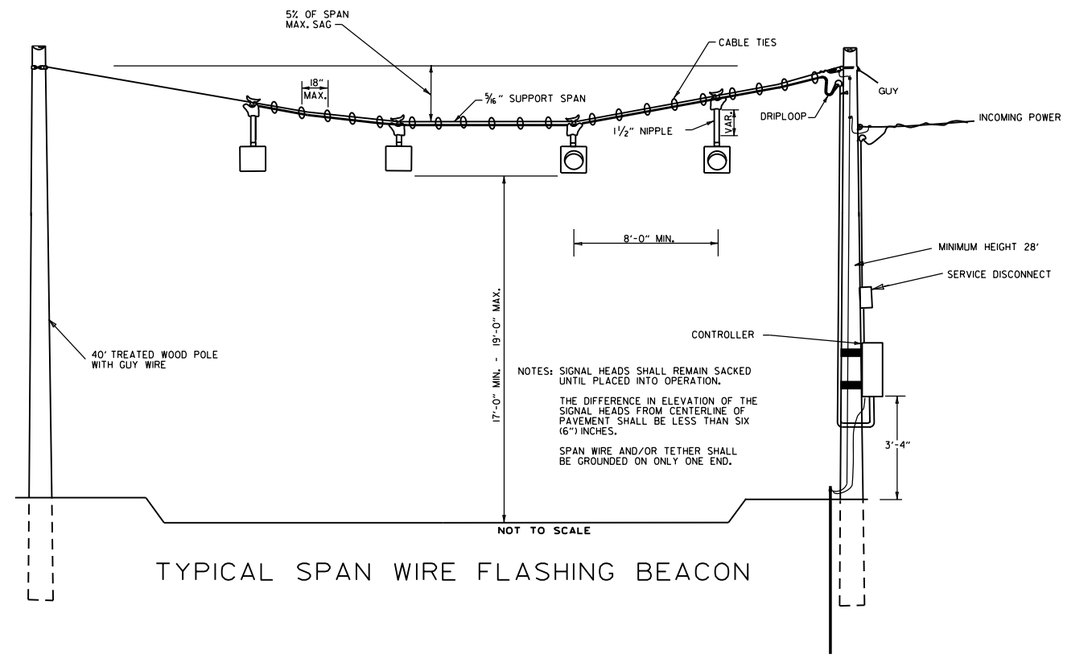

TYPICAL SPAN WIRE FLASHING BEACON

NOTES:
SPAN WIRE POLES SHALL BE MOUNTED A MINIMUM OF FOUR (4') FEET BEHIND CURB OR SHOULDER.

SPAN WIRE ASSEMBLIES WILL REQUIRE TETHER UNLESS OTHERWISE NOTED ON PLAN SHEETS.

CABLE TIES SHALL BE SUITABLE FOR OUTSIDE USE (BLACK).

THE CONTROLLER POWER SUPPLY GROUND BUSS SHALL BE BONDED TO THE GROUND ROD WITH A #8 A.W.G. SOLID COPPER WIRE. ON EXISTING FOUNDATIONS WITH NO GROUND ROD, CONTRACTOR SHALL INSTALL A 10' X 5/8" COPPERWELD GROUND ROD.

GENERAL NOTES:

DESIGN SPECIFICATIONS: AASHTO STANDARD SPECIFICATIONS FOR STRUCTURAL SUPPORTS FOR HIGHWAY SIGNS, LUMINAIRES AND TRAFFIC SIGNALS, 4TH EDITION (2001) WITH 2003 AND 2006 INTERIMS.

CONSTRUCTION SPECIFICATIONS: STANDARD SPECIFICATIONS FOR HIGHWAY CONSTRUCTION (CURRENT EDITION) WITH APPLICABLE SUPPLEMENTAL SPECIFICATIONS AND SPECIAL PROVISIONS.

THE FLASHING BEACON ASSEMBLY SHALL INCLUDE LIGHTNING AND R.F.I. SUPPRESSORS, GALVANIZED STEEL CONDUIT, TRAFFIC SIGNAL CABLE, 12" TRAFFIC SIGNAL HEAD (1 SEC., 1 WAY) WITH YELLOW LENSES ON MAJOR APPROACH AND RED LENSES ON MINOR APPROACH, FLASHING BEACON CONTROLLER AND A SOLID STATE CALANDER DATE TIME CLOCK WITH DAYLIGHT SAVINGS TIME PROGRAMMING AND 48 HOUR POWER FAIL PROTECTION.

THE CITY/COUNTY SHALL BE RESPONSIBLE FOR PROVIDING, THROUGH A LOCAL UTILITY COMPANY, A SERVICE POINT AND UNDERGROUND/AERIAL POWER TO THE FLASHING BEACON CONTROLLER.

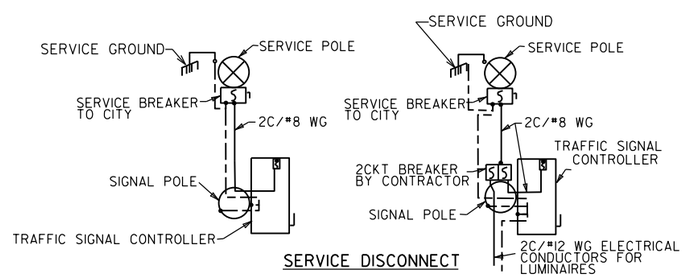

NO LUMINAIRE

WITH LUMINAIRE

NOTE: ELECTRICAL GROUND CONDUCTOR IS BONDED TO ALL METAL ENCLOSURES

AT INTERSECTIONS WITH FLASHING RED ON ONE APPROACH AND FLASHING YELLOW ON OTHER, SUPPLEMENTAL "CROSS TRAFFIC DOES NOT STOP" SHALL BE INSTALLED ON THE SUPPORT FOR THE STOP SIGN PRIOR TO ACTIVATION OF BEACON.

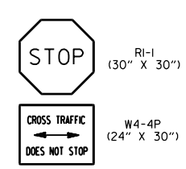

R1-1 (30" X 30")

W4-4P (24" X 30")

TRAFFIC SIGNAL LEGEND

SYMBOL	DEFINITION
	LOOP DETECTOR
	LOOP WIRING
	CONDUIT
Ø A	PHASE A IN PHASING DIAGRAM
2" Ø	2" DIAMETER
1	SIGNAL NO. 1
1	ARROW ON MAST ARM OR SPANWIRE SHOWS DIRECTION OF SIGNAL FACE
	ARROW IN ROADWAY LANE INDICATES DIRECTION OF TRAFFIC IN THE LANE
1 2	SPANWIRE SUPPORT POLES & SPAN WIRE SUPPORTING 2 SIGNALS
1 2	MAST ARM & POLE WITH FOUNDATION SUPPORTING 2 SIGNALS
	CONTROLLER MOUNTED ON SUPPORT POLE
	CONTROLLER MOUNTED ON CONCRETE BASE
	PRECAST CONCRETE PULL BOX

SIGNAL OPERATION NOTES:

FLASHING OPERATION - PRIOR TO NORMAL OPERATION, SIGNAL SHALL BE FLASHED FOR A PERIOD OF 3 TO 5 WORK DAYS. SIGNAL SHALL BE PLACED IN OPERATION ONLY ON A REGULAR WORK DAY, EXCEPT FRIDAY.

DATE	REVISION	FILMED
11-16-17	REVISED NOTES	
09-12-13	ISSUED AS STANDARD DRAWING	
05-11-04	REV. GROUND CONDUCTORS & SIGNING	
12-27-99	REVISED NOTES	
11-17-98	REVISED NOTES	
11-21-95	ISSUED	

ARKANSAS STATE HIGHWAY COMMISSION

WOOD POLE SPAN WIRE INSTALLATION

STANDARD DRAWING SD-10

NOTES:
PEDESTRIAN AND TRAFFIC SIGNAL HEAD SIGNS:
EACH ITEM "TRAFFIC SIGNAL HEAD (4 SEC., 1-WAY)" SHALL INCLUDE A SIGN (R10-12a) AS SHOWN, ATTACHED TO THE MAST ARM OR SPAN ASSEMBLY 12" TO THE RIGHT OF THE SIGNAL HEAD UNLESS REMOVED WITHIN THE SIGNAL PLAN NOTES.

EACH ITEM "TRAFFIC SIGNAL HEAD (3 SEC., 1-WAY)" TO BE USED AS A LEFT TURN INDICATION ONLY SHALL INCLUDE A SIGN (R10-10) AS SHOWN, ATTACHED TO THE MAST ARM OR SPAN ASSEMBLY 12" TO THE RIGHT OF THE SIGNAL HEAD.

EACH PEDESTRIAN PUSHBUTTON SHALL HAVE ONE R10-3E SIGN ATTACHED TO THE POLE ABOVE THE BUTTON. ALL SIGNS SHALL BE MANUFACTURED IN ACCORDANCE WITH SECTION 723 OF THE STANDARD SPECIFICATIONS FOR HIGHWAY CONSTRUCTION.

ALL SIGN BLANKS SHALL BE CONSTRUCTED OF ALUMINUM ALLOY (ASTM DESIGNATION B-209, ALLOY 5052-H38) WITH THICKNESS OF 0.100 INCH.

GENERAL NOTES:
1. MAST ARM POLES SHALL BE MOUNTED A MINIMUM OF FOUR (4') FEET BEHIND CURB OR SHOULDER.

2. OCTAGONAL POLES AND ARMS MEETING THE REQUIREMENTS OF THE PLANS SPECIFICATIONS CAN BE INSTALLED IN LIEU OF ROUND. ALL POLES AND ARMS IN A JOB MUST BE THE SAME SHAPE.

3. MINIMUM STRUCTURAL REQUIREMENTS:
DESIGN SPECIFICATIONS: AASHTO STANDARD SPECIFICATIONS FOR STRUCTURAL SUPPORTS FOR HIGHWAY SIGNS, LUMINAIRES AND TRAFFIC SIGNALS, 4TH EDITION (2001) WITH 2003 AND 2006 INTERIMS.

USE FATIGUE CATEGORY I FOR ALL STRUCTURES ON ROUTES WHERE THE SPEED LIMIT IS 65 MPH AND GREATER AT THE STRUCTURE LOCATION AND ON ROUTES WHERE THE SPEED LIMIT IS GREATER THAN 45 MPH WITH AN MAST ARM OF 60' OR LONGER.

USE FATIGUE CATEGORY II FOR ALL STRUCTURES ON ROUTES WHERE THE SPEED LIMIT IS LESS THAN 65 MPH AND GREATER THAN 45 MPH WITH MAST ARMS LESS THAN 60' AND ON ROUTES WHERE THE SPEED LIMITS OF 45 MPH AND LESS WITH AN MAST ARM OF 60' OR LONGER.

USE FATIGUE CATEGORY III FOR ALL STRUCTURES WHERE THE SPEED LIMIT IS 45 MPH AND LESS AND MAST ARMS LESS THAN 60'.

CONSTRUCTION SPECIFICATIONS:
STANDARD SPECIFICATIONS FOR HIGHWAY CONSTRUCTION (CURRENT EDITION) WITH APPLICABLE SUPPLEMENTAL SPECIFICATIONS AND SPECIAL PROVISIONS.

BASE WIND SPEED: 90 MPH.

STEEL MEMBERS CONSIDERED MAIN LOAD CARRYING MEMBERS WITH A THICKNESS GREATER THAN 1/2" SHALL MEET THE LONGITUDINAL CHARPY V-NOTCH TEST SPECIFIED IN SUBSECTION 807.05 OF THE STANDARD SPECIFICATIONS.

DEAD LOAD: AS A MINIMUM, DESIGN SHALL BE BASED ON THE FIXED ATTACHMENTS SHOWN BELOW OR AS MODIFIED IN THE PLANS.

ALL SIGNAL HEADS TO BE ONE WAY, TWELVE (12") INCH AND HAVE FIVE (5") INCH BACK PLATES:

SIGNAL HEADS AT THE END OF MAST ARM - ONE 4 SEC., 85 LB., 14.5 SQ. FT., ONE SIGN MOUNTED 3 FEET FROM SIGNAL HEAD (2'-0" X 2'-6"; 20 LB.) REMAINING SIGNAL HEADS SPACED AT 8 FT. (3 SEC., 56 LB., 8.3 SQ. FT.):
DESIGN TO ACCOMMODATE:
2 SIGNAL HEADS FOR MAST ARMS 10 FT. TO 16 FT.
3 SIGNAL HEADS FOR MAST ARMS 18 FT. TO 24 FT.
4 SIGNAL HEADS FOR MAST ARMS OVER 26 FT.

STREET NAME SIGN - 72" X 18", 36 LB., MOUNTED SUCH THAT OUTSIDE EDGE IS NOT GREATER THAT 12 FT. FROM POLE. DEPENDING UPON POSITION OF SIGNAL HEAD ADJACENT TO POLE, SIGN MAY OVERLAP POLE SHAFT.
ROADWAY LUMINAIRES (WHERE REQUIRED ON PLAN SHEET) - VARIABLE ARM LENGTH (MAX. WT. 75 LB., 3.3 SQ. FT.)
PEDESTRIAN SIGNALS - TWO 1 SEC., 12 INCH MOUNTED 8 FT. FROM BASE OF POLE. POST MOUNTED 3 SEC. SIGNAL HEAD AT 10 FT. ON SIDE OF POLE.

4. POLE/MAST ARM CAP - POLE AND MAST ARM CAPS SHALL BE PROVIDED, FABRICATED OF EITHER STEEL OR CAST ALUMINUM.

5. HAND HOLE - HAND HOLES SHALL BE 4 IN. X 6 IN. FOR STANDARD, AND 3 IN. X 5 IN. FOR PED POLES. MINIMUM PLACED APPROXIMATELY 12 INCHES FROM BASE, AND SHALL BE FIXED WITH A BOLT DOWN COVER. A VACCUM FORMED ABS COVER IS AN ACCEPTABLE ALTERNATE TO STEEL. POLES GREATER THAN 21FT. IN HEIGHT (FOR ROADWAY LUMINAIRE ATTACHMENT) SHALL INCLUDED A HAND HOLE WITHIN 12 INCHES OF MAST ARM(S) ATTACHMENT(S).

6. POLE/MAST ARM TAPER SLOPE - AVERAGE TAPER OF SIGNAL MAST ARMS AND POLE SHAFT SHALL BE 0.125 TO 0.15 INCHES PER FOOT.

MAST ARM CENTERLINE ANGLE AT ATTACHMENT POINT WITH POLE SHALL MAINTAIN NOT LESS THAN 0.5 DEGREES OR MORE THAN 4 DEGREES POSITIVE SLOPE WITH A LINE PERPENDICULAR TO THE POLE CENTERLINE. THE MAST ARM SHALL MAINTAIN A POSITIVE SLOPE AFTER IT IS PLACED UNDER LOAD.

7. NUT COVERS - EACH POLE SHALL INCLUDE A BOLT DOWN NUT COVER FOR EACH ANCHOR BOLT.

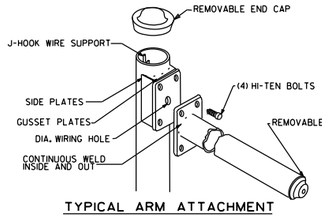

TYPICAL ARM ATTACHMENT

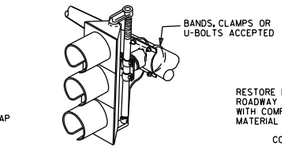

NOTE: THE SIGNAL SHALL BE CONNECTED TO THE MAST ARM BY BRACKETING AS DIRECTED BY THE ENGINEER.

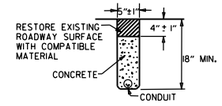

TRENCHING DETAIL
(FOR SAW CUT TRENCH IN ROADWAY)

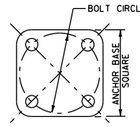

ANCHOR BASE

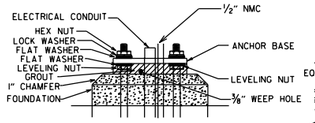

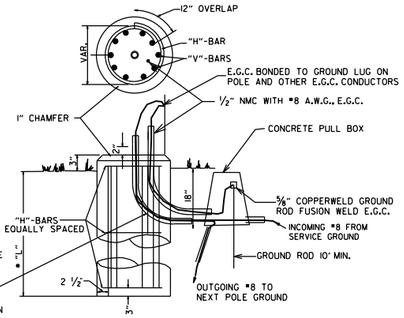

THE SWEEPING "L" IN THE FOUNDATION SHALL BE THE SAME SIZE AS THE CONDUIT FROM THE FOUNDATION TO THE PULL BOX AS SHOWN ON THE PLANS.

THE GROUND ROD SHALL BE FUSION WELDED TO A 10'/#8 A.W.G. SOLID COPPER GROUND WIRE. ATTACHMENT TO THE PRIMARY GROUND MAY BE BY AN APPROVED CLAMP. THE GROUND ROD IS TO BE LOCATED IN THE CONCRETE PULL BOX.

TYPICAL FOUNDATION DETAILS

POLE FOUNDATION MINIMUM DIMENSIONS AND STEEL REINFORCING. ALL REINFORCING STEEL SHALL BE GRADE 40 MIN.

ARM LENGTH	FOUNDATION DIAMETER	DEPTH "L"*	STEEL VERTICAL	STEEL HORIZONTAL	STEEL O.C.
PED	30"	7'-0"	12-#7 (6'-6")	10-#4	8.44"
2' TO 12'	30"	10'-6"	12-#7 (10'-0")	15-#4	8.42"
OVER 12' TO 20'	30"	11'-6"	12-#7 (11'-0")	16-#4	8.66"
OVER 20' TO 35'	36"	12'-6"	13-#8 (12'-0")	17-#4	8.88"
OVER 35' TO 50'	36"	13'-6"	13-#8 (13'-0")	19-#4	8.56"
OVER 50' TO 72'	42"	14'-6"	18-#8 (14'-0")	20-#4	8.74"
TWINS TO 20'	30"	16'-0"	12-#6 (15'-6")	22-#4	8.76"
TWINS OVER 20' TO 44'	36"	16'-0"	13-#8 (15'-6")	22-#4	8.76"
TWINS OVER 44' TO 50'	42"	16'-0"	18-#8 (15'-6")	22-#4	8.76"
TWINS OVER 50' TO 72'	42"	16'-6"	18-#8 (16'-0")	23-#4	8.64"

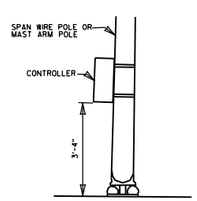

SPAN WIRE SUPPORT POLE AND MAST ARM POLE MOUNTED

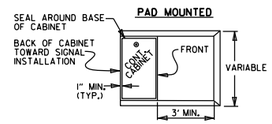

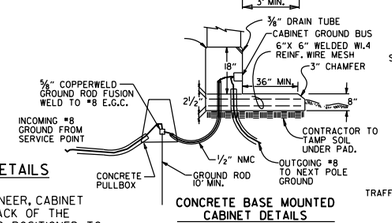

CONCRETE BASE MOUNTED CABINET DETAILS

CONTROLLER CABINET MOUNTING DETAILS

NOTE:
UNLESS OTHERWISE DIRECTED BY THE ENGINEER, CABINET ORIENTATION SHALL BE SUCH THAT THE BACK OF THE CABINET IS PARALLEL TO THE STREET AND POSITIONED TO ALLOW VISIBILITY OF THE SIGNAL DISPLAY WHILE OBSERVING THE CONTROLLER FRONT PANEL.

8. GROUND ROD - A 10' X 5/8" GROUND ROD SHALL BE INSTALLED IN THE CONCRETE PULL BOX FOR EACH POLE AND THE CONTROLLER. PAYMENT FOR THE GROUND ROD AND 1/2" NMC SHALL BE INCLUDED IN ITEM 714 FOR SIGNAL POLES AND ITEM 701FOR THE CONTROLLER. THE CONCRETE PULL BOX AND CONDUCTOR BOX SHALL BE PAID SEPERATELY.

9. POLE BASE/FOUNDATION - ANCHOR BOLTS SHALL INCLUDE AS A MINIMUM, ONE LEVELING NUT, TWO FLAT WASHERS, ONE LOCK WASHER, AND ONE HEX NUT. PERIMETER OF ANCHOR BASE SHALL BE GROUTED WITH A 1/4" WEEP HOLE. ALL CONCRETE SHALL BE CLASS "S" OR GREATER.

10. CONCRETE - ALL CONCRETE FOR CONTROLLER CABINET AND POLE FOUNDATIONS SHALL BE CLASS "S" OR GREATER.

11. PEDESTRIAN PHASES - PEDESTRIAN MOVEMENTS SHALL BE PUSH BUTTON ACTUATED AND CONCURRENTLY TIMED, UNLESS OTHERWISE INDICATED ON THE PLAN SHEET(S). FURNISHING AND INSTALLING PEDESTRIAN PUSH SWITCH SHALL BE CONSIDERED SUBSIDIARY TO THE ITEM 707 PEDESTRIAN SIGNAL HEAD.

* WHEN THE GROUND ELEVATION AT THE POLE IS LOWER THAN THE ROADWAY ELEVATION, THE LENGTH OF FOUNDATION ABOVE THE GROUND MAY BE INCREASED TO PROVIDE THE REQUIRED SIGNAL HEAD CLEARANCE ABOVE THE ROADWAY. WHEN THE REQUIRED LENGTH OF FOUNDATION ABOVE THE GROUND IS 18" OR LESS, NO INCREASE IN DEPTH "L" WILL BE REQUIRED. WHEN THE REQUIRED LENGTH OF FOUNDATION ABOVE THE GROUND IS 5'-6" OR LESS, INCREASE DEPTH "L" BY 1'-0". FOR LENGTHS GREATER THAN 5'-6", DEPTH "L" SHALL BE ADJUSTED AS DIRECTED BY THE ENGINEER. LONGITUDINAL REINFORCING, AS SHOWN IN THE TABLE, SHALL BE PROVIDED FOR THE LENGTH OF THE EXTENDED SHAFT AND #4 TIES SHALL BE PROVIDED AT A SPACING NOT TO EXCEED 9" ON CENTERS. PAYMENT WILL BE IN ACCORDANCE WITH SECTION 714 TRAFFIC SIGNAL MAST ARM AND POLE WITH FOUNDATION OF THE STANDARD SPECIFICATIONS.

** IN LIEU OF DESIGNING THE STRUCTURE TO RESIST PERIODIC GALLOPING, A VIBRATORY MITIGATION DEVICE MAY BE PROVIDED BY THE POLE MANIFACTURER. THE VIBRATORY MITIGATION DEVICE SHALL BE AN ANTI-GALLOPING PANEL CONSISTING OF A 60" X 16" X 0.125" SIGN BLANK MOUNTED NEAR THE END OF THE MAST ARM NOT TO EXCEED ONE QUARTER OF THE LENGTH OF THE MAST ARM FROM THE END OF THE MAST ARM WITH THE LONG AXIS OF THE PANEL COLLINEAR WITH THE LONG AXIS OF THE MAST ARM. THE PANEL SHOULD BE MOUNTED AT SUCH THE HEIGHT AS TO PROVIDE AT LEAST 6" CLEAR FROM THE TOP OF ANY SIGNAL ASSEMBLY OF SIGN PANEL LOCATED ON THE MAST ARM WITHIN THE LENGTH OF THE ANTI-GALLOPING PANEL.

TRUCK-INDUCED GUST LOADS SHALL BE EXCLUDED FOR FATIGUE DESIGN FOR ALL STRUCTURES EXCEPT MAST ARMS MOUNTED OVER FACILITIES WITH POSTED SPEEDS OF 65 MPH OR GREATER AT THE LOCATION OF THE STRUCTURE.

SIGNAL OPERATION NOTES:

FLASHING OPERATION - PRIOR TO NORMAL OPERATION, SIGNAL SHALL BE FLASHED FOR A PERIOD OF 3 TO 5 WORK DAYS OR AS DIRECTED BY THE ENGINEER. SIGNAL SHALL BE PLACED IN OPERATION ONLY ON A REGULAR WORK DAY, EXCEPT FRIDAY.

THE CONTRACTOR MAY BE REQUIRED TO ALTER THE FLASHING DISPLAY DURING THE TEMPORARY FLASH PERIOD. AT THE TIME THE INTERSECTION IS PLACED IN PERMANENT OPERATION, THE FLASH SEQUENCE SHALL THEN BE RETURNED TO THAT INDICATED ON THE PLAN SHEETS. NO ADDITIONAL COMPENSATION SHALL BE ALLOWED FOR THESE ALTERATIONS IN FLASH SEQUENCE.

SPECIAL NOTE: 90 MPH WIND ZONE DESIGN, SEE NOTE 3. MINIMUM STRUCTURAL REQUIREMENTS.

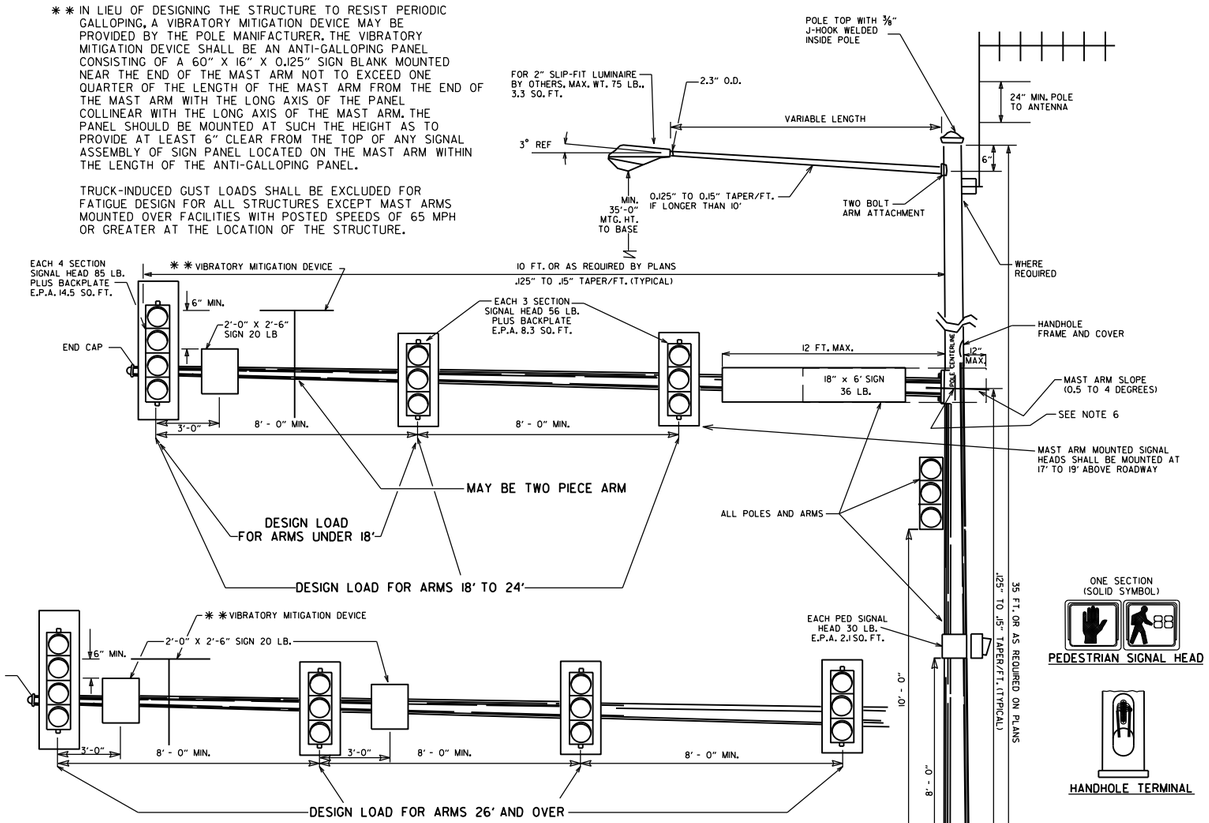

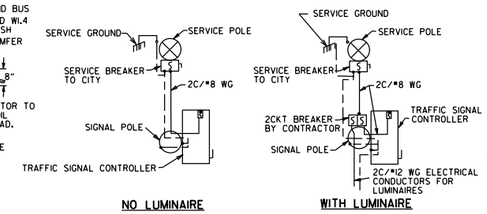

NO LUMINAIRE — WITH LUMINAIRE

SERVICE DISCONNECT

NOTE: ELECTRICAL GROUND CONDUCTOR IS BONDED TO ALL METAL ENCLOSURES

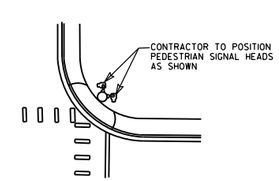

PEDESTRIAN SIGNAL HEADS

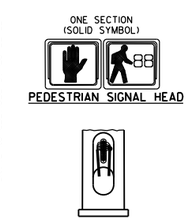

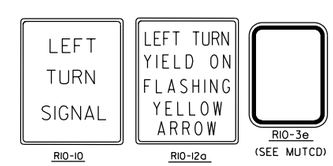

DATE	REVISION	FILMED
02-13-24	REVISED SPECIAL SIGN TO R10-12a SIGN	
11-16-17	REVISED NOTES, ADDED PEDESTRIAN SIGNAL HEAD DETAIL, ADDED HANDHOLE TERMINAL DETAIL, ADDED TRENCHING DETAIL	
02-27-14	REVISED NOTES.	
09-12-13	ISSUED AS STANDARD DRAWING	
12-08-16	REVISED NOTES	
02-27-14	REVISED NOTES	
09-12-13	ISSUED AS STANDARD DRAWING	
07-21-11	REVISED VMD, SIGNAL HEADS	
05-21-09	REVISED GROUNDING	
07-31-08	REVISED GROUNDING	
04-25-08	ADDED VIBRATORY MITIGATION DEVICE & NOTES	
04-18-08	REVISED AASHTO NOTES	
04-17-08	REVISED TO 2001 AASHTO STANDARDS	
10-12-04	REVISED CABINET ORIENTATION	
06-23-04	REVISED	
05-11-04	REV. NOTE 3/AASHTO REQUIREMENTS	
06-11-01	REV. NOTES & POLE MAST ARM SLOPE	
04-11-01	REVISED POLE TAPERS	
04-25-00	REV. NOTES & SIGNAL HEAD PLACEMENT	
11-22-99	REVISED FOUNDATION DETAILS	
11-17-98	REVISED DETAILS AND NOTES	
11-21-95	ISSUED	

ARKANSAS STATE HIGHWAY COMMISSION

STEEL POLE WITH MAST ARM

STANDARD DRAWING SD-11

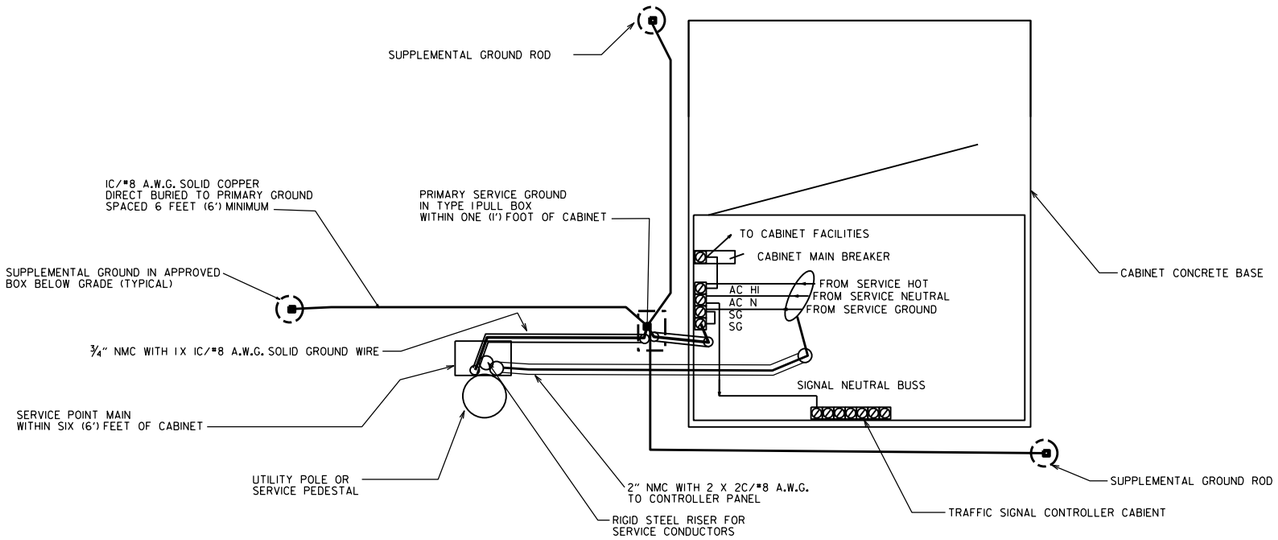

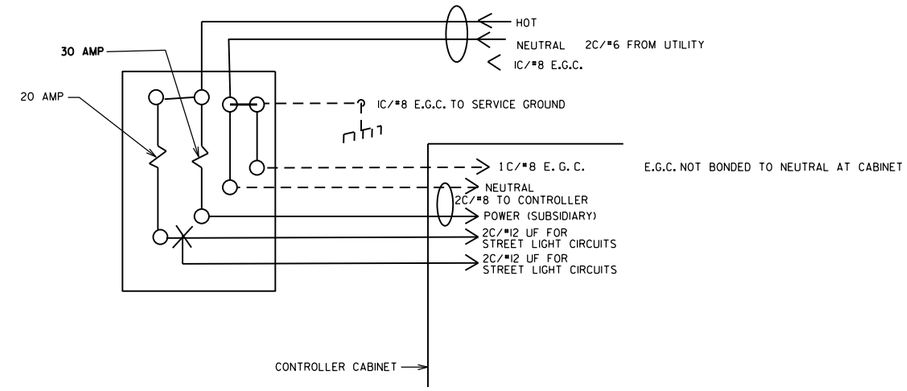

MAIN BREAKER WIRING (TYPICAL)

SERVICE GROUND IS TYPICALLY TIED TO NEUTRAL AT THE MAIN BREAKER. AS SUCH, CONTROLLER GROUND IS NOT TIED TO NEUTRAL AT SECONDARY BREAKER OR IN CONTROLLER CABINET.

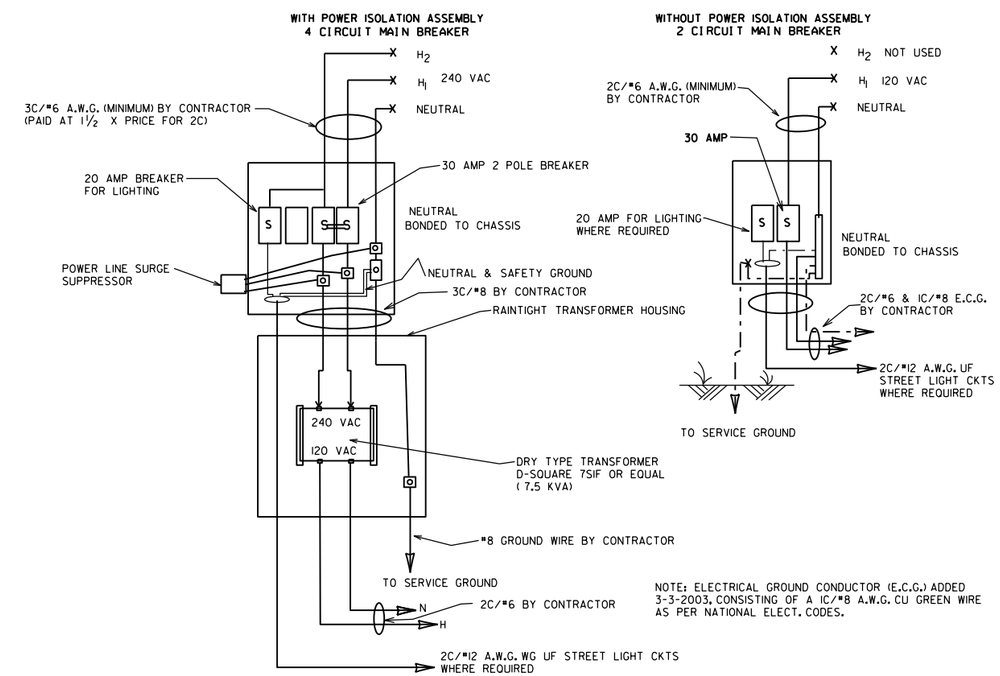

NOTE: ELECTRICAL GROUND CONDUCTOR (E.C.G.) ADDED 3-3-2003, CONSISTING OF A 1C/#8 A.W.G. CU GREEN WIRE AS PER NATIONAL ELECT. CODES.

NOTES:

LOCATION OF SERVICE:
TO MEET THE REQUIREMENTS FOR SAFETY AND MAXIMIZE LIGHTNING PROTECTION. THE "SERVICE POINT MAIN" FROM THE UTILITY PRIMARY SERVICE POINT MUST BE WITHIN SIX (6') FEET OF THE TRAFFIC SIGNAL CONTROLLER CABINET. ELECTRICAL SERVICE SHALL BE PROVIDED BY THE CITY/COUNTY TO A SERVICE POLE OR PEDESTAL WITH EXTERNAL RAINTIGHT BREAKER (MAIN BREAKER) AT A MUTUALLY ACCEPTABLE POINT WITHIN THE RIGHT-OF-WAY. SERVICE POINT INCLUDES GALVANIZED STEEL CONDUIT TO A POLE 18" BELOW GROUND LINE, TWO CIRCUIT MAIN BREAKER, POWER ISOLATION ASSEMBLY WHERE REQUIRED, METER LOOP IF REQUIRED BY LOCAL UTILITY COMPANY, ELECTRICAL CONDUCTORS AND WEATHERHEAD. WHERE STREET LIGHTING IS INCLUDED AS PART OF SIGNAL INSTALLATION, STREET LIGHTING CIRCUIT (2C/#12 A.W.G. UF RATED, TYPICAL) SHALL BE KEPT SEPARATE FROM THE CIRCUIT SERVING TRAFFIC SIGNAL. SERVICE WIRE AND WIRING FROM THE CONTROLLER TO MAIN BREAKER IS PROVIDED BY THE CONTRACTOR AS A PART OF THIS CONTRACT. WIRE AND WIRING FROM MAIN RESPONSIBILITY OF THE CITY/COUNTY.

METER LOOP:
ALL COMPONENTS OF THE SERVICE POINT WITH THE EXCEPTION OF THE WIRE AND WIRING ABOVE THE MAIN BREAKER IS FURNISHED AND INSTALLED BY THE CONTRACTOR. WIRING FROM MAIN BREAKER INCLUDING CONNECTION TO THE UTILITY, IS THE RESPONSIBILITY OF THE CITY/COUNTY. IF METER LOOP IS REQUIRED, METER BASE AND HARDWARE IS PROVIDED BY THE CITY/COUNTY AND ISTALLED BY THE CONTRACTOR.

SUPPLEMENT GROUND RODS:
SUPPLEMENT GROUND RODS ARE FUSION WELDED TO 1C/#8 A.W.G. SOLID COPPER GROUND WIRE. ATTACHMENT TO PRIMARY GROUND MAY BE AN APPROVED CLAMP. GROUND RODS ARE LOCATED IN A BOX APPROVED BY THE ENGINEER MEETING THE SAME LOADING REQUIREMENTS AS SECTION 711 CONCRETE PULL BOX OF THE STANDARD SPECIFICATIONS, WITH THE EXCEPTION TO DIMENSIONS. THE CONCRETE PULL BOX MAY BE EITHER ROUND OR SQUARE APPROXIMATELY SIX (6") INCHES MINIMUM INSIDE DIMENSIONS AND SIX (6") INCHES DEPTH. (STRONGWELL PC0608BA06 WITH PC0608CA00 LID OR EQUAL).

DATE	REVISION	FILMED
11-07-19	REVISED NOTES	
11-16-17	REVISED NOTES	
09-12-13	ISSUED AS STANDARD DRAWING	
01-17-08	ISSUED	

ARKANSAS STATE HIGHWAY COMMISSION

SERVICE POINT INSTALLATION WITH SUPPLEMENT GROUNDING ARRAY

STANDARD DRAWING SD-12

DETAIL OF SIGN SUPPORT ASSEMBLY

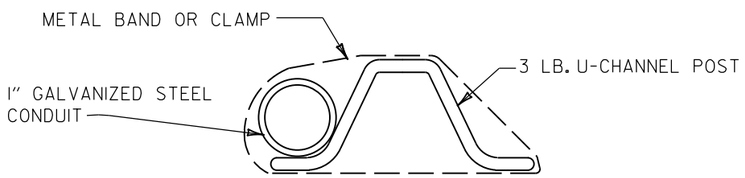

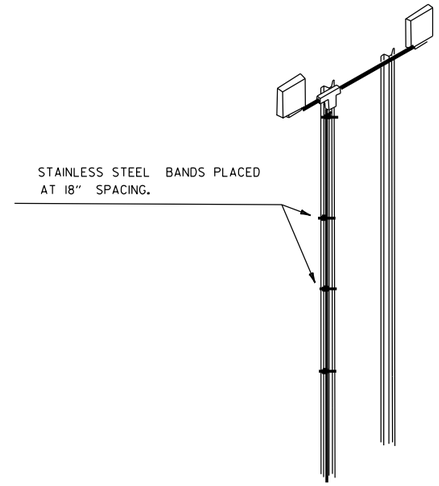

WIRING DIAGRAM

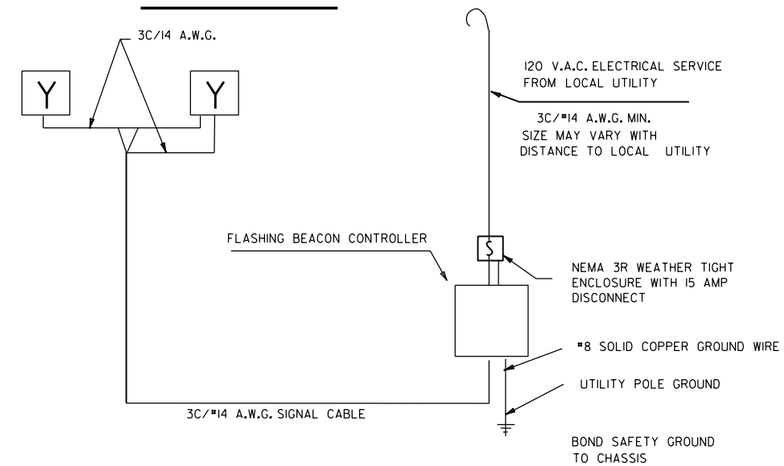

TYPICAL INSTALLATION

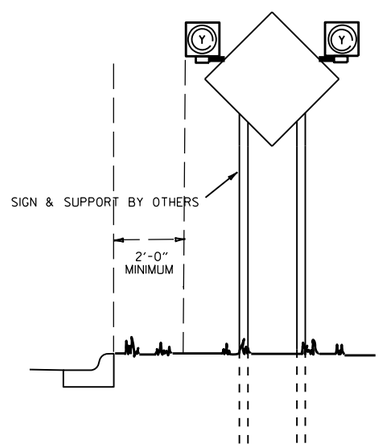

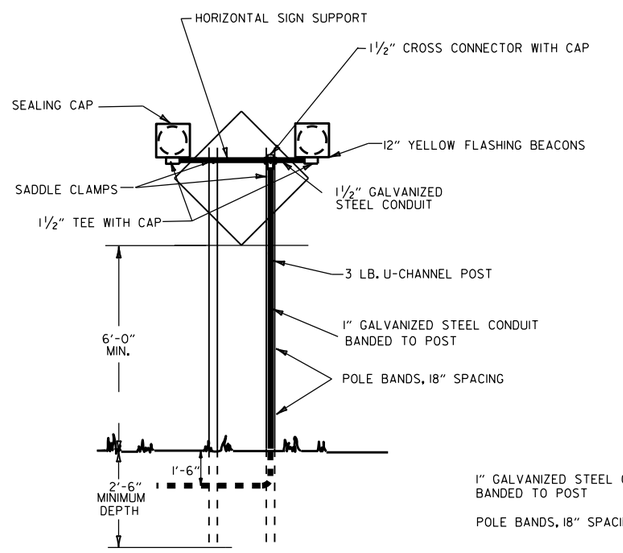

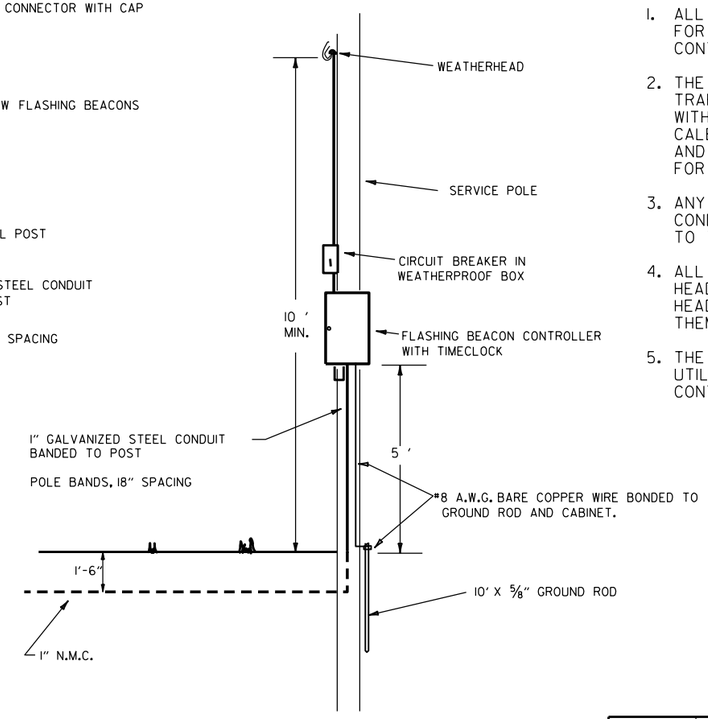

NOTES:

1. ALL CONSTRUCTION SHALL CONFORM TO THE STANDARD SPECIFICATIONS FOR HIGHWAY CONSTRUCTION (CURRENT EDITION), DIVISION 700, TRAFFIC CONTROL FACILITIES.
2. THE FLASHING BEACON ASSEMBLY SHALL INCLUDE LIGHTING SUPPRESSORS, TRAFFIC SIGNAL CABLE, TWO 12" TRAFFIC SIGNAL HEADS (1 SEC., 1 WAY) WITH YELLOW LENSES, FLASHING BEACON CONTROLLER AND A SOLID STATE CALENDAR DATE TIME CLOCK WITH DAYLIGHT SAVINGS TIME PROGRAMMING AND 48 HOUR POWER FAIL PROTECTION, DATE TIME CLOCK REQUIRED ONLY FOR SCHOOL ZONES. SIGNAL HEADS SHALL BE WIRED TO FLASH ALTERNATELY.
3. ANY FITTINGS, BANDS, GROUND ROD OR ACCESSORIES NECESSARY TO MOUNT CONDUIT AND FLASHING BEACON CONTROLLER SHALL BE CONSIDERED SUBSIDIARY TO THE ITEM FOR FLASHING BEACON CONTROLLER.
4. ALL COUPLINGS, TEES, CLAMPS AND HARDWARE NECESSARY TO MOUNT SIGNAL HEADS SHALL BE CONSIDERED SUBSIDIARY TO THE ITEM FOR TRAFFIC SIGNAL HEAD (1 SEC., 1 WAY). THE CONTRACTOR SHALL REMOVE SIGNS AND RE-INSTALL THEM AFTER FLASHING BEACONS ARE INSTALLED.
5. THE CITY/COUNTY SHALL BE RESPONSIBLE FOR PROVIDING, THROUGH A LOCAL UTILITY COMPANY A SERVICE POINT AND POWER TO THE FLASHING BEACON CONTROLLER. THIS NOTE APPLIES ONLY WHEN USED AT A SCHOOL LOCATION.

DATE	REVISION	FILMED
11-16-17	REVISED NOTES	
09-02-15	MINOR REVISION TO TYPICAL INSTALLATION DRAWING.	
02-27-14	REVISED NOTE 1.	
09-12-13	ISSUED AS STANDARD DRAWING	
04-17-08	MINOR REVISIONS	
11-03-97	ISSUED	

ARKANSAS STATE HIGHWAY COMMISSION

FLASHING BEACON INSTALLATION FOR HAZARDOUS CONDITIONS

STANDARD DRAWING SD-13

DETAIL OF SIGN SUPPORT ASSEMBLY

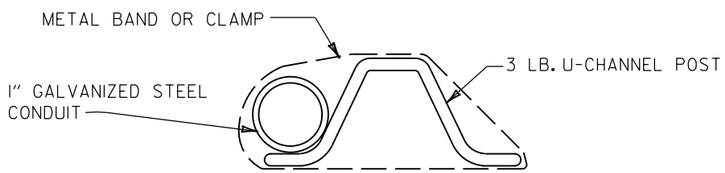

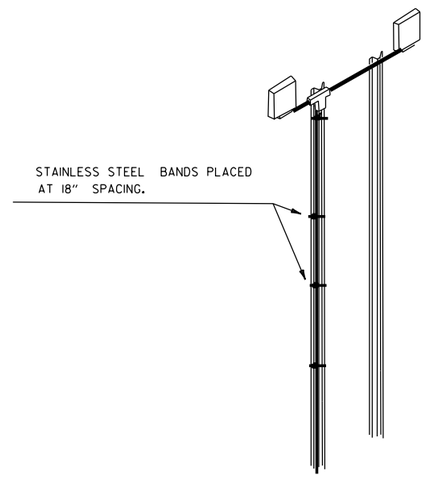

WIRING DIAGRAM

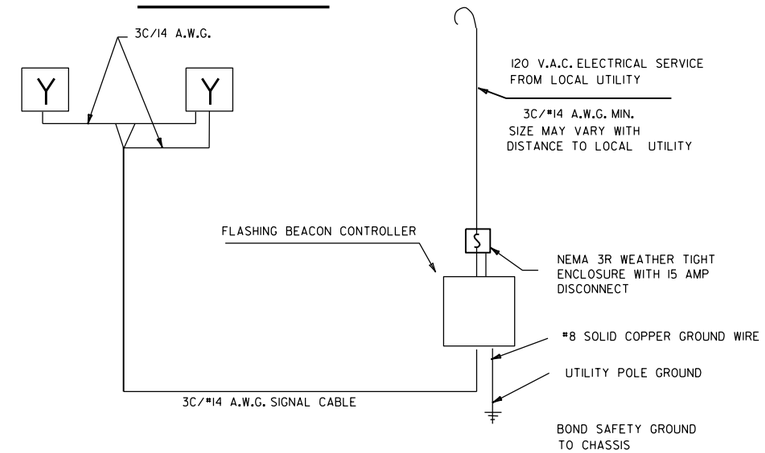

TYPICAL INSTALLATION

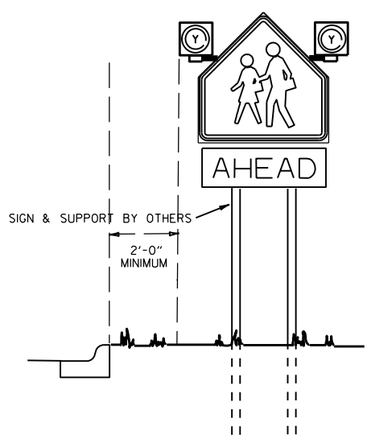

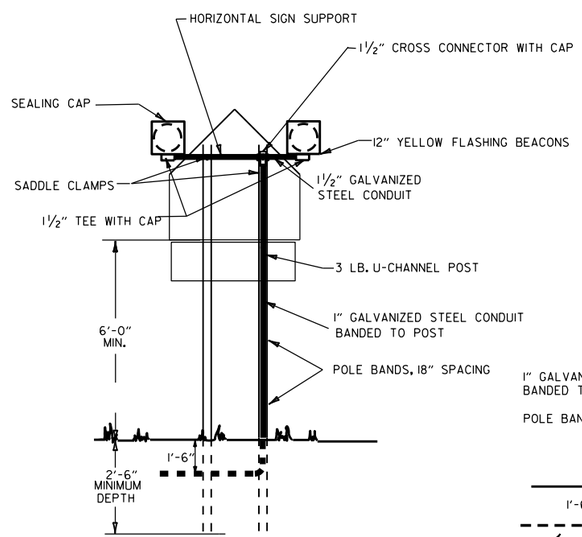

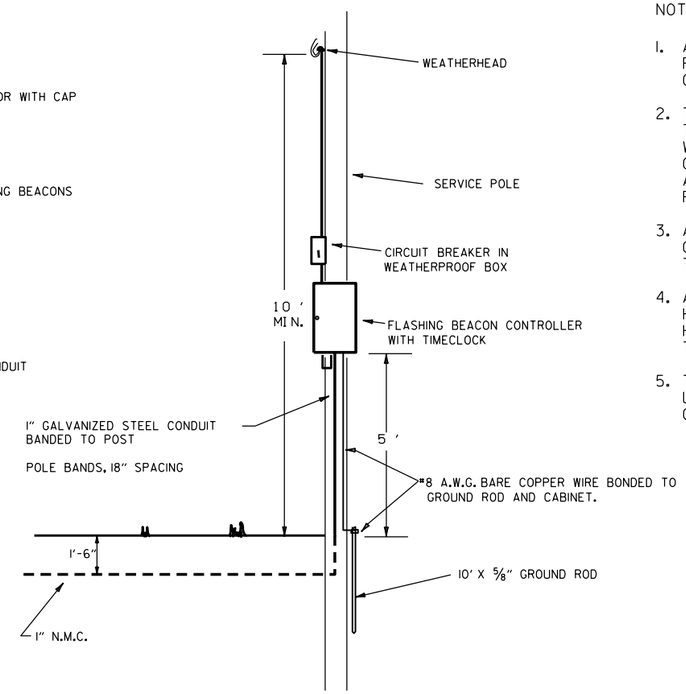

NOTES:

1. ALL CONSTRUCTION SHALL CONFORM TO THE STANDARD SPECIFICATIONS FOR HIGHWAY CONSTRUCTION (CURRENT EDITION), DIVISION 700, TRAFFIC CONTROL FACILITIES.
2. THE FLASHING BEACON ASSEMBLY SHALL INCLUDE LIGHTING SUPPRESSORS, TRAFFIC SIGNAL CABLE, TWO 12" TRAFFIC SIGNAL HEADS (1 SEC., 1 WAY) WITH YELLOW LENSES, FLASHING BEACON CONTROLLER AND A SOLID STATE CALENDAR DATE TIME CLOCK WITH DAYLIGHT SAVINGS TIME PROGRAMMING AND 48 HOUR POWER FAIL PROTECTION, DATE TIME CLOCK REQUIRED ONLY FOR SCHOOL ZONES. SIGNAL HEADS SHALL BE WIRED TO FLASH ALTERNATELY.
3. ANY FITTINGS, BANDS, GROUND ROD OR ACCESSORIES NECESSARY TO MOUNT CONDUIT AND FLASHING BEACON CONTROLLER SHALL BE CONSIDERED SUBSIDIARY TO THE ITEM FOR FLASHING BEACON CONTROLLER.
4. ALL COUPLINGS, TEES, CLAMPS AND HARDWARE NECESSARY TO MOUNT SIGNAL HEADS SHALL BE CONSIDERED SUBSIDIARY TO THE ITEM FOR TRAFFIC SIGNAL HEAD (1 SEC., 1 WAY). THE CONTRACTOR SHALL REMOVE SIGNS AND RE-INSTALL THEM AFTER FLASHING BEACONS ARE INSTALLED.
5. THE CITY/COUNTY SHALL BE RESPONSIBLE FOR PROVIDING, THROUGH A LOCAL UTILITY COMPANY A SERVICE POINT AND POWER TO THE FLASHING BEACON CONTROLLER. THIS NOTE APPLIES ONLY WHEN USED AT A SCHOOL LOCATION.

DATE	REVISION	FILMED
11-16-17	REVISED NOTES	
02-27-04	REVISED NOTE 1.	
09-12-13	ISSUED AS STANDARD DRAWING	
04-17-08	MINOR REVISIONS	
11-03-97	ISSUED	

ARKANSAS STATE HIGHWAY COMMISSION

FLASHING BEACON INSTALLATION FOR HAZARDOUS CONDITIONS AND SCHOOL ZONES

STANDARD DRAWING SD-14

DETAIL OF SIGN SUPPORT ASSEMBLY

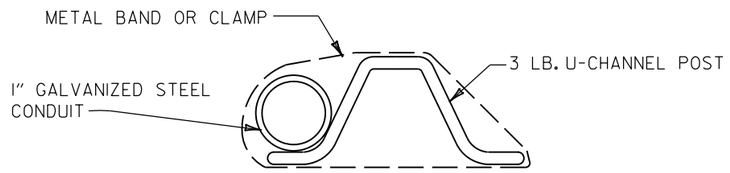

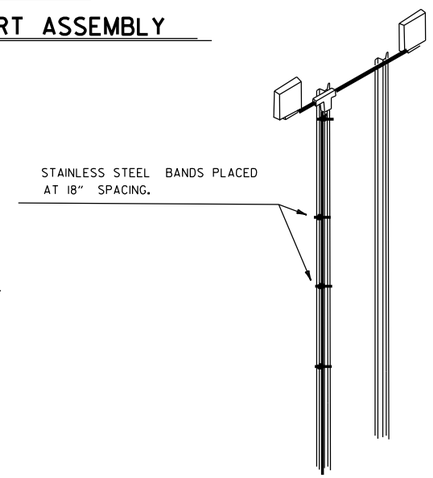

WIRING DIAGRAM

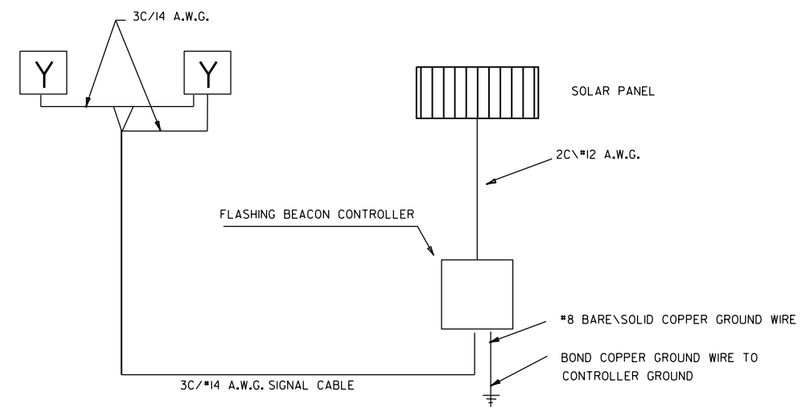

TYPICAL INSTALLATION

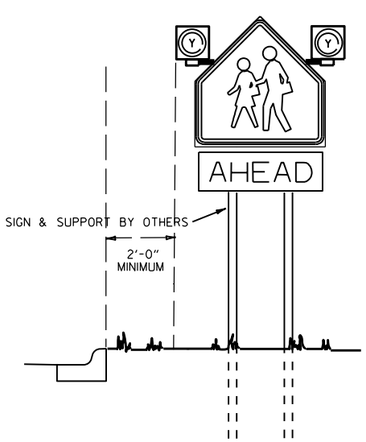

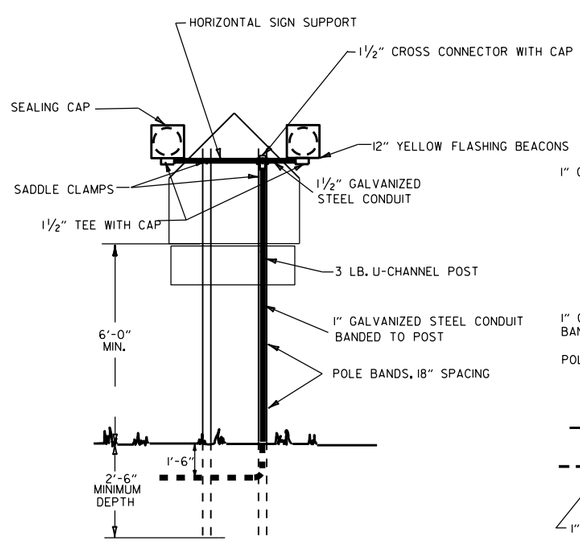

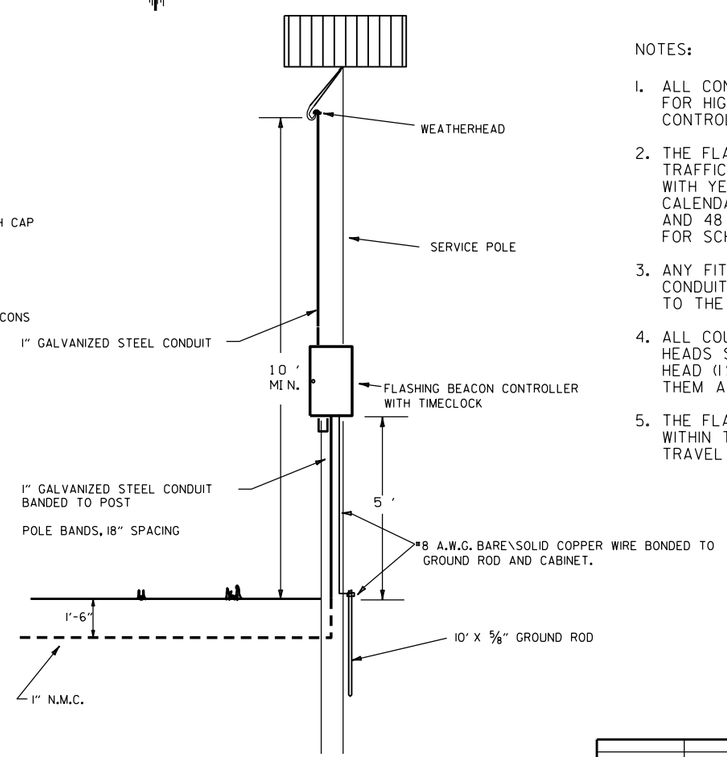

NOTES:

1. ALL CONSTRUCTION SHALL CONFORM TO THE STANDARD SPECIFICATIONS FOR HIGHWAY CONSTRUCTION (CURRENT EDITION), DIVISION 700, TRAFFIC CONTROL FACILITIES.
2. THE FLASHING BEACON ASSEMBLY SHALL INCLUDE LIGHTING SUPPRESSORS, TRAFFIC SIGNAL CABLE, TWO 12" TRAFFIC SIGNAL HEADS (1 SEC., 1 WAY) WITH YELLOW LENSES, FLASHING BEACON CONTROLLER AND A SOLID STATE CALENDAR DATE TIME CLOCK WITH DAYLIGHT SAVINGS TIME PROGRAMMING AND 48 HOUR POWER FAIL PROTECTION, DATE TIME CLOCK REQUIRED ONLY FOR SCHOOL ZONES. SIGNAL HEADS SHALL BE WIRED TO FLASH ALTERNATELY.
3. ANY FITTINGS, BANDS, GROUND ROD OR ACCESSORIES NECESSARY TO MOUNT CONDUIT AND FLASHING BEACON CONTROLLER SHALL BE CONSIDERED SUBSIDIARY TO THE ITEM FOR FLASHING BEACON CONTROLLER.
4. ALL COUPLINGS, TEES, CLAMPS AND HARDWARE NECESSARY TO MOUNT SIGNAL HEADS SHALL BE CONSIDERED SUBSIDIARY TO THE ITEM FOR TRAFFIC SIGNAL HEAD (1 SEC., 1 WAY). THE CONTRACTOR SHALL REMOVE SIGNS AND RE-INSTALL THEM AFTER FLASHING BEACONS ARE INSTALLED.
5. THE FLASHING BEACON CONTROLLER AND SOLAR PANEL SHOULD BE LOCATED WITHIN THE HIGHWAY RIGHT-OF-WAY BUT AS FAR AWAY FROM THE VEHICLE TRAVEL WAY AS POSSIBLE TO AVOID VEHICLE IMPACTS.

DATE	REVISION	FILMED
11-16-17	REVISED NOTES	
02-27-04	REVISED NOTE 1.	
09-12-13	ISSUED AS STANDARD DRAWING	
04-17-08	MINOR REVISIONS	
08-19-03	ISSUED	

ARKANSAS STATE HIGHWAY COMMISSION

SOLAR POWERED FLASHING BEACON INSTALLATION FOR SCHOOL ZONE SIGNING

STANDARD DRAWING SD-15

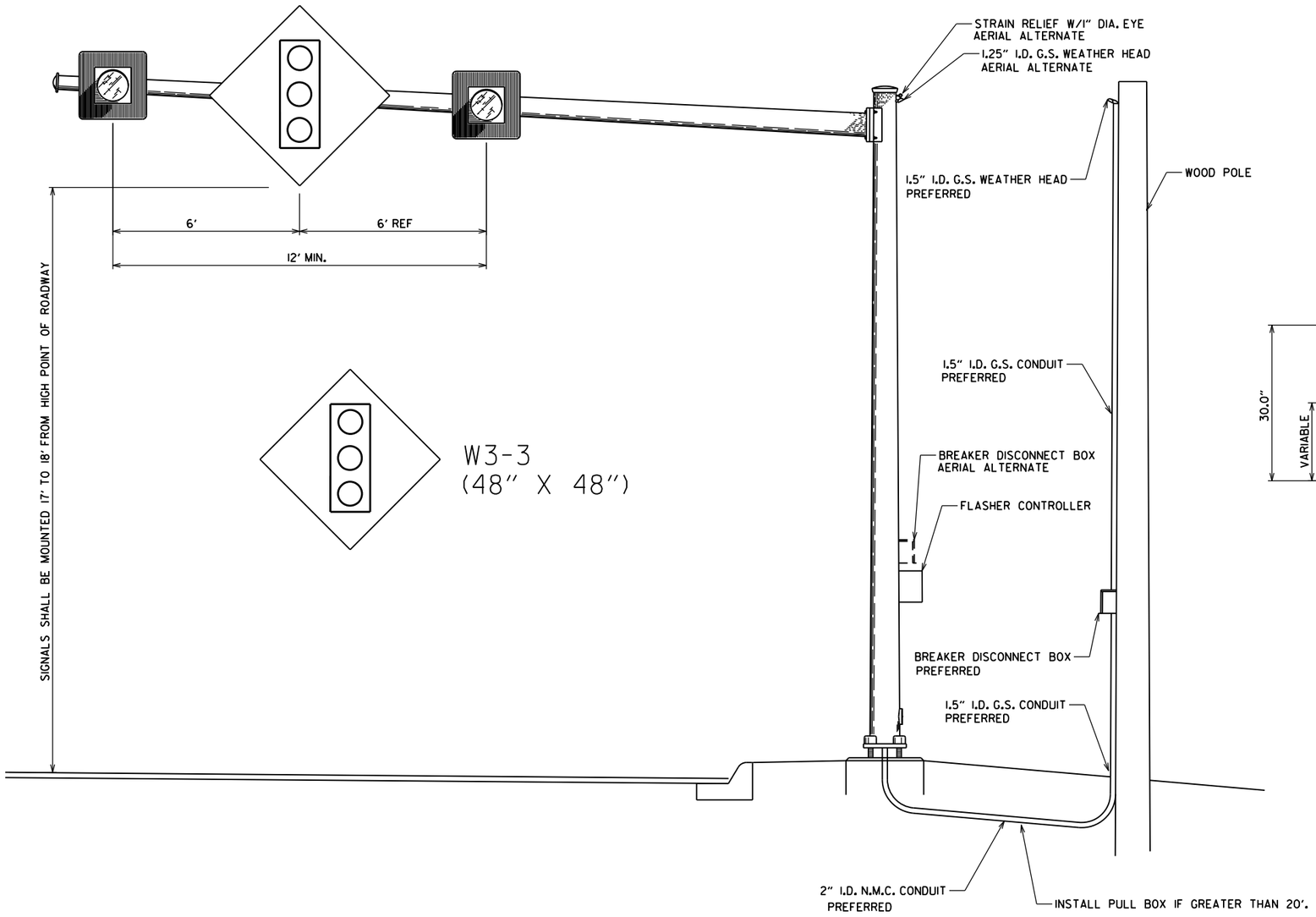

OVERHEAD SIGN MOUNTING DETAILS

N.T.S.

NOTES

1. THE SIGN MOUNTING BRACKET SHALL BE SUBSIDIARY TO THE PAY ITEM - TRAFFIC SIGNAL MAST ARM AND POLE WITH FOUNDATION.
2. MAST ARM, POLE, HARDWARE, AND MOUNTING BRACKET SHALL BE GALVANIZED IN ACCORDANCE WITH SECTION 714.
3. A COMMERCIALLY MANUFACTURED MOUNTING PLATE OR BRACKET MAY BE SUBMITTED FOR APPROVAL IN LIEU OF THE MOUNTING PLATE SHOWN.
4. EACH SIGNAL HEAD SHALL HAVE A SEPARATE 5 CONDUCTOR SIGNAL CABLE.

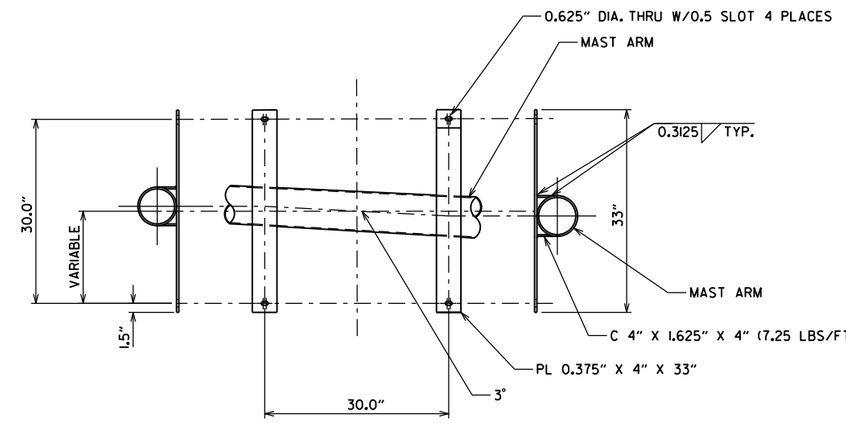

MOUNTING BRACKET

N.T.S.

DATE	REVISION	DATE FILM
9-12-13	ISSUED AS STANDARD DRAWING	
4-17-08	MINOR REVISIONS	
6-21-06	REVISED	
4-14-03	REVISED	
7-14-95	ISSUED	

ARKANSAS STATE HIGHWAY COMMISSION

OVERHEAD SIGN DETAILS
(OVERHEAD SIGN MOUNTED ON STEEL POLE WITH MAST ARM)

STANDARD DRAWING SD-16

SUPERELEVATION TABLE FOR ONE - WAY TRAFFIC

DEGREE OF CURVE	30 MPH			35 MPH			40 MPH			45 MPH		
	e	Ls (FT) MINIMUM	Ls (FT) DESIRABLE	e	Ls (FT) MINIMUM	Ls (FT) DESIRABLE	e	Ls (FT) MINIMUM	Ls (FT) DESIRABLE	e	Ls (FT) MINIMUM	Ls (FT) DESIRABLE
0° 15'	NC			NC			NC			NC		
0° 30'	NC			NC			NC			NC		
0° 45'	NC			NC			NC			NC		
1° 00'	NC			NC			NC			RC	108	
1° 15'	NC			NC			RC	101		0.022	114	
1° 30'	NC			RC	94		0.022	106		0.028	130	
1° 45'	RC	86		RC	94		0.026	116		0.030	136	
2° 00'	RC	86		0.024	103		0.028	121		0.034	146	
2° 15'	RC	86		0.026	108		0.032	131		0.038	157	
2° 30'	0.022	90		0.028	113		0.034	136		0.042	168	
2° 45'	0.024	95		0.030	118		0.038	146		0.046	179	
3° 00'	0.026	100		0.034	126		0.040	151		0.050	190	300
3° 15'	0.028	103		0.036	131		0.044	161		0.052	194	
3° 30'	0.030	108		0.038	136		0.046	167	250	0.056	205	
3° 45'	0.032	112		0.040	140		0.050	176		0.058	211	
4° 00'	0.034	116		0.042	145	250	0.052	181		0.062	222	
4° 15'	0.036	120		0.044	150		0.054	186		0.064	227	
4° 30'	0.036	120		0.046	155		0.056	192		0.068	238	
4° 45'	0.038	125		0.048	160		0.060	202		0.070	244	
5° 00'	0.040	130		0.050	164		0.062	206		0.072	248	
5° 30'	0.044	138	250	0.054	173		0.066	217		0.078	265	
6° 00'	0.046	143		0.058	182		0.070	227		0.082	276	
6° 30'	0.050	151		0.062	192		0.074	238		0.086	287	
7° 00'	0.052	156		0.064	197		0.078	247		0.090	298	
7° 30'	0.054	160		0.068	206		0.080	252		0.092	302	350
8° 00'	0.058	168		0.070	211		0.084	263		0.094	308	
8° 30'	0.060	173		0.072	215		0.086	268	300	0.096	313	
9° 00'	0.062	178		0.076	224		0.088	272		0.098	319	
9° 30'	0.064	181		0.078	229		0.092	282		0.100	324	
10° 00'	0.066	186		0.080	234		0.094	288				
11° 00'	0.070	194		0.084	244		0.096	293				
12° 00'	0.074	203		0.088	253		0.098	298				
13° 00'	0.076	208		0.090	258	300	0.100	302	350			
14° 00'	0.080	216		0.094	266							
15° 00'	0.082	221		0.096	271							
16° 00'	0.086	229		0.098	276							
17° 00'	0.088	233		0.100	281							
18° 00'	0.090	238										
19° 00'	0.092	242										
20° 00'	0.094	246										
21° 00'	0.096	251	300									
22° 00'	0.096	251										
23° 00'	0.098	254										
24° 00'	0.098	254										
25° 00'	0.100	259										
	D MAX = 28° 30'			D MAX = 19° 30'			D MAX = 13° 45'			D MAX = 10° 30'		

DEGREE OF CURVE	50 MPH			55 MPH			60 MPH			65 MPH		
	e	Ls (FT) MINIMUM	Ls (FT) DESIRABLE	e	Ls (FT) MINIMUM	Ls (FT) DESIRABLE	e	Ls (FT) MINIMUM	Ls (FT) DESIRABLE	e	Ls (FT) MINIMUM	Ls (FT) DESIRABLE
0° 15'	NC			NC			NC			NC		
0° 30'	NC			NC			RC	115		RC	115	
0° 45'	RC	115		RC	115		0.024	127		0.026	132	
1° 00'	0.022	121		0.026	132		0.030	144		0.034	156	
1° 15'	0.028	138		0.032	150		0.038	167		0.042	179	
1° 30'	0.032	150		0.038	167		0.044	185		0.050	202	350
1° 45'	0.036	161		0.044	185		0.050	202	350	0.056	218	
2° 00'	0.042	179		0.048	196		0.056	218		0.064	242	
2° 15'	0.046	190		0.054	214		0.062	236		0.070	259	
2° 30'	0.050	202		0.058	224	350	0.068	253		0.076	276	
2° 45'	0.054	214	300	0.064	242		0.072	265		0.082	294	
3° 00'	0.058	224		0.068	253		0.078	282		0.088	311	
3° 15'	0.062	236		0.072	265		0.082	294		0.092	323	400
3° 30'	0.066	247		0.076	276		0.086	305		0.096	334	
3° 45'	0.070	259		0.080	288		0.090	317		0.098	340	
4° 00'	0.072	265		0.084	300		0.094	329	400	0.100	346	
4° 15'	0.076	276		0.086	305		0.096	334				
4° 30'	0.078	282		0.090	317		0.098	340				
4° 45'	0.082	294		0.092	323		0.100	346				
5° 00'	0.084	300		0.094	329	400						
5° 30'	0.088	311		0.098	340							
6° 00'	0.092	323		0.100	346							
6° 30'	0.096	334	350									
7° 00'	0.098	340										
7° 30'	0.100	346										
8° 00'												
8° 30'												
9° 00'												
9° 30'												
10° 00'												
11° 00'												
12° 00'												
13° 00'												
14° 00'												
15° 00'												
16° 00'												
17° 00'												
18° 00'												
19° 00'												
20° 00'												
21° 00'												
22° 00'												
23° 00'												
24° 00'												
25° 00'												
	D MAX = 8° 25'			D MAX = 6° 30'			D MAX = 5° 15'			D MAX = 4° 15'		

DEGREE OF CURVE	70 MPH			75 MPH		
	e	Ls (FT) MINIMUM	Ls (FT) DESIRABLE	e	Ls (FT) MINIMUM	Ls (FT) DESIRABLE
0° 15'	NC			NC		
0° 30'	RC	115		0.022	121	
0° 45'	0.030	144		0.032	150	
1° 00'	0.038	167		0.042	179	350
1° 15'	0.046	190	350	0.052	208	
1° 30'	0.056	218		0.062	236	
1° 45'	0.064	242		0.070	259	
2° 00'	0.070	259		0.080	288	400
2° 15'	0.078	282		0.088	311	
2° 30'	0.086	305	400	0.096	334	450
2° 45'	0.092	323		0.100	346	
3° 00'	0.098	340	450			
3° 15'	0.100	346				
3° 30'						
3° 45'						
4° 00'						
4° 15'						
4° 30'						
4° 45'						
5° 00'						
5° 30'						
6° 00'						
6° 30'						
7° 00'						
7° 30'						
8° 00'						
8° 30'						
9° 00'						
9° 30'						
10° 00'						
11° 00'						
12° 00'						
13° 00'						
14° 00'						
15° 00'						
16° 00'						
17° 00'						
18° 00'						
19° 00'						
20° 00'						
21° 00'						
22° 00'						
23° 00'						
24° 00'						
25° 00'						
	D MAX = 3° 30'			D MAX = 2° 45'		

ABBREVIATIONS

NC - NORMAL CROWN
RC - REVERSE CROWN, SUPERELEVATION AT NORMAL CROWN SLOPE
S - SUPERELEVATION
L - DISTANCE FROM BEGINNING OF SUPERELEVATION TRANSITION TO ANY POINT (FT.)
d - WIDTH OF PAVEMENT
e - MAXIMUM RATE OF SUPERELEVATION (FT. PER FT.)
Ls - LENGTH OF SUPERELEVATION TRANSITION (FT.)
C - NORMAL CROWN (FT.)

GENERAL NOTES

1. ON PAVEMENT WITH ONE-WAY TRAFFIC, THE SUPERELEVATION SHALL BE REVOLVED ON THE PROFILE GRADE POINT.
2. SUPERELEVATION VALUES SHOWN ON THE CROSS SECTIONS ARE VALUES (+) OR (-) TO BE ADDED OR SUBTRACTED FROM THE POINT OF CONTROL.
3. LENGTHS FOR Ls MAY BE ROUNDED IN MULTIPLES OF 25 FT. OR 50 FT. TO PERMIT SIMPLER CALCULATIONS.
4. MINIMUM Ls VALUES MAY BE USED FOR RAMPS; DESIRABLE VALUES SHALL APPLY TO MAIN LANES.
5. DIVIDED PAVEMENTS WIDER THAN 4 LANES SHALL HAVE ADDITIONAL TRANSITION LENGTHS AS FOLOWS:

6 LANE DIVIDED---------+20%
8 LANE DIVIDED---------+50%

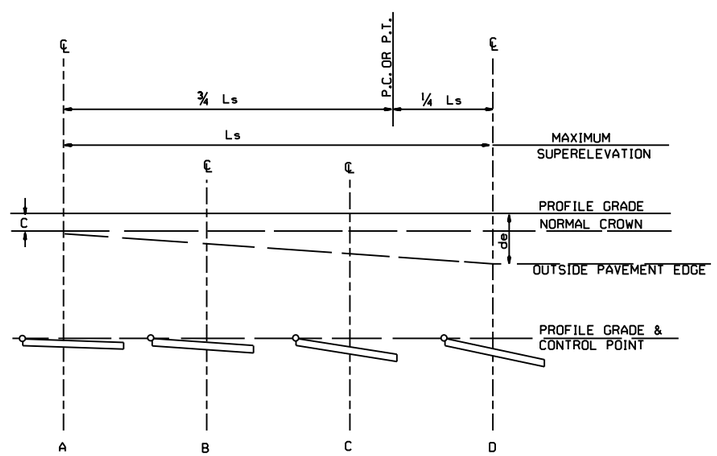

ONE-WAY TRAFFIC INSIDE LANE

SUPERELEVATION FORMULA = $S = -\frac{L(de-C)}{Ls} - C$

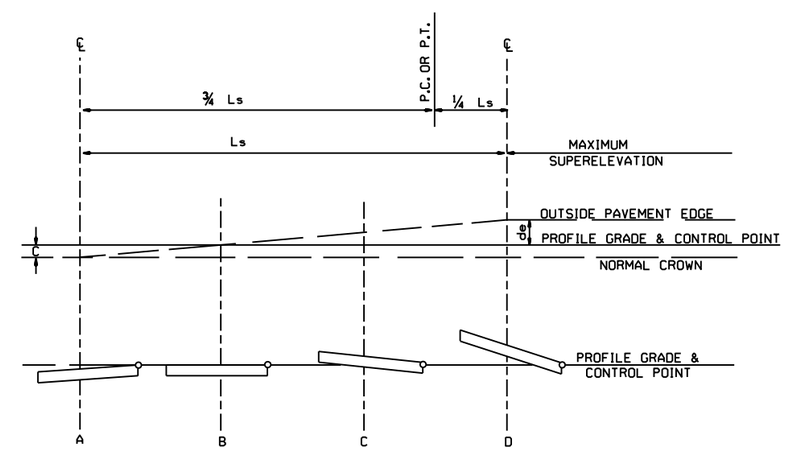

ONE-WAY TRAFFIC OUTSIDE LANE

SUPERELEVATION FORMULA = $S = +\frac{L(de+C)}{Ls} - C$

DATE	REVISION	DATE FILMED
11-07-19	REVISED SUPERELEVATION TABLE	
01-09-87	ISSUED	578-1-15-87

ARKANSAS STATE HIGHWAY COMMISSION

TABLES AND METHOD OF SUPERELEVATION FOR ONE-WAY TRAFFIC

STANDARD DRAWING SE-1

SUPERELEVATION TABLE FOR TWO - WAY TRAFFIC

DEGREE OF CURVE	30 MPH e	30 MPH Ls (FT) MINIMUM	30 MPH Ls (FT) DESIRABLE	35 MPH e	35 MPH Ls (FT) MINIMUM	35 MPH Ls (FT) DESIRABLE	40 MPH e	40 MPH Ls (FT) MINIMUM	40 MPH Ls (FT) DESIRABLE	45 MPH e	45 MPH Ls (FT) MINIMUM	45 MPH Ls (FT) DESIRABLE	50 MPH e	50 MPH Ls (FT) MINIMUM	50 MPH Ls (FT) DESIRABLE	55 MPH e	55 MPH Ls (FT) MINIMUM	55 MPH Ls (FT) DESIRABLE	60 MPH e	60 MPH Ls (FT) MINIMUM	60 MPH Ls (FT) DESIRABLE	65 MPH e	65 MPH Ls (FT) MINIMUM	65 MPH Ls (FT) DESIRABLE	70 MPH e	70 MPH Ls (FT) MINIMUM	70 MPH Ls (FT) DESIRABLE	75 MPH e	75 MPH Ls (FT) MINIMUM	75 MPH Ls (FT) DESIRABLE
0° 15'	NC			NC			NC			NC			NC			NC			NC			NC			NC			NC		
0° 30'	NC			NC			NC			NC			NC			NC			RC	96		RC	96		RC	96		0.022	101	
0° 45'	NC			NC			NC			NC			RC	96		RC	96		0.024	106		0.026	110		0.030	120		0.032	125	
1° 00'	NC			NC			NC			RC	90		0.022	101		0.026	110		0.030	120		0.034	130		0.038	139		0.042	149	300
1° 15'	NC			NC			RC	84		0.022	95		0.028	115		0.032	125		0.038	139		0.042	149		0.046	158	300	0.052	173	
1° 30'	NC			RC	78		0.022	88		0.028	108		0.032	125		0.038	139		0.044	154		0.050	168		0.056	182		0.062	197	
1° 45'	RC	72		RC	78		0.026	97		0.030	113		0.036	134		0.044	154		0.050	168	300	0.056	182	300	0.064	202		0.070	216	
2° 00'	RC	72		0.024	86		0.028	101		0.034	122		0.042	149		0.048	163		0.056	182		0.064	202		0.070	216		0.080	240	
2° 15'	RC	72		0.026	90		0.032	109		0.038	131		0.046	158		0.054	178	300	0.062	197		0.070	216		0.078	235		0.088	259	350
2° 30'	0.022	75		0.028	94		0.034	113		0.042	140		0.050	168		0.058	187		0.068	211		0.076	230		0.086	254	350	0.096	278	
2° 45'	0.024	79		0.030	98		0.038	122		0.046	149	200	0.054	178	250	0.064	202		0.072	221		0.082	245		0.092	269		0.100	288	400
3° 00'	0.026	83		0.034	105		0.040	126		0.050	158		0.058	187		0.068	211		0.078	235		0.088	259		0.098	283		D MAX = 2° 45'		
3° 15'	0.028	86		0.036	109		0.044	134	200	0.052	162		0.062	197		0.072	221		0.082	245		0.092	269		0.100	288	400			
3° 30'	0.030	90		0.038	113		0.046	139		0.056	171		0.066	206		0.076	230		0.086	254		0.096	278	350	D MAX = 3° 30'					
3° 45'	0.032	93		0.040	117		0.050	147		0.058	176		0.070	216		0.080	240		0.090	264		0.098	283							
4° 00'	0.034	97		0.042	121	200	0.052	151		0.062	185		0.072	221		0.084	250		0.094	274	350	0.100	288							
4° 15'	0.036	100		0.044	125		0.054	155		0.064	189		0.076	230		0.086	254		0.096	278		D MAX = 4° 15'								
4° 30'	0.036	100	200	0.046	129		0.056	160		0.068	198		0.078	235		0.090	264		0.098	283										
4° 45'	0.038	104		0.048	133		0.060	168		0.070	203		0.082	245		0.092	269	350	0.100	288										
5° 00'	0.040	108		0.050	137		0.062	172		0.072	207		0.084	250		0.094	274		D MAX = 5° 15'										
5° 30'	0.044	115		0.054	144		0.066	181		0.078	221	250	0.088	259		0.098	283													
6° 00'	0.046	119		0.058	152		0.070	189		0.082	230		0.092	269		0.100	288													
6° 30'	0.050	126		0.062	160		0.074	198		0.086	239		0.096	278	300	D MAX = 6° 30'														
7° 00'	0.052	130		0.064	164		0.078	206		0.090	248		0.098	283																
7° 30'	0.054	133		0.068	172		0.080	210		0.092	252	300	0.100	288																
8° 00'	0.058	140		0.070	176		0.084	219		0.094	257		D MAX = 8° 25'																	
8° 30'	0.060	144		0.072	179		0.086	223	250	0.096	261																			
9° 00'	0.062	148		0.076	187		0.088	227		0.098	266																			
9° 30'	0.064	151		0.078	191		0.092	235		0.100	270																			
10° 00'	0.066	155		0.080	195		0.094	240		D MAX = 10° 30'																				
11° 00'	0.070	162		0.084	203		0.096	244																						
12° 00'	0.074	169		0.088	211	250	0.098	248																						
13° 00'	0.076	173		0.090	215		0.100	252	300																					
14° 00'	0.080	180		0.094	222		D MAX = 13° 45'																							
15° 00'	0.082	184		0.096	226																									
16° 00'	0.086	191		0.098	230																									
17° 00'	0.088	194		0.100	234																									
18° 00'	0.090	198	250	D MAX = 19° 30'																										
19° 00'	0.092	202																												
20° 00'	0.094	205																												
21° 00'	0.096	209																												
22° 00'	0.096	209																												
23° 00'	0.098	212																												
24° 00'	0.098	212																												
25° 00'	0.100	216																												
D MAX = 28° 30'																														

ABBREVIATIONS

NC - NORMAL CROWN
RC - REVERSE CROWN, SUPERELEVATION AT NORMAL CROWN SLOPE
e - RATE OF SUPERELEVATION (FT. PER FT.)
Ls - LENGTH OF SUPERELEVATION TRANSITION (FT.)
L - DISTANCE FROM BEGINNING OF SUPERELEVATION TRANSITION TO ANY POINT (FT.)
d - WIDTH OF PAVEMENT (FT.) OR WIDTH OF SUBGRADE (FT.)
C - NORMAL CROWN (FT.)

GENERAL NOTES

1. ON PAVEMENT WITH TWO-WAY TRAFFIC, THE SUPERELEVATION SHALL BE REVOLVED ON THE INSIDE PAVEMENT EDGE UNLESS OTHERWISE NOTED ON THE PLANS
2. SUPERELEVATION VALUES SHOWN ON THE CROSS SECTIONS ARE VALUES (+) OR (-) TO BE ADDED TO OR SUBTRACTED FROM THE POINT OF CONTROL.
3. LENGTHS FOR L MAY BE ROUNDED IN MULTIPLES OF 25 FT. OR 50 FT. TO PERMIT SIMPLER CALCULATIONS.
4. PAVEMENTS WIDER THAN 2 LANES SHALL HAVE ADDITIONAL TRANSITION LENGTHS AS FOLLOWS:

3 LANE UNDIVIDED - - - - - +20%
4 LANE UNDIVIDED - - - - - +50%
5 LANE UNDIVIDED - - - - - +80%
6 LANE UNDIVIDED - - - - - +100%

NOTE: MAINTAIN NORMAL CROWN ON INSIDE UNTIL SUPERELEVATION EXCEEDS 2C.

RATE OF SUPERELEVATION SHALL BE COMPUTED ON STRAIGHT LINE METHOD USING APPLICABLE Ls.

SUPERELEVATION FORMULA $= \frac{Lde}{Ls}$

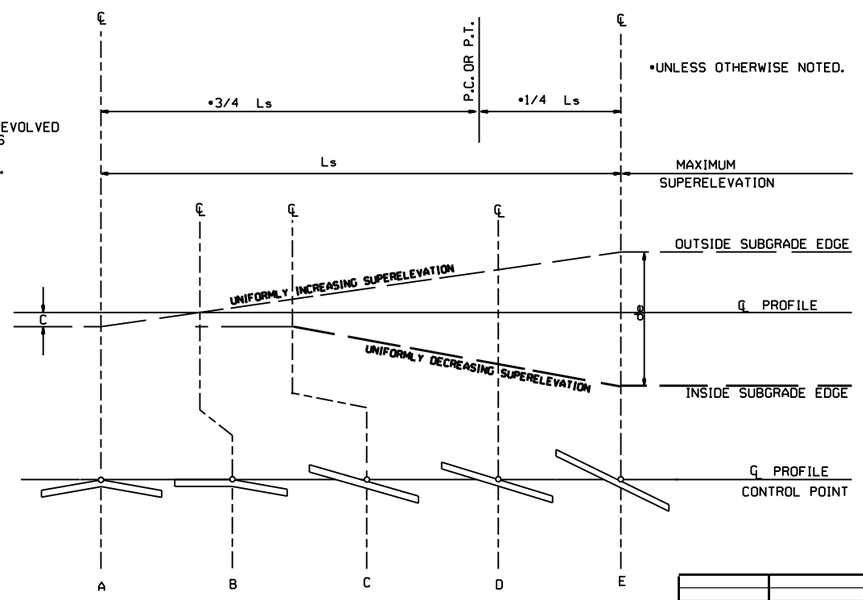

STANDARD METHOD WHEN SUPERELEVATION REVOLVES AROUND CENTER LINE

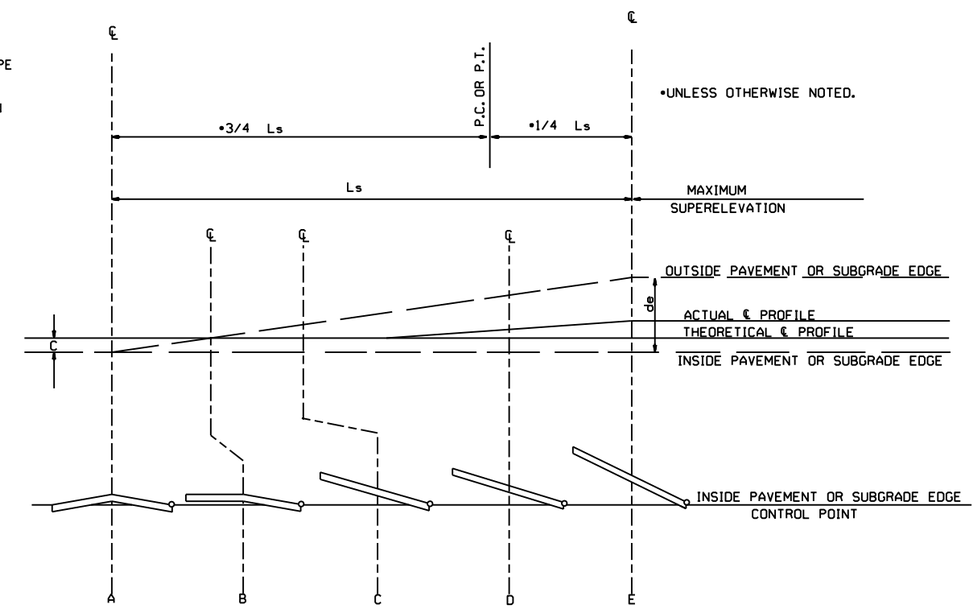

STANDARD METHOD WHEN SUPERELEVATION REVOLVES AROUND INNER SUBGRADE POINT OR INNER PAVEMENT EDGE

NOTE: MAINTAIN NORMAL CROWN ON INSIDE UNTIL SUPERELEVATION EXCEEDS 2C.

DATE	REVISION	DATE FILMED
11-07-19	REVISED SUPERELEVATION TABLE	
10-18-96	ADDED FORMULA	
01-09-87	ISSUED	534-1-9-87

ARKANSAS STATE HIGHWAY COMMISSION

TABLES AND METHOD OF SUPERELEVATION FOR TWO-WAY TRAFFIC

STANDARD DRAWING SE-2

SUPERELEVATION TABLE FOR TWO - WAY TRAFFIC (4% MAXIMUM)

DEGREE OF CURVE	30 MPH e	30 MPH Ls (FT) MINIMUM	30 MPH Ls (FT) DESIRABLE
0° 15'	NC		
0° 30'			
0° 45'			
1° 00'			
1° 15'			
1° 30'			
1° 45'			
2° 00'			
2° 15'	RC	72	100
2° 30'			
2° 45'			
3° 00'			
3° 15'	0.022	75	
3° 30'			
3° 45'	0.024	79	
4° 00'			
4° 15'			
4° 30'			
4° 45'	0.026	83	
5° 00'			
5° 30'			
6° 00'	0.028	86	125
6° 30'			
7° 00'			
7° 30'	0.030	90	
8° 00'			
8° 30'	0.032	93	
9° 00'			
9° 30'			
10° 00'	0.034	97	
10° 30'			
11° 00'			
11° 30'			
12° 00'	0.036	100	
12° 30'			
13° 00'			
13° 30'			
14° 00'	0.038	104	
14° 30'			
15° 00'			
15° 30'			
16° 00'			
16° 30'	0.040	108	150

D MAX = 22° 45'

DEGREE OF CURVE	35 MPH e	35 MPH Ls (FT) MINIMUM	35 MPH Ls (FT) DESIRABLE
0° 15'	NC		
0° 30'			
0° 45'			
1° 00'			
1° 15'			
1° 30'			
1° 45'	RC	78	100
2° 00'			
2° 15'			
2° 30'	0.022	82	
2° 45'	0.024	86	125
3° 00'			
3° 15'			
3° 30'	0.026	90	
3° 45'			
4° 00'			
4° 15'	0.028	94	
4° 30'			
4° 45'			
5° 00'	0.030	98	
5° 30'			
6° 00'	0.032	101	
6° 30'			
7° 00'	0.034	105	150
7° 30'			
8° 00'			
8° 30'	0.036	109	
9° 00'			
9° 30'	0.038	113	
10° 00'			
10° 30'			
11° 00'			
11° 30'	0.040	117	

D MAX = 15° 15'

DEGREE OF CURVE	40 MPH e	40 MPH Ls (FT) MINIMUM	40 MPH Ls (FT) DESIRABLE
0° 15'	NC		
0° 30'			
0° 45'			
1° 00'			
1° 15'	RC	84	100
1° 30'			
1° 45'			
2° 00'	0.022	88	
2° 15'	0.024	92	125
2° 30'	0.026	97	
2° 45'			
3° 00'	0.028	101	
3° 15'			
3° 30'			
3° 45'	0.030	105	
4° 00'			
4° 15'	0.032	109	150
4° 30'			
4° 45'			
5° 00'	0.034	113	
5° 30'			
6° 00'	0.036	118	
6° 30'			
7° 00'	0.038	122	
7° 30'			
8° 00'	0.040	126	

D MAX = 10° 30'

DEGREE OF CURVE	45 MPH e	45 MPH Ls (FT) MINIMUM	45 MPH Ls (FT) DESIRABLE
0° 15'	NC		
0° 30'			
0° 45'			
1° 00'	RC	90	125
1° 15'			
1° 30'	0.022	95	
1° 45'	0.024	99	
2° 00'	0.026	104	
2° 15'			
2° 30'	0.028	108	150
2° 45'	0.030	113	
3° 00'			
3° 15'	0.032	117	
3° 30'			
3° 45'	0.034	122	
4° 00'			
4° 15'			
4° 30'	0.036	126	
4° 45'			
5° 00'	0.038	131	
5° 30'			
6° 00'	0.040	135	

D MAX = 8° 00'

ABBREVIATIONS

NC - NORMAL CROWN
RC - REVERSE CROWN, SUPERELEVATION AT NORMAL CROWN SLOPE
e - RATE OF SUPERELEVATION (FT. PER FT.)
Ls - LENGTH OF SUPERELEVATION TRANSITION (FT.)
L - DISTANCE FROM BEGINNING OF SUPERELEVATION TRANSITION TO ANY POINT (FT.)
d - WIDTH OF PAVEMENT (FT.) OR WIDTH OF SUBGRADE (FT.)
C - NORMAL CROWN (FT.)

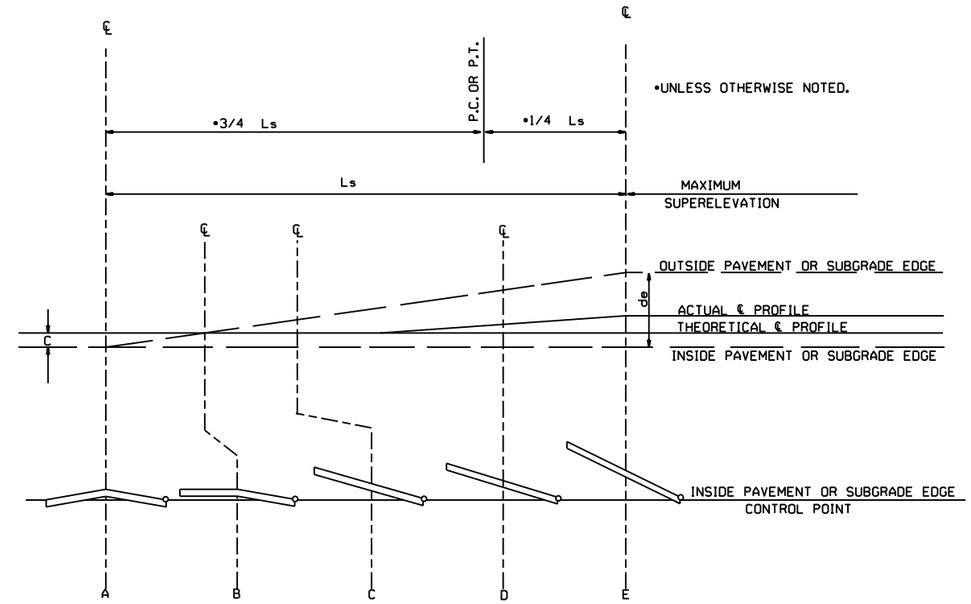

STANDARD METHOD WHEN SUPERELEVATION REVOLVES AROUND INNER SUBGRADE POINT OR INNER PAVEMENT EDGE

NOTE: MAINTAIN NORMAL CROWN ON INSIDE UNTIL SUPERELEVATION EXCEEDS 2C.

SUPERELEVATION FORMULA $= \frac{Lde}{Ls}$

GENERAL NOTES

1. ON PAVEMENT WITH TWO-WAY TRAFFIC, THE SUPERELEVATION SHALL BE REVOLVED ON THE INSIDE PAVEMENT EDGE UNLESS OTHERWISE NOTED ON THE PLANS
2. SUPERELEVATION VALUES SHOWN ON THE CROSS SECTIONS ARE VALUES (+) OR (-) TO BE ADDED TO OR SUBTRACTED FROM THE POINT OF CONTROL.
3. LENGTHS FOR L MAY BE ROUNDED IN MULTIPLES OF 25 FT. OR 50 FT. TO PERMIT SIMPLER CALCULATIONS.
4. PAVEMENTS WIDER THAN 2 LANES SHALL HAVE ADDITIONAL TRANSITION LENGTHS AS FOLLOWS:

3 LANE UNDIVIDED - - - - - +20%
4 LANE UNDIVIDED - - - - - +50%
5 LANE UNDIVIDED - - - - - +80%
6 LANE UNDIVIDED - - - - - +100%

NOTE: MAINTAIN NORMAL CROWN ON INSIDE UNTIL SUPERELEVATION EXCEEDS 2C.

RATE OF SUPERELEVATION SHALL BE COMPUTED ON STRAIGHT LINE METHOD USING APPLICABLE Ls.

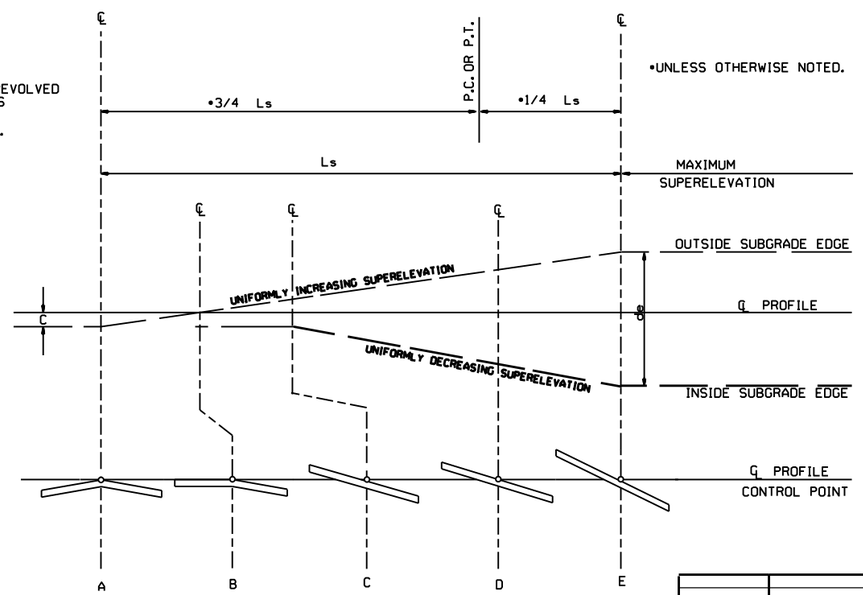

STANDARD METHOD WHEN SUPERELEVATION REVOLVES AROUND CENTER LINE

DATE	REVISION	DATE FILMED
11-07-19	ISSUED	

ARKANSAS STATE HIGHWAY COMMISSION

TABLES AND METHOD OF SUPERELEVATION FOR TWO-WAY TRAFFIC (4% MAXIMUM)

STANDARD DRAWING SE-3

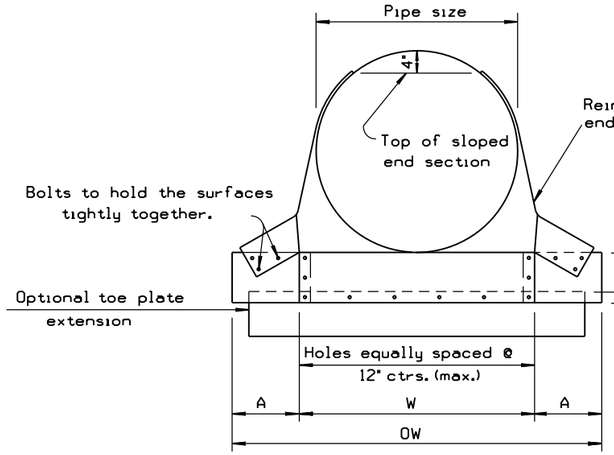

FRONT VIEW CIRCULAR PIPE

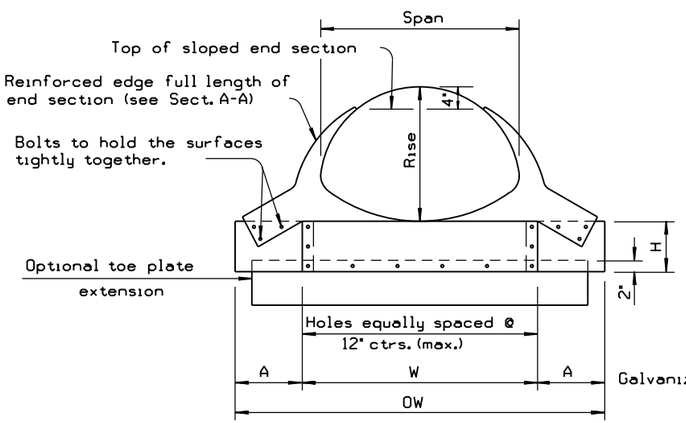

FRONT VIEW ARCH PIPE

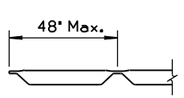

LONGITUDINAL BAR DETAIL

Note: Bars shown are for Cross Drain Structures.

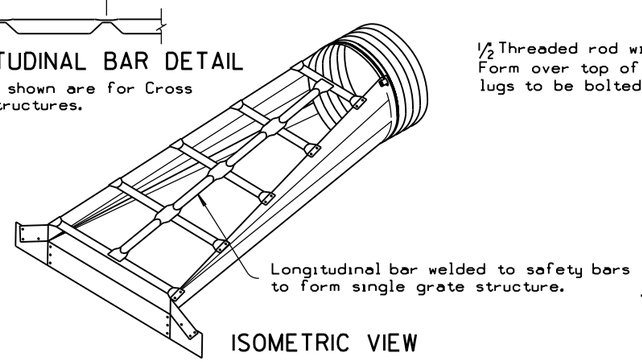

ISOMETRIC VIEW

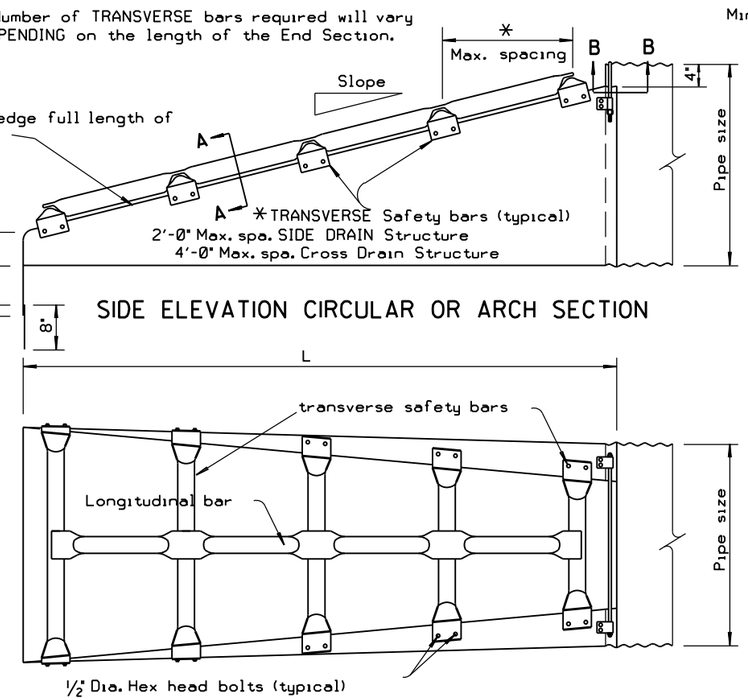

SIDE ELEVATION CIRCULAR OR ARCH SECTION

TOP VIEW CIRCULAR OR ARCH SECTION

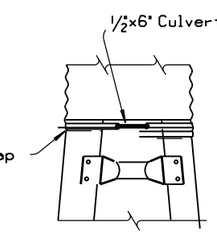

TYPE #1 CONNECTOR DETAIL

For 15" thru 24" pipe

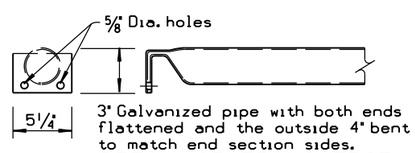

DETAIL OF TRANSVERSE SAFETY BAR

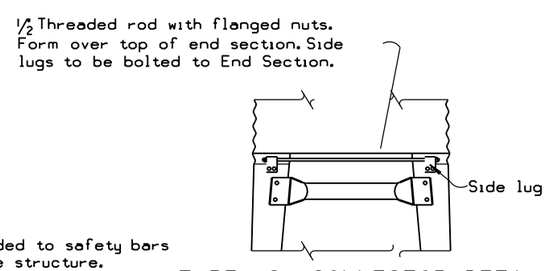

TYPE #2 CONNECTOR DETAIL

For 30" and larger round pipes & 21"x15" thru 64"x43" arch pipes

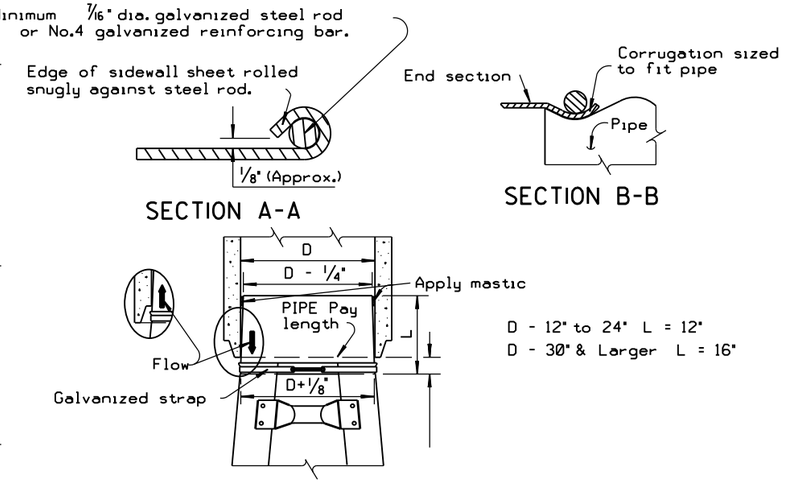

SECTION A-A

SECTION B-B

Note: Metal end section to be firmly wedged INTO PIPE END BEFORE BACKFILLING PIPE.

(Tapered sleeve to be 12 Ga. smooth galvanized steel in accordance with AASHTO M 218.)

STEEL END SECTION FOR CONCRETE PIPE
(Alternate for Concrete End Section)

GENERAL NOTES

End sections shall be fabricated from galvanzied steel meeting the requirements of SUBSECTION 606.02(c)(1) OF THE STANDARD SPECIFICATIONS.
When specified optional toe plate extension shall be punched and bolted to end section apron lip with 3/8" diameter galvanized bolts.
Steel for toe plate extension shall be same gauge as end section.
Dimensions shall be overall width less 6" by 8" high.
Attachment to circular pipes 15" through 24" diameter shall be made with Type #1 straps. All other sizes shall be attached with Type #2 rods and lugs.
Safety bars shall be fabricated from steel pipe meeting the requirements of ASTM A-53 Schedule 40 Specifications. Safety bars shall be hot dipped galvanized after fabrication.
All work and materials required for construction and installation of safety end section shall be included in the PRICE BID EACH FOR SAFETY END SECTIONS FOR PIPE CULVERTS.
Longitudinal and transverse bars will be required for cross drain structures when span is greater than 30". no safety bars will be REQUIRED FOR 30" SPAN OR LESS WHEN USED ON CROSS DRAIN STRUCTURES.
Transverse bars will be required for all sizes of side drain structures.
Class I safety end sections shall be end sections with a 4:1 slope.
Class 2 safety end sections shall be end sections with a 6:1 slope.

SAFETY END SECTIONS FOR ARCH PIPES

Equv. Dia.	Nom. W.W. Area Sq Ft	Pipe Arch Span (In.)	Pipe Arch Rise (In.)	Min. Gauge End Sect.	Dimensions in Inches A	H	W	OW	Slope	L (In)	Slope	L (In)
18"	1.6	21	15	16	8	6	27	43	4:1	20	6:1	30
21"	2.2	24	18	16	8	6	30	46	4:1	32	6:1	48
24"	2.9	28	20	16	8	6	34	50	4:1	40	6:1	60
30"	4.5	35	24	14	12	9	41	65	4:1	56	6:1	84
36"	6.5	42	29	12	12	9	48	72	4:1	76	6:1	114
42"	8.9	49	33	12	16	12	55	87	4:1	92	6:1	138
48"	11.6	57	38	12	16	12	63	95	4:1	112	6:1	168
54"	14.7	64	43	12	16	12	70	102	4:1	132	6:1	198
60"	18.1	71	47	12	16	12	77	109	4:1	148	6:1	222
72"	26.0	83	57	12	16	12	89	121	4:1	188	6:1	282

SAFETY END SECTIONS FOR CIRCULAR PIPES

Pipe Dia.	Min. Gauge Ends	Dimensions in Inches A 1"Tol	H 1"Tol	W 2"Tol	OW	Slope	L	L Dimensions in Inches Slope	L
15"	16	8	6	21	37	4:1	20	6:1	30
18"	16	8	6	24	40	4:1	32	6:1	48
21"	16	8	6	27	43	4:1	44	6:1	66
24"	16	8	6	30	46	4:1	56	6:1	84
30"	12	12	9	36	60	4:1	80	6:1	120
36"	12	12	9	42	66	4:1	104	6:1	156
42"	12	16	12	48	80	4:1	128	6:1	192
48"	12	16	12	54	86	4:1	152	6:1	228
54"	12	16	12	60	92	4:1	176	6:1	264
60"	12	16	12	66	98	4:1	200	6:1	300

DATE	REVISION	DATE FILMED
10-18-96	REVISED ASTM REF. TO AASHTO	
8-15-91	DRAWN & ISSUED	

ARKANSAS STATE HIGHWAY COMMISSION

SAFETY END SECTION FOR CIRCULAR AND ARCH PIPES

STANDARD DRAWING SES-1

R1-1
30"X30"

W1-3
30"X30"
(LT. OR RT.)

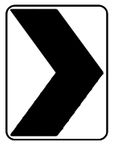

W1-8
18"X24"

W2-5
30"X30"

W3-1
36"X36"

W5-1
36"X36"

M6-3
21"X15"

R1-2
36"X36"X36"

W1-4
30"X30"
(LT. or RT.)

W2-1
30"X30"

S1-1
36"X36"

W3-2
36"X36"

County
Route Marker
M1-6
24"X24"

NOTE: REFLECTORIZED YELLOW LEGEND (COUNTY NAME, ROUTE LETTER & NUMBER) & BORDER ON A BLUE BACKGROUND.

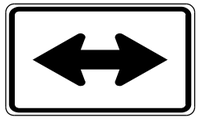

M6-4
21"X15"

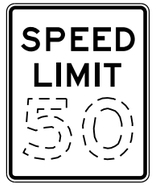

R2-1
24"X30"

W1-5
30"X30"
(LT. or RT.)

W2-2
30"X30"

W5-2
36"X36"

W8-3
36"X36"

R1-3P
18"X6"

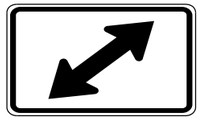

M6-5
21"X15"

W1-1
30"X30"
(LT. or RT.)

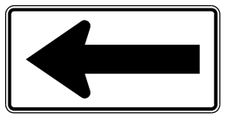

W1-6
48"X24"

W2-3
30"X30"
(LT. or RT.)

W5-3
36"X36"

W13-1P
18"X18"

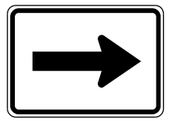

M6-1
21"X15"

NOTE: ALL M6 SIGNS TO BE MADE WITH REFLECTORIZED YELLOW ARROW & BORDER WITH BLUE BACKGROUND.

M6-6
21"X15"

W1-2
30"X30"
(LT. or RT.)

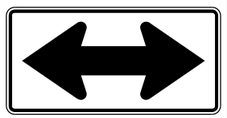

W1-7
48"X24"

W2-4
30"X30"

W10-1
36" DIAMETER

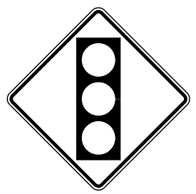

W3-3
36"X36"

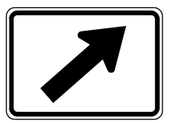

M6-2
21"X15"

S4-3P
24"X8"

S4-2P
24"X10"

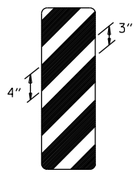

OM-3
12"X36"
(LT. or RT.)

MINIMUM DIMENSIONS SHOWN

SUPPORT SECTION

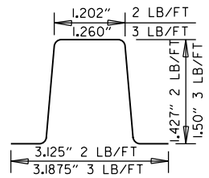

(U-CHANNEL)
STANDARD SUPPORT
ASSEMBLIES

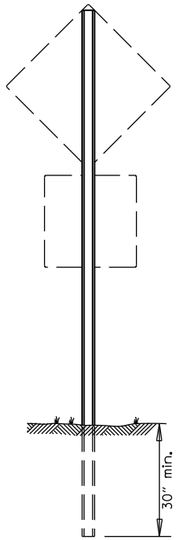

TYPE A

NOTE: LENGTH OF SIGN POSTS SHALL BE DETERMINED SO AS TO PROVIDE FOR MINIMUM VERTICAL CLEARANCES AS CALLED FOR IN THE SPECIFICATIONS PLUS A MINIMUM VERTICAL PENETRATION OF 30" IN THE SOIL.

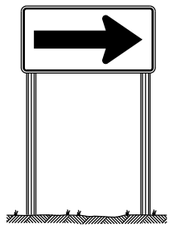

TYPE B

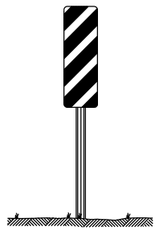

TYPE C

MINIMUM WEIGHT

TYPE A & B = 3 LBS./FT.
TYPE C = 2 LBS./FT.

STANDARD HIGHWAY SIGNS

DATE	REVISION	DATE FILMED
9-12-13	DELETED JOB NO. BLOCK; REVISED R1-3 TO R1-3P	
4-17-08	REVISED SIGN DESIGNATION - W3-1 & W3-2	
4-10-03	REVISED W5-2, W8-3, OM-3; ADDED W1-8	
1-5-81	REDRAWN	960-1-15-81
9-15-78	ADDED W14-3	877-9-15-78
9-2-76	POST WT.	623-9-3-76
5-3-76	STEEL POST WT. FROM 2#-3#; ADDED S4-2 & S4-3	504-5-3-76
8-12-74	REV. HT. TYPE "C" ASSEMBLY	500-8-21-74
12-21-72	ADDED M6-2,3,4,5,6	500-12-21-72
12-1-72	ISSUED	562-12-1-72

SUPPORT ASSEMBLIES

ARKANSAS STATE HIGHWAY COMMISSION

STANDARD HIGHWAY SIGNS AND SUPPORT ASSEMBLIES

STANDARD DRAWING SHS-1

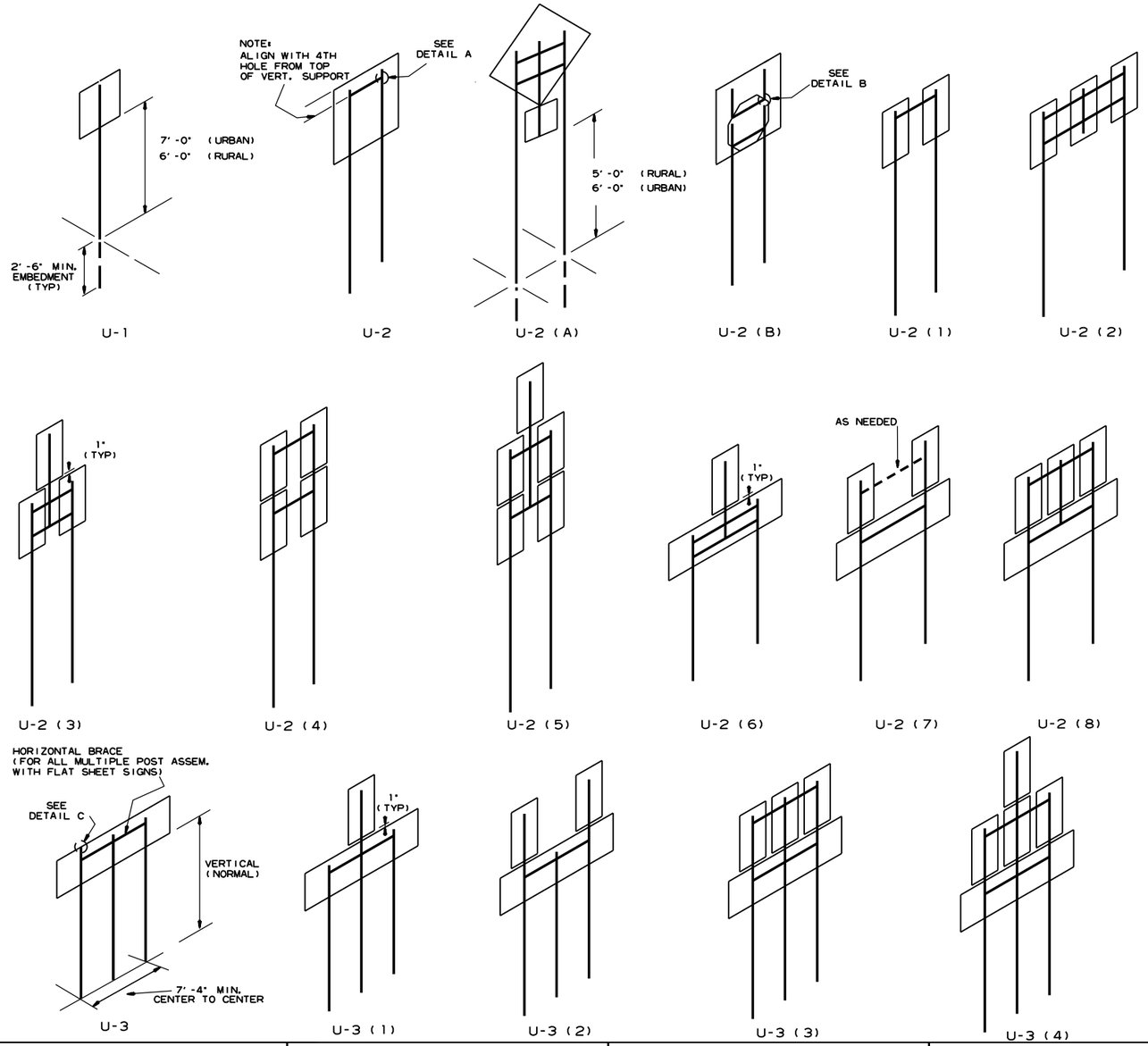

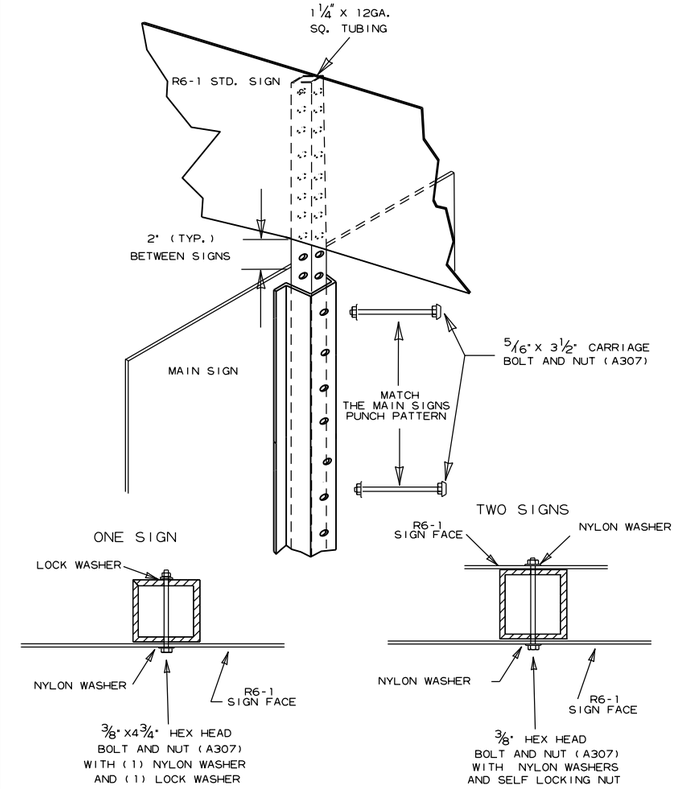

DETAIL E
R6-1 EXTENSION FOR U-CHANNEL POST

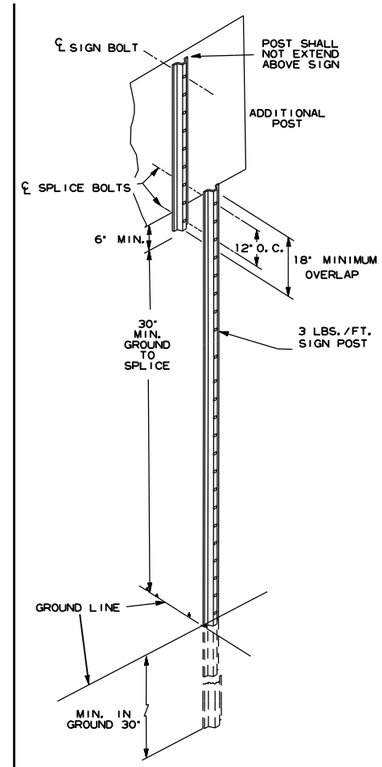

DETAIL F
DETAIL OF SPLICES

NOTES:

SIGNS AT LEAST 8' IN LENGTH MAY BE INSTALLED ON THREE 3 LB. POST. IN NO CASE SHALL THERE BE MORE THAN TWO 3 LB. POSTS WITHIN A 7' PATH.

SPLICES NECESSARY TO ATTAIN PROPER MOUNTING HEIGHT SHALL BE AS SHOWN IN DETAIL (F).

NORMAL INSTALLATIONS WILL REQUIRE 5/16" DIA. CARRIAGE BOLTS TO MOUNT SIGNS TO POST AND TO ASSEMBLE THE VARIOUS POST SUPPORTS.

ALL SIGN POSTS SHALL BE PLUMB.

THE POST FOR "TYPE U" SUPPORTS SHALL BE HOT DIP GALVANIZED.

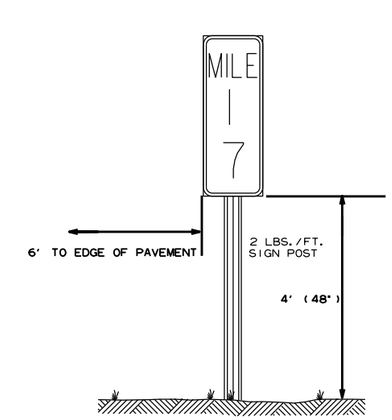

TYPICAL MILE MARKER INSTALLATION

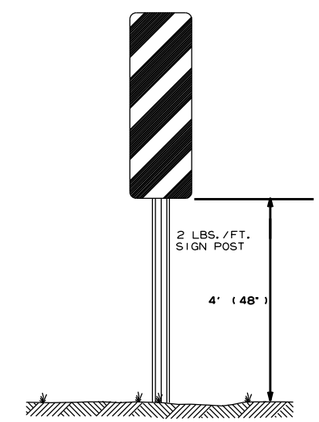

TYPICAL OM-3 INSTALLATION AT EDGE OF OBSTRUCTION

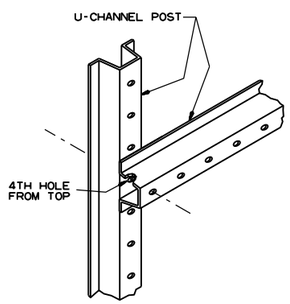

DETAIL A
SHOWING HORIZONTAL BRACE

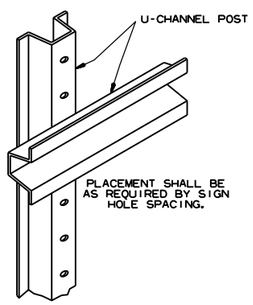

DETAIL B
SHOWING BACK-TO-BACK INSTALLATION

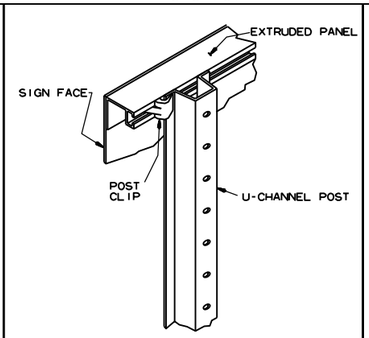

DETAIL C
SHOWING GUIDE SIGN MOUNTING WITH EXTRUDED PANELS

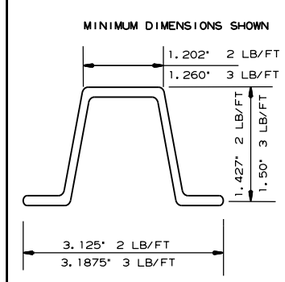

DETAIL C
U-CHANNEL POST

DATE	REVISION	FILMED
7-25-19	REVISED CARRIAGE BOLT WITH MATERIAL REQUIREMENT	
2-27-14	REVISED NOTES.	
9-12-13	REVISED U-2(3), U-2(6), U-3(1), DETAIL D; ADDED DETAILS E & F; ADDED TYPICAL MARKERS	
10-9-03	REMOVED ROUND POST & REVISED SPACING	
10-12-95	MOVED UPPER SPLICE	
6-8-95	REVISED SPLICE DETAIL	6-8-95
2-2-95	REDRAWN	2-2-95

ARKANSAS STATE HIGHWAY COMMISSION

U-CHANNEL POST ASSEMBLIES

STANDARD DRAWING SHS-2

POST SIZE	BASE CONNECTION DATA											FUSE PLATE DATA										
	BOLT SIZE	BOLT TORQUE (INCH/LBS)	A	B	C	D	E	t_1	t_2	W	R	F	G		J	K	M	d_1	d_2	t_3	BOLT SIZE	WT. OF EACH FUSE PLATE LBS.
W 6X9	5/8" x 2 3/4"	450"-680"	5"	2"	1 1/4"	2 3/4"	1 1/8"	3/4"	1/2"	1/4"	11/32"	4 1/4"	2"		4"	2 1/4"	1"	9/16"	3/4"	1/4"	1/2" x 1 1/2"	1.01
W 6X12												5"	2 1/2"		6"	3 1/2"	1 1/2"	11/16"	1 1/4"	3/8"	5/8" x 2 1/4"	2.51
W 6X15												5"	2 1/2"		5 1/4"	2 3/4"	1 1/4"	13/16"	1 1/16"	3/8"	3/4" x 2 1/4"	2.26
W 8X18	3/4" x 3 1/2"	750"-1050"	6"	2 1/4"	1 3/8"	3 1/2"	1 1/4"	1"	3/4"	9/16"	13/32"	5 1/2"	2 1/2"		5 1/4"	2 3/4"	1 1/4"	13/16"	1"	1/2"	3/4" x 2 1/4"	3.35
W 8X21												6"	3"		5 3/4"	2 3/4"	1 3/8"	13/16"	1 1/8"	1/2"	3/4" x 2 1/4"	4.03
W 10X22												6"	3"		6 1/2"	3 1/2"	1 5/8"	13/16"	1 5/16"	1/2"	3/4" x 2 1/4"	4.47
W 10X26																						
W 12X26																						

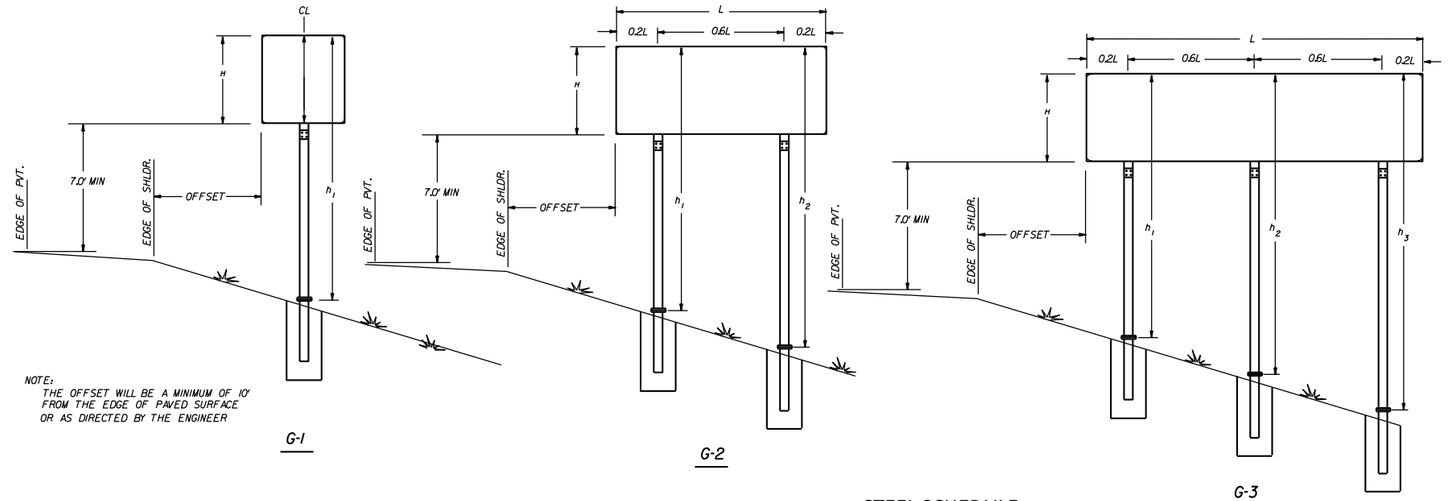

NOTE:
THE OFFSET WILL BE A MINIMUM OF 10' FROM THE EDGE OF PAVED SURFACE OR AS DIRECTED BY THE ENGINEER

G-1 G-2 G-3

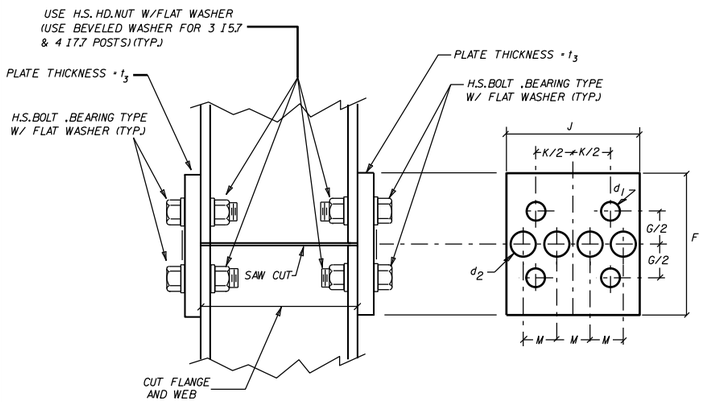

NOTE: USE H.S.HEX HEAD BOLTS.HEX HEAD NUTS AND BEVEL OR FLAT WASHERS (WHERE REQ.) UNDER NUTS. ALL HOLES SHALL BE DRILLED.ALL PLATE CUTS SHALL PREFERABLY BE SAW CUTS.HOWEVER FLAME CUTTING WILL BE PERMITTED PROVIDED ALL EDGES ARE GROUND. METAL PROJECTING BEYOND THE PLANE OF THE PLATE FACE WILL NOT BE PERMITTED. STEEL FUSE PLATES SHALL CONFORM TO THE REQUIREMENTS OF ASTM-A36,ASTM-A441,ASTM-572 GRADE 50,OR ASTM-A588 MAY BE SUBSTITUTED FOR A36 AT THE OPTION OF THE FABRICATOR. STEEL USED SHALL HAVE AN ULTIMATE TENSILE STRENGTH NOT TO EXCEED 80 KSI.

NOTE: SECTIONS SHOWN ARE FOR INSTALLATION ON THE RIGHT SHOULDER AND IN THE GORE. BOLT HOLES IN BASE PLATE ARE SLOTTED AND BEVELED AS SHOWN. USE H.S.BOLTS WITH HEX HD.,HEX NUT AND THREE FLAT WASHERS FOR EACH BOLT.SEE TABLE FOR BOLT DIA. AND TORQUE.
NOTE: ASSEMBLE SIGN POST TO STUB POST USING THE BOLTS SPEC.IN THE TABLE AND AS SHOWN IN THE ELEVATION DETAILS.THERE SHALL BE THREE FLAT WASHERS ON EACH BOLT LOCATED AS SHOWN IN THE ELEVATIONS.USE A SHIM TO PLUMB THE SIGN POST.THEN TIGHTEN THE BOLTS USING A 12" TO 15" WRENCH UNTIL THE WASHERS AND SHIMS ARE SEATED AND THE BOLT THREADS ARE CLEAR ,THEN LOOSEN EACH BOLT IN TURN AND RETIGHTEN IN A SYSTEMATIC ORDER TO THE PRESCRIBED TORQUE (SEE TABLE).THE BURR THREADS ADJACENT TO THE BACK SIDE OF THE NUT TO PREVENT LOOSENING.

STEEL SCHEDULE

FOOTING DIAMETER	#3 TIE BARS DIAMETER	BAR LENGTH	POUNDS
INCHES	INCHES	FEET	
18	12	4.39	1.65
24	18	5.96	2.24
30	24	7.53	2.83
36	30	9.1	3.42

FOOTINIG DEPTH	#6 STRAIGHT BARS BAR LENGTH	NUMBER REQ'D.	POUNDS
FEET	FEET		
2.50	2.00	8	24.03
3.00	2.50	8	30.04
3.50	3.00	8	36.05
4.00	3.50	8	42.06
4.50	4.00	8	48.06
5.00	4.50	8	54.07
5.50	5.00	8	60.08
6.00	5.50	8	66.09
6.50	6.00	8	72.10
7.00	6.50	8	78.10
7.50	7.00	8	84.11
8.00	7.50	8	90.12

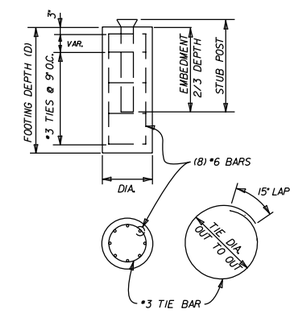

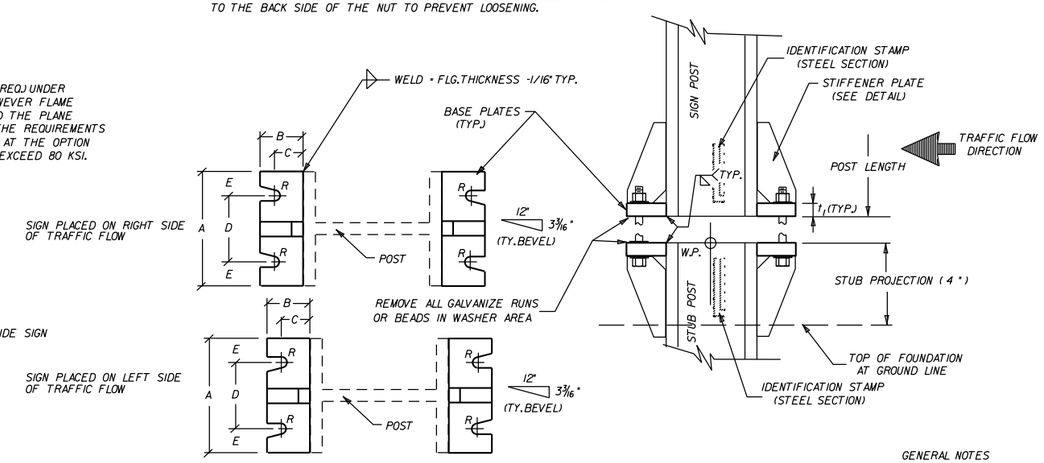

NOTE: BOLT HOLES,USED IN THE MOUNTING OF STANDARD SIGNS SHALL BE LOCATED IN THE FLANGE ADJACENT TO THE NEAR EDGE OF PAVEMENT FOR SINGLE POST ASSEMBLIES AND IN THE OUTSIDE FLANGES FOR MULTIPLE POST ASSEMBLIES.

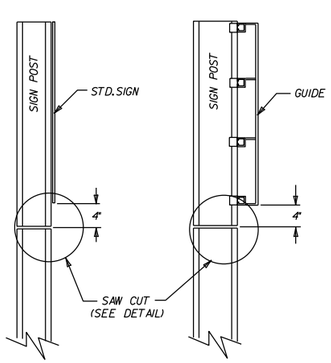

NOTE: POST SHALL BE SAW CUT AFTER GALVANIZING AND THE CUT SURFACE TREATED. AFTER PLATE IS INSTALLED AND ALL BOLTS FULLY TIGHTENED. REPAIR OF CUT SURFACES AFTER GALVANIZING SHALL BE IN ACCORDANCE WITH ASTM A123.

STANDARD SIGNS GUIDE SIGNS

FUSE PLATE DETAILS

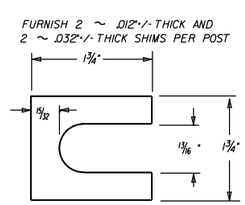

SHIM DETAIL

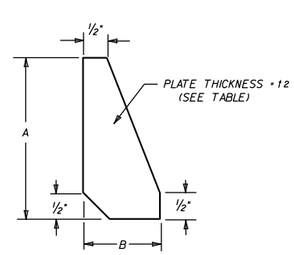

STIFFENER PLATE DETAIL

GENERAL NOTES

TIGHTEN THE HIGH STRENGTH BOLTS IN THE BASE CONNECTION ONLY TO THE TORQUE SHOWN. DO NOT OVERTIGHTEN.

BASE PLATES AND STIFFENER PLATES SHALL BE OF THE SAME MATERIAL AS THE PRIMARY SUPPORT POSTS WHICH THEY ARE WELDED.

REFER TO THE PLANS FOR FOOTING DIMENSIONS.

EACH STUB POST AND SIGN POST SHALL HAVE A PERMANENT IDENTIFYING STAMP WHICH SPECIFIES THE STEEL SECTION USED. IF THE CONTRACTOR ELECTS TO SHIP THE STUB POST SEPARATE FROM THE SIGN POST A MATCH MARK SYSTEM WILL BE REQUIRED.

FOOTING QUANTITIES

FOOTINIG DEPTH	NUMBER TIE BARS REQ'D	18" DIAMETER CLASS S CONCRETE	18" DIAMETER REINF STEEL	24" DIAMETER CLASS S CONCRETE	24" DIAMETER REINF STEEL	30" DIAMETER CLASS S CONCRETE	30" DIAMETER REINF STEEL	36" DIAMETER CLASS S CONCRETE	36" DIAMETER REINF STEEL
FEET		CU. YD.	(GRADE 60)	CU. YD.	(GRADE 60)	CU. YD.	(GRADE 60)	CU. YD.	(GRADE 60)
2.50	4	0.16	31						
3.00	4	0.20	37						
3.50	5	0.23	44						
4.00	6	0.26	52	0.47	56				
4.50	6	0.29	58	0.52	62				
5.00	7	0.33	66	0.58	70	0.91	74		
5.50	8			0.64	78	1.00	83		
6.00	8			0.70	84	1.09	89	1.57	93
6.50	9					1.18	98	1.70	103
7.00	10					1.27	106	1.83	112
7.50	10							1.96	118
8.00	11							2.09	128

SIGN POST AND STUB POST

DATE	REVISION	FILMED
5-19-22	REVISED FUSE PLATE DETIALS' NOTE.	
9-12-13	ISSUED	

ARKANSAS STATE HIGHWAY COMMISSION

DETAIL OF BREAKAWAY SIGN SUPPORTS FOR GUIDE SIGNS

STANDARD DRAWING SHS-3

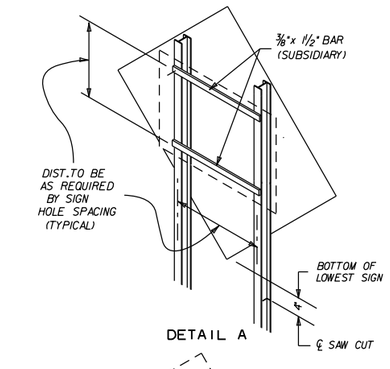

DETAIL A

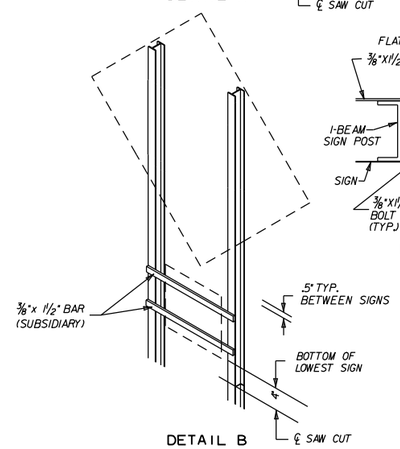

DETAIL B

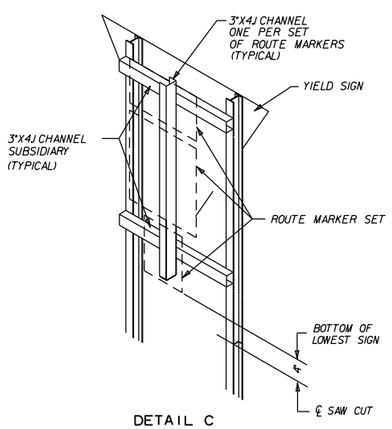

DETAIL C

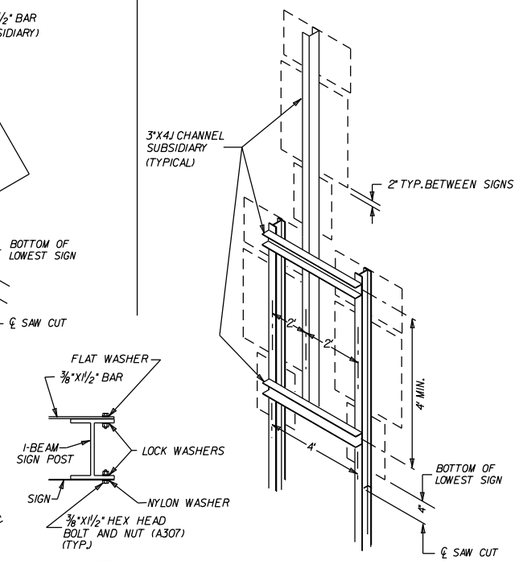

DETAIL F

DETAIL D

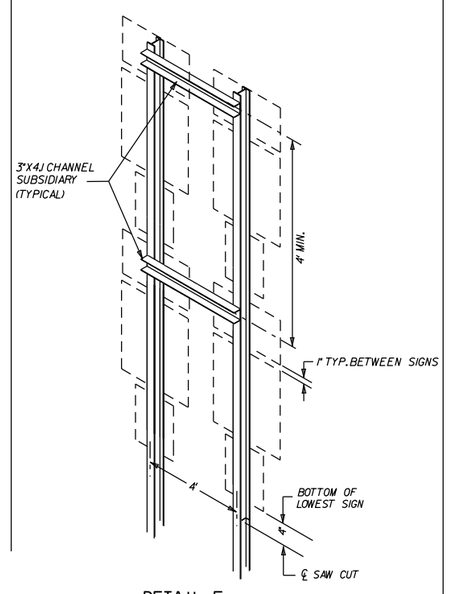

DETAIL E

NOTE

ALL ADDITIONAL MOUNTING HARDWARE, BOLTS, NUTS, CHANNELS AND BAR STRAPS REQUIRED TO MOUNT SECONDARY SIGNS WILL BE CONSIDERED TO BE SUPPLEMENTAL TO THE MAIN SIGN SUPPORT SPECIFIED. PAYMENT WILL BE CONSIDERED SUBSIDIARY TO THE MAIN SUPPORT.

THE GALVANIZED STEEL CHANNEL AND BAR SUPPORTS MAY BE ASTM A-36.

REFER TO THE P.C. RUTLEDGE FORMULA ON PAGE 58 OF THE AASHTO PUBLICATION "STANDARD SPECIFICATIONS FOR STRUCTURAL SUPPORTS FOR HIGHWAY SIGNS, LUMINAIRES, AND TRAFFIC SIGNALS.

ALL BOLT HOLES SHALL BE 1/8" DIA. UNLESS OTHERWISE SHOWN.

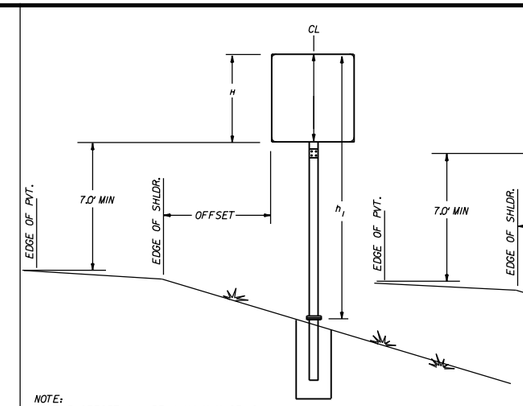

NOTE:
THE OFFSET WILL BE A MINIMUM OF 10' FROM THE EDGE OF PAVED SURFACE OR AS DIRECTED BY THE ENGINEER.

G-1

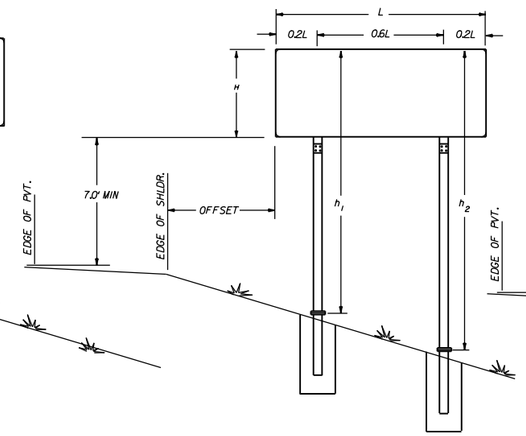

G-2

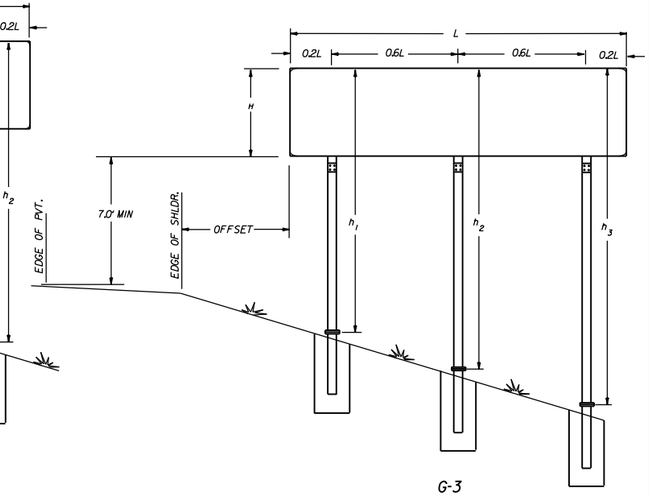

G-3

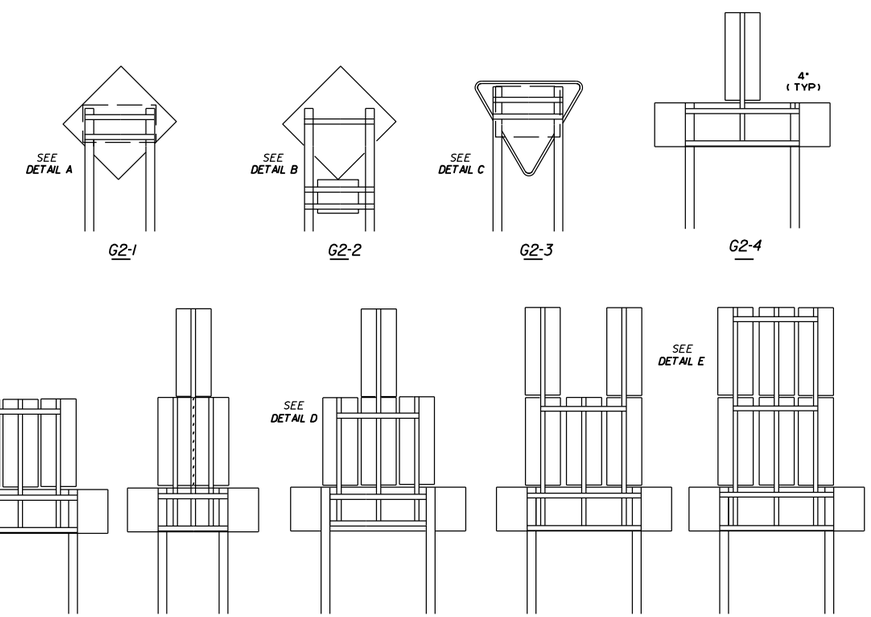

G2-1 G2-2 G2-3 G2-4 G2-5 G2-6 G2-7 G2-8 G2-9 G2-10

9-12-13	ISSUED	
DATE	REVISION	FILMED

ARKANSAS STATE HIGHWAY COMMISSION

DETAIL OF BREAKAWAY SIGN SUPPORTS FOR STANDARD SIGNS

STANDARD DRAWING SHS-4

TYPICAL DETAIL

TYPE A

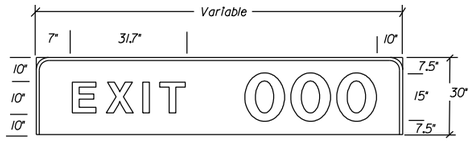

EXIT WITH 1 DIGIT 84"X30"=17.50 SF
EXIT WITH 2 DIGITS 96"X30"=20.0 SF
EXIT WITH 3 DIGITS 114"X30"=23.57 SF

TYPE B

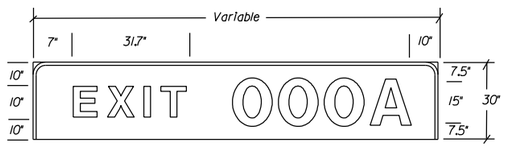

EXIT WITH 1 DIGIT PLUS "A"OR"B" 96"X30"=20.0 SF
EXIT WITH 2 DIGITS PLUS "A"OR"B" 114"X30"=23.57 SF
EXIT WITH 3 DIGITS PLUS "A"OR"B" 126"X30"=26.25 SF

TYPE C

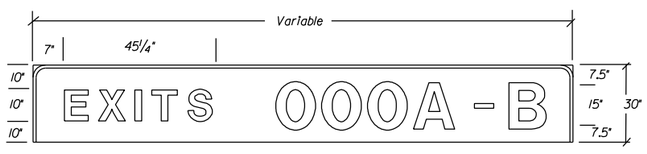

EXITS WITH 1 DIGIT PLUS "A"&"B" 132"X30"=27.50 SF
EXITS WITH 2 DIGITS PLUS "A"&"B" 150"X30"=31.25 SF
EXITS WITH 3 DIGITS PLUS "A"&"B" 168"X30"=35.00 SF

TYPE D

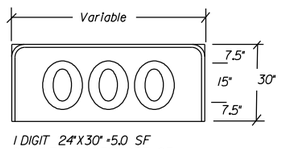

1 DIGIT 24"X30" =5.0 SF
2 DIGITS 42"X30" =8.75 SF
3 DIGITS 60"X30" =12.50 SF

TYPE E

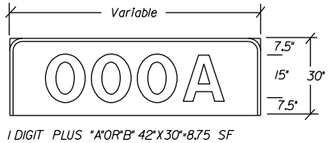

1 DIGIT PLUS "A"OR"B" 42"X30"=8.75 SF
2 DIGITS PLUS "A"OR"B" 60"X30"=12.50 SF
3 DIGITS PLUS "A"OR"B" 78"X30"=16.25 SF

EXIT PANEL DETAILS

NOTE: EXIT NUMBER PANELS SHALL HAVE WHITE LEGENDS AND BORDERS. THE BACK GROUND COLOR WILL BE AS USE SPECIFIES. SHEETING TYPE WILL BE THE SAME AS THE GUIDE SIGN WHICH THE EXIT PANEL IS ATTACHED OR AS SPECIFIED IN THE PLANS. PAYMENT FOR ALL POST CLIPS, BOLTS, AND ANGLES SHALL BE SUBSIDIARY TO THE ITEM "EXIT NUMBER PANEL".

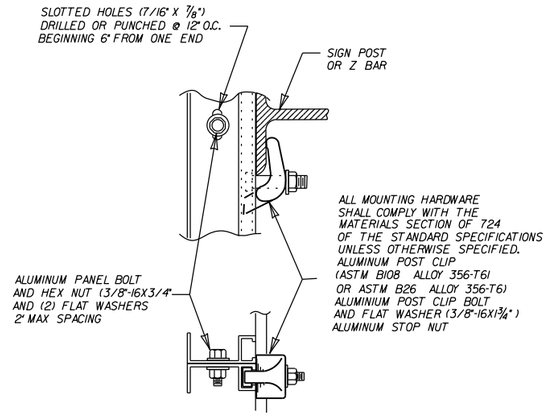

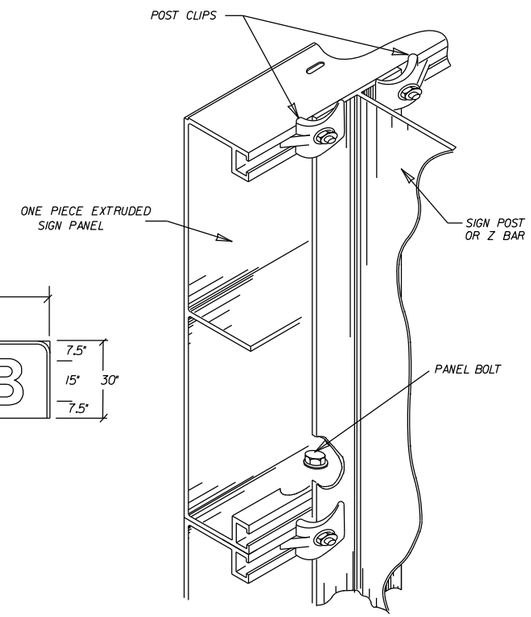

MOUNTING HARDWARE

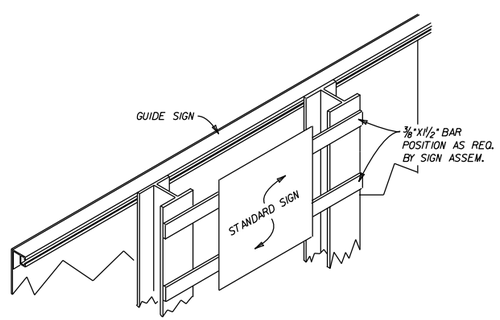

SECONDARY SIGN INSTALLATION ON BACKSIDE OF GUIDE SIGN

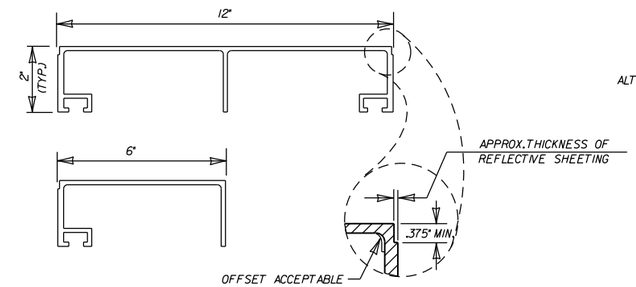

ONE PIECE EXTRUDED SIGN PANELS

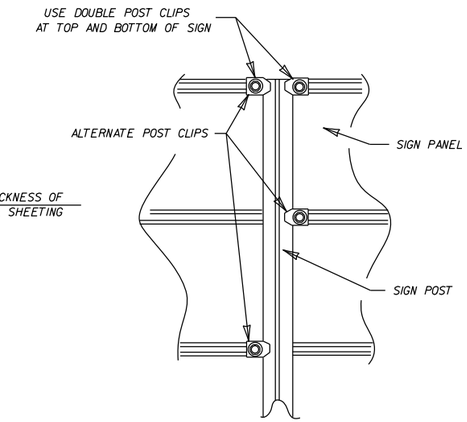

POST CLIP PLACEMENT

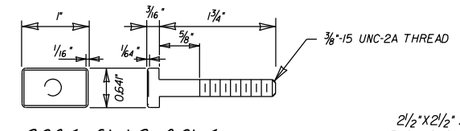

POST CLIP BOLT

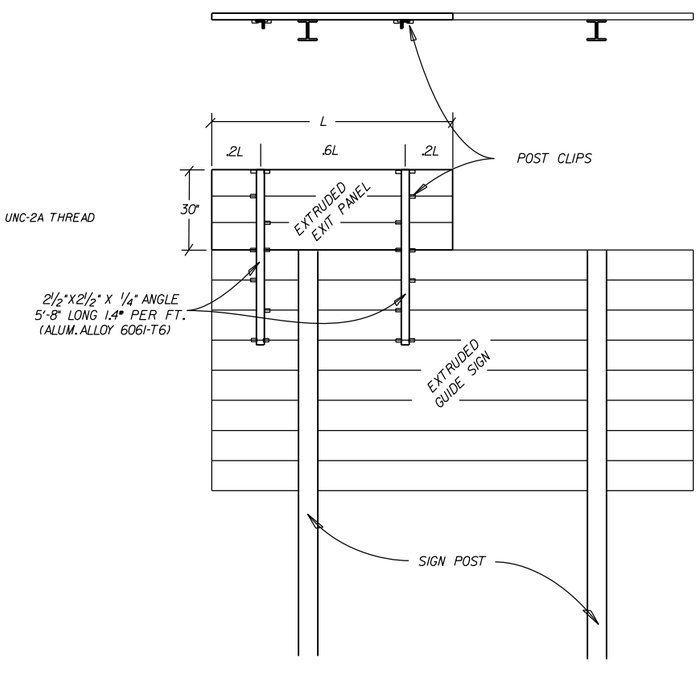

DATE	REVISION	FILMED
9-12-13	ISSUED	

ARKANSAS STATE HIGHWAY COMMISSION

DETAILS OF GUIDE SIGN PANELS

STANDARD DRAWING SHS-5

THE CONTRACTOR SHALL DRILL AND POP-RIVET LEGEND, SHIELDS, ARROWS, OR OTHER COPY AS SHOWN.

MOUNTING DETAILS FOR DEMOUNTABLE LEGEND ON GUIDE SIGNS

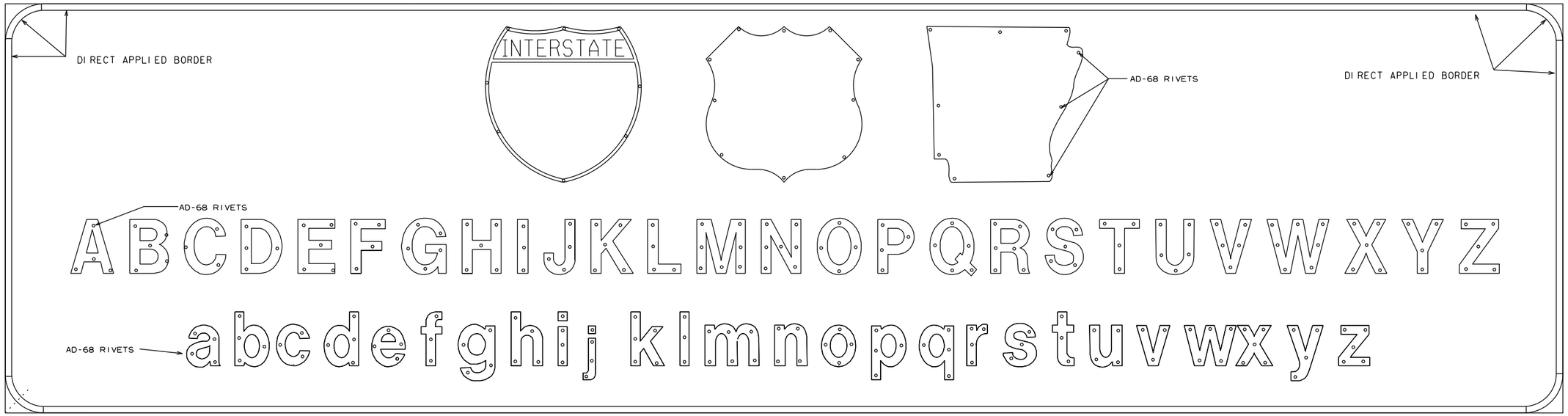

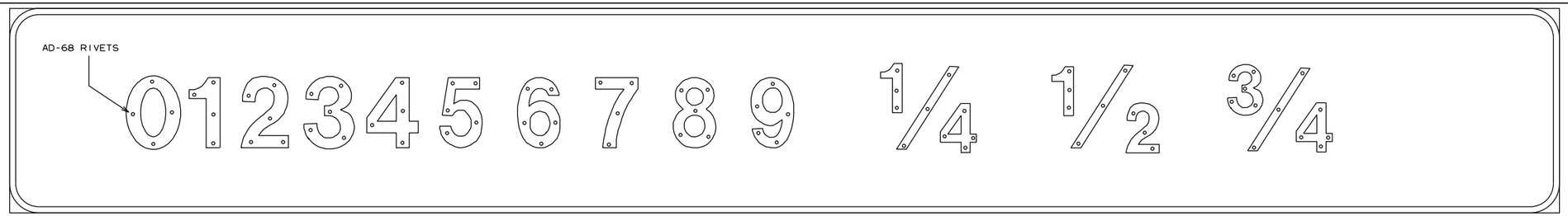

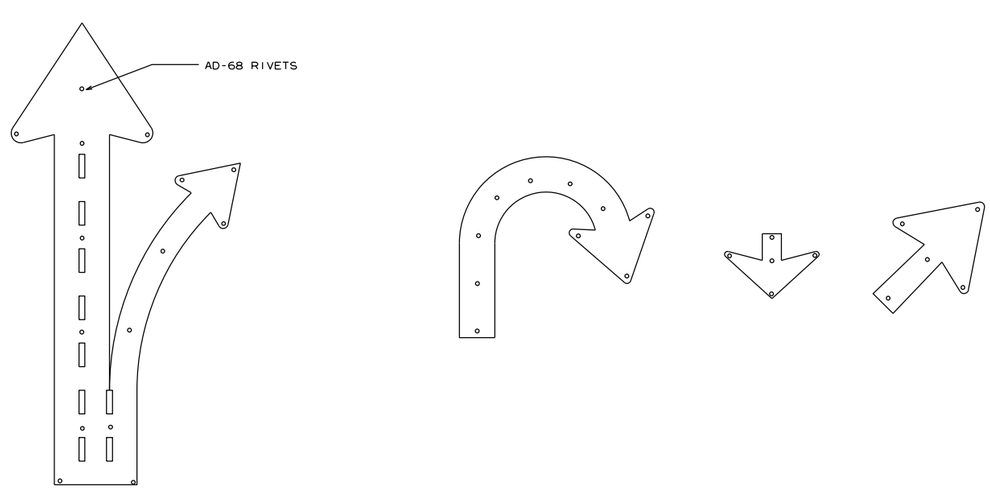

NOTES:

LEGEND ON GUIDE SIGNS ON THE MAIN LANES SHALL BE DEMOUNTABLE LEGEND. LEGEND ON GUIDE SIGNS ON CROSS ROADS AND RAMPS SHALL BE DIRECT APPLIED. THE DEMOUNTABLE AND DIRECT APPLIED LEGENDS SHALL BE TYPE IX SHEETING.

THE BACKGROUND ON ALL GUIDE SIGNS AND STANDARD SIGNS SHALL BE CONSTRUCTED USING TYPE III SHEETING.

TYPE IX SHEETING FOR BORDER, LEGEND, SHIELDS, ARROWS, OR OTHER COPY SHALL BE ORIENTED VERTICALLY AS PER MANUFACTURERS' DATUM MARKS, ORIENTATION MARKS, OR OTHER RECOMMENDATIONS.

SIGN LEGEND, SHIELDS, ARROWS OR OTHER COPY SHALL BE APPLIED WITH RIVETS ONLY.

NO OTHER METHOD OF APPLYING CHARACTERS IS ALLOWED.

DATE	REVISION	FILMED
9-12-13	ISSUED	

ARKANSAS STATE HIGHWAY COMMISSION

MOUNTING DETAILS FOR DEMOUNTABLE LEGEND ON GUIDE SIGNS

STANDARD DRAWING SHS-6

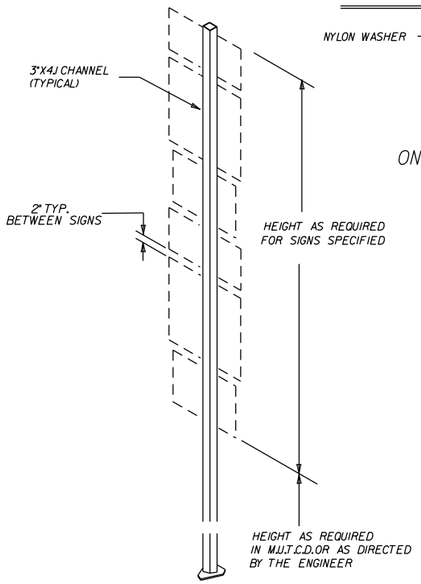

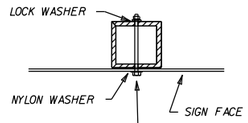

ONE SIGN

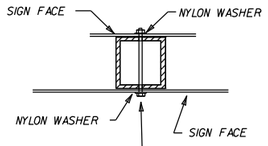

TWO SIGNS

CHANNEL SHALL BE FULL LENGTH OF RECTANGULAR AND SQUARE SIGNS AND SHALL EXTEND 1 1/2" BEYOND BOLT HOLES ON DIAMOND OR IRREGULAR SHAPED SIGNS.

MOUNTING HARDWARE

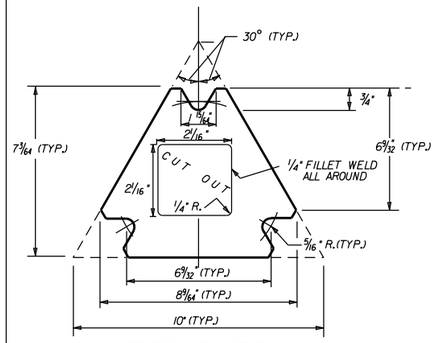

TOP PLATE

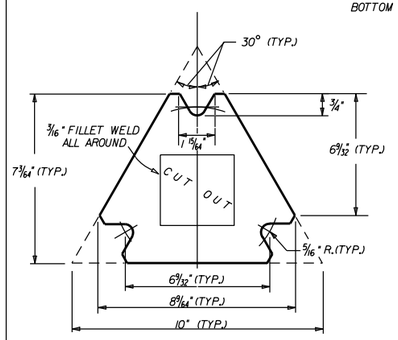

BOTTOM PLATE

GENERAL NOTES:

THE TOP PLATE OF TRIANGULAR SLIP BASES SHALL HAVE THE SAME EXTERIOR DIMENSIONS AS THE BOTTOM PLATE.

INSIDE DIAMETER OF THE SIGN POST SHALL BE CUT THROUGH THE CENTER OF THE TOP PLATE WITH THE HOLE EDGE BEVELED AS SHOWN. THE BEVEL END SHALL BE TANGENT TO THE BOLT HOLE. ANY MISALIGNMENT SHALL BE REMOVED BY GRINDING. FACE OF BEVEL SHALL BE FINISHED TO A MINIMUM SMOOTHNESS OF 1-500.

OTHER MASH COMPLIANT BREAKAWAY SIGN SUPPORTS THAT HAVE THE SAME TOP PLATE DIMENSIONS AND SUPPORT 2 1/4" X 2 1/4" SQUARE TUBE SIGN POSTS MAY BE SUBSTITUTED AS APPROVED BY THE ENGINEER.

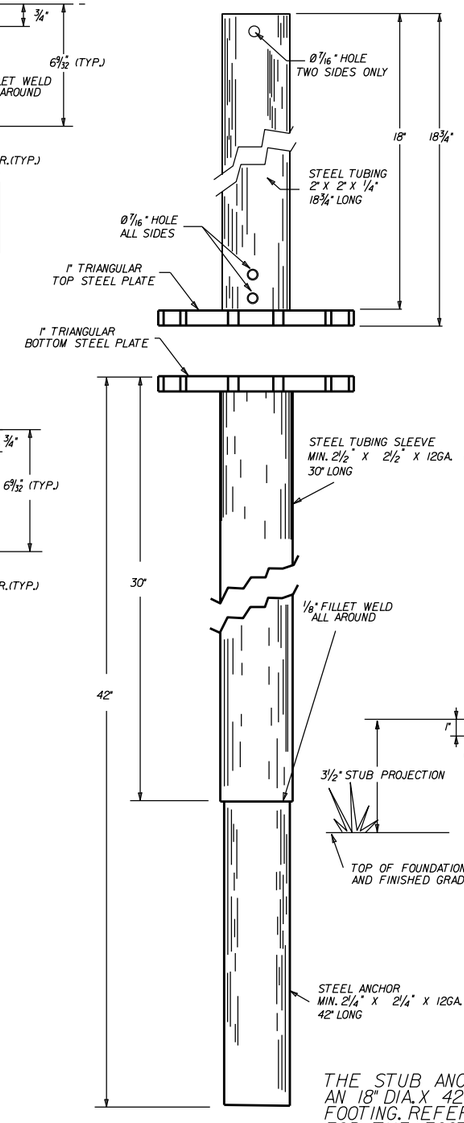

THE STUB ANCHOR SHALL BE SET IN AN 18" DIA. X 42" DEEP CONCRETE FOOTING. REFER TO STD. DRWG. SHS-3 FOR THE FOOTING DETAILS.

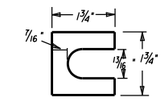

FURNISH (2) .012" THICK AND (2) .032" THICK SHIMS PER POST

SHIM DETAIL

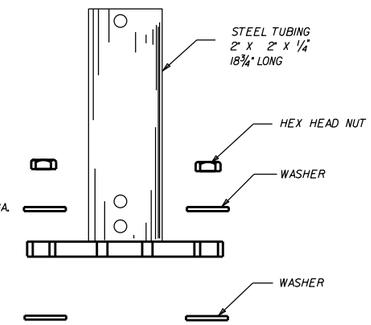

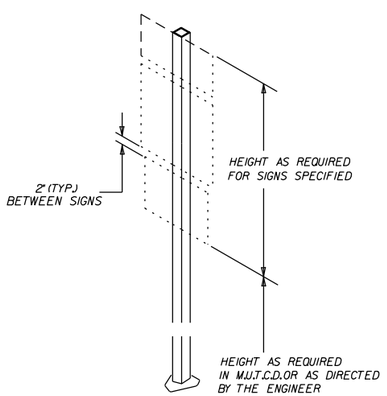

TYPE-1

BASIS OF ESTIMATE
APPROX. 100 lbs STEEL

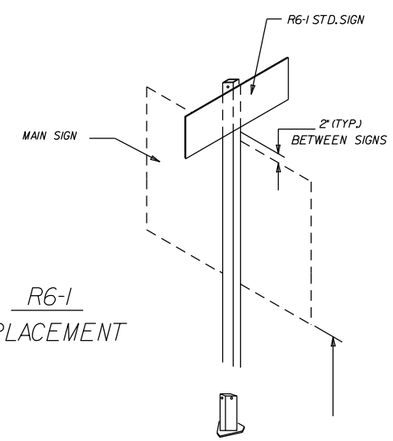

R6-1 PLACEMENT

			ARKANSAS STATE HIGHWAY COMMISSION
			DETAIL OF OMNI-DIRECTIONAL BREAKAWAY SIGN SUPPORTS
9-12-13	ISSUED		STANDARD DRAWING SHS-7
DATE	REVISION	FILMED	

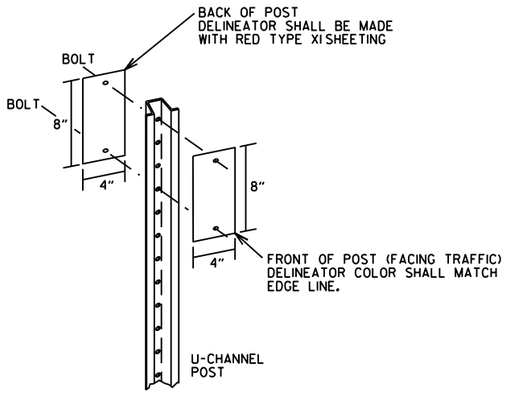

TYPE 2 DELINEATOR DETAILS

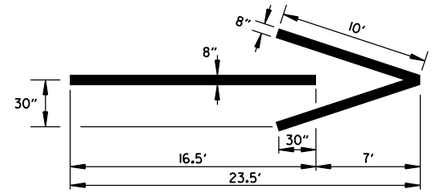

THERMOPLASTIC WRONG-WAY
PAVEMENT ARROWS

NOTE: THERMOPLASTIC WRONG-WAY PAVEMENT ARROWS TO BE PAID FOR AS THERMOPLASTIC PAVEMENT MARKING (ARROWS).

LEGEND

DELINEATOR

NOTE: WHEN UNIFORM SPACING IS INTERRUPTED BY ROADSIDE OBSTACLES, DELINEATORS ADJACENT TO THE ROADSIDE OBSTACLES MAY BE RELOCATED IN EITHER DIRECTION FOR A DISTANCE NOT EXCEEDING ONE QUARTER OF THE UNIFORM SPACING OR MAY BE ELIMINATED AS DIRECTED BY THE ENGINEER.

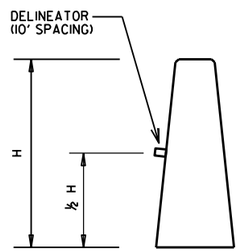

PERMANENT BARRIER WALL
DELINEATOR DETAIL

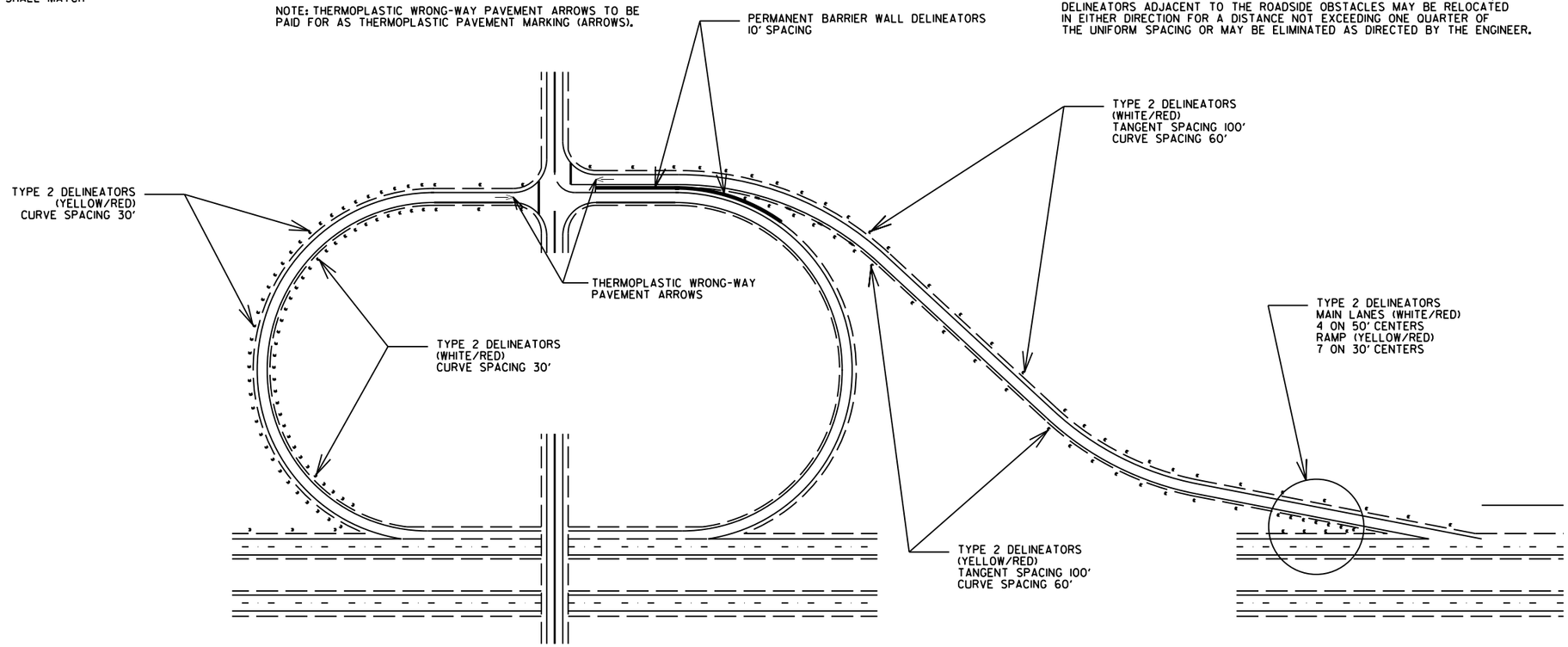

TYPICAL EXIT RAMP DELINEATOR PLACEMENT

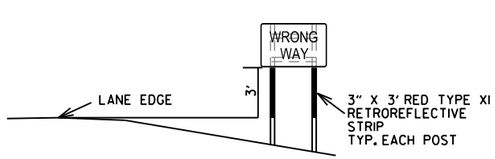

WRONG-WAY SIGN ASSEMBLY DETAILS

NOTES
1. WRONG-WAY SIGNS MAY BE MOUNTED ON THE BACK SIDE OF EXISTING SIGN SUPPORTS WHERE POSSIBLE.
2. WRONG-WAY SIGNS ARE NORMALLY GATED, BUT MAY BE OFFSET WHEN BARRIER WALLS ARE PRESENT ON THE INSIDE SHOULDER. IN SUCH CASES, THE SIGN ON THE INSIDE SHOULDER SIDE MAY BE LOCATED PAST THE END OF THE BARRIER WALL. IN RARE CASES WHERE THE BARRIER WALL EXTENDS TO OR NEAR THE MAIN LANES, BOTH SIGNS MAY BE LOCATED ON THE OUTSIDE SHOULDER SIDE OF THE RAMP, WITH APPROXIMATELY 300' SPACING BETWEEN THE SIGNS.

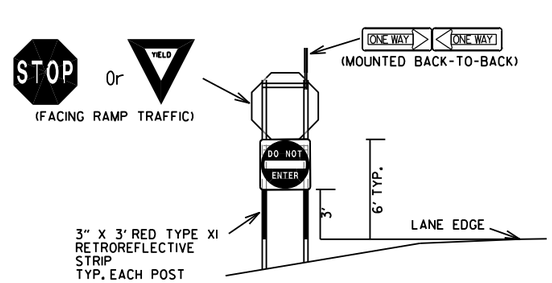

RAMP INTERSECTION SIGN ASSEMBLY DETAILS

THE DELINEATORS SHALL BE PLACED AT A 4' HEIGHT MEASURED FROM THE PAVEMENT EDGE TO THE BOTTOM OF THE DELINEATOR. DELINEATOR POSTS SHALL BE PLACED 2 TO 8 FT. OUTSIDE THE OUTER EDGE OF THE SHOULDER, OR IF APPROPRIATE, IN LINE WITH THE ROADSIDE BARRIER THAT IS 8 FT. OR LESS OUTSIDE THE OUTER EDGE OF THE SHOULDER.

DELINEATOR SPACING IN CURVES SHALL BE REDUCED TO 30' WHEN THE RAMP ADVISORY SPEED IS 30 MPH OR LESS.

IF MULTIPLE LANES EXIST AT THE RAMP TERMINAL, THE THERMOPLASTIC WRONG-WAY ARROW SHALL BE PLACED AS CLOSE TO THE RAMP TERMINAL TURNOUT AS POSSIBLE.

DATE	REVISION	FILMED
11-16-17	ADDED NOTES	
06-01-17	RE-DRAWN	
09-12-13	ISSUED AS STANDARD DRAWING	

ARKANSAS STATE HIGHWAY COMMISSION

TYPICAL EXIT RAMP SIGN AND DELINEATOR DETAILS

STANDARD DRAWING SHS-8

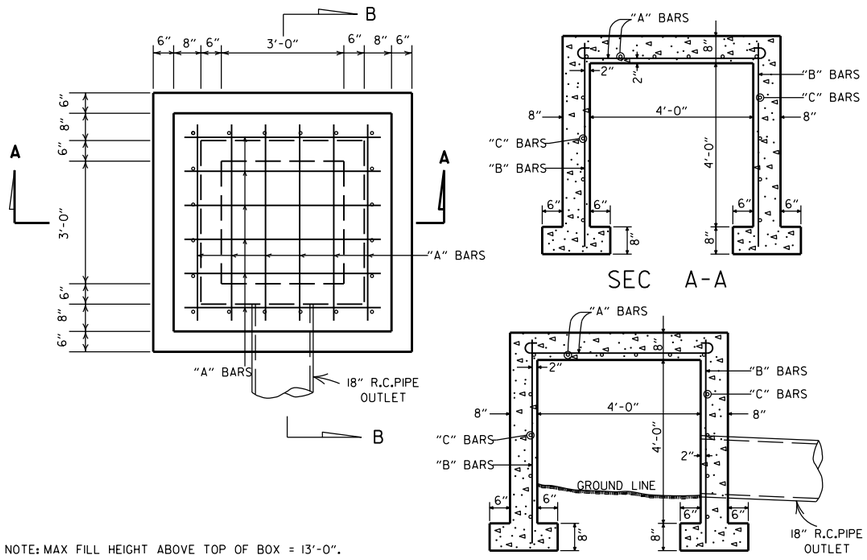

NOTE: MAX FILL HEIGHT ABOVE TOP OF BOX = 13'-0".

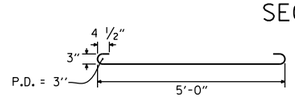

STEEL SCHEDULE

BARS	NUMBER	LENGTH	SPACING
"A"	12	6'-0"	10"
"B"	20	5'-0"	10 1/2"
"C"	16	5'-0"	12"

ALL STEEL TO BE #4 BARS

QUANTITIES

CONCRETE 3.31 CU. YDS.
REINFORCING STEEL 168 LB.

GENERAL NOTE:

THE PAY ITEMS FOR REINFORCED CONCRETE SPRING BOXES SHALL BE FOR THE QUANTITIES OF CONCRETE OF THE CLASS SPECIFIED, REINFORCING STEEL, EXCAVATION FOR STRUCTURES AND 18" R.C. PIPE CULVERT.

REINFORCED CONCRETE SPRING BOX

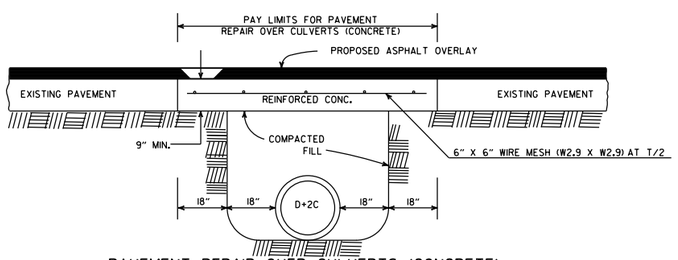

PAVEMENT REPAIR OVER CULVERTS (CONCRETE)

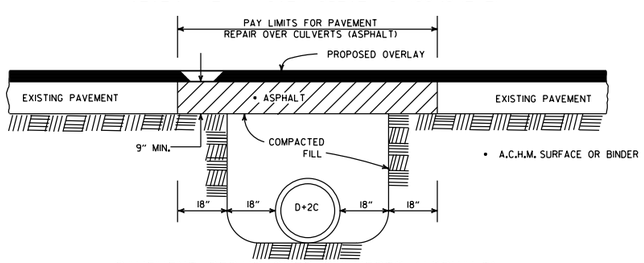

PAVEMENT REPAIR OVER CULVERTS (ASPHALT)

DETAIL SHOWING REPAIR OF EXISTING PAVEMENT AT CULVERT INSTALLATIONS

* A 2" MIN. HIGH CURB IS REQUIRED WHEN CONCRETE WALK IS ADJACENT TO THE HAND RAILING. PAYMENT FOR CURB SHALL BE CONSIDERED INCLUDED IN THE PRICE BID FOR CONCRETE WALKS.

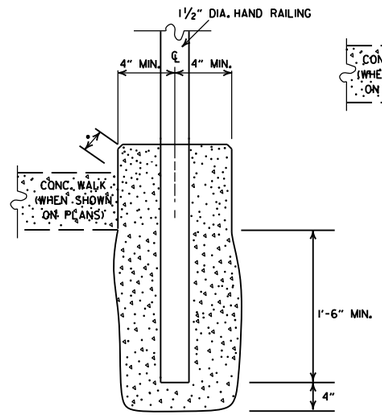

DETAIL OF HAND RAILING SET IN CONCRETE

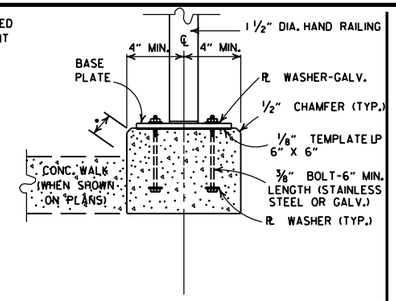

POST CONNECTION TO WALL

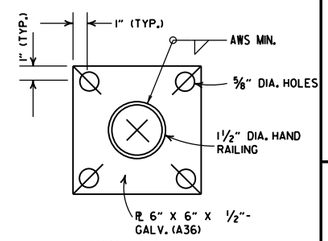

BASE PLATE

POST CONNECTION DETAILS

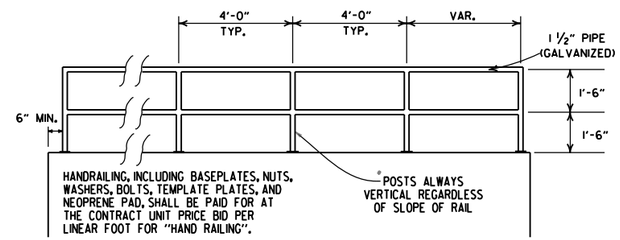

HAND RAILING SHALL CONFORM TO SECTION 633.

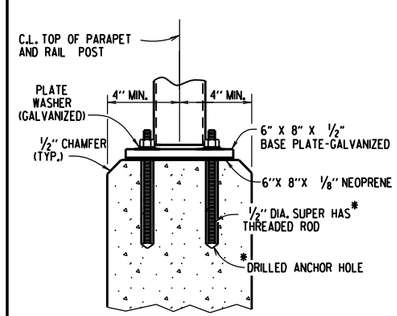

*HILTI HIT RE 500 EPOXY ADHESIVE ANCHOR SYSTEM WITH 4 1/2" EMBEDMENT OR APPROVED EQUAL.

THE ADHESIVE ANCHOR SYSTEM SHALL BE INSTALLED IN ACCORDANCE WITH MANUFACTURER'S RECOMMENDATIONS.

POST CONNECTION TO WALL

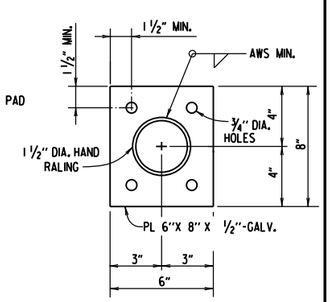

BASE PLATE

DETAILS OF ALTERNATE POST ANCHOR SYSTEM
(EPOXY ADHESIVE ANCHORS)

HAND RAILING DETAILS

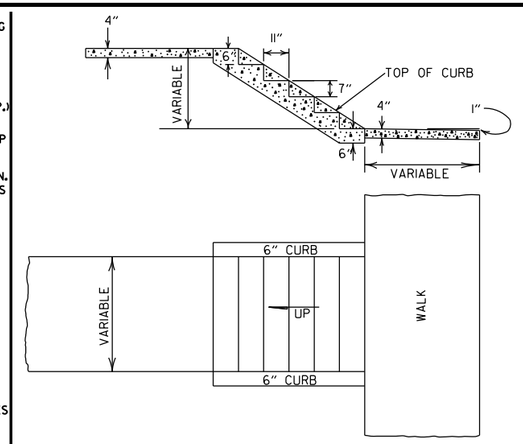

GENERAL NOTES

1. RISE AND TREAD DIMENSIONS OF STEPS MAY BE VARIED AS DIRECTED BY THE ENGINEER, HOWEVER, TREAD WIDTHS SHALL BE 11" MIN. ALL STEPS IN A FLIGHT SHALL HAVE CONSISTENT TREAD & RISER DIMENSIONS.
2. 1" TRANSVERSE EXPANSION JOINTS SHALL BE PLACED IN CONCRETE WALKS AT 45' INTERVALS.

DETAILS OF CONCRETE STEPS & WALKS

DATE	REVISION	DATE FILMED
10-25-18	REVISED DETAIL SHOWING REPAIR OF EXISTING PAVEMENT AT CULVERT INSTALLATIONS	
9-12-13	REVISED REINFORCED CONCRETE SPRING BOX	
7-26-12	REMOVED RETAINING WALL DETAILS & REVISED HAND RAILING DETAILS	
4-17-08	REV. JOINT & FOOTING STEP DETAILS	
11-29-07	REVISED RETAINING WALL DRAINAGE	
5-25-06	REVISED PVMT REPAIR OVER CULVERTS (CONC); REVISED REINFORCED CONC SPRING BOX	
10-9-03	REVISED PIPE RAILING DETAILS TO HAND RAILING DETAILS	
4-10-03	REVISED RETAINING WALL DRAWING	
8-22-02	ADDED HAND RAILING DETAIL	
11-16-01	REVISED PVMT REPAIR OVER CULVERTS (CONC); CORRECTED SPELLING IN GENERAL NOTES	
11-18-98	ADDED GENERAL NOTES TO CONCRETE STEPS & WALKS	
7-02-98	ENLARGED PIPE	
4-03-97	ADDED NOTE TO STEEL BAR SCHED.	
10-18-96	CORRECTED SPELLING	
4-26-96	ADD WEEP HOLE;REV. JOINT SPACING IN RET. WALL	
6-2-94	CHANGED CONST. TO CONTRACTION JOINT	
10-1-92	CHANGED MESH FABRIC TO WIRE MESH	10-1-92
8-15-91	DELETED HDWL MODIFICATION DETAIL	8-15-91
11-8-90	DELETED COLD MIX FROM CULV'T. REPAIR	11-8-90
11-30-89	REV. RETAINING WALL STEEL SCHEDULE	11-30-89
11-17-88	V. BARS BEHIND ARROW	665-11-17-88
7-15-88	REV. PAVEMENT REPAIR ADDED HDWL. MODS, DEL. PIPE UNDERDRAINS	649-7-15-88
11-1-84	REV. TRENCH FOR PIPE UNDERDRAIN	510-11-1-84
1-4-83	ELIMINATED CONC. CLASS & ADDED CHAMFER NOTE	682-1-4-83
3-2-81	SPELLING OF "UNDERDRAIN"	721-3-2-81
4-20-79	REV. UNDERDRAIN DET& PAVEMENT REPAIR	674-4-20-79
2-2-76	12"MIN. GRAN. MAT'L. OVER PIPE	919-2-2-76
4-10-75	REM. SPECS. FOR GRAN. MAT'L.	568-4-10-75-853
5-22-74	GRANULAR MAT'L. TO BE SB-3	567-5-22-74-740
10-2-72	REVISED AND REDRAWN	564-10-16-72

ARKANSAS STATE HIGHWAY COMMISSION

DETAILS OF SPECIAL ITEMS

STANDARD DRAWING SI - 1

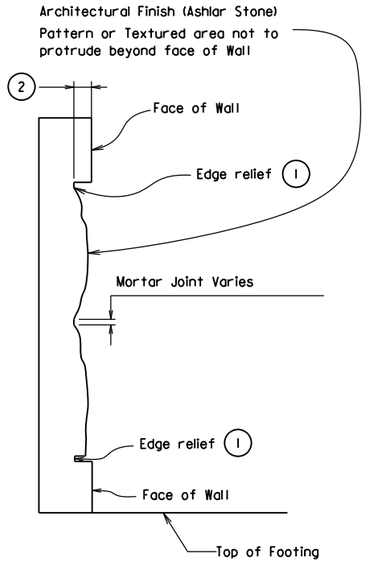

ARCHITECTURAL FINISH DETAILS

N.T.S.

1. Provide edge relief around perimeter of Texture. Edge relief dimensions shall match manufacturers edge distance.
2. Depth of Ashlar Stone pattern approx. 1 5/8". See SP "Architectural Finish".

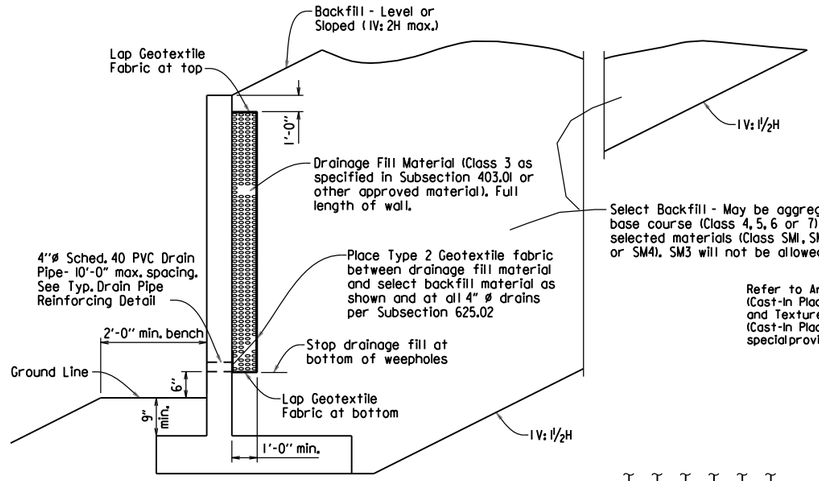

TYPICAL DRAINAGE & BACKFILL DETAILS

N.T.S

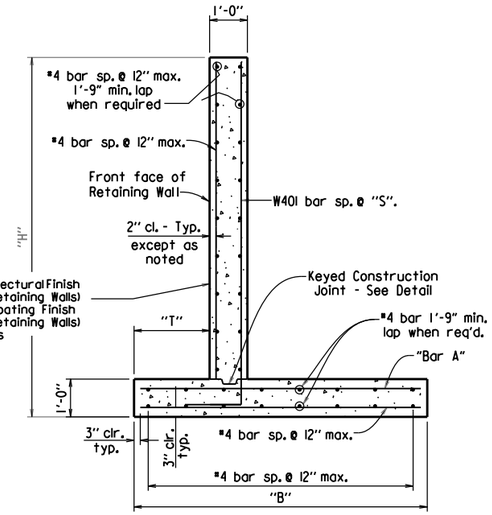

TYPICAL SECTION

N.T.S

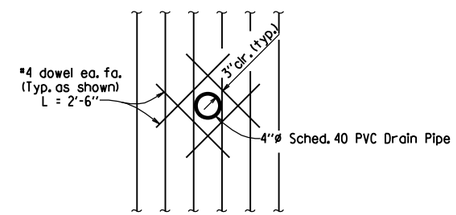

TYPICAL DRAIN PIPE REINFORCING DETAIL

N.T.S

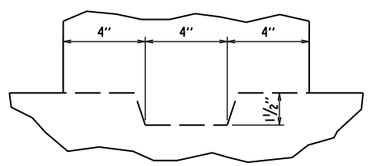

KEYED CONSTRUCTION JOINT DETAIL

N.T.S

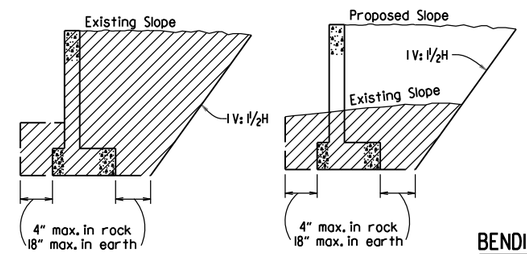

NOTE: Hatched area denotes maximum limits of pay excavation.

DETAILS OF EXCAVATION

N.T.S

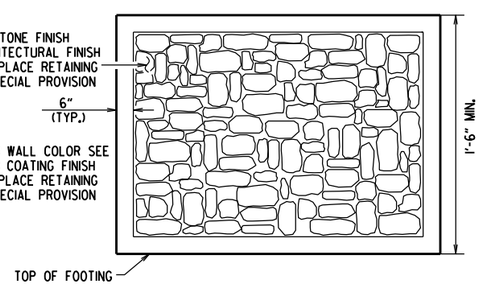

ASHLAR STONE FINISH DETAIL

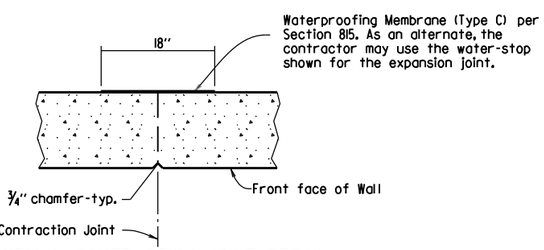

TYPICAL CONTRACTION JOINT DETAIL

N.T.S.

Note: 20'-0" Max. Spacing between Contraction Joints. Horizontal reinforcement shall be continuous through Contraction joints.

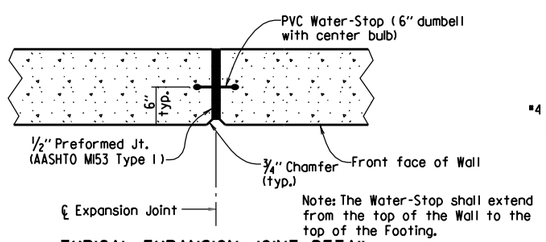

Note: The Water-Stop shall extend from the top of the Wall to the top of the Footing.

TYPICAL EXPANSION JOINT DETAIL

N.T.S.

Note: 60'-0" Max. Spacing between Expansion Joints. Horizontal reinforcing shall stop 2" from ℄ Expansion Joint.

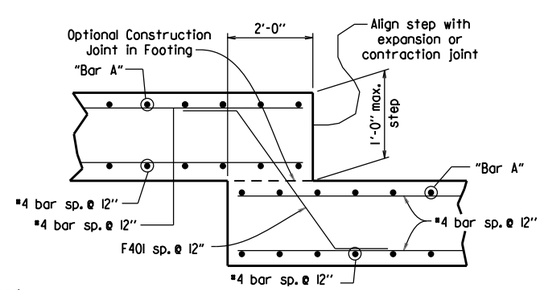

FOOTING STEP DETAIL

N.T.S.

NOTES:

Wall pattern shall be applied to the exposed surfaces of wall in accordance with SP "Architectural Finish (Cast-in Place Retaining Walls)" and as shown in the plans. Care shall be taken with form liner handling and installation to ensure aesthetic quality of the wall texturing is maintained. Where form liner panels require modification to conform to the location, dimensions and lines shown in the plans, the Contractor shall provide edge relief matching that of the unaltered form liner. Payment for wall texturing shall be in accordance with SP "Architectural Finish (Cast-in Place Retaining Walls)".

No adjustments will be made in concrete volume due to the use of "Architectural Finish". Class "S" Concrete shall be measured in accordance with Subsection 802.24(a). Care shall be taken in placing concrete to avoid segregation and to eliminate flow lines.

Class 3 Textured Coating Finish shall be applied to wall surfaces as specified in SP "Textured Coating Finish (Cast-in Place Retaining Walls)" and in accordance with Subsection 802.19(b)(3).

GENERAL NOTES

CONSTRUCTION SPECIFICATIONS: Arkansas Department of Transportation Standard Specifications for Highway Construction (Current Edition) with applicable supplemental specifications and special provisions. Unless otherwise noted in the plans, Section and Subsection refer to the Standard Construction Specifications.

DESIGN SPECIFICATIONS: AASHTO LRFD Bridge Design Specifications, Sixth Edition (2012).

LIVE LOAD: Live Load Surcharge is not included in the design of these walls. Vehicular Live Load shall not be allowed within a distance equal to one-half the height of the wall.

CONCRETE: Concrete shall be poured in the dry and all exposed corners to be chamfered ½". All concrete shall be Class S with a minimum 28 day compressive strength f'c = 3,500 psi. A Class 2 Surface finish shall be used on all surfaces of the concrete unless otherwise noted. Refer to Architectural Finish (Cast-in Place Retaining Walls) and Textured Coating Finish (Cast-in Place Retaining Walls) special provisions.

REINFORCING STEEL: All reinforcing steel shall conform to AASHTO M31 or M53, Grade 60.

Foundations for footings shall be prepared in accordance with subsection 801.04. Backfill for retaining walls shall be in accordance with subsection 801.08.

Waterproof Membrane (Type C), waterstops, preformed joints, weep holes & geotextile fabric shall not be paid for directly, but shall be considered subsidiary to Class S Concrete.

Drainage fill material (Class 3) and select backfill shall be measured and paid for as Compacted Embankment.

These details are not intended for use along streams or ditches without consideration for scour.

TABLE OF RETAINING WALL VARIABLES (SLOPED BACKFILL) (1V: 2H MAX.)

"H"	"T"	"B"	"S"	"Bar A" Size @ Spacing
3'-0"	9"	2'-6"	12"	#4 @ 12"
4'-0"	9"	3'-6"	12"	#4 @ 12"
5'-0"	9"	4'-6"	12"	#4 @ 12"
6'-0"	9"	5'-6"	12"	#4 @ 6"
7'-0"	9"	6'-6"	12"	#5 @ 6½"
8'-0"	1'-6"	8'-0"	7½"	#6 @ 6"
9'-0"	1'-11"	9'-6"	5"	#8 @ 6"

TABLE OF RETAINING WALL VARIABLES (LEVEL BACKFILL)

"H"	"T"	"B"	"S"	"Bar A" Size @ Spacing
3'-0"	9"	2'-6"	12"	#4 @ 12"
4'-0"	9"	3'-6"	12"	#4 @ 12"
5'-0"	9"	4'-0"	12"	#4 @ 12"
6'-0"	9"	4'-6"	12"	#4 @ 12"
7'-0"	9"	5'-6"	12"	#4 @ 10"
8'-0"	9"	6'-0"	12"	#5 @ 10"
9'-0"	1'-0"	7'-0"	12"	#5 @ 6½"

BENDING DIAGRAMS

MARK	A	B	P.D.
W401	8"	"H" - 6"	3"
F401	1'-6"	1'-10"	2½"

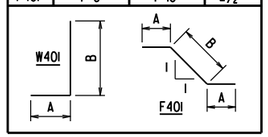

Dimensions are out to out of bars.

SEISMIC ZONE: These walls have been designed for the following site adjusted peak ground accelerations (A_S):
Level Backfill - $A_S \leq .40g$
Sloped Backfill (1V: 2H max.) - $A_S \leq .30g$

DATE	REVISION	DATE FILMED
5-14-20	ADDED ASHLAR STONE FINISH DETIAL AND NOTES. REVISED TYP. SECTION AND GEN. NOTES.	
5-12-16	REVISED SLOPES FOR SELECT BACKFILL	
2-27-14	REVISED GENERAL NOTES	
7-26-12	DRAWING ISSUED	

ARKANSAS STATE HIGHWAY COMMISSION

REINFORCED CONCRETE RETAINING WALL (WITHOUT LIVE LOAD SURCHARGE)

STANDARD DRAWING SI - 2

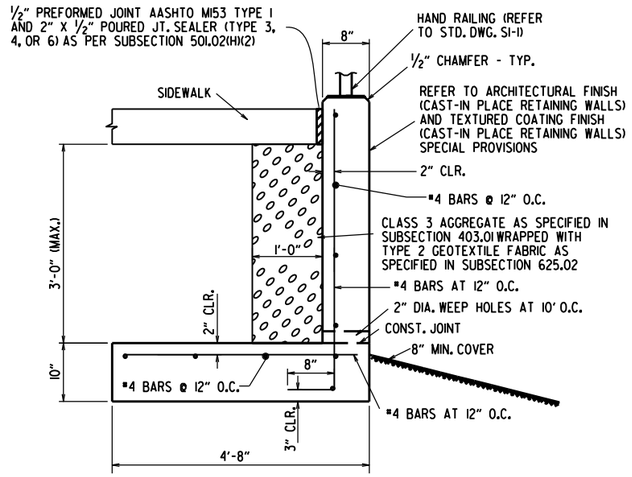

CONCRETE WALK (TYPE SPECIAL) DETAIL MAX HEIGHT 3'-0"

N.T.S.

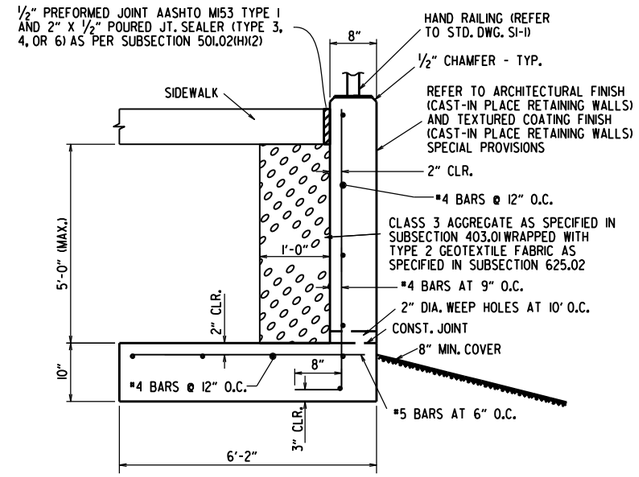

CONCRETE WALK (TYPE SPECIAL) DETAIL MAX HEIGHT 5'-0"

N.T.S.

GENERAL NOTES

CONSTRUCTION SPECIFICATIONS: ARKANSAS DEPARTMENT OF TRANSPORTATION STANDARD SPECIFICATIONS FOR HIGHWAY CONSTRUCTION (CURRENT EDITION) WITH APPLICABLE SUPPLEMENTAL SPECIFICATIONS AND SPECIAL PROVISIONS. UNLESS OTHERWISE NOTED IN THE PLANS, SECTION AND SUBSECTION REFER TO THE STANDARD CONSTRUCTION SPECIFICATIONS.

DESIGN SPECIFICATIONS: AASHTO LRFD BRIDGE DESIGN SPECIFICATIONS, SIXTH EDITION (2012).

LIVE LOAD: LIVE LOAD SURCHARGE IS NOT INCLUDED IN THE DESIGN OF THESE WALLS. VEHICULAR LIVE LOAD SHALL NOT BE ALLOWED WITHIN A DISTANCE EQUAL TO ONE-HALF THE HEIGHT OF THE WALL.

CONCRETE: CONCRETE SHALL BE POURED IN THE DRY AND ALL EXPOSED CORNERS TO BE CHAMFERED ½". ALL CONCRETE SHALL BE CLASS S WITH A MINIMUM 28 DAY COMPRESSIVE STRENGTH F'C = 3,500 PSI. A CLASS 2 SURFACE FINISH SHALL BE USED ON ALL SURFACES OF THE CONCRETE UNLESS OTHERWISE NOTED. REFER TO ARCHITECTURAL FINISH (CAST-IN PLACE RETAINING WALLS) AND TEXTURED COATING FINISH (CAST-IN PLACE RETAINING WALLS) SPECIAL PROVISIONS.

REINFORCING STEEL: ALL REINFORCING STEEL SHALL CONFORM TO AASHTO M31 OR M53, GRADE 60.

FOUNDATIONS FOR FOOTINGS SHALL BE PREPARED IN ACCORDANCE WITH SUBSECTION 801.04. BACKFILL FOR RETAINING WALLS SHALL BE IN ACCORDANCE WITH SUBSECTION 801.08.

WATERPROOF MEMBRANE (TYPE C), WATERSTOPS, PREFORMED JOINTS, PREFORMED JOINT FILLER, WEEP HOLES, CLASS 3 AGGREGATE, REINF. STEEL, CONCRETE, & GEOTEXTILE FABRIC SHALL NOT BE PAID FOR DIRECTLY, BUT SHALL BE CONSIDERED SUBSIDIARY TO CONCRETE WALKS (TYPE SPECIAL).

JOINTS IN THE WALL SHALL MATCH TYPE AND SPACING OF THE JOINTS IN THE WALK.

THESE DETAILS ARE NOT INTENDED FOR USE ALONG STREAMS OR DITCHES WITHOUT CONSIDERATION FOR SCOUR.

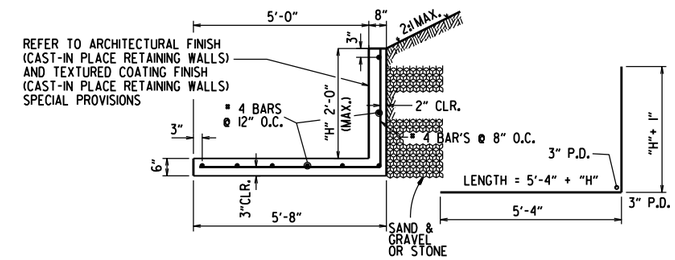

CONCRETE WALK (TYPE SPECIAL) DETAILS MAX HEIGHT 2'-0"

N.T.S.

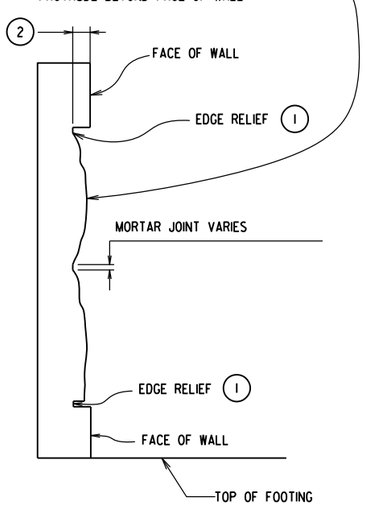

ARCHITECTURAL FINISH DETAILS

N.T.S.

1. PROVIDE EDGE RELIEF AROUND PERIMETER OF TEXTURE. EDGE RELIEF DIMENSIONS SHALL MATCH MANUFACTURERS EDGE DISTANCE.
2. DEPTH OF ASHLAR STONE PATTERN APPROX. 1⅝". SEE SP "ARCHITECTURAL FINISH (CAST-IN PLACE RETAINING WALLS)".

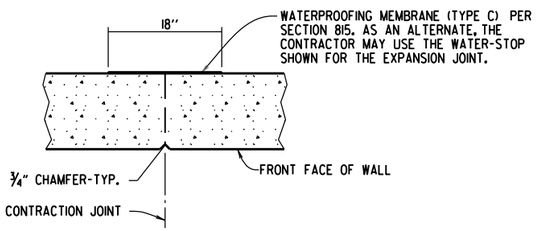

TYPICAL CONTRACTION JOINT DETAIL

N.T.S.

NOTE: 20'-0" MAX. SPACING BETWEEN CONTRACTION JOINTS. HORIZONTAL REINFORCEMENT SHALL BE CONTINUOUS THROUGH CONTRACTION JOINTS.

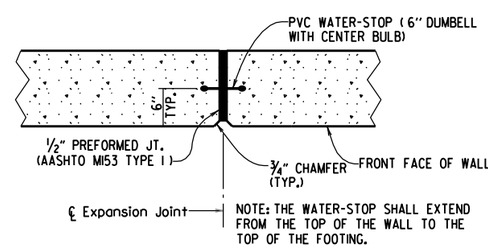

TYPICAL EXPANSION JOINT DETAIL

N.T.S.

NOTE: 60'-0" MAX. SPACING BETWEEN EXPANSION JOINTS. HORIZONTAL REINFORCING SHALL STOP 2" FROM ℄ EXPANSION JOINT.

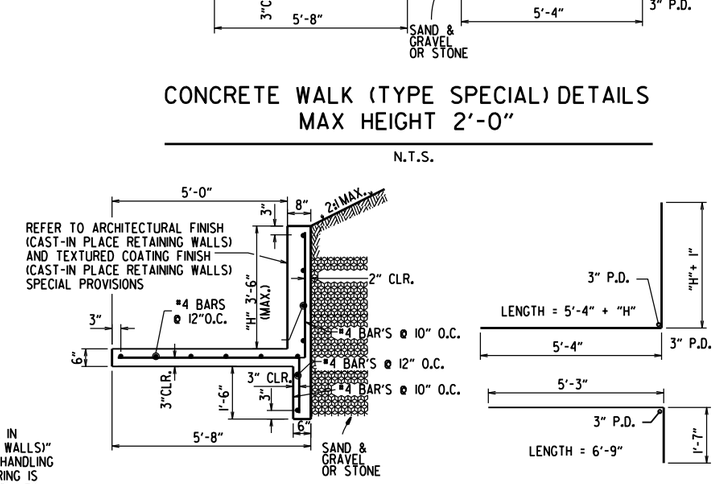

CONCRETE WALK (TYPE SPECIAL) DETAILS MAX HEIGHT 3'-6"

N.T.S.

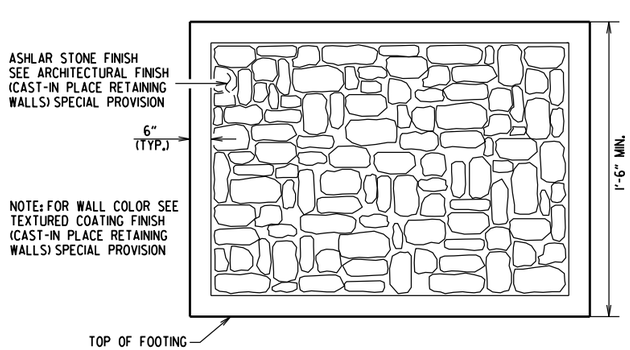

ASHLAR STONE FINISH DETAIL

NOTES:

WALL PATTERN SHALL BE APPLIED TO THE EXPOSED SURFACES OF WALL IN ACCORDANCE WITH SP "ARCHITECTURAL FINISH (CAST-IN PLACE RETAINING WALLS)" AND AS SHOWN IN THE PLANS. CARE SHALL BE TAKEN WITH FORM LINER HANDLING AND INSTALLATION TO ENSURE AESTHETIC QUALITY OF THE WALL TEXTURING IS MAINTAINED. WHERE FORM LINER PANELS REQUIRE MODIFICATION TO CONFORM TO THE LOCATION, DIMENSIONS AND LINES SHOWN IN THE PLANS, THE CONTRACTOR SHALL PROVIDE EDGE RELIEF MATCHING THAT OF THE UNALTERED FORM LINER. PAYMENT FOR WALL TEXTURING SHALL BE IN ACCORDANCE WITH SP "ARCHITECTURAL FINISH (CAST-IN PLACE RETAINING WALLS)".

NO ADJUSTMENTS WILL BE MADE IN CONCRETE VOLUME DUE TO THE USE OF "ARCHITECTURAL FINISH". CLASS "S" CONCRETE SHALL BE MEASURED IN ACCORDANCE WITH SUBSECTION 802.24(A). CARE SHALL BE TAKEN IN PLACING CONCRETE TO AVOID SEGREGATION AND TO ELIMINATE FLOW LINES.

CLASS 3 TEXTURED COATING FINISH SHALL BE APPLIED TO WALL SURFACES AS SPECIFIED IN SP "TEXTURED COATING FINISH (CAST-IN PLACE RETAINING WALLS)" AND IN ACCORDANCE WITH SUBSECTION 802.19(B)(3).

DATE	REVISION	DATE FILMED
11-05-20	REVISED GENERAL NOTES	
5-14-20	DRAWING ISSUED	

ARKANSAS STATE HIGHWAY COMMISSION

CONCRETE WALK (TYPE SPECIAL)

STANDARD DRAWING SI - 3

R1-1

STANDARD 30"X30"
EXPRESSWAY 36"X36"
SPECIAL 48"X48"

R1-2

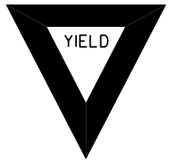

STD. 36"X36"X36"
EXPWY. 48"X48"X48"
FWY. 60"X60"X60"

R2-1

STD. 24"X30"
EXPWY. 36"X48"
FWY. 48"X60"

W3-5

STD. 36"X36"
EXPWY. 48"X48"
FWY. 48"X48"

W3-5a

STD. 36"X36"
EXPWY. 48"X48"
FWY. 48"X48"

R4-1

STD. 24"X30"
EXPWY. 36"X48"
FWY. 48"X60"

R4-2

STD. 24"X30"
EXPWY. 36"X48"
FWY. 48"X60"

R5-1

STD. 30"X30"
EXPWY. 36"X36"
SPECIAL 48"X48"

R11-2

48"X30"

R11-3A

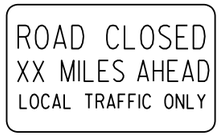

60"X30"

R11-4

60"X30"

W21-5a

STD. 36"X36"
FWY. 48"X48"

W1-1

STD. 36"X36"
FWY. 48"X48"

W1-2

STD. 36"X36"
FWY. 48"X48"

W1-3

STD. 48"X48"

W1-4

STD. 48"X48"

W1-6

STD. 48"X24"
SPECIAL 60"X30"

W1-8

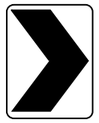

STD. 18"X24"
SPECIAL 24"X30"
EXPWY. 30"X36"
FWY. 36"X48"

W3-1

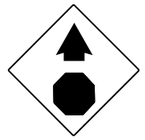

STD. 36"X36"
SPECIAL 48"X48"

W3-2

STD. 36"X36"
SPECIAL 48"X48"

W4-2

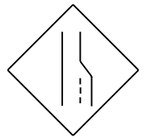

STD. 36"X36"
FWY. 48"X48"

W5-1

STD. 36"X36"
SPECIAL 48"X48"

W6-3

EXPWY. 36"X36"
SPECIAL 48"X48"

W8-7

EXPWY. 36"X36"
FWY. 48"X48"

W9-2

STD. 36"X36"
FWY. 48"X48"

W13-1

STD. 24"X24"

W20-1

STD. 48"X48"

W20-2

STD. 48"X48"

W20-3

STD. 48"X48"

W20-4

STD. 48"X48"

W20-5

STD. 48"X48"

W20-7a

STD. 36"X36"
FWY. 48"X48"

W21-2

STD. 30"X30"
SPECIAL 36"X36"

W21-5

STD. 30"X30"
SPECIAL 36"X36"

W24-1

STD. 36"X36"

W1-4b

STD. 48"X48"

R56-1

STD. 18"X18"

W8-11

STD. 36"X36"
FWY. 48"X48"

W8-9

STD. 36"X36"
FWY. 48"X48"

G20-1

60"X24"

G20-2

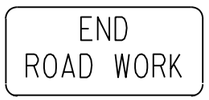

48"X24"

OM-3L OM-3R

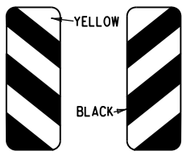

12"X36"

M4-9

STD. 30"X24"
SPECIAL 48"X36"
SPECIAL 60"X48"

M4-10

48"X18"

R55-1

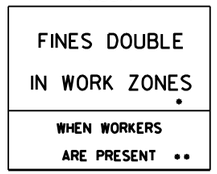

36"X60"

• USE 6" C LETTERS
•• USE 4" D LETTERS

ADVANCE DISTANCES
(XXXX)

500 FT	½ MILE
1000 FT	¾ MILE
1500 FT	1 MILE AHEAD

GENERAL NOTES:

1. ALL TRAFFIC CONTROL DEVICES USED ON ROAD CONSTRUCTION SHALL CONFORM TO THE MANUAL ON UNIFORM TRAFFIC CONTROL DEVICES, LATEST EDITION, AND TO THE STANDARD HIGHWAY SIGNS, LATEST EDITION, OR AS APPROVED BY THE FEDERAL HIGHWAY ADMINISTRATION.

2. TRAFFIC CONTROL DEVICES SHALL BE SET UP JUST BEFORE THE START OF CONSTRUCTION OPERATIONS AND SHALL BE PROPERLY MAINTAINED DURING THE TIME SUCH CONDITIONS EXIST. THEY SHALL REMAIN IN PLACE ONLY AS LONG AS NEEDED AND REMOVED THEREAFTER.

3. EXISTING SIGNS AND CONSTRUCTION SIGNS SHALL BE KEPT IN PROPER POSITION, AND BE CLEAN AND LEGIBLE AT ALL TIMES. SIGNS THAT DO NOT APPLY TO EXISTING CONDITIONS SHALL BE REMOVED. SIGNS THAT ARE DAMAGED, DEFACED, OR THAT ACCUMULATE DIRT DURING CONSTRUCTION SHALL BE CLEANED, REPAIRED, OR REPLACED.

• 4. SIGNS ARE USUALLY MOUNTED ON A SINGLE POST, ALTHOUGH THOSE WIDER THAN 36" OR LARGER THAN 10 SQ. FT. SHALL BE MOUNTED ON TWO POSTS OR ABOVE A TYPE III BARRICADE.

• 5. SIGN POSTS DIRECT BURIED IN SOIL SHALL BE 2 LB. MINIMUM CHANNEL POST OR 4"x4" WOOD POSTS. CHANNEL POSTS SHALL BE PAINTED GREEN. WOOD POSTS SHALL BE PAINTED WHITE. ALL POSTS SHALL BE NEATLY CONSTRUCTED, AND SHALL BE REPLUMBED, CLEANED, OR REPAIRED AS NEEDED FOR THE DURATION OF THE JOB. THERE SHALL NOT BE MORE THAN 2 POSTS IN A 7' PATH FOR WOOD OR CHANNEL POSTS. ANY CHANNEL POST SPLICE SHALL BE IN ACCORDANCE WITH STANDARD DRAWING TC-3.

6. POST MOUNTED SIGNS IN RURAL AREAS SHALL BE CONSTRUCTED WITH THE NEAR EDGE OF THE SIGN FROM 6 TO 12 FEET FROM THE PAVEMENT EDGE. SIGNS IN URBAN AREAS AND BARRICADE MOUNTED SIGNS SHALL BE MOUNTED A MINIMUM OF 2 FEET FROM THE PAVEMENT EDGE.

7. ALL POST AND BARRICADE MOUNTED SIGNS MOUNTED IN URBAN AREAS SHALL BE MOUNTED A MINIMUM DISTANCE OF 7' FROM THE BOTTOM OF THE SIGN TO THE ROADWAY SURFACE. ALL POST AND BARRICADE MOUNTED SIGNS MOUNTED IN RURAL AREAS SHALL BE MOUNTED A MINIMUM DISTANCE OF 7' FROM THE BOTTOM OF THE SIGN TO THE ROADWAY SURFACE, EXCEPT A MINIMUM OF 6' SHALL BE USED WHEN MOUNTING AN ADVISORY SIGN BELOW A WARNING SIGN. TEMPORARY SIGNS MAY BE MOUNTED ON PORTABLE SUPPORTS FOR INTERMEDIATE TERM STATIONARY WORK CONDITIONS. THE SIGNS MINIMUM MOUNTING HEIGHT SHALL BE 5'. RETROREFLECTIVE DEVICES SHALL BE USED. TEMPORARY SIGNS MAY BE MOUNTED ON PORTABLE SUPPORTS FOR SHORT-TERM, SHORT DURATION, AND MOBILE CONDITIONS. THEY SHALL BE NO LESS THAN ONE (1) FOOT ABOVE THE TRAVELED WAY. LONG-TERM STATIONARY SIGNS SHALL BE DIRECT BURIED IN SOIL, UNLESS CONDITIONS NECESSITATE THE USE OF PORTABLE SIGNS, OR AS APPROVED BY THE ENGINEER. CONCRETE PADS, CONCRETE OR ROCK BALLAST, OR OTHER SOLID MATERIALS SHALL NOT BE UTILIZED WITH PORTABLE SIGN SUPPORTS.

8. FLAGGERS SHALL USE REFLECTORIZED STOP-SLOW PADDLES. FLAGS MAY BE USED ONLY FOR EMERGENCY SITUATIONS.

9. MOST OF THE SIGNS SHOWN ARE ORIENTED TO THE RIGHT. HOWEVER, THIS DOES NOT PRECLUDE THE USE OF MIRROR IMAGES OF THESE SIGNS WHERE THE REVERSE ORIENTATION MIGHT BETTER CONVEY TO MOTORISTS THE PROPER DIRECTION OF MOVEMENT.

10. R55-1 SIGNS SHALL BE PLACED AT LEAST 1500' BUT NOT MORE THAN 1 MILE IN ADVANCE OF THE WORK ZONE. IF A SPEED LIMIT REDUCTION IS IN EFFECT, THE SIGN SHALL BE PLACED A MINIMUM OF 500' IN ADVANCE OF THE "REDUCED SPEED AHEAD" SIGN.

• NOTE: SUPPORTS FOR SIGNS, BARRICADES, AND VERTICAL PANELS THAT ARE DIFFERENT FROM THE REQUIREMENTS SHOWN IN NOTES 4 & 5, BUT MEET THE REQUIREMENTS OF MANUAL FOR ASSESSING SAFETY HARDWARE (MASH), WILL BE ACCEPTED. COMPLIANCE WITH THE REQUIREMENTS OF MANUAL FOR ASSESSING SAFETY HARDWARE (MASH) IS REQUIRED FOR ALL PROJECTS.

DATE	REVISION	FILMED
11-07-19	REVISED FOR MASH	
4-13-17	DELETED RSP-1 & ADDED W21-5a	
9-2-15	REVISED REDUCED SPEED LIMIT AHEAD SIGNS REVISED ROAD WORK NEXT XX MILES	
12-15-11	REVISED W24-1	
11-17-10	DELETED W8-9a & ADDED W8-9	
10-15-09	ADDED REFERENCE TO MASH & ADDED SIGN W24-1	
4-17-08	REVISED SIGN DESIGNATIONS	
11-18-04	REVISED NOTES	
10-9-03	REVISED NOTE 1	
11-16-01	REVISED NOTE 7	
9-28-00	REVISED NOTE	
11-18-98	ADDED NOTE	
6-26-97	REVISED NOTE 5	
4-03-97	REVISED NOTE 5	
10-18-96	ADDED CONTROLLED ACCESS HWY. SIGN & TO NOTE 7	
10-12-95	ADDED R55-1	
6-8-95	REVISED TO CORRECT SIGN ILLUSTRATIONS	6-8-95
2-2-95	REVISED PER PART VI, MUTCD SEPT. 3, 1993	
8-15-91	DRAWN AND PLACED IN USE	

ARKANSAS STATE HIGHWAY COMMISSION

STANDARD TRAFFIC CONTROLS FOR HIGHWAY CONSTRUCTION

STANDARD DRAWING TC-1

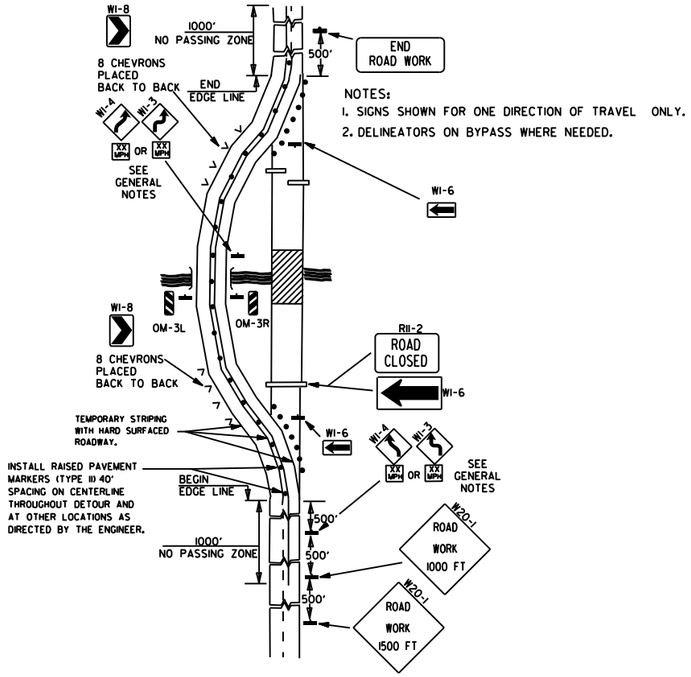

NOTES:
1. SIGNS SHOWN FOR ONE DIRECTION OF TRAVEL ONLY.
2. DELINEATORS ON BYPASS WHERE NEEDED.

(A) TYPICAL APPLICATION OF TRAFFIC CONTROL DEVICES ON A 2-LANE HIGHWAY WHERE THE ENTIRE ROADWAY IS CLOSED AND A BYPASS DETOUR IS PROVIDED.

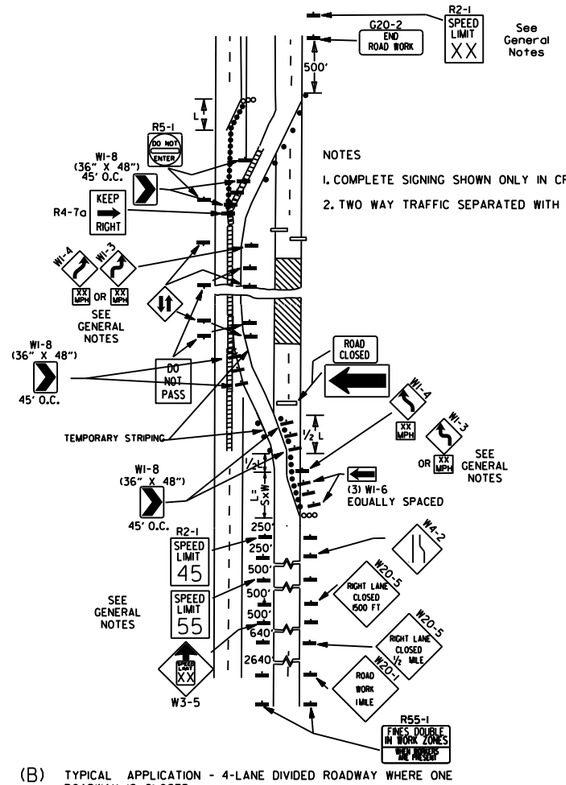

NOTES
1. COMPLETE SIGNING SHOWN ONLY IN CROSSOVER DIRECTION.
2. TWO WAY TRAFFIC SEPARATED WITH POSITIVE BARRIER.

(B) TYPICAL APPLICATION - 4-LANE DIVIDED ROADWAY WHERE ONE ROADWAY IS CLOSED.

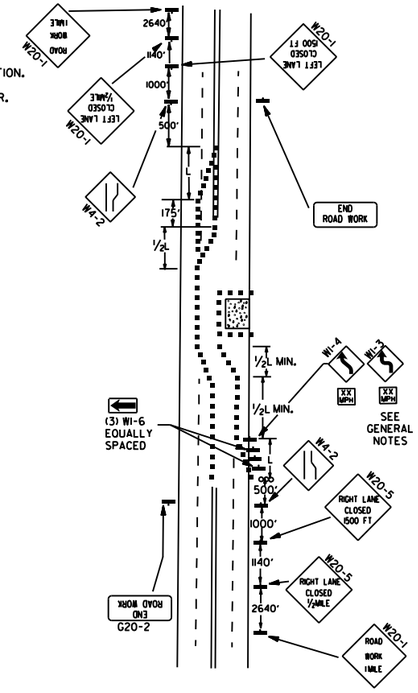

(C) TYPICAL APPLICATION - 4-LANE UNDIVIDED ROADWAY WHERE HALF OF THE ROADWAY IS CLOSED.

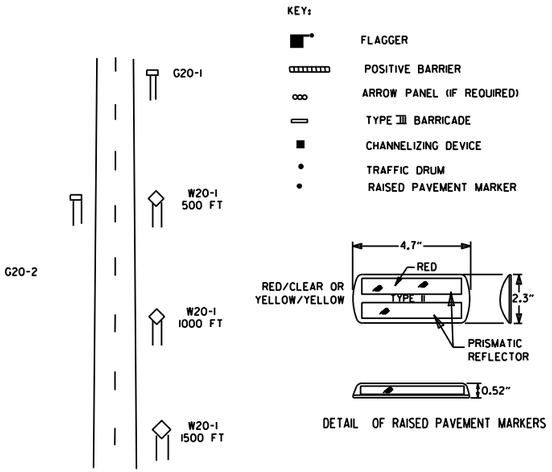

TYPICAL ADVANCE WARNING SIGN PLACEMENT

TAPER FORMULAE:

$L = SXW$ FOR SPEEDS OF 45MPH OR MORE.

$L = \frac{WS^2}{60}$ FOR SPEEDS OF 40MPH OR LESS.

WHERE:

L= MINIMUM LENGTH OF TAPER.

S= NUMERICAL VALUE OF POSTED SPEED LIMIT PRIOR TO WORK OR 85TH PERCENTILE SPEED.

W= WIDTH OF OFFSET.

GENERAL NOTES:

1. THE MAINTENANCE DIVISION SHALL CONDUCT A BALL BANK STUDY TO DETERMINE THE ADVISORY SPEED LIMIT PRIOR TO OPENING TO TRAFFIC. THE ADVISORY SPEED WILL BE POSTED ON W1-3 OR W1-4 CURVE WARNING SIGNS. USE W1-4 WHEN SPEED IS GREATER THAN 30MPH AND W1-3 WHEN 30MPH OR LESS
2. WHEN THE EXISTING SPEED LIMIT IS 55MPH AND THE PLANS REQUIRE A SPEED LIMIT OF 45MPH, THE R2-1(55) SHALL BE OMITTED AND THE W3-5 SHALL BE INSTALLED AT THAT LOCATION. ADDITIONAL R2-1 45MPH SPEED LIMIT SIGNS SHALL BE INSTALLED AT A MAXIMUM OF 1MILE INTERVALS. AT THE END OF THE WORK AREA A R2-1(XX) SHALL BE INSTALLED TO MATCH ORIGINAL SPEED LIMIT.
3. WHEN THE EXISTING SPEED LIMIT IS 65MPH AND THE PLANS REQUIRE A SPEED LIMIT OF 55MPH, THE R2-1(45) SHALL BE OMITTED. ADDITIONAL R2-1 55MPH SPEED LIMIT SIGNS SHALL BE INSTALLED AT A MAXIMUM OF 1MILE INTERVALS. AT THE END OF THE WORK AREA A R2-1(XX) SHALL BE INSTALLED TO MATCH ORIGINAL SPEED LIMIT.
4. THE MAXIMUM SPACING BETWEEN CHANNELIZING DEVICES IN A TAPER SHOULD BE APPROXIMATELY EQUAL IN FEET TO THE SPEED LIMIT. BEYOND THE TAPER, MAXIMUM SPACING SHALL BE TWO TIMES THE SPEED LIMIT, OR AS DIRECTED BY THE ENGINEER.
5. WARNING LIGHTS AND/OR FLAGS MAY BE MOUNTED TO SIGNS OR CHANNELIZING DEVICES AT NIGHT AS NEEDED.
6. PAVEMENT MARKINGS NO LONGER APPLICABLE WHICH MIGHT CREATE CONFUSION IN THE MINDS OF VEHICLE OPERATORS SHALL BE REMOVED OR OBLITERATED AS SOON AS PRACTICABLE.
7. TRAILER MOUNTED DEVICES SUCH AS ARROW PANELS AND PORTABLE CHANGEABLE MESSAGE SIGNS SHALL BE DELINEATED BY AFFIXING CONSPICUITY MATERIAL IN A CONTINUOUS LINE ON THE FACE OF THE TRAILER. WHEN PLACED ON OR ADJACENT TO THE SHOULDER AND NOT BEHIND A POSITIVE BARRIER, THESE DEVICES SHALL BE DELINEATED BY PLACING FIVE (5) TRAFFIC DRUMS, EQUALLY SPACED ALONG THE TRAFFIC SIDE OF THE DEVICE. PAYMENT FOR TRAFFIC DRUMS SHALL BE CONSIDERED INCLUDED IN THE PRICE BID FOR VARIOUS TRAILER MOUNTED DEVICES.
8. DIMENSIONS SHOWN FOR RAISED PAVEMENT MARKERS ARE TYPICAL. THE CONTRACTOR MAY SUBSTITUTE SIMILAR MARKERS WITH THE APPROVAL OF THE ENGINEER. REQUESTING APPROVAL FOR SIMILAR MARKERS MAY BE MADE BY REFERRING TO THE ARDOT QUALIFIED PRODUCTS LIST.
9. ALL TRAILER MOUNTED DEVICES SUCH AS ARROW PANELS AND PORTABLE CHANGEABLE MESSAGE SIGNS SHALL MEET THE REQUIREMENTS OF THE MANUAL FOR ASSESSING SAFETY HARDWARE (MASH).

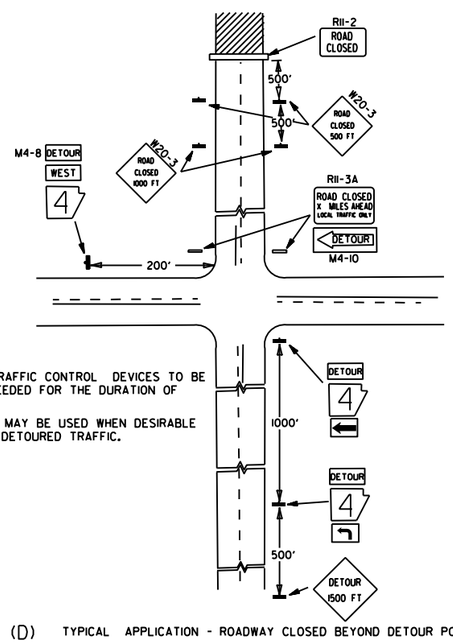

NOTES:
1. REGULATORY TRAFFIC CONTROL DEVICES TO BE MODIFIED AS NEEDED FOR THE DURATION OF THE DETOUR.
2. STREET NAMES MAY BE USED WHEN DESIRABLE FOR DIRECTING DETOURED TRAFFIC.

(D) TYPICAL APPLICATION - ROADWAY CLOSED BEYOND DETOUR POINT.

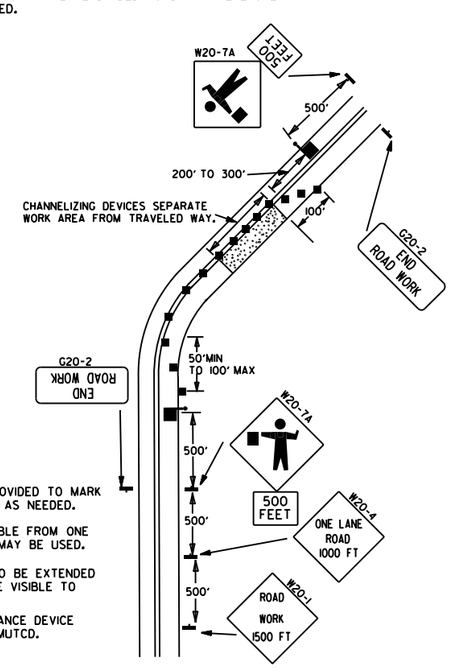

NOTES:
1. FLOOD LIGHTS SHOULD BE PROVIDED TO MARK FLAGGER STATIONS AT NIGHT AS NEEDED.
2. IF ENTIRE WORK AREA IS VISIBLE FROM ONE STATION, A SINGLE FLAGGER MAY BE USED.
3. CHANNELIZING DEVICES ARE TO BE EXTENDED TO A POINT WHERE THEY ARE VISIBLE TO APPROACHING TRAFFIC.
4. AUTOMATED FLAGGER ASSISTANCE DEVICE (AFAD) OPTIONAL. REFER TO MUTCD.

(E) TYPICAL APPLICATION OF TRAFFIC CONTROL DEVICES ON 2-LANE HIGHWAY WHERE ONE LANE IS CLOSED AND FLAGGING IS PROVIDED.

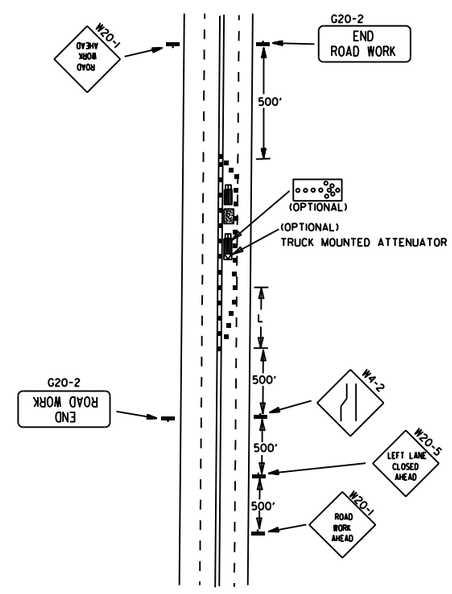

(F) TYPICAL APPLICATION - 4-LANE UNDIVIDED ROADWAY WITH INSIDE LANE CLOSED.

DATE	REVISION	FILMED
05-20-21	REVISED NOTE 7	
11-07-19	REVISED NOTE 1, ADDED NOTE 9	
9-2-15	REVISED NOTE 2, ADDED NOTE 8, REVISED DRAWING (A) & REPLACED R2-5A WITH W3-5	
9-12-13	REVISED DETAIL OF RAISED PAVEMENT MARKERS	
3-11-10	ADDED (AFAD)	
11-20-08	REVISED SIGN DESIGNATIONS	
11-18-04	ADDED GENERAL NOTE	
10-18-96	ADDED R55-1	
4-26-96	CORRECTED (c) BEHIND G20-2	
6-8-95	CORRECTED SIGN IDENT. ON W1-4A	6-8-95
2-2-95	REVISED PER PART VI, MUTCD, SEPT. 3, 1993	
8-15-91	DRAWN AND PLACED IN USE	

ARKANSAS STATE HIGHWAY COMMISSION

STANDARD TRAFFIC CONTROLS FOR HIGHWAY CONSTRUCTION

STANDARD DRAWING TC-2

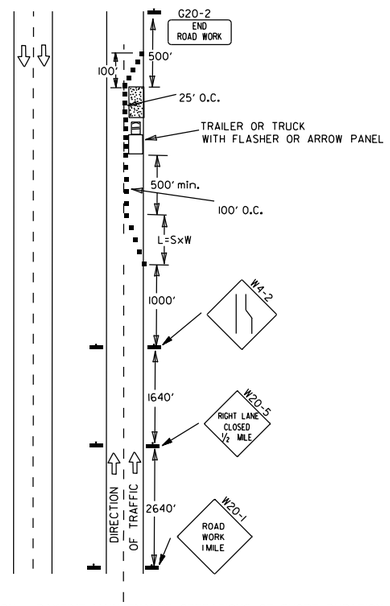

(A) TYPICAL APPLICATION - DAYTIME MAINTENANCE OPERATIONS OF SHORT DURATION ON A 4-LANE DIVIDED ROADWAY WHERE HALF OF THE ROADWAY IS CLOSED.

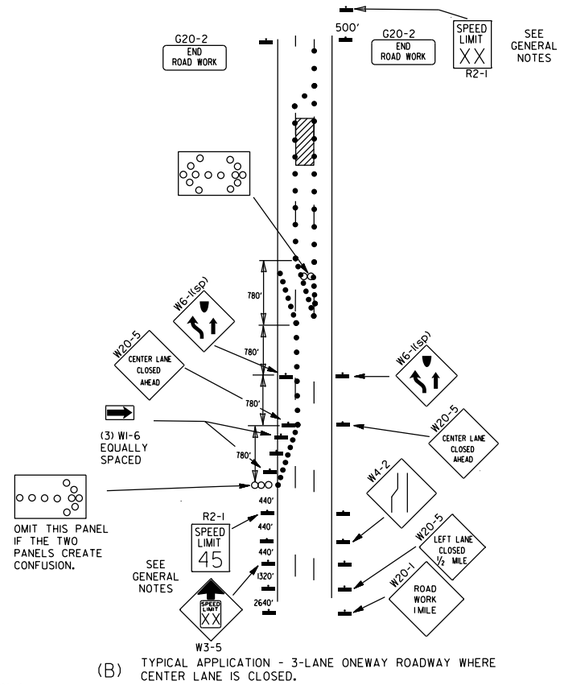

(B) TYPICAL APPLICATION - 3-LANE ONEWAY ROADWAY WHERE CENTER LANE IS CLOSED.

KEY:

- ARROW PANEL (IF REQUIRED)
- ■ CHANNELIZING DEVICE
- ● TRAFFIC DRUM

GENERAL NOTES:

1. A SPEED LIMIT REDUCTION MAY BE IMPLEMENTED ONLY WHEN DESIGNATED IN THE PLAN OR WHEN RECOMMENDED BY THE ROADWAY DESIGN DIVISION.
2. WHEN THE EXISTING SPEED LIMIT IS 55MPH AND THE PLANS REQUIRE A SPEED LIMIT OF 45MPH, THE R2-1(55) SHALL BE OMITTED AND THE W3-5 SHALL BE INSTALLED AT THAT LOCATION. ADDITIONAL R2-1 45MPH SPEED LIMIT SIGNS SHALL BE INSTALLED AT A MAXIMUM OF 1 MILE INTERVALS. AT THE END OF THE WORK AREA A R2-1(XX) SHALL BE INSTALLED TO MATCH ORIGINAL SPEED LIMIT.
3. WHEN THE EXISTING SPEED LIMIT IS 65MPH AND THE PLANS REQUIRE A SPEED LIMIT OF 55MPH, THE R2-1(45) SHALL BE OMITTED. ADDITIONAL R2-1 55MPH SPEED LIMIT SIGNS SHALL BE INSTALLED AT A MAXIMUM OF 1 MILE INTERVALS. AT THE END OF THE WORK AREA A R2-1(XX) SHALL BE INSTALLED TO MATCH ORIGINAL SPEED LIMIT.
4. THE MAXIMUM SPACING BETWEEN CHANNELIZING DEVICES IN A TAPER SHOULD BE APPROXIMATELY EQUAL IN FEET TO THE SPEED LIMIT. BEYOND THE TAPER, MAXIMUM SPACING SHALL BE TWO TIMES THE SPEED LIMIT OR AS DIRECTED BY THE ENGINEER.
5. WARNING LIGHTS AND/OR FLAGS MAY BE MOUNTED TO SIGNS OR CHANNELIZING DEVICES AT NIGHT AS NEEDED.
6. PAVEMENT MARKINGS NO LONGER APPLICABLE WHICH MIGHT CREATE CONFUSION IN THE MINDS OF VEHICLE OPERATORS SHALL BE REMOVED OR OBLITERATED AS SOON AS PRACTICABLE.
7. THE G20-1 SIGN WILL BE REQUIRED ON JOBS OF OVER TWO MILES IN LENGTH. WHEN THE LANE CLOSURE IS NOT AT THE BEGINNING OF THE PROJECT, THE G20-1 SIGN SHALL BE ERECTED 125' IN ADVANCE OF THE JOB LIMIT. ADDITIONAL W20-1 (1 MILE) SIGNS ARE NOT REQUIRED IN ADVANCE OF LANE CLOSURES THAT BEGIN INSIDE THE PROJECT LIMITS.
8. FLAGGERS SHALL USE STOP/SLOW PADDLES FOR CONTROLLING TRAFFIC THROUGH WORK ZONES. FLAGS MAY BE USED ONLY FOR EMERGENCY SITUATIONS.
9. ALL PLASTIC DRUMS AND CONES SHALL MEET THE REQUIREMENTS OF MANUAL FOR ASSESSING SAFETY HARDWARE (MASH).
10. TRAILER MOUNTED DEVICES SUCH AS ARROW PANELS AND PORTABLE CHANGEABLE MESSAGE SIGNS SHALL BE DELINEATED BY AFFIXING CONSPICUITY MATERIAL IN A CONTINUOUS LINE ON THE FACE OF THE TRAILER. WHEN PLACED ON OR ADJACENT TO THE SHOULDER AND NOT BEHIND A POSITIVE BARRIER, THESE DEVICES SHALL BE DELINEATED BY PLACING FIVE (5) TRAFFIC DRUMS, EQUALLY SPACED ALONG THE TRAFFIC SIDE OF THE DEVICE. PAYMENT FOR TRAFFIC DRUMS SHALL BE CONSIDERED INCLUDED IN THE PRICE BID FOR VARIOUS TRAILER MOUNTED DEVICES.
11. ALL TRAILER MOUNTED DEVICES SUCH AS ARROW PANELS AND PORTABLE CHANGEABLE MESSAGE SIGNS SHALL MEET THE REQUIREMENTS OF THE MANUAL FOR ASSESSING SAFETY HARDWARE (MASH).

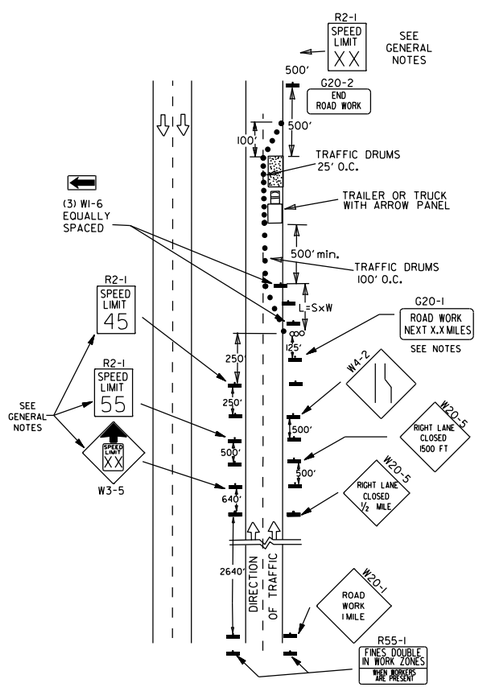

(C) TYPICAL APPLICATION - CONSTRUCTION OPERATIONS OF INTERMEDIATE TO LONG TERM DURATION ON A 4-LANE DIVIDED ROADWAY WHERE HALF OF THE ROADWAY IS CLOSED.

CHANNELIZING DEVICES

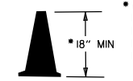

- WHEN CONES ARE USED ON FREEWAYS AND MULTI-LANE HIGHWAYS, THEY SHALL BE 28" MIN. DURING HOURS OF DARKNESS, 28" CONES SHALL BE USED ON ALL ROADWAYS, AND SHALL BE REFLECTORIZED IN ACCORDANCE WITH THE M.U.T.C.D.

CONES

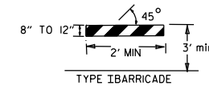

TYPE I BARRICADE

PLASTIC DRUM

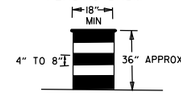

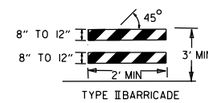

TYPE II BARRICADE

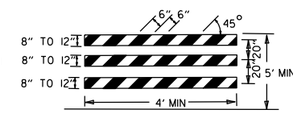

TYPE III BARRICADE

NOTE:
FOR ALL ROAD CLOSURES, THE TYPE III BARRICADES SHALL BE OF SUFFICIENT LENGTH TO EXTEND ACROSS ENTIRE ROADWAY.

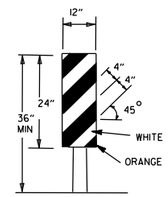

VERTICAL PANEL
VP-1R

VERTICAL PANEL PLACEMENT

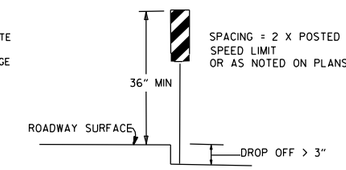

SPACING = 2 X POSTED SPEED LIMIT OR AS NOTED ON PLANS

FLAG

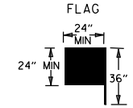

FLAG SHALL BE OF GOOD GRADE RED MATERIAL

TRAFFIC CONTROL DEVICES

NON-INTERSTATE			
VERTICAL DIFFERENTIAL	LOCATION	TRAFFIC CONTROL	
		≤ 45 MPH	> 45 MPH
≤ 1"	CENTERLINE	W8-11	W8-11
> 1" ≤ 3"	CENTERLINE	W8-11 AND CENTERLINE LANE STRIPING	W8-11 AND CENTERLINE LANE STRIPING
> 3"	CENTERLINE	STANDARD LANE CLOSURE(6)	STANDARD LANE CLOSURE(6)
≤ 3"	EDGE OF TRAVELED LANE OR EDGE OF SHOULDER	W8-9 AND TRAFFIC DRUMS(1)	W8-9 AND TRAFFIC DRUMS(1)
> 3" ≤ 6"	EDGE OF TRAVELED LANE OR EDGE OF SHOULDER	W8-17, EDGE LINE STRIPING, AND TRAFFIC DRUMS(1)	W8-17, EDGE LINE STRIPING, AND TRAFFIC DRUMS(1)
> 6" ≤ 18"	EDGE OF TRAVELED LANE OR EDGE OF SHOULDER	W8-17, EDGE LINE STRIPING, AND TRAFFIC DRUMS(1)	W8-17, EDGE LINE STRIPING, AND TRAFFIC DRUMS(2)
> 18" ≤ 24"	EDGE OF TRAVELED LANE OR EDGE OF SHOULDER	W8-17, EDGE LINE STRIPING, AND TRAFFIC DRUMS(1)	A STABILIZED WEDGE, W8-17, EDGE LINE STRIPING AND TRAFFIC DRUMS(3)
> 24"	EDGE OF TRAVELED LANE OR EDGE OF SHOULDER	PRECAST CONCRETE BARRIER(4) & EDGE LINES	PRECAST CONCRETE BARRIER(4) & EDGE LINES

INTERSTATE		
VERTICAL DIFFERENTIAL	LOCATION	TRAFFIC CONTROL
≤ 3"	CENTERLINE	W8-11 AND LANE STRIPING
≤ 3"	EDGE OF TRAVELED LANE OR EDGE OF SHOULDER	W8-9, EDGE LINE STRIPING, AND TRAFFIC DRUMS(2)
> 3" ≤ 6"	EDGE OF TRAVELED LANE OR EDGE OF SHOULDER	W8-17, EDGE LINE STRIPING, AND TRAFFIC DRUMS(2)
> 6"	EDGE OF TRAVELED LANE OR EDGE OF SHOULDER	PRECAST CONCRETE BARRIER & EDGE LINES

INTERSTATE AND NON-INTERSTATE		
FORESLOPE	HEIGHT	TRAFFIC CONTROL
1:1	> 2 FT	PRECAST CONCRETE BARRIER
2:1	≤ 5 FT	TRAFFIC DRUMS
2:1	> 5 FT	PRECAST CONCRETE BARRIER
Flatter than 2:1	N/A	TRAFFIC DRUMS

GENERAL NOTES:

1. WHEN THE SHOULDER AREA IS USED AS PART OF THE TRAVELED LANE AND THERE IS INSUFFICIENT WIDTH TO PLACE TRAFFIC DRUMS ON THE REMAINING SHOULDER WIDTH, THEN VERTICAL PANELS SHALL BE USED.
2. WHEN THERE IS INSUFFICIENT WIDTH TO PLACE TRAFFIC DRUMS ON THE REMAINING SHOULDER WIDTH, A STABILIZED WEDGE SHALL BE USED.
3. PRECAST CONCRETE BARRIER WALL CAN BE USED IN LIEU OF A STABILIZED WEDGE, W8-17 SIGN, EDGE LINE STRIPING, AND TRAFFIC DRUMS, IF AND WHERE DIRECTED BY THE ENGINEER.
4. A STABILIZED WEDGE, W8-17 SIGN, EDGE LINE STRIPING, AND TRAFFIC DRUMS CAN BE USED IN LIEU OF PRECAST CONCRETE BARRIER WALL, IF AND WHERE DIRECTED BY THE ENGINEER.
5. W21-5, W21-5a, AND/OR W21-5b SIGNS SHALL BE USED WHERE THE ROADWAY IS UNOBSTRUCTED IF AND WHERE DIRECTED BY THE ENGINEER.
6. TIME LIMITATIONS MUST CONFORM TO SECTION 603 OF THE STANDARD SPECIFICATIONS FOR HIGHWAY CONSTRUCTION (CURRENT EDITION).

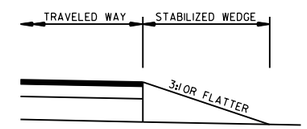

STABILIZED WEDGE

NOTE:
MATERIALS FOR THE STABILIZED WEDGE SHALL MEET THE REQUIREMENTS PROVIDED IN SECTION 603.02 OF THE STANDARD SPECIFICATIONS.

STOP SLOW PADDLE

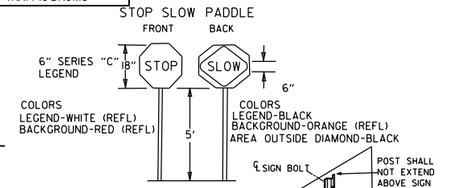

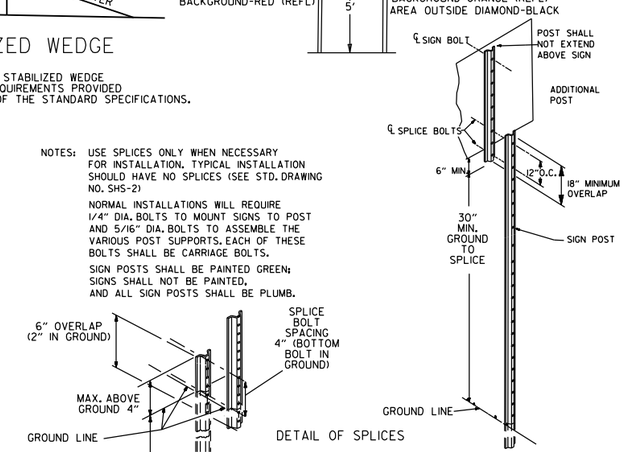

NOTES: USE SPLICES ONLY WHEN NECESSARY FOR INSTALLATION. TYPICAL INSTALLATION SHOULD HAVE NO SPLICES (SEE STD. DRAWING NO. SHS-21)

NORMAL INSTALLATIONS WILL REQUIRE 1/4" DIA. BOLTS TO MOUNT SIGNS TO POST AND 5/16" DIA. BOLTS TO ASSEMBLE THE VARIOUS POST SUPPORTS. EACH OF THESE BOLTS SHALL BE CARRIAGE BOLTS.

SIGN POSTS SHALL BE PAINTED GREEN; SIGNS SHALL NOT BE PAINTED, AND ALL SIGN POSTS SHALL BE PLUMB.

DETAIL OF SPLICES

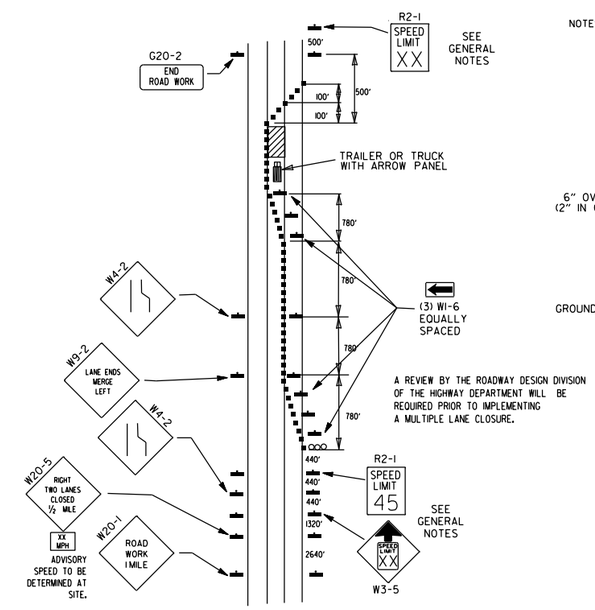

A REVIEW BY THE ROADWAY DESIGN DIVISION OF THE HIGHWAY DEPARTMENT WILL BE REQUIRED PRIOR TO IMPLEMENTING A MULTIPLE LANE CLOSURE.

(D) TYPICAL APPLICATION - CLOSING MULTIPLE LANES OF A MULTILANE HIGHWAY.

DATE	REVISION	FILMED
08-12-21	REVISED TRAFFIC CONTROL DEVICES AND NOTES	
05-20-21	REVISED NOTE 10	
2-27-20	REVISED TRAFFIC CONTROL DEVICES DETAILS	
11-07-19	REVISED NOTE 9, ADDED NOTE 11	
7-25-19	REVISED TRAFFIC CONTROL DEVICES DETAILS	
9-2-15	REVISED NOTE 2 & REPLACED R2-5A WITH W3-5	
10-15-09	ADDED REFERENCE TO MASH	
11-20-08	REVISED SIGN DESIGNATIONS	
11-18-04	ADDED NOTE	
10-1-98	ADDED NOTE	
4-03-97	ADDED (SP) TO W6-1& REVISED TRAFFIC CONTROL DEVICES NOTE	
10-18-96	ADDED R55-1	
10-12-95	MOVED UPPER SPLICE	
6-8-95	REVISED SPLICE DETAIL, TEXT	6-8-95
2-2-95	REVISED PER PART VI, MUTCD, SEPT. 3, 1993	
8-15-91	DRAWN AND PLACED IN USE	

ARKANSAS STATE HIGHWAY COMMISSION

STANDARD TRAFFIC CONTROLS FOR HIGHWAY CONSTRUCTION

STANDARD DRAWING TC-3

REINFORCING BAR TABLE PER BARRIER UNIT

MARK	LOCATION	BAR SIZE	(NO. BARS)	SKETCH
H-1	HORIZONTAL IN BARRIER TIED INSIDE V-1 BARS	#5	(6)	19'-3"
H-2	CENTERED ABOVE DRAIN SLOTS LONG. & TRANSVERSELY	#5	(6)	6'-6"
H-3	TIED ABOVE H-1 BARS TO SUPPORT H-2, TIED TO V-1	#4	(2)	1'-6"
S-1	OVER LIFT HOLES	#4	(2)	2'-5", 90°, 3 3/8" R, LIFTING HOLE
S-2	HORIZ. AROUND SLOTS BETWEEN V-1'S @ DRAIN SLOTS	#4	(2)	1 1/2" R, SLOTS, 7", 1'-6", 1" MIN. CLEAR TO BAR; 5'-1" BAR W/(4) 1 1/2" R BENDS & MIN. 1'-0" OVERLAP
V-1	VERTICAL IN BARRIER(3) EACH END & (2) AT EACH DRAIN SLOTS	#5	(16)	TOTAL LENGTH 4'-9"; 2 3/16" R, 12°, 1 1/2", 9", 2'-1 3/8", 4 3/8"

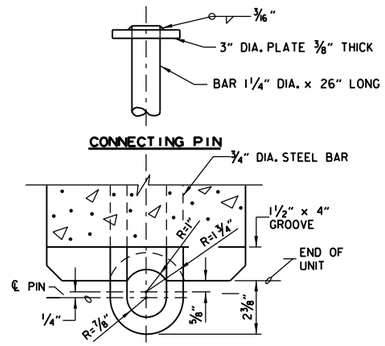

CONNECTION DETAILS

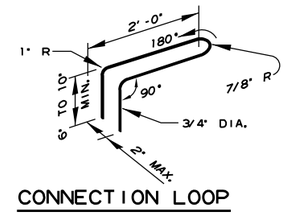

CONNECTION LOOP

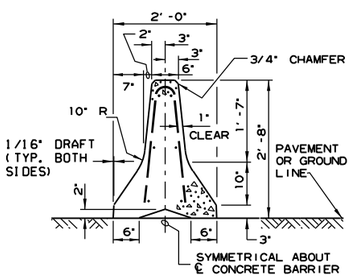

SECTION A-A

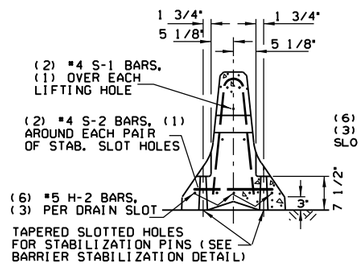

SECTION B-B

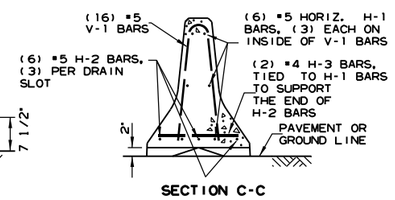

SECTION C-C

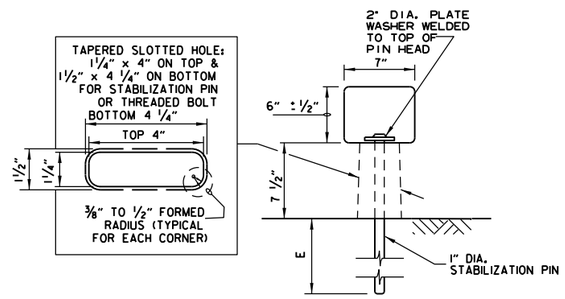

BARRIER STABILIZATION DETAIL

ROADWAY SECTION

(E) 4" - CONCRETE PAVEMENT
8" - ASPHALT PAVEMENT
12" - SHOULDER AREAS

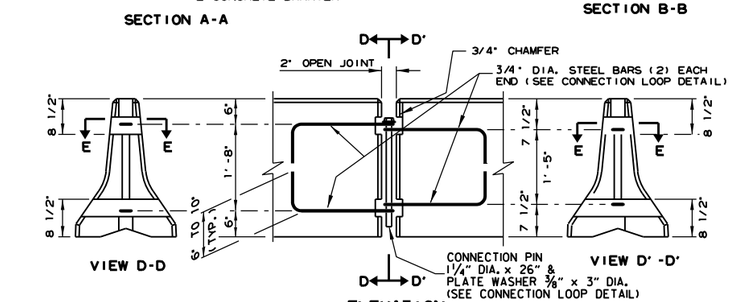

ELEVATION

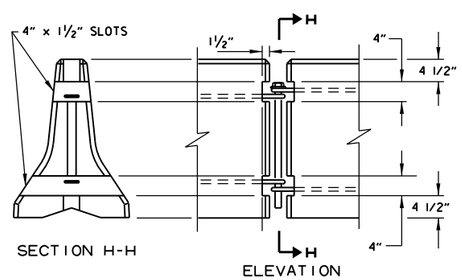

BARRIER REMOVAL SLOT DETAILS

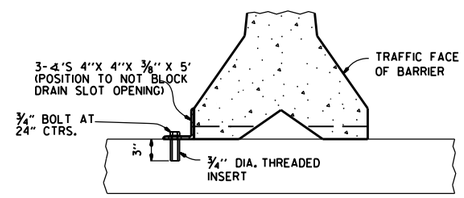

NOTE: " THREADED INSERTS SHALL BE CAST IN PLACE FOR ALL NEW BRIDGE DECKS AND DRILLED AND GROUTED FOR EXISTING BRIDGE DECKS. INSERTS SHALL HAVE A MINIMUM ULTIMATE LOAD CAPACITY OF 8000 LBS. IN TENSION. AFTER REMOVAL OF BARRIER, BOLTS, AND ANGLES, THE INSERTS SHALL BE FILLED WITH APPROVED NON-SHRINK EPOXY.

BARRIER STABILIZATION DETAIL

BRIDGE DECKS

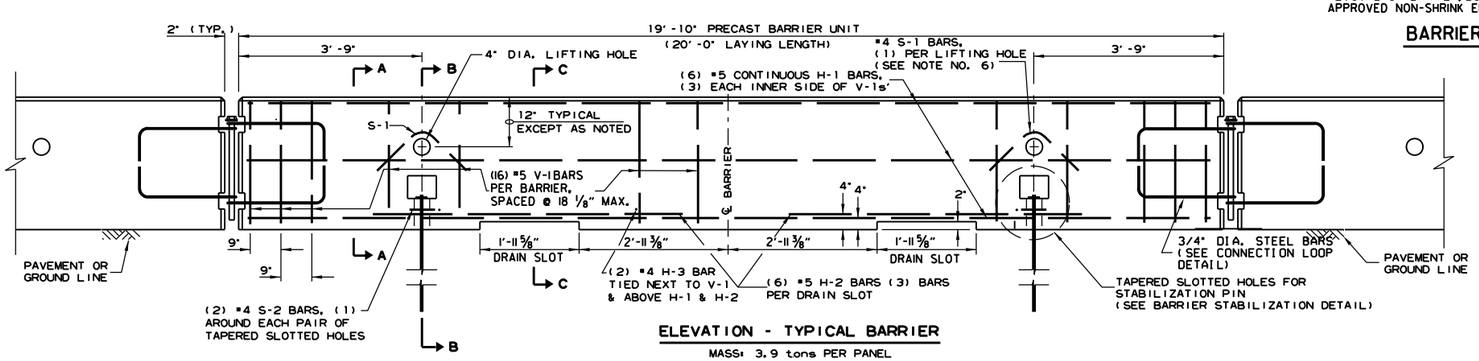

ELEVATION - TYPICAL BARRIER

MASS: 3.9 tons PER PANEL

GENERAL NOTES

1. THE CONTRACTOR SHALL FURNISH THE PRECAST CONCRETE BARRIER UNITS AND SHALL BE RESPONSIBLE FOR THE MANUFACTURE, SHIPMENT, STORAGE, PLACEMENT AND REMOVAL. AT THE COMPLETION OF THE PROJECT, THE PRECAST UNITS WILL REMAIN THE PROPERTY OF THE CONTRACTOR.

2. MATERIALS SHALL MEET THE FOLLOWING MINIMUM REQUIREMENTS:
   CONCRETE: 2500 PSI COMPRESSIVE STRENGTH AT 28 DAYS.
   REINFORCING STEEL: AASHTO M 31 OR M 53, GRADE 60
   STRUCTURAL STEEL: AASHTO-M270 GRADE 36 SHALL BE USED FOR THE CONNECTION PIN, CONNECTION LOOPS, AND STABILIZATION PINS. A ONE PIECE PIN WITH A 3" ROUNDED TOP MAY BE USED IN PLACE OF THE DETAILED CONNECTION PIN.
   DELINEATORS: DELINEATORS SHALL BE MOUNTED AT 10' SPACING ON TOP OF PRECAST BARRIER.

   IN APPLICATIONS WHERE BARRIER WALL IS WITHIN 6 FEET OF A TRAFFIC LANE, ADDITIONAL DELINEATORS SHALL BE PLACED ON THE BARRIER AT 10' SPACING APPROXIMATELY ONE (1) FOOT FROM THE TOP OF THE BARRIER. DELINEATORS SHALL BE ON THE ARDOT QUALIFIED PRODUCTS LIST FOR CONSTRUCTION CONCRETE BARRIER MARKERS.
   DELINEATOR COLOR SHALL BE IN ACCORDANCE WITH THE MANUAL ON UNIFORM TRAFFIC CONTROL DEVICES.
   PAYMENT FOR DELINEATORS SHALL BE CONSIDERED INCLUDED IN THE PRICE BID PER LIN. FT. FOR "FURNISHING AND INSTALLING PRECAST CONCRETE BARRIER". THE CONTRACTOR SHALL CERTIFY TO THE ENGINEER THAT THE MATERIAL AND THE DESIGN USED IN THE PRECAST BARRIER UNITS MEETS THE REQUIREMENTS AS SHOWN ON THIS STANDARD DRAWING.

3. OTHER PRECAST CONCRETE BARRIERS THAT HAVE BEEN CRASH TESTED AND APPROVED BY THE FEDERAL HIGHWAY ADMINISTRATION TO MEET THE REQUIREMENTS OF MANUAL FOR ASSESSING SAFETY HARDWARE (MASH) WILL BE ACCEPTED IN LIEU OF THE BARRIER SHOWN. DRAIN SLOTS SHALL BE PROVIDED AS NEEDED OR AS DIRECTED BY THE ENGINEER. THE CONTRACTOR SHALL FURNISH A CERTIFICATION OF MANUAL FOR ASSESSING SAFETY HARDWARE (MASH) COMPLIANCE FOR ANY OTHER TYPES OF PRECAST BARRIER TO BE USED. THE CERTIFICATION SHALL STATE THAT THE PRECAST CONCRETE BARRIER MEETS THE REQUIREMENTS OF MANUAL FOR ASSESSING SAFETY HARDWARE (MASH). MIXING OF SHAPES WILL NOT BE ALLOWED IN A CONTINUOUS LINE OF UNITS.

4. DOWEL HOLES IN PAVEMENT OR BRIDGE SLABS THAT ARE TO REMAIN IN PLACE SHALL BE FILLED. HOLES IN CONCRETE PAVEMENT AND BRIDGE SLABS SHALL BE FILLED WITH AN APPROVED NON-SHRINK EPOXY GROUT. HOLES IN ASPHALT PAVEMENT SHALL BE FILLED WITH AN APPROVED ASPHALT JOINT FILLER. PAYMENT FOR DRILLING AND FILLING HOLES TO BE INCLUDED IN THE PRICE FOR VARIOUS BARRIER ITEMS.

5. ATTACH UNITS TO ROADWAY SURFACE WITH STABILIZATION PINS AND TO DECK SLABS USING BOLTS WHEN REQUIRED.

6. A 4" WHITE PVC SLEEVE MAY BE USED TO FORM THE LIFTING HOLE AND IF USED THE SLEEVE IS TO BE LEFT IN PLACE.

DATE	REVISION	FILMED
11-07-19	REVISED NOTE 3	
2-27-14	REVISED BARRIER STABILIZATION DETAIL	
10-15-09	ADDED REFERENCE TO MASH	
8-5-09	REV. NOTE 3 CONCERNING DRAIN SLOTS	
11-29-07	REVISED NOTE 3	
5-25-06	DELETED GENERAL NOTE 7	
11-18-04	REVISED BARRIER STABILIZATION DETAIL BRIDGE DECKS	
4-10-03	REVISED GENERAL NOTE 2	
8-22-02	ISSUED NEW DRAWING	

ARKANSAS STATE HIGHWAY COMMISSION

STANDARD TRAFFIC CONTROLS FOR HIGHWAY CONSTRUCTION - TEMPORARY PRECAST BARRIER

STANDARD DRAWING TC-4

Ⓐ 4 feet or greater preferred. If less than 4 feet, Precast Units shall be connected to slab (SEE BARRIER STABILIZATION DETAIL-BRIDGE DECKS STD. DRWG. TC-4)

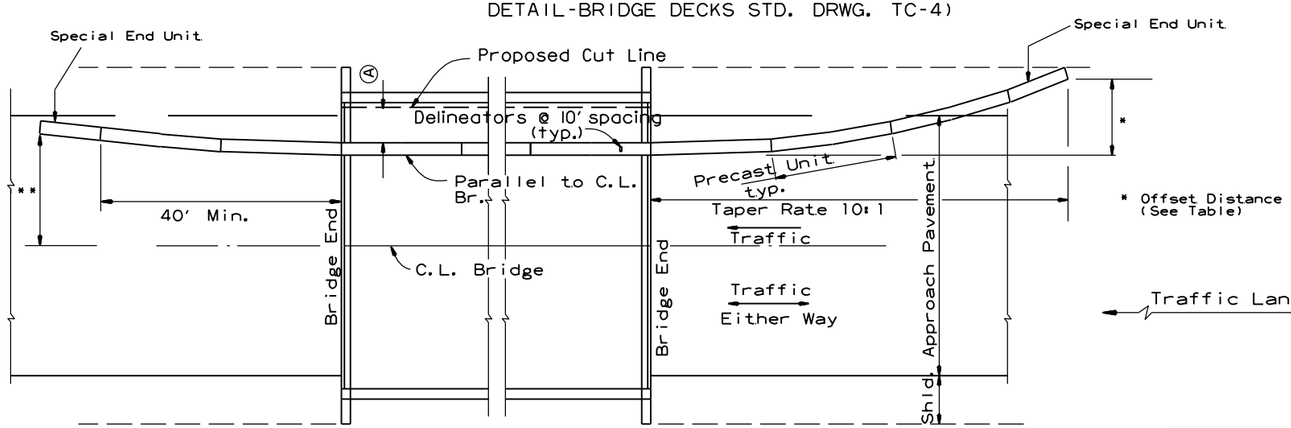

BARRIER PLACEMENT ALONG BRIDGE WITH OFFSET

No Scale

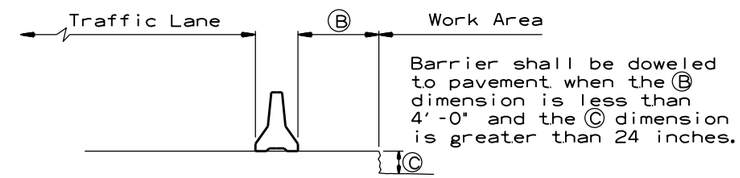

Barrier shall be doweled to pavement when the Ⓑ dimension is less than 4'-0" and the Ⓒ dimension is greater than 24 inches.

SECTION J-J

No Scale

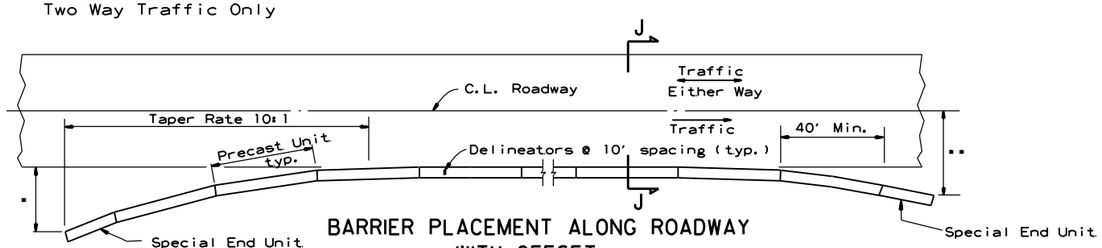

BARRIER PLACEMENT ALONG ROADWAY WITH OFFSET

No Scale

* Offset Distance (See Table)

** Offset Distance For Two Way Traffic Only

Offset Distance Table

Speed (MPH)	Offset Distance (FT.)
≤ 45	12
> 45	18

If offset distance is not attainable, then see "Barrier Placement With Attenuator" Detail shown below.

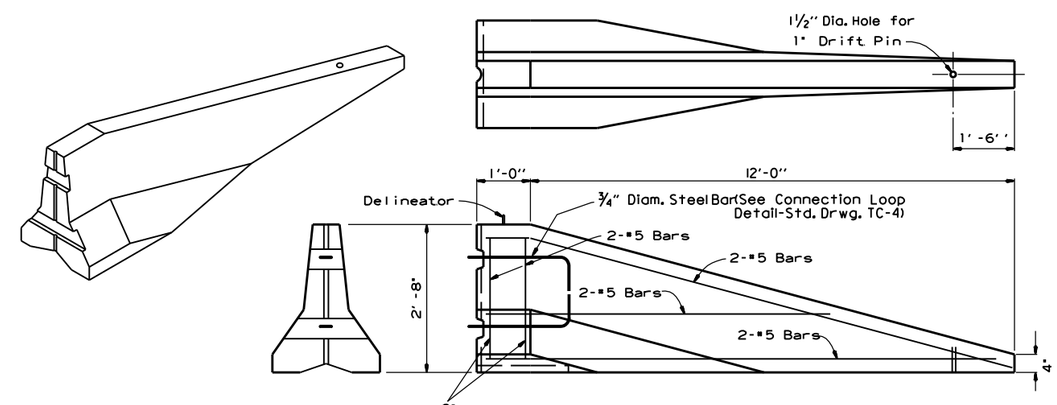

SPECIAL END UNIT

No Scale

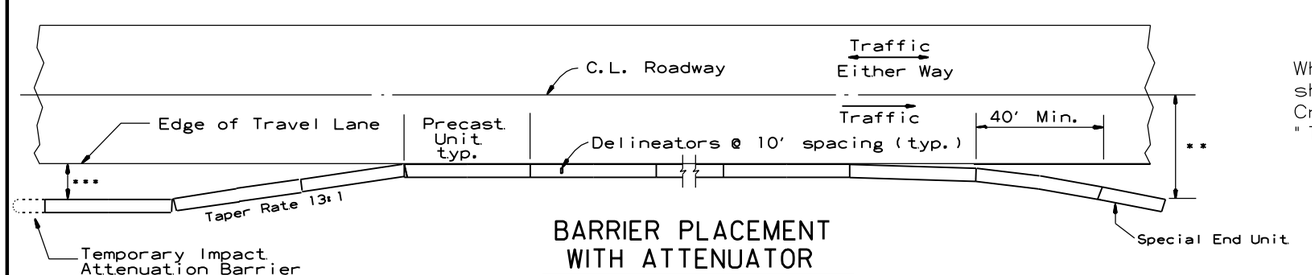

BARRIER PLACEMENT WITH ATTENUATOR

No Scale

*** Min. 3'-0" From Edge of Travel Lane to Nearest Edge of Attenuator

** Offset Distance For Two Way Traffic Only

General Notes

When shown on the Plans, the ends of the Temporary Precast Concrete Barrier shall be protected with a Manual For Assessing Safety Hardware (MASH) approved Crash Cushion. Payment for Crash Cushions shall be made under the item of "Temporary Impact Attenuation Barrier."

DATE	REVISION	FILMED
11-07-19	REVISED NOTE	
10-15-09	ADDED REFERENCE TO MASH	
5-25-06	REVISED BARRIER PLACEMENT	
8-22-02	ISSUED NEW DRAWING	

ARKANSAS STATE HIGHWAY COMMISSION

STANDARD TRAFFIC CONTROLS FOR HIGHWAY CONSTRUCTION - TEMPORARY PRECAST BARRIER

STANDARD DRAWING TC-5

GENERAL NOTES

INSTALL A MINIMUM OF 2 UPSLOPE STAKES AND 4 DOWNSLOPE STAKES AT AN ANGLE TO WEDGE WATTLE TO BOTTOM OF DITCH.

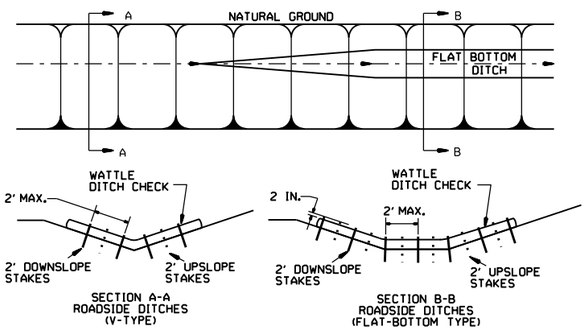

WATTLE DITCH CHECK (E-1)

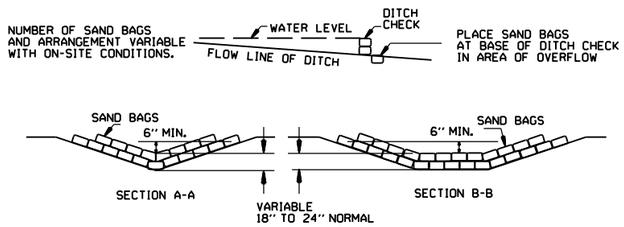

SAND BAG DITCH CHECK (E-5)

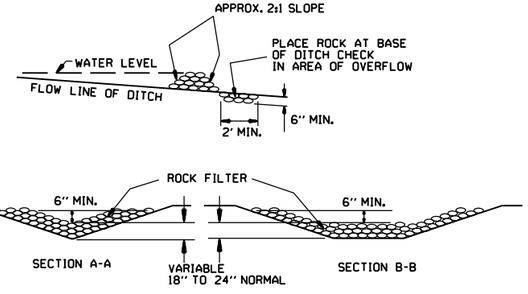

ROCK DITCH CHECK (E-6)

GENERAL NOTES

GEOTEXTILE FABRIC (TYPE 4) IN ACCORDANCE WITH SECTION 625

GEOTEXTILE FABRIC SHALL BE SPLICED TOGETHER WITH A SEWN SEAM ONLY AT A SUPPORT POST OR TWO SECTIONS OF FENCE MAY BE OVERLAPPED INSTEAD. PAYMENT OF ADDITIONAL MATERIAL FOR OVERLAP WILL NOT BE MADE.

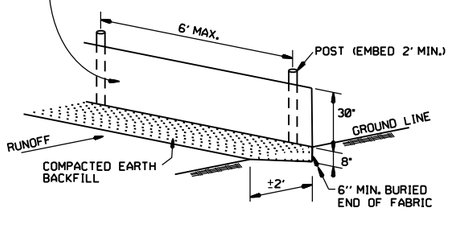

SILT FENCE (E-11)

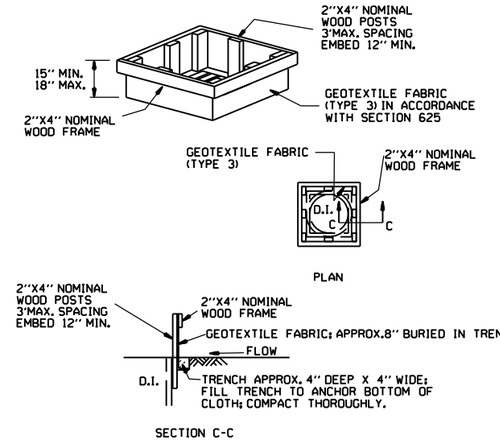

DROP INLET SILT FENCE (E-7)

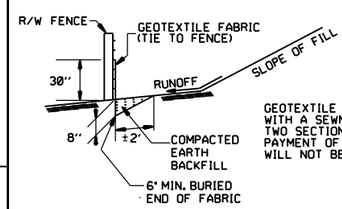

GENERAL NOTES

GEOTEXTILE FABRIC SHALL BE SPLICED TOGETHER WITH A SEWN SEAM ONLY AT A SUPPORT POST, OR TWO SECTIONS OF FENCE MAY BE OVERLAPPED INSTEAD. PAYMENT OF ADDITIONAL MATERIAL FOR OVERLAP WILL NOT BE MADE.

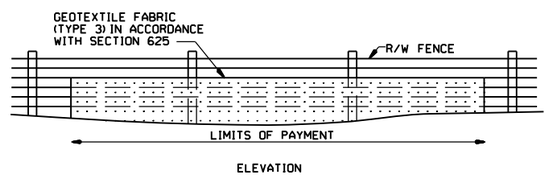

SILT FENCE ON R/W FENCE (E-4)

GENERAL NOTES

1. STRAW BALES SHALL BE INSTALLED SO THAT THE BINDINGS ARE ORIENTED AROUND THE SIDES RATHER THAN ALONG THE TOPS AND BOTTOMS OF THE BALES. THE BALES SHALL BE A MINIMUM OF 30 INCHES IN LENGTH.

2. NO GAPS SHALL BE LEFT BETWEEN BALES.

3. BALED STRAW FILTER BARRIERS COMPLETED AND ACCEPTED WILL BE MEASURED BY THE BALE IN PLACE AS AUTHORIZED BY THE ENGINEER AND WILL BE PAID FOR AT THE CONTRACT UNIT PRICE BID PER BALE FOR BALED STRAW DITCH CHECKS.

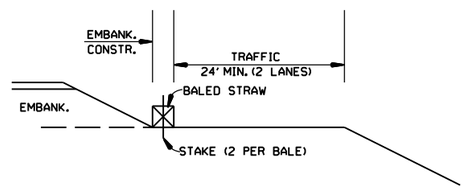

BALED STRAW FILTER BARRIER (E-2)

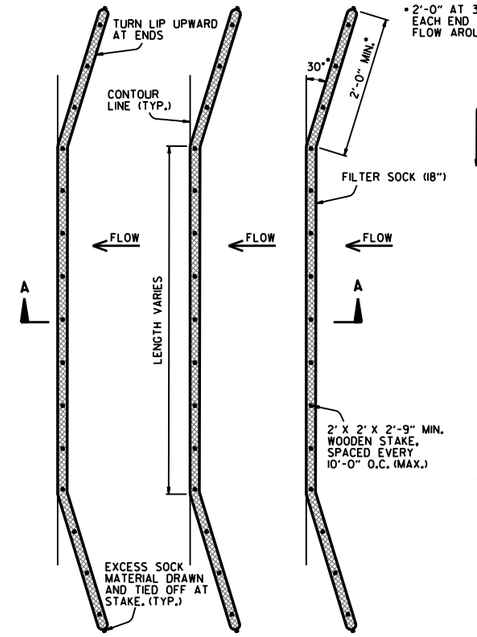

PLAN VIEW
N.T.S.

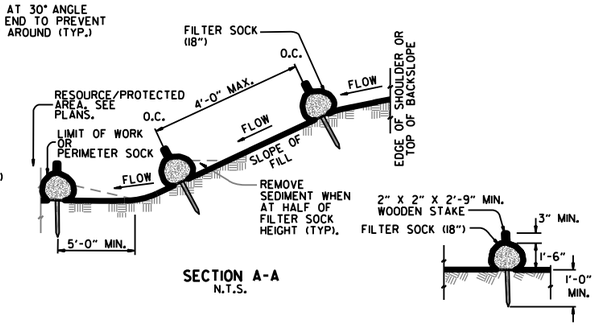

SECTION A-A
N.T.S.

STAKING DETAIL
N.T.S.

NOTES:

1. FILTER SOCKS CAN BE PLACED AT THE TOP, ON THE FACE, AND AT THE TOE OF SLOPES AS SEDIMENT-TRAPPING DEVICES FOR SHEET FLOW RUNOFF.

2. FILTER SOCKS ARE TYPICALLY SUPPLIED AND INSTALLED WITH 18 INCH DIAMETERS. DIAMETER TOLERANCE IS 2 INCHES, AS FILTER SOCKS TEND TO FLATTEN OUT WHEN PLACED.

3. STEEL POSTS MAY BE USED AND SHALL BE ROLLED FROM HIGH CARBON STEEL AND HAVE A MINIMUM OF 1.25 LB./FT. POSTS SHALL BE HOT-DIPPED GALVANIZED OR PAINTED WITH HIGH-GRADE WEATHER RESISTANT BROWN OR BLACK STEEL PAINT. STEEL POSTS SHALL BE EQUIPPED WITH ANCHOR PLATE HAVING A MINIMUM AREA OF 14 SQUARE INCHES. POSTS SHALL BE STUDDED, EMBOSSED, OR PUNCHED. POSTS AND ANCHOR PLATES SHALL CONFORM TO THE REQUIREMENTS OF ASTM A702. NO ADDITIONAL PAYMENT WILL BE PROVIDED FOR STEEL POSTS, BUT PRICE WILL BE CONSIDERED SUBIDIARY TO "FILTER SOCK (18")."

4. FILTER SOCKS MAY BE UP TO 250 FEET LONG. WHEN USED ON LONG SLOPES, FILTER SOCKS MAY BE JOINTED OR STAGGERED AS SHOWN IN DETAILS.

5. INSPECT FILTER SOCKS AFTER EACH RUNOFF EVENT. REMOVE AND REPLACE IF SIGNS OF UNDERCUTTING OR DOWNSTREAM RILLS ARE OBSERVED.

FILTER SOCK ALONG SLOPE (E-3)

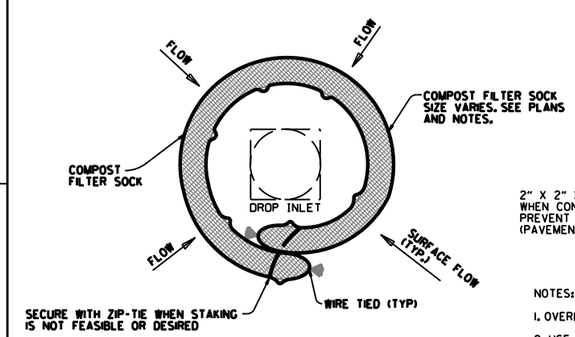

DROP INLET PLAN VIEW
N.T.S.

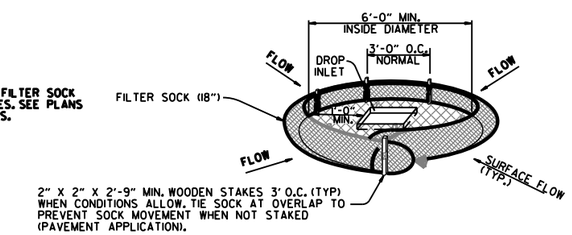

DROP INLET PERSPECTIVE VIEW
N.T.S.

NOTES:

1. OVERLAP ENDS OF SOCK (1' MIN. 3' MAX.).

2. USE 18" DIA. SOCK IN NON-TRAFFIC AREAS OR AREAS WHERE SAFETY IS NOT A CONCERN.

COMPOST FILTER SOCK DROP INLET PROTECTION (E-13)

DATE	REVISION	FILMED
11-16-17	ADDED FILTER SOCK E-3 AND E-13	
12-15-11	DELETED BALED STRAW DITCH CHECK & ADDED WATTLE DITCH CHECK	
11-18-98	ADDED NOTES	
07-02-98	ADDED BALED STRAW FILTER BARRIER (E-2)	
07-20-95	REVISED SILT FENCE E-4 AND E-11	7-20-95
07-15-94	REV. E-4 & E-11 MIN. 13" BURIED END OF FABRIC	
06-02-94	REVISED E-1,4,7 & 11; DELETED E-2 & 3	6-2-94
04-01-93	REDRAWN	
10-01-92	REDRAWN	
08-02-76	ISSUED R.D.M.	298-7-28-76

ARKANSAS STATE HIGHWAY COMMISSION

TEMPORARY EROSION CONTROL DEVICES

STANDARD DRAWING TEC-1

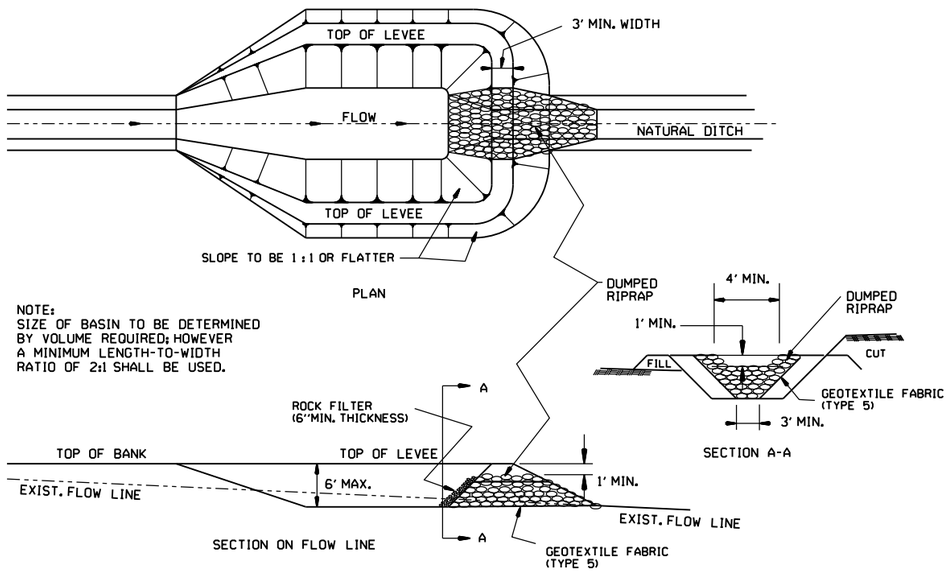

SEDIMENT BASIN WITH RIPRAP OUTLET (E-9)

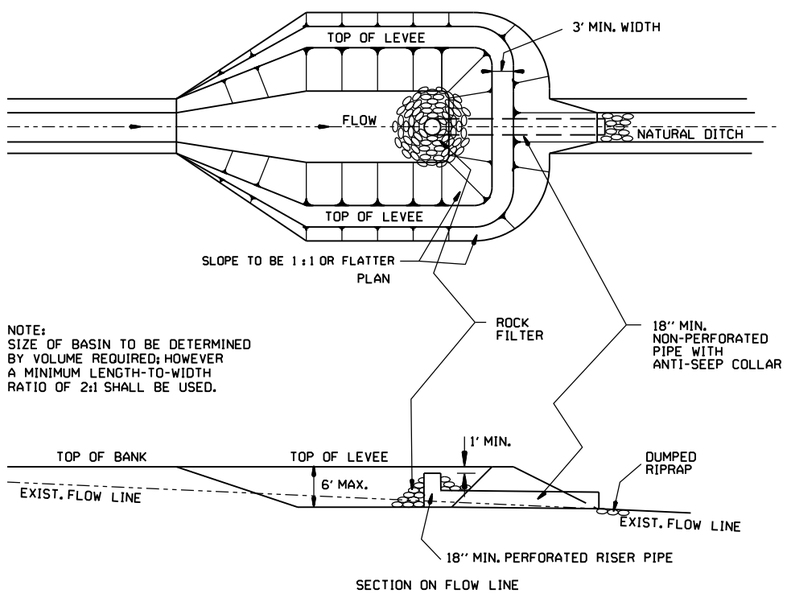

SEDIMENT BASIN WITH PIPE OUTLET (E-10)

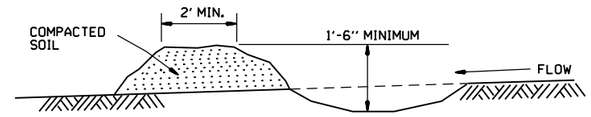

DIVERSION DITCH (E-8)

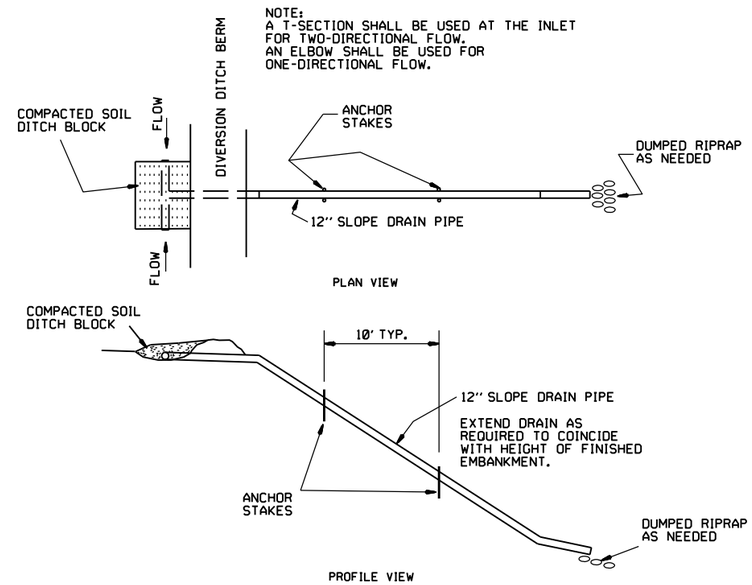

SLOPE DRAIN (E-12)

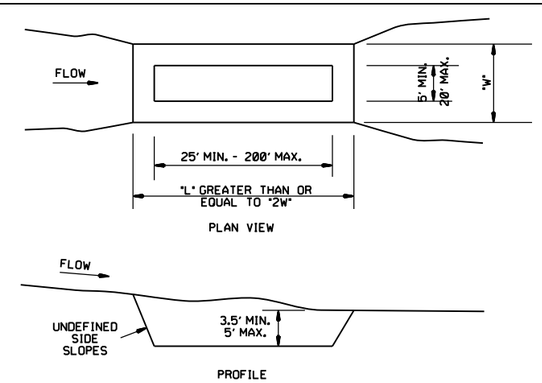

SEDIMENT BASIN (E-14)

DATE	REVISION	FILMED
6-2-94	Revised E-8 & E-12; Added E-14 & Deleted E-13	
4-1-93	ISSUED	

ARKANSAS STATE HIGHWAY COMMISSION

TEMPORARY EROSION CONTROL DEVICES

STANDARD DRAWING TEC-2

CLEARING AND GRUBBING

CONSTRUCTION SEQUENCE

1. PLACE PERIMETER CONTROLS (I.E. SILT FENCES , DIVERSION DITCHES, SEDIMENT BASINS, ETC.)
2. PERFORM CLEARING AND GRUBBING OPERATION.

EXCAVATION

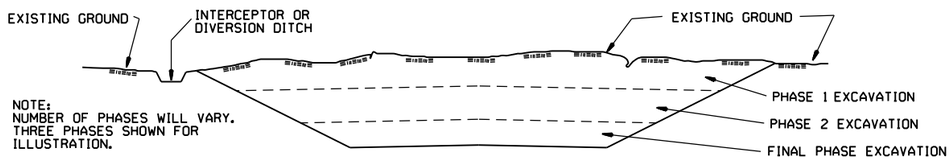

GENERAL NOTE

ALL CUT SLOPES SHALL BE DRESSED, PREPARED, SEEDED, AND MULCHED AS THE WORK PROGRESSES. SLOPES SHALL BE EXCAVATED AND STABILIZED IN EQUAL INCREMENTS NOT TO EXCEED 25 FEET, MEASURED VERTICALLY.

CONSTRUCTION SEQUENCE

1. EXCAVATE AND STABILIZE INTERCEPTOR AND/OR DIVERSION DITCHES.
2. PERFORM PHASE 1 EXCAVATION. PLACE PERMANENT OR TEMPORARY SEEDING.
3. PERFORM PHASE 2 EXCAVATION. PLACE PERMANENT OR TEMPORARY SEEDING.
4. PERFORM FINAL PHASE OF EXCAVATION. PLACE PERMANENT OR TEMPORARY SEEDING. STABILIZE DITCHES. CONSTRUCT DITCH CHECKS, DIVERSION DITCHES, SEDIMENT BASINS, OR OTHER EROSION CONTROL DEVICES AS REQUIRED.

EMBANKMENT

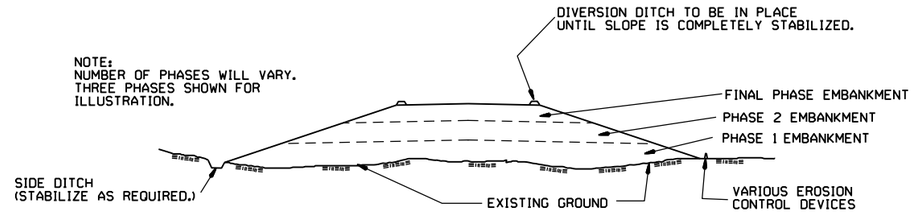

GENERAL NOTE

ALL EMBANKMENT SLOPES SHALL BE DRESSED, PREPARED, SEEDED, AND MULCHED AS THE WORK PROGRESSES. SLOPES SHALL BE CONSTRUCTED AND STABILIZED IN EQUAL INCREMENTS NOT TO EXCEED 25 FEET, MEASURED VERTICALLY.

CONSTRUCTION SEQUENCE

1. CONSTRUCT DIVERSION DITCHES, DITCH CHECKS, SEDIMENT BASINS, SILT FENCES, OR OTHER EROSION CONTROL DEVICES AS SPECIFIED.
2. PLACE PHASE 1 EMBANKMENT WITH PERMANENT OR TEMPORARY SEEDING. PROVIDE DIVERSION DITCHES AND SLOPE DRAINS IF EMBANKMENT CONSTRUCTION IS TO BE TEMPORARILY ABANDONED FOR A PERIOD OF GREATER THAN 21 DAYS.
3. PLACE PHASE 2 EMBANKMENT WITH PERMANENT OR TEMPORARY SEEDING. PROVIDE DIVERSION DITCHES AND SLOPE DRAINS IF EMBANKMENT CONSTRUCTION IS TO BE TEMPORARILY ABANDONED FOR A PERIOD OF GREATER THAN 21 DAYS.
4. PLACE FINAL PHASE OF EMBANKMENT WITH PERMANENT OR TEMPORARY SEEDING. PLACE DIVERSION DITCHES AND SLOPE DRAINS AND MAINTAIN UNTIL ENTIRE SLOPE IS STABILIZED.

DATE	REVISION	FILMED
11-03-94	CORRECTED SPELLING	
6-2-94	Drawn & Issued	6-2-94

ARKANSAS STATE HIGHWAY COMMISSION

TEMPORARY EROSION CONTROL DEVICES

STANDARD DRAWING TEC-3

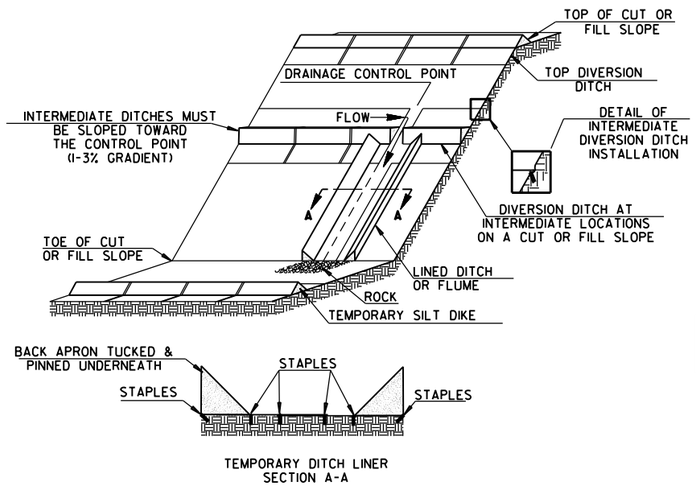

TRIANGULAR SILT DIKE INSTALLATION FOR DIVERSION DITCH AND/OR DITCH LINER

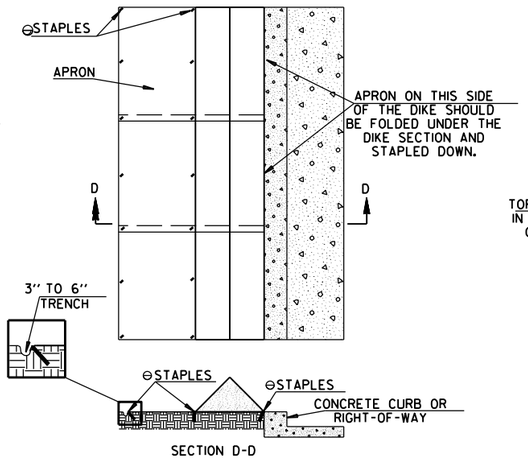

TRIANGULAR SILT DIKE INSTALLATION FOR CONTINUOUS BARRIER

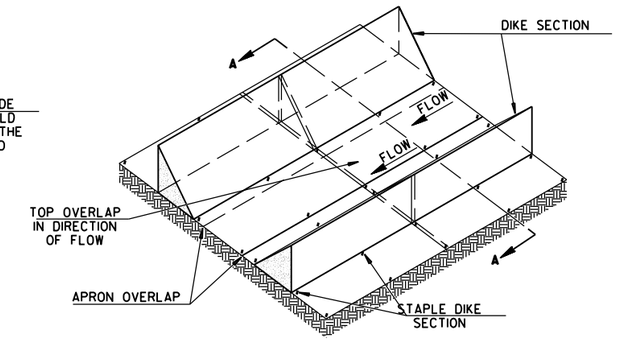

TRIANGULAR SILT DIKE INSTALLATION FOR TEMPORARY DITCH LINER

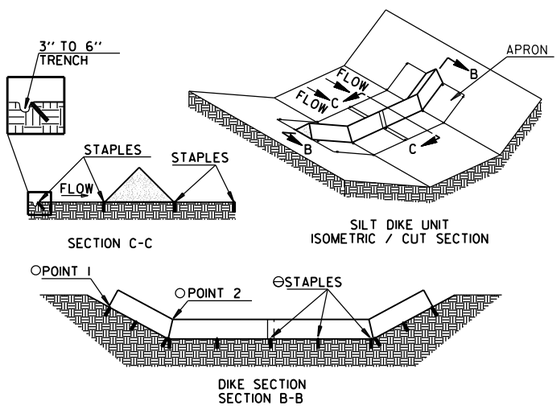

TRIANGULAR SILT DIKE INSTALLATION FOR ROADWAY DITCH OR DRAINAGE DITCH

○ POINT "1" MUST BE HIGHER THAN POINT "2" TO ENSURE THAT WATER FLOWS OVER THE DIKE AND NOT AROUND THE ENDS.

⊖ STAPLES SHALL BE PLACED WHERE THE UNITS OVERLAP AND IN THE CENTER OF THE UNIT AS SHOWN ON THE DIAGRAM.

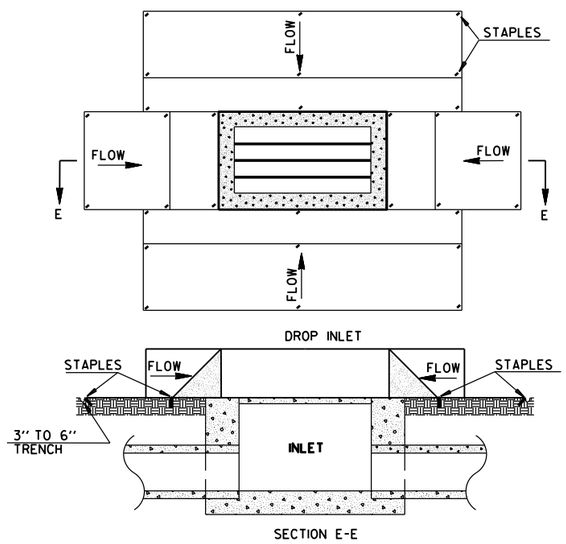

TRIANGULAR SILT DIKE INSTALLATION FOR DROP INLETS

GENERAL NOTES

1. THIS WORK SHALL CONSIST OF FURNISHING, INSTALLING, AND MAINTAINING THE TRIANGULAR SILT DIKE. THE DIKES SHALL BE USED AS A CONTINUOUS LINE BARRIER AT THE TOE OF SLOPE OR ACROSS THE ROADWAY DITCH TO CONTAIN SEDIMENT AND MINIMIZE EROSION, OR AS DIRECTED BY THE ENGINEER. THESE DIKES SHALL BE INSTALLED AND LOCATED AS SOON AS CONSTRUCTION WILL ALLOW OR AS DIRECTED BY THE ENGINEER.

2. TRIANGULAR SILT DIKE SHALL BE TRIANGULAR SHAPED HAVING A HEIGHT OF AT LEAST 8" TO 10" IN THE CENTER WITH EQUAL SIDES AND A 16" TO 20" BASE. THE TRIANGULAR SHAPED INNER MATERIAL SHALL BE URETHANE FOAM. THE OUTER COVER SHALL BE A WOVEN GEOTEXTILE FABRIC PLACED AROUND THE INNER MATERIAL & ALLOWED TO EXTEND BEYOND BOTH SIDES OF THE TRIANGLE 24" TO 36". THIS FABRIC SHOULD BE MILDEW RESISTANT, ROT-PROOF AND RESISTANT TO HEAT AND ULTRAVIOLET RADIATION MEETING REQUIREMENTS FOR SEDIMENT CONTROL IN AASHTO M288. THE DIKES SHALL BE ATTACHED TO THE GROUND WITH WIRE STAPLES. THE STAPLES SHALL BE NO. 11 GAUGE WIRE AND BE AT LEAST 6" TO 8" LONG. STAPLES SHALL BE PLACED AS SHOWN ON THESE DETAILS.

   THE CONTRACTOR SHALL INSPECT ALL DIKES AFTER EACH RAINFALL EVENT OF AT LEAST 0.5" OR GREATER. ANY DEFICIENCIES OR DAMAGE SHALL BE REPAIRED BY THE CONTRACTOR. ACCUMULATED SILT OR DEBRIS SHALL BE REMOVED AND RELOCATED AS DIRECTED BY THE ENGINEER. IF THE DIKES ARE DAMAGED OR INADVERTENTLY MOVED DURING THE SILT REMOVAL PROCESS, THE CONTRACTOR SHALL IMMEDIATELY REPLACE AFTER DAMAGE OCCURS.

3. ACCEPTED TRIANGULAR SILT DIKE, MEASURED AS PROVIDED ABOVE, WILL BE PAID FOR AT THE CONTRACT UNIT PRICE BID FOR TRIANGULAR SILT DIKE. PRICE BID WILL INCLUDE THE COST OF FURNISHING THE DIKES, INSTALLING, MAINTAINING AND REMOVAL WHEN DIRECTED BY THE ENGINEER.

SYMBOLOGY

SYMBOL TO BE USED TO DENOTE DEVICE ON PLANS

NOTE: SILT DIKE SHOULD ONLY BE USED FOR DROP INLETS IN SUMP LOCATIONS.

DATE	REVISION	FILMED
7-26-12	REVISED GENERAL NOTE 2.	
12-15-11	ISSUED	

ARKANSAS STATE HIGHWAY COMMISSION

TEMPORARY EROSION CONTROL DEVICES

STANDARD DRAWING TEC-4

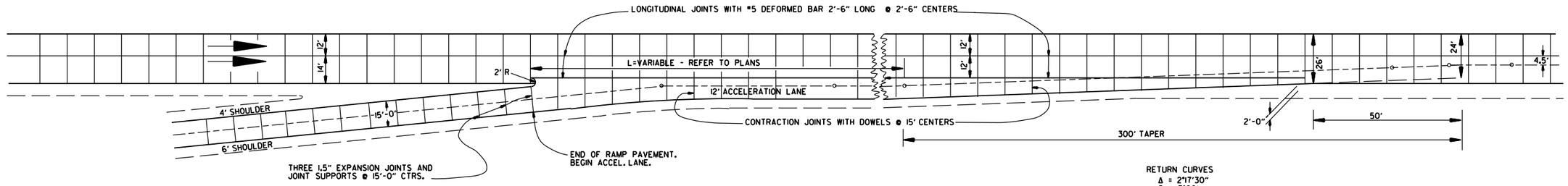

RETURN CURVES
Δ = 2°17'30"
D = 3°00'
T = 38.2'
L = 76.4'

ENTRANCE RAMP

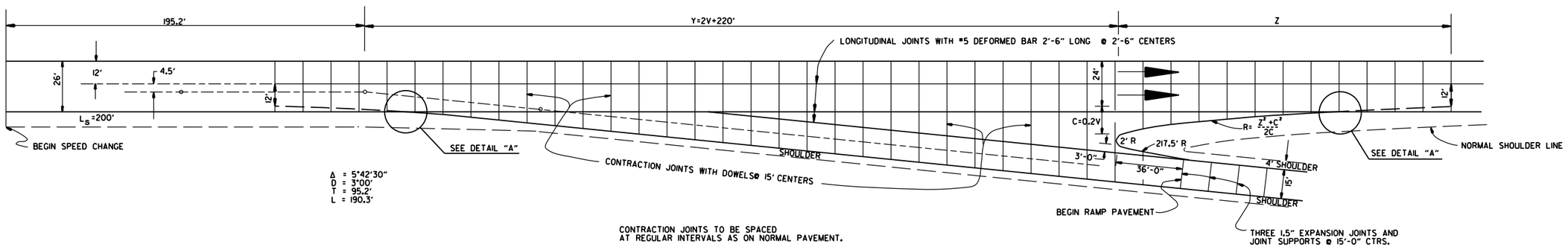

Δ = 5°42'30"
D = 3°00'
T = 95.2'
L = 190.3'

CONTRACTION JOINTS TO BE SPACED
AT REGULAR INTERVALS AS ON NORMAL PAVEMENT.

EXIT RAMP

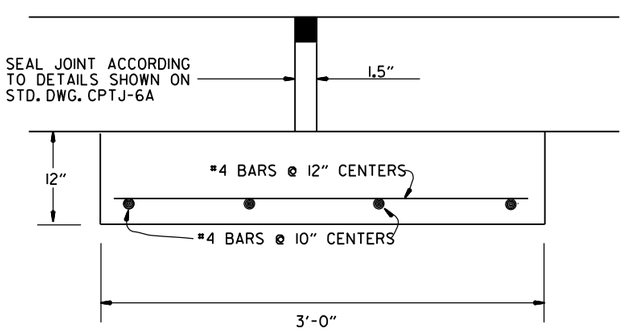

DETAIL OF EXPANSION JOINT & JOINT SUPPORT

NOTE: THE EXPANSION JOINTS SHALL BE MEASURED AND PAID FOR AS P.C.C. PAVEMENT (RAMP THICKNESS).
THE JOINT SUPPORT MAY BE CONSTRUCTED WITH CLASS "A", "S", OR PAVING CONCRETE. PAYMENT FOR THE JOINT SUPPORT SHALL BE FOR THE CONTRACT UNIT PRICE BID FOR THE CLASS OF CONCRETE USED. ALL OTHER WORK AND MATERIALS REQUIRED FOR THE CONSTRUCTION OF THE JOINT SUPPORT SHALL BE SUBSIDIARY TO THE ABOVE ITEMS.

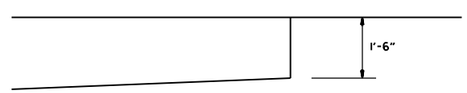

DETAIL "A"

EXIT RAMP

DESIGN SPEED V	X Y	NOSE OFFSET C	LENGTH NOSE TAPER Z	RETURN RADIUS R
40	300.0	8.0	96.0	580.0
50	320.0	10.0	120.0	725.0
60	340.0	12.0	168.0	1182.0
70	360.0	14.0	210.0	1582.0

DATE	REVISION	DATE FILM'D
1-12-00	REDRAWN & REISSUED	

ARKANSAS STATE HIGHWAY COMMISSION

DETAILS OF STANDARD TURNOUT FOR ENTRANCE & EXIT RAMPS

STANDARD DRAWING TR-1

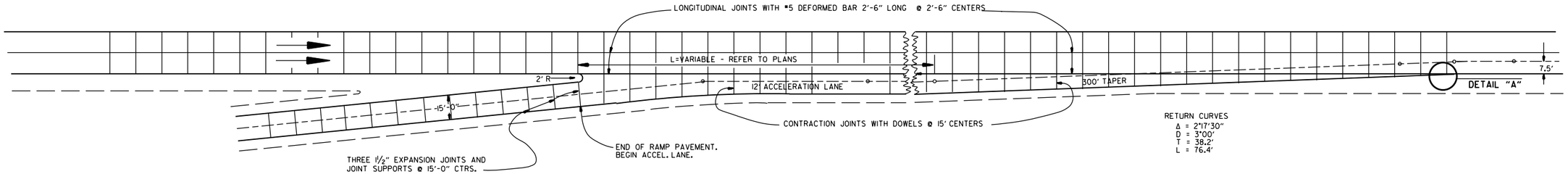

ENTRANCE RAMP

NOTE: JOINT SPACING ON THE MAIN LANES SHALL BE ADJUSTED AS NECESSARY TO CONFORM TO THESE JOINT LAYOUTS. THE MAIN LANE JOINT SPACING MAY BE REDUCED TO A 12' MINIMUM.

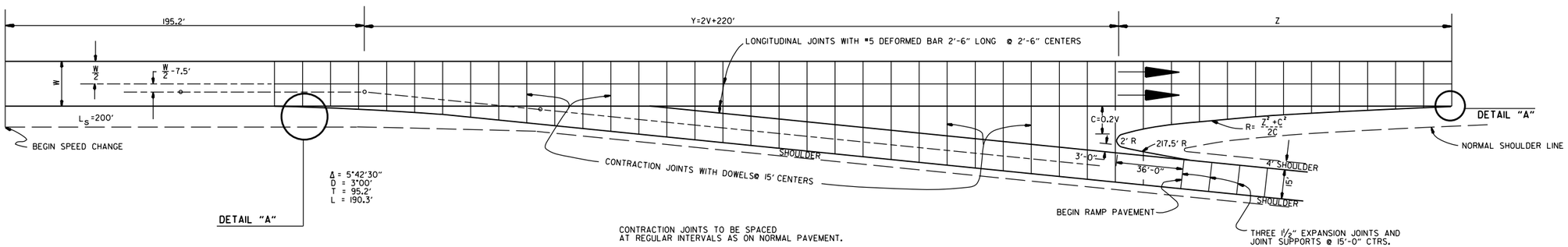

EXIT RAMP

EXIT RAMP

DESIGN SPEED V	X Y	NOSE OFFSET C	LENGTH NOSE TAPER Z	RETURN RADIUS R	ADDITIONAL SURFACING SQ. YDS.
40	300.0	8.0	96.0	580.0	602.43
50	320.0	10.0	120.0	725.0	687.29
60	340.0	12.0	168.0	1182.0	790.55
70	360.0	14.0	210.0	1582.0	902.27

DETAIL "A"

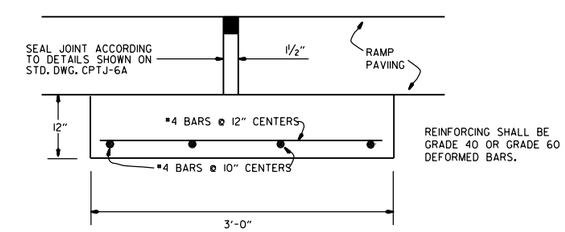

DETAIL OF EXPANSION JOINT & JOINT SUPPORT

NOTE: THE EXPANSION JOINTS SHALL BE MEASURED AND PAID FOR AS P.C.C. PAVEMENT (RAMP THICKNESS). WHEN RAMP PAVING IS ASPHALT, EXPANSION JOINT IS NOT REQUIRED.
THE JOINT SUPPORT MAY BE CONSTRUCTED WITH CLASS "A", "S", OR PAVING CONCRETE. PAYMENT FOR THE JOINT SUPPORT SHALL BE FOR THE CONTRACT UNIT PRICE BID FOR THE CLASS OF CONCRETE USED. ALL OTHER WORK AND MATERIALS REQUIRED FOR THE CONSTRUCTION OF THE JOINT SUPPORT SHALL BE INCLUDED IN THE PRICE BID FOR THE ABOVE ITEMS.

DATE	REVISION	DATE FILM'D
8-22-02	DELETED NOTE	
11-16-01	CORRECTED SPELLING ON ENTRANCE RAMP NOTE	
5-13-99	ADDED, EDITED AND DELETED NOTES	
11-03-94	ADDED NOTE RE: REINF. BARS	
10-1-92	ADDED DETAIL A & OTHER MINOR CHANGES	10-1-92
1-25-90	REVISED EXPANSION JOINT	1-25-90
7-15-88	CONFORM'D TO 1988 SPECIFICATIONS	65C-7-15-88
3-2-81	ISSUED	511-10-2-72

ARKANSAS STATE HIGHWAY COMMISSION

DETAILS OF STANDARD TURNOUT FOR ENTRANCE & EXIT RAMPS (NON-REINFORCED)

STANDARD DRAWING TR-1A

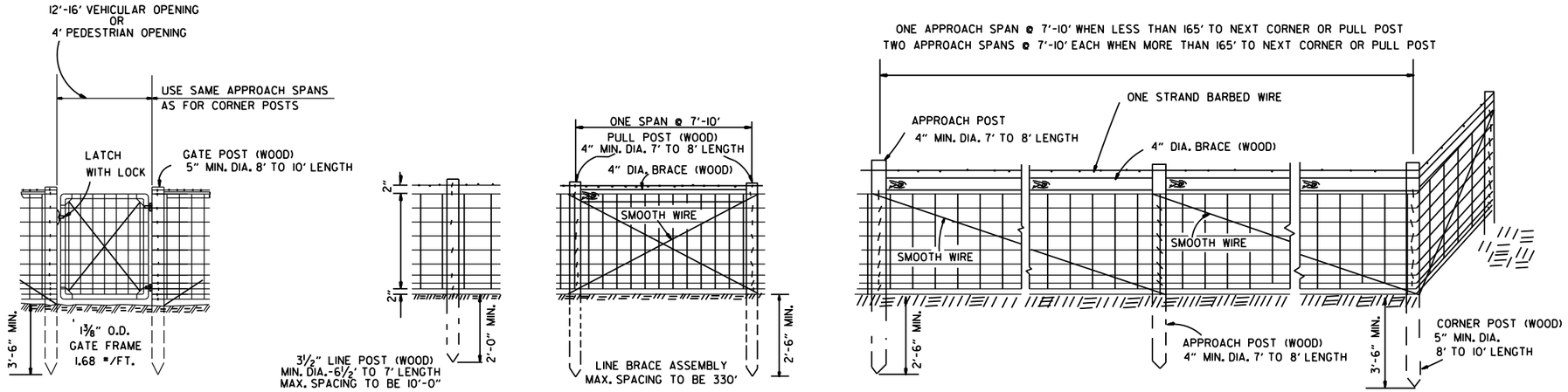

NOTE: STAPLE AT LEAST TOP, BOTTOM AND ALTERNATE WIRES OF WOVEN FABRIC FOR WOOD LINE POSTS.

TYPE A FENCE (WOOD POSTS)

GENERAL NOTES:

STEEL LINE POSTS SHALL BE GALVANIZED, 7 FT. IN LENGTH.

TUBULAR END, CORNER, PULL, OR DIAGONAL BRACES MUST CONFORM TO THE DIMENSIONS AND WEIGHTS SPECIFIED ON STANDARD DRAWING WF-3 (CHAIN LINK).

THE CONTRACTOR SHALL FURNISH AT LEAST 25% OF WOOD LINE POSTS OF 7' LENGTHS IN ORDER TO PROVIDE SUFFICIENT SET IN SOFT GROUND OR SMALL DEPRESSIONS.

GATE HINGES AND LATCHES WITH LOCKS TO BE OF A TYPE APPROVED BY THE ENGINEER. DRIVEWAY GATES, EITHER SINGLE 12' OR 16' OR DOUBLE 6' TO 8' OPENINGS OF THE SAME TYPE AS THE PEDESTRIAN GATE, SHALL BE INSTALLED ON THE RIGHT SIDE OF EACH THROUGH LANE ROAD AT LARGE CULVERTS OR BRIDGE CROSS FENCE FOR USE BY MAINTENANCE EQUIPMENT. LOCATION OF GATES TO BE SHOWN ON THE PLANS OR AS DESIGNATED BY THE ENGINEER.

AT STREAM CROSSINGS THE FENCE SHALL NOT BE CONSTRUCTED ACROSS LARGE STREAMS. WHERE CLEARANCE IS SUFFICIENT FROM THE TOP OF BANK TO THE BRIDGE STRUCTURE, A CROSS CONNECTION SHALL BE CONSTRUCTED BETWEEN THE FENCE ON EACH SIDE OF THE ROAD. WHERE THE CLEARANCE IS NOT SUFFIEICNT, THE FENCE SHALL BE TERMINATED WITH CROSS CONNECTIONS AND END POSTS ADJACENT TO THE BRIDGE ABUTMENTS OR CULVERT WINGWALLS.

SPLICE FOR WOVEN WIRE BETWEEN PULL POST SHALL BE BY THE "WESTERN UNION METHOD" AS DESCRIBED AS FOLLOWS: THE VERTICAL WIRES FOR EACH END OF THE FENCE FABRIC SHALL BE PLACED SIDE BY SIDE AND THE PROJECTING HORIZONTAL WIRES SHALL BE WRAPPED A MINIMUM OF 4 TIMES AROUND THE HORIZONTAL WIRES OF THE FIRST WEB.

SPLICE FOR BARBED WIRE BETWEEN PULL POST ASSEMBLY SHALL BE BY THE "EYE METHOD"; AS DESCRIBED AS FOLLOWS: THE ENDS OF THE BARBED WIRE SHALL BE BENT TO FORM A LOOP. THE LOOPS SHALL BE CONNECTED. AFTER THE LOOPS ARE CONNECTED THE ENDS OF THE WIRE SHALL BE WRAPPED AROUND THE PROJECTING WIRE A MINIMUM OF 4 TIMES FOR EACH WIRE LOOP.

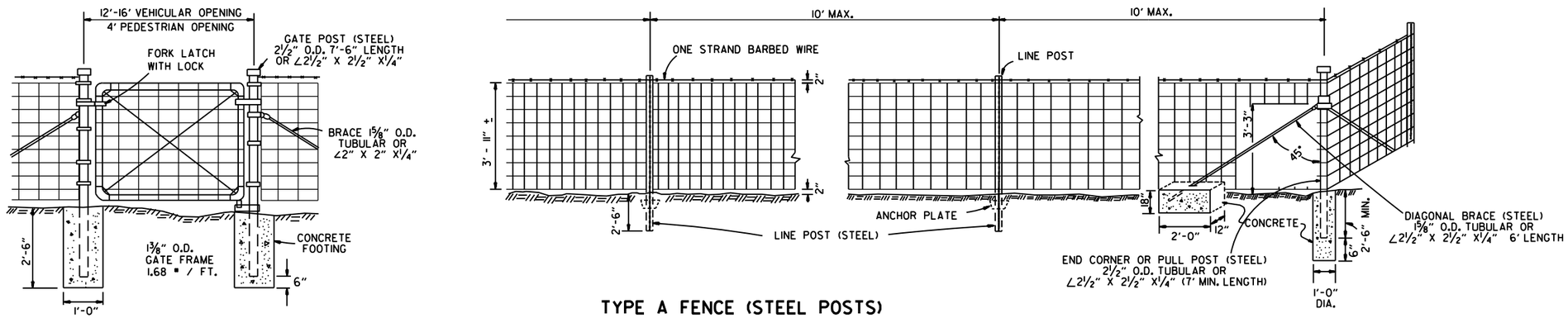

TYPE A FENCE (STEEL POSTS)

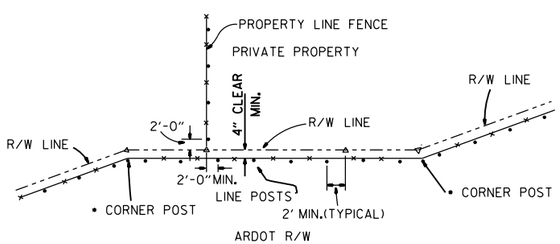

•NOTE: RIGHT-OF-WAY MONUMENTS SHALL NOT BE DISTURBED BY FENCE CONSTRUCTION. CORNER POSTS SHALL BE CONSTRUCTED 2' FROM THE RIGHT-OF-WAY MONUMENT OR AS DIRECTED BY THE ENGINEER.

△ - R/W MONUMENTS
• - FENCE POSTS

RIGHT-OF-WAY FENCE LOCATION

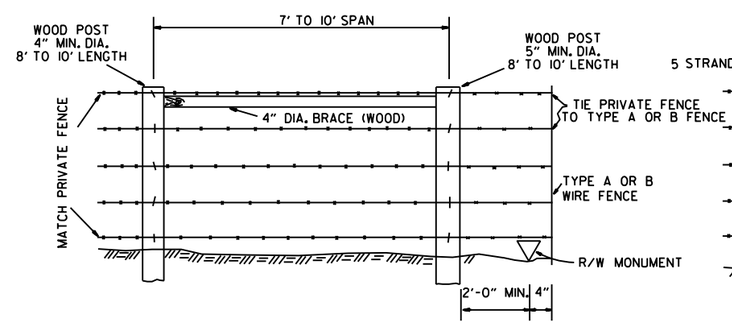

WHERE EXISTING PRIVATE FENCE CONSISTS OF STEEL POSTS, USE END POST ASSEMBLY AS SHOWN WITH TYPE A FENCE OR OTHER END POST ASSEMBLY AS APPROVED BY THE ENGINEER.

PRIVATE FENCE TERMINAL INSTALLATION

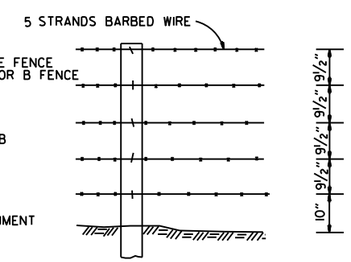

SPACING AND SIZE OF POSTS FOR TYPE B FENCE SHALL BE THE SAME AS TYPE A FENCE.

TYPE B FENCE

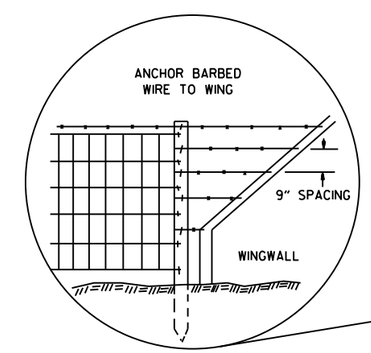

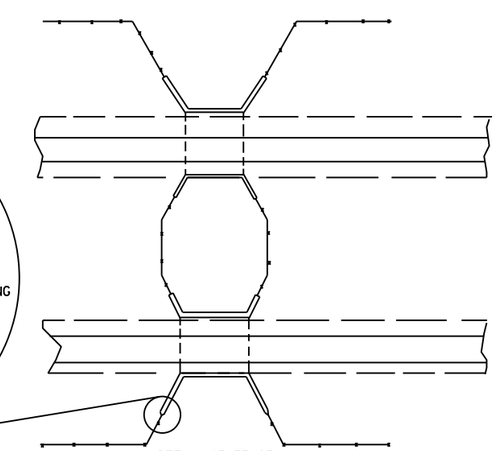

DETAIL OF FENCE CONSTRUCTION AT LARGE CULVERTS (5' IN HEIGHT AND OVER)

DATE	REVISION	DATE FILMED
8-22-02	REVISED GENERAL NOTES	
10-18-96	REVISED ASTM REF. TO AASHTO	
11-22-95	REVISED R-O-W LOCATION DETAIL	
6-2-94	ADDED CORNER POST NOTE	6-2-94
8-5-93	REVISED R-O-W LOCATION DETAIL	8-5-93
10-1-92	ADDED STAPLE NOTE	
8-2-90	REV'D PULL POST LENGTH	
11-30-89	DELETED CLASS CONC.	
7-15-88	ADDED SPLICE NOTES	
7-15-88	ADDED HEIGHT DIMENSION	
4-3-87	REVISED VARIOUS NOTES	
	AND GENERAL NOTES	
11-1-84	MAX. POST SPACING	
1-4-83	MIN. DIA. LINE POST	
10-2-72	REVISED & REDRAWN	

ARKANSAS STATE HIGHWAY COMMISSION

WIRE FENCE
TYPE A AND B

STANDARD DRAWING WF-1

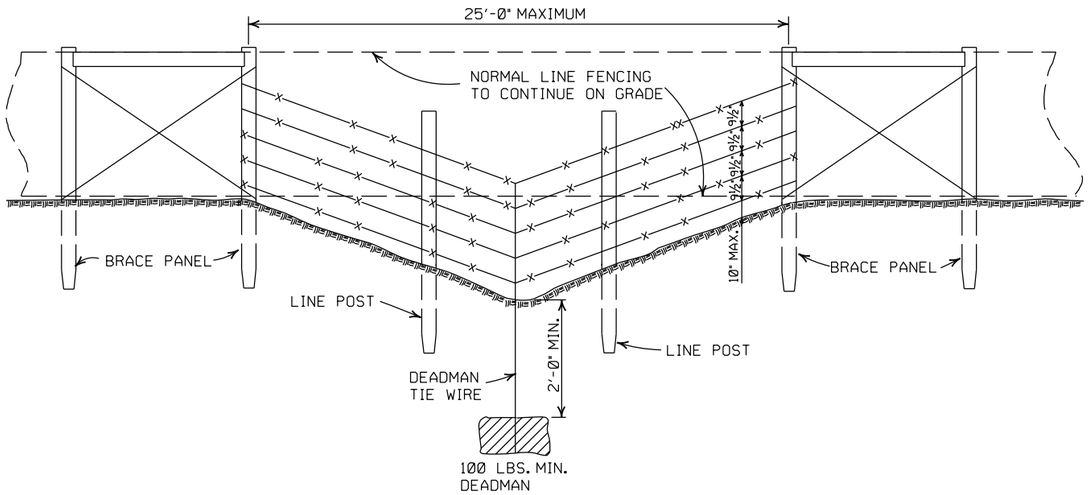

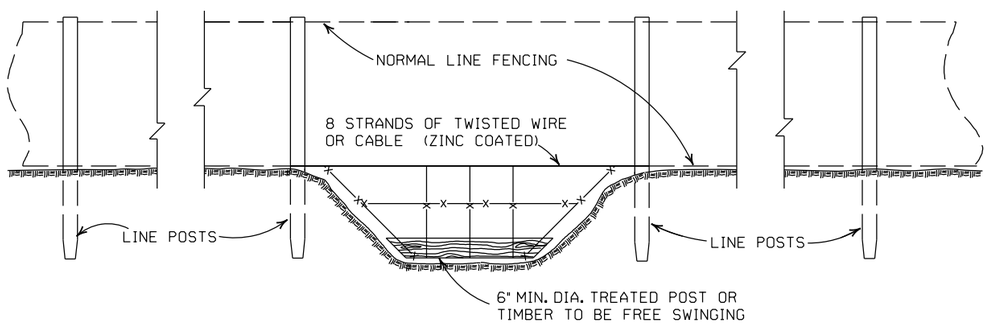

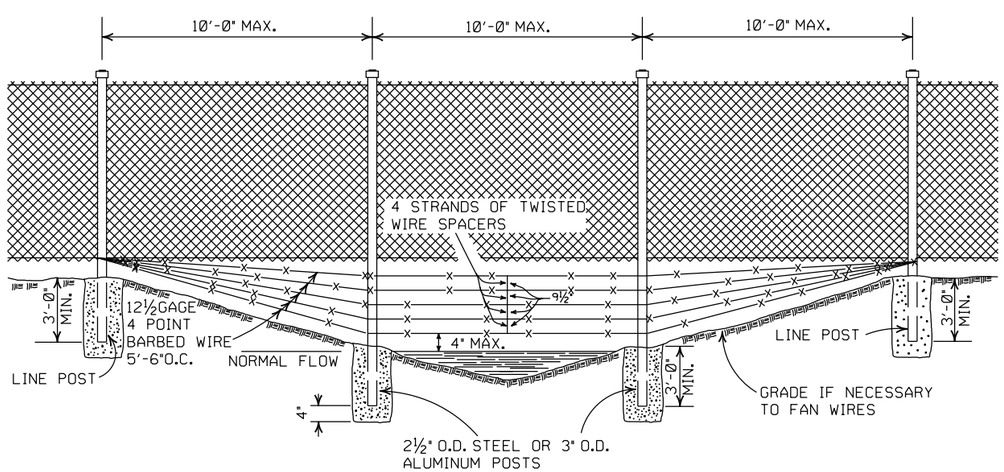

GENERAL NOTES:

THESE INSTALLATIONS TO BE USED WHERE NORMAL FENCING INSTALLATION WOULD CAUSE THE COLLECTING OF DRIFT IN THE CHANNEL OR THE DEPRESSION WILL NOT PERMIT NORMAL INSTALLATION. INSTALLATIONS WILL BE MADE ONLY WHERE DIRECTED BY THE ENGINEER.

WHEN A FENCE LINE APPROACHES A DITCH, GULLY OR DEPRESSION, THE LAST POST ON LEVEL GROUND SHALL BE PLACED CLOSE ENOUGH TO THE EDGE OF THE DROP OFF THAT THE FENCE MAY BE STRUNG TO THE POST IN THE DEPRESSION WITHOUT TOUCHING THE GROUND.

IN TERRAIN OF SUCH EXTREME IRREGULARITY THAT MINOR GRADING WILL NOT BE FEASIBLE, THE NORMAL FENCE SHALL CONTINUE ON GRADE AND THE GULLIES OR DEPRESSIONS TREATED BY AUXILIARY FENCES AS SHOWN.

PAYMENT FOR THE TYPE INSTALLATION USED WILL NOT BE MADE DIRECTLY BUT WILL BE INCLUDED IN THE CONTRACT UNIT PRICE BID FOR WIRE FENCE OR CHAIN LINK FENCE.

DATE	REVISION	FILMED
4-20-79	REVISED TOP RAIL & TENSION WIRE	696-4-20-79
10-2-72	REVISED AND REDRAWN	529-10-2-72

ARKANSAS STATE HIGHWAY COMMISSION

WIRE FENCE WATER GAPS

STANDARD DRAWING WF-2

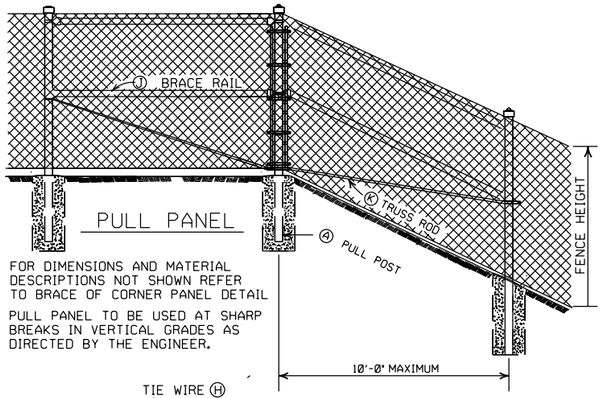

PULL PANEL

NOTE: FOR DIMENSIONS AND MATERIAL DESCRIPTIONS NOT SHOWN REFER TO BRACE OF CORNER PANEL DETAIL

PULL PANEL TO BE USED AT SHARP BREAKS IN VERTICAL GRADES AS DIRECTED BY THE ENGINEER.

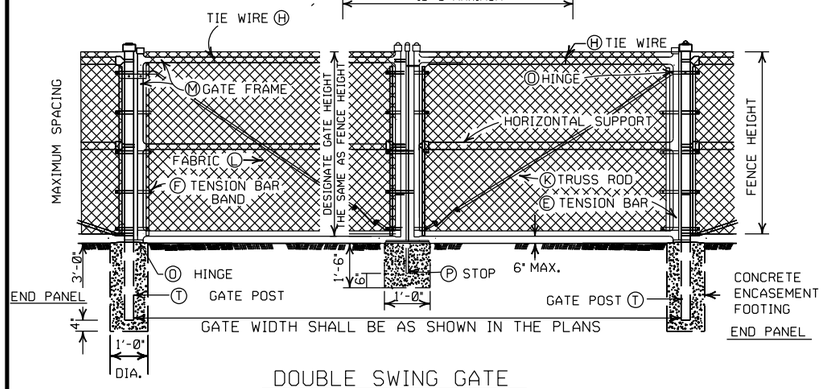

DOUBLE SWING GATE

POST SPACING DETAIL

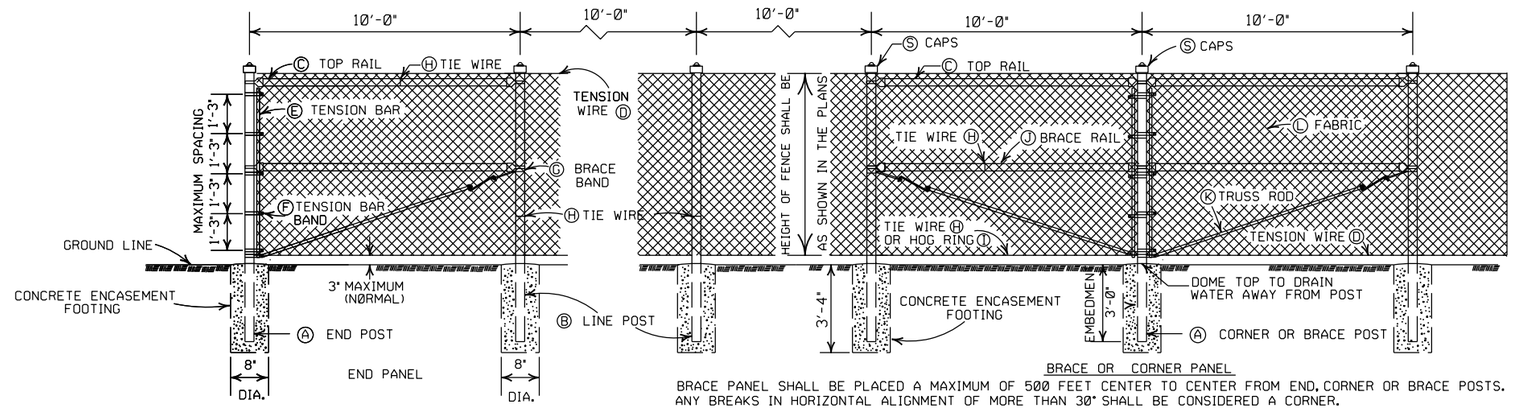

BRACE OR CORNER PANEL

BRACE PANEL SHALL BE PLACED A MAXIMUM OF 500 FEET CENTER TO CENTER FROM END, CORNER OR BRACE POSTS. ANY BREAKS IN HORIZONTAL ALIGNMENT OF MORE THAN 30° SHALL BE CONSIDERED A CORNER.

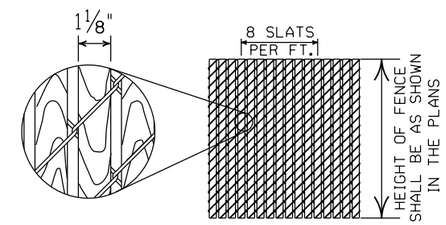

1⅛" X ¼" REDWOOD SLATS(LENGTH TO MATCH HEIGHT OF FENCE)

DETAIL OF REDWOOD SLAT INSTALLATION

(WHERE APPLICABLE)

GENERAL NOTES:

(C) CHAIN LINK FENCE BEING PLACED ON PRIVATE PROPERTY SHALL INCLUDE A TOP RAIL. ALL LABOR, MATERIALS, EQUIPMENT, TOOLS, AND INCIDENTALS NECESSARY TO COMPLETE THE WORK WILL BE PAID FOR AT THE CONTRACT UNIT PRICE BID PER LIN. FT. OF CHAIN LINK FENCE.

(D) TENSION WIRE: SHALL BE SECURED TO ALL TERMINAL, PULL, BRACE OR CORNER POSTS WITH TENSION BAR BANDS.

(J) BRACE RAIL: BRACE RAILS SHALL BE PROVIDED AT ALL TERMINAL, PULL, BRACE OR CORNER POSTS HALFWAY BETWEEN THE TOP RAIL AND GROUND LEVEL WHEN TOPRAIL IS SPECIFIED AND TWELVE INCHES (12") DOWN FROM TOP OF FABRIC WHEN TOP TENSION WIRE IS SPECIFIED. BRACE RAIL SHALL EXTEND FROM SUCH POST TO THE FIRST ADJACENT LINE POST.

(L) FABRIC: SHALL CONFORM TO THE SPECIFICATIONS.

(M) GATE FRAMES: SHALL BE CONSTRUCTED OF TUBULAR MEMBERS ASSEMBLED BY USE OF HEAVY PRESSED STEEL, MALLEABLE FITTINGS OR BY WELDING. ALL GATES SHALL HAVE ONE HORIZONTAL SUPPORT EXTENDING THE WIDTH OF THE GATE AT THE MIDPOINTS OF VERTICAL FRAME MEMBERS. THE COMPLETE FRAME SHALL BE RIGID AND HAVE AMPLE STRENGTH TO BE FREE FROM SAG AND TWIST.

(O) HINGES: SHALL BE OF HEAVY PATTERN, OF ADEQUATE STRENGTH FOR GATE, AND WITH LARGE BEARING SURFACES FOR CLAMPING IN POSITION. THE HINGE SHALL BE OF THE PROPER TYPE TO ALLOW FOR THE DESIGNATED DEGREE OF SWING. THE HINGE SHALL NOT TWIST OR TURN UNDER THE ACTION OF THE GATE. THE GATES SHALL BE CAPABLE OF BEING OPENED AND CLOSED EASILY BY ONE PERSON.

(P) LATCHES AND STOPS: SHALL BE PROVIDED FOR ALL GATES. GATES SHALL HAVE A DROP BAR LATCH. LATCHES SHALL BE ARRANGED FOR LOCKING. THE STOP FOR DROP BAR LATCHES SHALL BE SET IN CONCRETE AND ENGAGE THE PLUNGER OF THE BAR LATCH.

(S) CAPS: ALL POSTS, EXCEPT ROLL FORMED POSTS AND "T" POSTS SHALL BE CAPPED OVER THE EXTERIOR OF THE POST, AND SHALL CONFORM TO ASTM F626.

CONCRETE REQUIRED FOR THE EMBEDMENT OF ALL POSTS SHALL NOT BE PAID FOR DIRECTLY BUT SHALL BE INCLUDED IN THE CONTRACT UNIT PRICE BID FOR CHAIN LINK FENCE.

POSTS SHALL BE SPACED EQUIDISTANT ON A MAXIMUM OF 10' CENTERS.

EXCAVATION FOR POSTS: IN OTHER THAN ROCK SHALL BE OF THE DIMENSIONS INDICATED. IF ROCK IS ENCOUNTERED BEFORE REACHING THE REQUIRED DEPTH, THE EXCAVATION SHALL BE CONTINUED TO THE DEPTH INDICATED OR 1'-6" INTO THE ROCK, WHICHEVER IS LESS, AND SHALL BE A MINIMUM OF 8 INCHES IN DIAMETER.

HEIGHT OF FENCE FABRIC	(A) END, PULL, CORNER OR BRACE POST	(B) LINE POSTS		(C) TOP RAIL			(D) TENSION WIRE		(E) TENSION BAR		(F) TENSION BAR BAND			(G) BRACE BAND	
		SIZE	TIE SPACING	SIZE	TIE SPACING	MIN. LENGTH	SIZE	TIE SPACING	SIZE	LENGTH	SIZE	BOLT SIZE	SPACING	SIZE	BOLT SIZE
6' AND LESS	2½" O.D.	2" O.D.	1 TIE EVERY 1'-2" OF FABRIC HEIGHT	1⅝" O.D.	1 TIE EVERY 2'-0"	10'-0"	7 GAUGE COIL SPRING WIRE	1 TIE EVERY 1'-0"	MIN. OF 3/16" X ¾"	MIN. OF 2" LESS THAN FABRIC HEIGHT	MIN. OF ¾" X 0.074	5/16" X 1¼"	1 BAND AT TOP AND BOTTOM 15" MAX. INTERVAL BETWEEN BANDS	MIN. OF ¾" X 0.105	5/16" X 1¼"
OVER 6' TO 12' INCL.	3 " O.D.	2½" O.D.													

HEIGHT OF FENCE FABRIC	(H) TIE WIRE	(I) HOG RING	(J) BRACE RAIL		(K) TRUSS ROD	(L) FABRIC			(M) GATE FRAME		(N) HORIZONTAL SUPPORT		(O) HINGE TYPE 180° SWING	(T) GATE POST	
			SIZE	TIE SPACING		SIZE	MESH	SELVAGE	SIZE	TIE SPACING	SIZE	TIE SPACING		GATE WIDTH 12' AND LESS	GATE WIDTH OVER 12' TO 24' INCL.
6' AND LESS	MIN. OF 12 GA. STEEL OR 9 GA. ALUM.	SAME GAUGE AS FABRIC	1⅝" O.D.	1 TIE EVERY 2'-0"	MIN. OF 5/16" ROUND WITH TIGHTNERS AND FITTINGS	9 GA.	2"	KNUCK-ING AND/OR TWIST-ING	2" O.D.	1 TIE EVERY 1'-0"	2" O.D.	1 TIE EVERY 1'-0"	OFFSET	3" O.D.	4" O.D.
OVER 6' TO 12' INCL.														4" O.D.	

NOTE: POST SIZES SHOWN ARE FOR STEEL. WHERE ALUMINUM IS PROVIDED, LINE POSTS SHALL HAVE AN OUT SIDE DIAMETER OF 2½" FOR FENCE HEIGHT OF 6' AND LESS, AN OUTSIDE DIAMETER OF 3" FOR FENCE HEIGHT OF 6' TO 12'. END, PULL, CORNER OR BRACE POSTS SHALL HAVE AN OUTSIDE DIAMETER OF 3" FOR FENCE HEIGHT OF 6' AND LESS; AN OUTSIDE DIAMETER OF 3½" FOR FENCE HEIGHTS OF 6' TO 12'. GATE POSTS WHERE GATE WIDTH IS 12' AND LESS SHALL HAVE AN OUTSIDE DIAMETER OF 3½" FOR FENCE HEIGHT OF 6' AND LESS. ALUMINUM TENSION WIRE SHALL BE 0.192" IN DIAMETER. MINIMUM THICKNESS OF MATERIAL FROM WHICH EXPANSION SLEEVES SHALL BE MADE WILL BE 0.078". POSTS AND RAILS MAY HAVE ANY CROSS-SECTIONAL SHAPE THAT WILL MEET THE SPECIFICATIONS.

OTHER DETAILS APPLY TO BOTH STEEL AND ALUMINUM FENCE.

ALL MISCELLANEOUS FITTINGS AND HARDWARE SHALL MEET THE REQUIREMENTS AND PRODUCTION TOLERANCES AS SET FORTH IN THE SPECIFICATIONS. 9 GAUGE ALUMINUM WIRE SHALL BE ACCEPTABLE FOR TIEING FABRIC TO TUBULAR AND ROLL FORMED MEMBERS OF STEEL FENCE.

POSTS AND RAILS

SIZE O.D.	GRADE 1 AND ALUMINUM ALLOY				GRADE 2		
	O.D. INCHES	WALL THICKNESS	LBS. PER LINEAR FT. STEEL	LBS. PER LINEAR FT. ALUMINUM	O.D. INCHES	WALL THICKNESS	LBS. PER LINEAR FT.
1⅝	1.660	0.140	2.27	0.786	1.660	0.111	1.84
2	1.900	0.145	2.72	0.940	1.900	0.120	2.28
2½	2.375	0.154	3.65	1.264	2.375	0.130	3.11
3	2.875	0.203	5.79	2.004	2.875	0.160	4.64
3½	3.500	0.216	7.58	2.621	3.500	0.160	5.71
4	4.000	0.226	9.11	3.151	4.000	0.160	6.56

TOLERANCES ON DIMENSIONS AND WEIGHTS ACCORDING TO AASHTO M 181

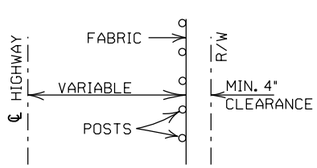

INSTALLATION MAY BE MODIFIED AS SHOWN IN THE PLANS

TYPICAL INSTALLATION DIAGRAM

DATE	REVISION	FILMED
11-17-10	REVISED TRUSS ROD	
12-10-09	REVISED POSTS & RAILS TABLE	
5-21-09	ADDED TABLE & GEN. NOTE (C)	
8-22-02	REVISED NOTES, REMOVED TABLE, & REMOVED FENCE ALTERNATE	
4-3-97	REVISED BRACE RAIL NOTE	
10-18-96	REVISED AASHTO & ASTM REF.	
11-3-94	REVISED NOTE (L)	
10-1-92	DELETED ALTERNATE POST	10-1-92
8-15-91	DELETED ROLL FORMED POST	8-15-91
	DETAIL & ADDED NOTE	8-15-91
11-30-89	DELETED CLASS CONCRETE	11-30-89
11-17-88	REVISED O.D. SIZES	668-11-17-88
10-30-87	GENERAL REVISIONS	548-10-30-87
4-20-79	REVISED TOP RAIL & TENSION WIRE	695-4-20-79
10-2-72	REVISED AND REDRAWN	530-10-2-72

ARKANSAS STATE HIGHWAY COMMISSION

CHAIN LINK FENCE

STANDARD DRAWING WF-3

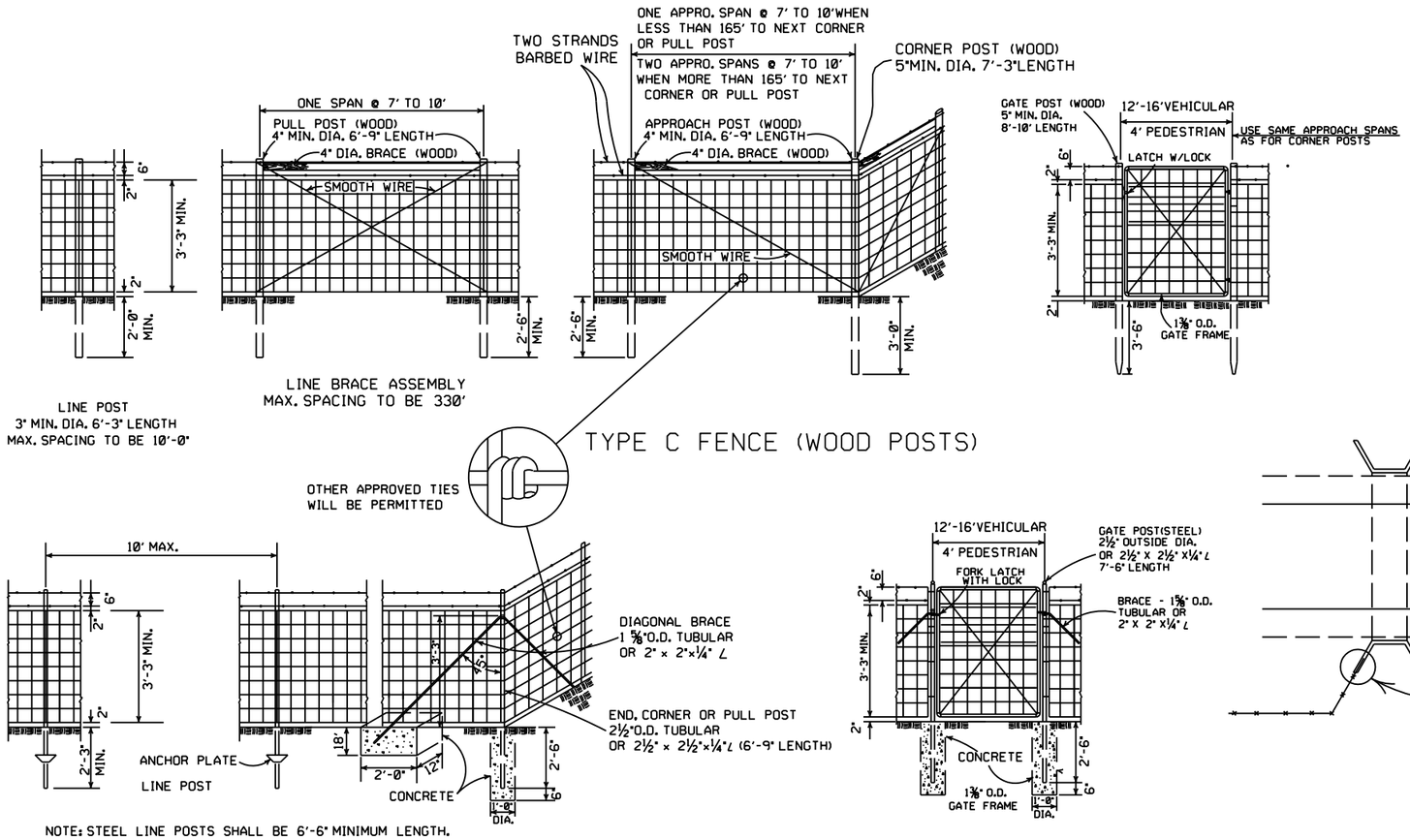

TYPE C FENCE (WOOD POSTS)

TYPE C FENCE (STEEL POSTS)

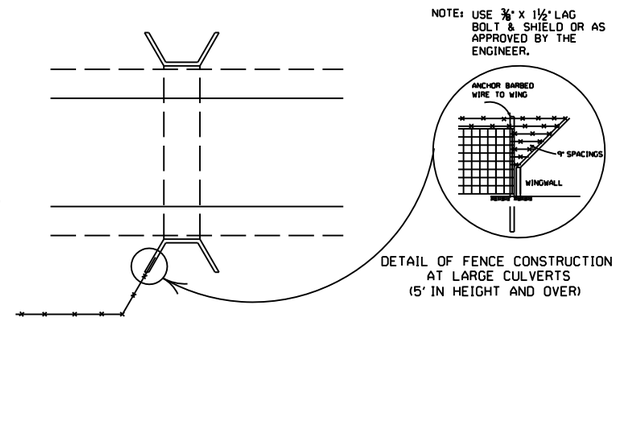

GENERAL NOTES:

STEEL LINE POSTS SHALL BE PAINTED OR GALVANIZED.
TUBULAR END, CORNER, PULL, OR DIAGONAL BRACES MUST CONFORM TO THE DIMENSIONS AND WEIGHTS SPECIFIED ON STANDARD DRAWING WF-3 (CHAIN LINK). APPROVED ALTERNATES ARE ACCEPTABLE.
AN ACCEPTABLE TOLERANCE IN LENGTH OF TUBULAR OR WOODEN POSTS SHALL BE - 1" TO +2".
TUBULAR POSTS MUST BE PAINTED OR GALVANIZED.

THE CONTRACTOR SHALL FURNISH AT LEAST 25% OF TIMBER LINE POSTS OF 7 FOOT LENGTHS IN ORDER TO PROVIDE SUFFICIENT SET IN SOFT GROUND OR SMALL DEPRESSIONS.

DRIVEWAY GATES, EITHER SINGLE 12' TO 16' OR DOUBLE 6' TO 8' OPENING OF THE SAME TYPE AS THE PEDESTRIAN GATE, SHALL BE INSTALLED ON THE RIGHT SIDE OF EACH THROUGH LANE ROAD AT LARGE CULVERTS OR BRIDGE CROSS FENCE, FOR USE OF MAINTENANCE EQUIPMENT. LOCATION OF GATES TO BE SHOWN ON PLANS OR AS DESIGNATED BY THE ENGINEER.

AT STREAM CROSSINGS, THE FENCE SHALL NOT BE CONSTRUCTED ACROSS LARGE STREAMS. WHERE CLEARANCE IS SUFFICIENT FROM THE TOP OF THE BANK TO THE BRIDGE STRUCTURE A CROSS CONNECTION SHALL BE CONSTRUCTED BETWEEN THE FENCE ON EACH SIDE OF THE ROAD. WHERE THE CLEARANCE IS NOT SUFFICIENT, THE FENCE SHALL BE TERMINATED WITH CROSS CONNECTIONS AND END POSTS ADJACENT TO BRIDGE ABUTMENTS OR CULVERT WINGWALLS.

SPLICE FOR BARBED WIRE BETWEEN PULL POST ASSEMBLY SHALL BE BY THE "EYE METHOD" AS DESCRIBED AS FOLLOWS:
THE ENDS OF THE BARBED WIRE SHALL BE BENT TO FORM A LOOP. THE LOOPS SHALL BE CONNECTED. AFTER THE LOOPS ARE CONNECTED THE ENDS OF THE WIRE SHALL BE WRAPPED AROUND THE PROJECTING WIRES A MINIMUM OF 4 TIMES FOR EACH WIRE LOOP.

SPLICE FOR WOVEN WIRE BETWEEN PULL POST SHALL BE BY THE "WESTERN UNION METHOD" AS DESCRIBED AS FOLLOWS: THE VERTICAL WIRES FOR EACH END OF THE FENCE FABRIC SHALL BE PLACED SIDE BY SIDE AND THE PROJECTING HORIZONTAL WIRES SHALL BE WRAPPED A MINIMUM OF 4 TIMES AROUND THE HORIZONTAL WIRES OF THE FIRST WEB.

STAPLE AT LEAST TOP, BOTTOM AND ALTERNATE WIRES OF WOVEN FABRIC FOR WOOD LINE POSTS.

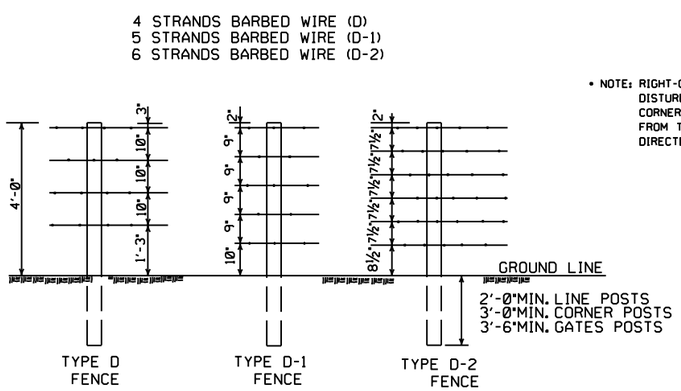

NOTE: SPACING AND SIZE (EXCEPT LENGTH) OF POSTS, APPROACH SPANS, PULL POST ASSEMBLIES, AND CORNER BRACING FOR TYPE D FENCE SHALL CONFORM TO TYPE C FENCE. USE GALVANIZED STAPLES ON WOOD POSTS AND APPROVED FASTENERS ON STEEL POSTS.

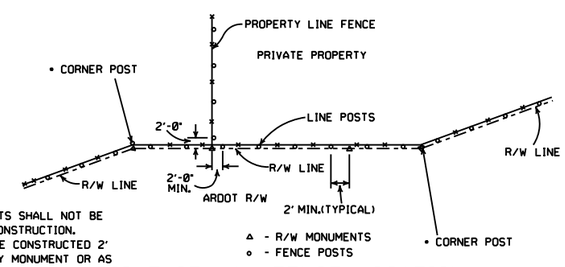

• NOTE: RIGHT-OF-WAY MONUMENTS SHALL NOT BE DISTURBED BY FENCE CONSTRUCTION. CORNER POSTS SHALL BE CONSTRUCTED 2' FROM THE RIGHT-OF-WAY MONUMENT OR AS DIRECTED BY THE ENGINEER.

RIGHT-OF-WAY FENCE LOCATION

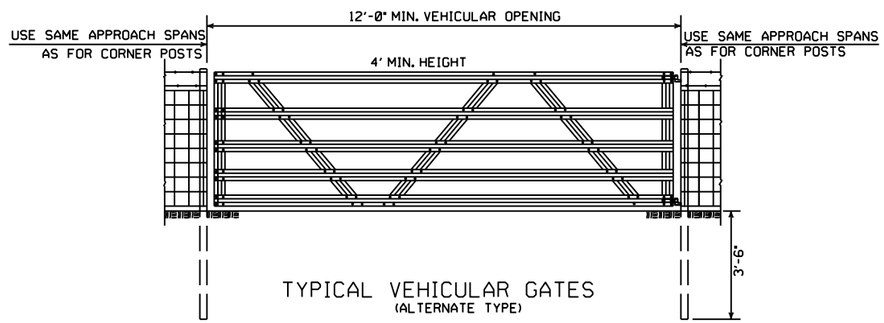

TYPICAL VEHICULAR GATES
(ALTERNATE TYPE)

OTHER STYLE VEHICULAR GATES MAY BE USED WITH THE APPROVAL OF THE ENGINEER.
THE METHOD OF SECURING GATE (LATCH AND/OR LOCK) SHALL MEET THE APPROVAL OF THE ENGINEER.

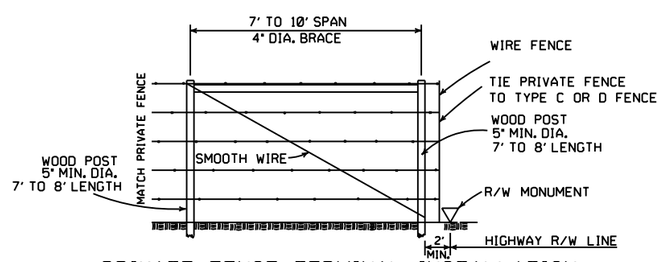

PRIVATE FENCE TERMINAL INSTALLATION
WHERE EXISTING FENCE CONSISTS OF STEEL POSTS, USE END POST ASSEMBLY AS SHOWN IN TYPE C FENCE OR OTHER END POST ASSEMBLY AS APPROVED BY THE ENGINEER.

DATE	REVISION	FILMED
8-22-02	REVISED GENERAL NOTES	
10-18-96	REVISED AASHTO	
11-22-95	REVISED R-O-W LOCATION DETAIL	
6-2-94	REVISED BARB WIRE AND ADDED CORNER POST NOTES	6-2-94
8-5-93	REVISED R/W INSTALLATION FENCE	8-5-93
10-1-92	ADDED STAPLE NOTE	10-1-92
8-15-91	ADDED TYPE D-2 FENCE	8-15-91
11-30-89	DELETED CLASS CONCRETE	11-30-89
7-15-88	ADDED SPLICE NOTE	700-7-15-88
10-30-87	GENERAL REVISIONS	549-10-30-87
11-1-84	MAX. POST SPACING MIN. WIRE GAUGE	507-11-1-84
1-4-83	MIN. DIA. LINE POST	648-1-4-83
3-2-81	TOLERANCE FOR POST LENGTH	722-3-2-81
12-1-72	ADDED D-1 & FENCE INSTALLATION	564-12-1-72
10-2-72	REVISED AND REDRAWN	540-10-2-72

ARKANSAS STATE HIGHWAY COMMISSION

WIRE FENCE TYPE C AND D

STANDARD DRAWING WF-4

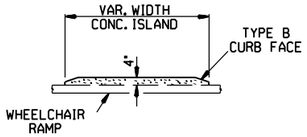

CONCRETE ISLAND DETAIL

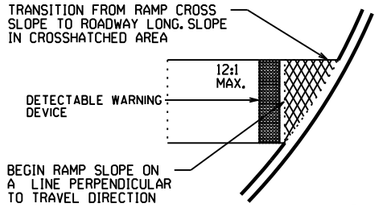

SLOPE TRANSITION DETAILS

TYPE 1 RAMP DIMENSIONS AND QUANTITIES

RADIUS "R"	DISTANCE "X"	DISTANCE "Y"	LENGTH "L"	RAMP AREA "A"
FEET	FEET	FEET	FEET	SQ. YD.
15	11.67	18.82	32.18	26.21
20	11.52	22.28	35.46	30.07
25	11.43	26.60	38.77	33.80
30	11.37	30.26	40.93	36.90
35	11.33	33.51	43.11	39.77
40	11.30	36.45	45.26	42.45
45	11.27	39.16	47.34	44.97
50	11.25	41.69	49.36	47.35
55	11.24	44.07	51.31	49.63
60	11.22	46.33	53.21	51.80

GENERAL NOTES FOR DETECTABLE WARNING DEVICES

THE DETECTABLE WARNING DEVICE SHALL BE LOCATED SO THAT THE NEAREST EDGE OF THE DEVICE IS 6 TO 8 INCHES FROM THE FACE OF THE CURB.
TRUNCATED DOMES IN THE DETECTABLE WARNING SURFACE SHALL MEET THE REQUIREMENTS OF THE GEOMETRIC CONFIGURATION SHOWN.
DOMES SHALL BE ALIGNED ON A SQUARE GRID IN THE PREDOMINANT DIRECTION OF TRAVEL TO PERMIT WHEELS TO ROLL BETWEEN DOMES.
DETECTABLE WARNING DEVICE SHALL BE 24 INCHES IN THE DIRECTION OF TRAVEL AND EXTEND THE FULL WIDTH OF THE CURB RAMP OR FLUSH SURFACE.
DETECTABLE WARNING DEVICE SHALL BE ON THE ARDOT QUALIFIED PRODUCTS LIST FOR CAST-IN-PLACE TACTILE PANELS (ADA DETECTABLE WARNING).

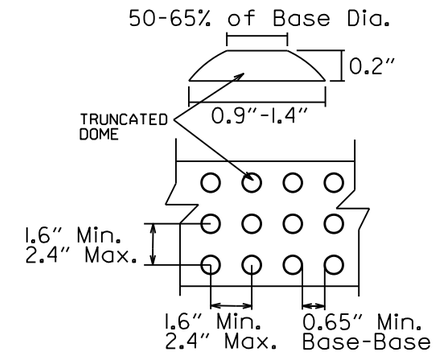

DETECTABLE WARNING DEVICE DETAIL

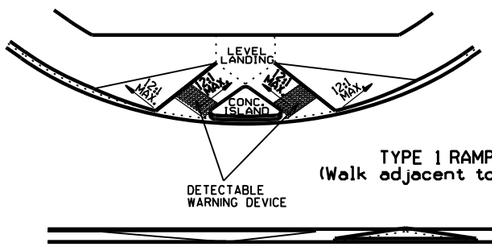

TYPE 1 RAMP
(Walk adjacent to curb)

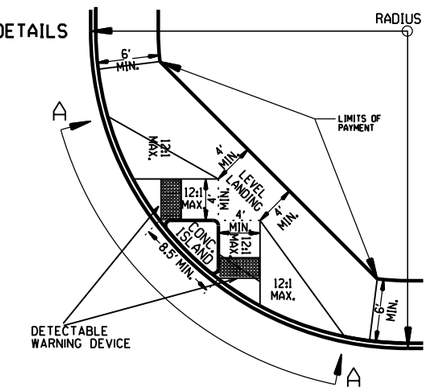

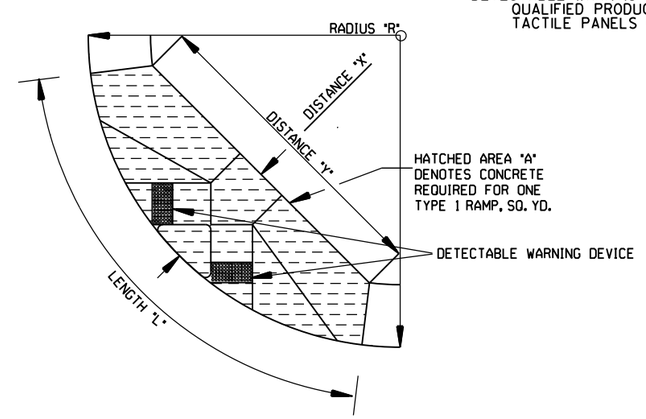

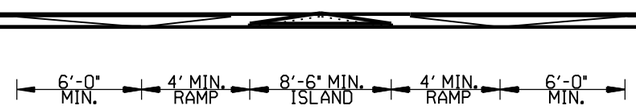

SECTION A-A

GENERAL NOTES:

IN NEW CONSTRUCTION, UNLESS OTHERWISE INDICATED ON THE PLANS, WHEELCHAIR RAMPS ARE TO BE PROVIDED AT ALL CORNERS OF CURBED STREET INTERSECTIONS AND MID-BLOCK CROSSWALK LOCATIONS.
IN ALTERATIONS WHEELCHAIR RAMPS ARE TO BE PROVIDED AT CURBED STREET INTERSECTIONS WITH PEDESTRIAN TRAFFIC AND MID-BLOCK CROSSWALK LOCATIONS.
THE LENGTH OF THE RAMP SHALL BE SUCH THAT THE SLOPE DOES NOT EXCEED 12:1. THE SURFACE TEXTURE OF THE RAMP SHALL CONFORM TO A CLASS 6 FINISH ACCORDING TO SECTION 802.19.
THE NORMAL GUTTER GRADE SHALL BE MAINTAINED THROUGH THE AREA OF THE RAMP.
ALL PAVEMENT MARKINGS SHALL BE IN ACCORDANCE WITH THE LATEST EDITION OF THE MANUAL OF UNIFORM TRAFFIC CONTROL DEVICES PUBLISHED BY THE FEDERAL HIGHWAY ADMINISTRATION.
THE MINIMUM THICKNESS OF THE RAMP, WALK, & LANDING SHALL BE 4".
THE MINIMUM WIDTH OF THE RAMPS SHALL BE THE WALK WIDTH OR 36", WHICHEVER IS GREATER.
RAMPS SHALL BE MODIFIED AS NECESSARY TO INSURE THAT THEY ARE PARALLEL TO A LINE DRAWN FROM THE CENTER OF ONE RAMP TO THE CENTER OF THE RAMP ON THE OPPOSITE SIDE OF THE INTERSECTION.
THE DIMENSIONS AND QUANTITIES SHOWN ON THIS DRAWING ARE FOR A 90° INTERSECTION ONLY. DIMENSIONS AND QUANTITIES FOR SKEWED INTERSECTIONS WILL VARY, AND ARE TO BE DETERMINED BY THE ENGINEER.

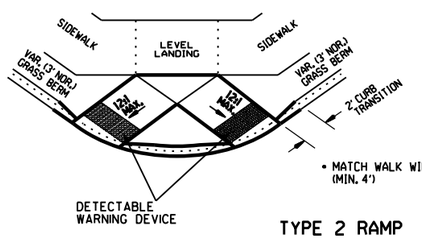

TYPE 2 RAMP

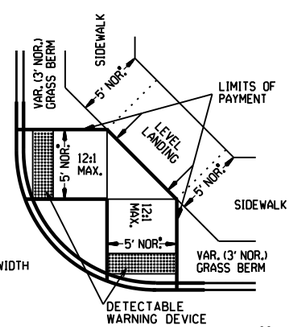

NOTE:
THE CROSS SLOPE OF THE RAMPS, LEVEL LANDINGS, AND SIDEWALKS SHALL NOT EXCEED 2.0% UNLESS REQUIRED TO MATCH STREET LONGTITUDINAL GRADE.

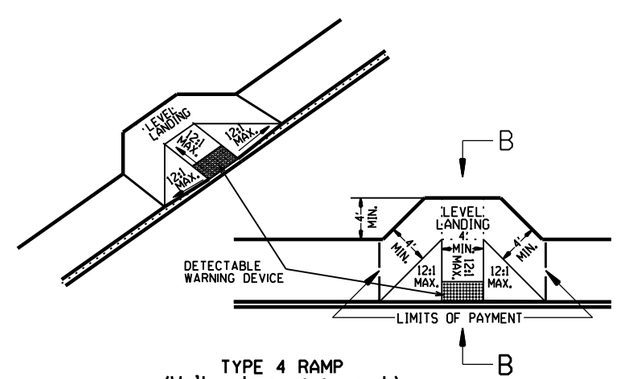

TYPE 4 RAMP
(Walk adjacent to curb)

RAMP SELECTION CRITERIA

FIRST CHOICE	TYPE 1	CORNER LOCATIONS WITH THE WALK ADJACENT TO THE CURB (BOTH NEW CONSTRUCTION AND ALTERATIONS).
	TYPE 2	CORNER LOCATIONS WITH THE WALK OFFSET FROM THE CURB A DISTANCE INSUFFICIENT TO ALLOW THE REQUIRED RAMP SLOPE (BOTH NEW CONSTRUCTION AND ALTERATIONS).
	TYPE 3	CORNER LOCATIONS WITH THE WALK OFFSET FROM THE CURB A DISTANCE SUFFICIENT TO ALLOW THE REQUIRED RAMP SLOPE (BOTH NEW CONSTRUCTION AND ALTERATIONS).
	TYPE 4	TANGENT LOCATIONS (BOTH NEW CONSTRUCTION AND ALTERATIONS).
SECOND CHOICE	TYPE 5	TANGENT LOCATIONS (ALTERATIONS ONLY).
THIRD CHOICE	TYPE 6	CORNER LOCATIONS (ALTERATIONS ONLY). THIS RAMP MAY BE USED ONLY IF THE TYPE 5 RAMPS CANNOT BE PLACED AT THE ENDS OF THE RADIUS.
FOURTH CHOICE		IF SITE CONSTRAINTS PREVENT THE CONSTRUCTION OF ANY OF THE TYPES LISTED, THEN AND ONLY THEN CAN THE 12:1 MAX. SLOPE ON THE RAMP BE EXCEEDED TO PROVIDE ACCESS TO THE STREET LEVEL (ALTERATIONS ONLY). THE SLOPE CAN BE STEEPENED TO A 10:1 MAX. FOR A MAX. LENGTH OF 5' OR A 8:1 MAX. FOR A MAX. LENGTH OF 2'. SLOPES STEEPER THAN 8:1 ARE NOT ALLOWED UNDER ANY CIRCUMSTANCES.

NOTE: IN ALTERATIONS, THE SELECTION OF THE TYPE OF WHEELCHAIR RAMP TO BE CONSTRUCTED SHALL BE BASED ON THE AMOUNT OF RIGHT-OF-WAY AVAILABLE, AND ON THE PRESENCE OF OTHER SITE CONSTRAINTS (UTILITIES, BUILDINGS, ETC.). THE TABLE ABOVE LISTS THE ORDER IN WHICH THE RAMPS ARE TO BE CONSIDERED.

AN ALTERATION IS DEFINED AS A PROJECT THAT CHANGES OR AFFECTS THE USE OF A PEDESTRIAN PATHWAY (OVERLAYS, SIGNALIZATION PROJECTS, ETC.) BUT DOES NOT REQUIRE THE PURCHASE OF ADDITIONAL RIGHT-OF-WAY. ALL PROJECTS THAT REQUIRE THE PURCHASE OF ADDITIONAL RIGHT-OF-WAY WILL USUALLY BE CONSIDERED NEW CONSTRUCTION FOR THE PURPOSES OF THE CHART ABOVE.

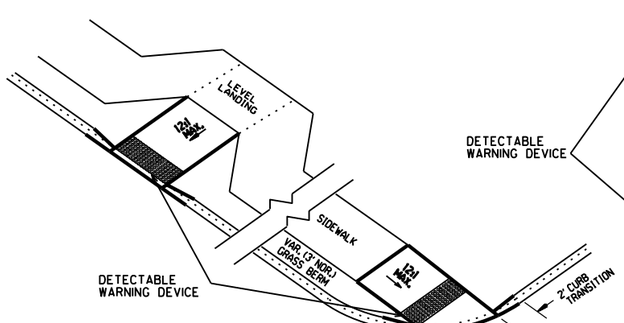

TYPE 3 RAMP

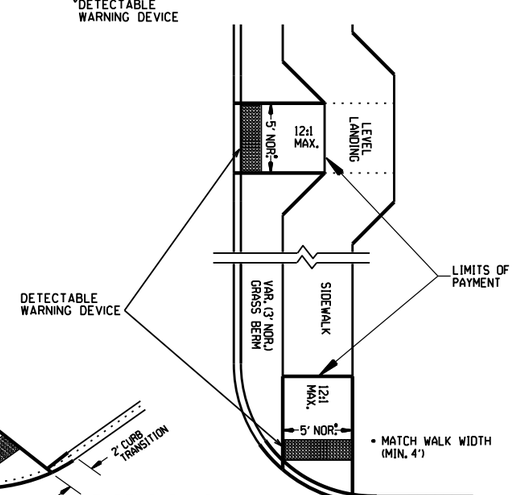

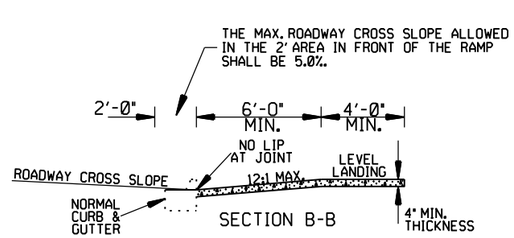

SECTION B-B

DATE	REVISION	DATE FILM
11-10-05	REVISED TO NEW SIDEWALK POLICY	
10-9-03	REVISED GEN. NOTES & ADDED NOTE	
4-10-03	REV. DETECTABLE WARNING DEVICES	
8-22-02	ADD DETECTABLE WARNING DEVICES	
3-30-00	ADD. SLOPE TRANS. & REV. ISL. DIMS.	
11-18-98	REVISED NOTES	
8-12-98	REVISED TEXTURE	
7-02-98	REDRAWN & REISSUED	
10-18-96	CORRECTED DIMENSIONS	10-18-96
5-24-90	FROM 8 TO 12 MAX. SLOPES	5-24-90
7-15-88	ADJUSTED MAX. SLOPE	652-7-15-88
7-14-88	INCLUD. "CONC. ISLD." IN PAY ITEM	------
6-02-76	ISSUED-P.H.D.	299-7-28-76

ARKANSAS STATE HIGHWAY COMMISSION

WHEELCHAIR RAMPS
NEW CONSTRUCTION
AND ALTERATIONS

STANDARD DRAWING WR-1

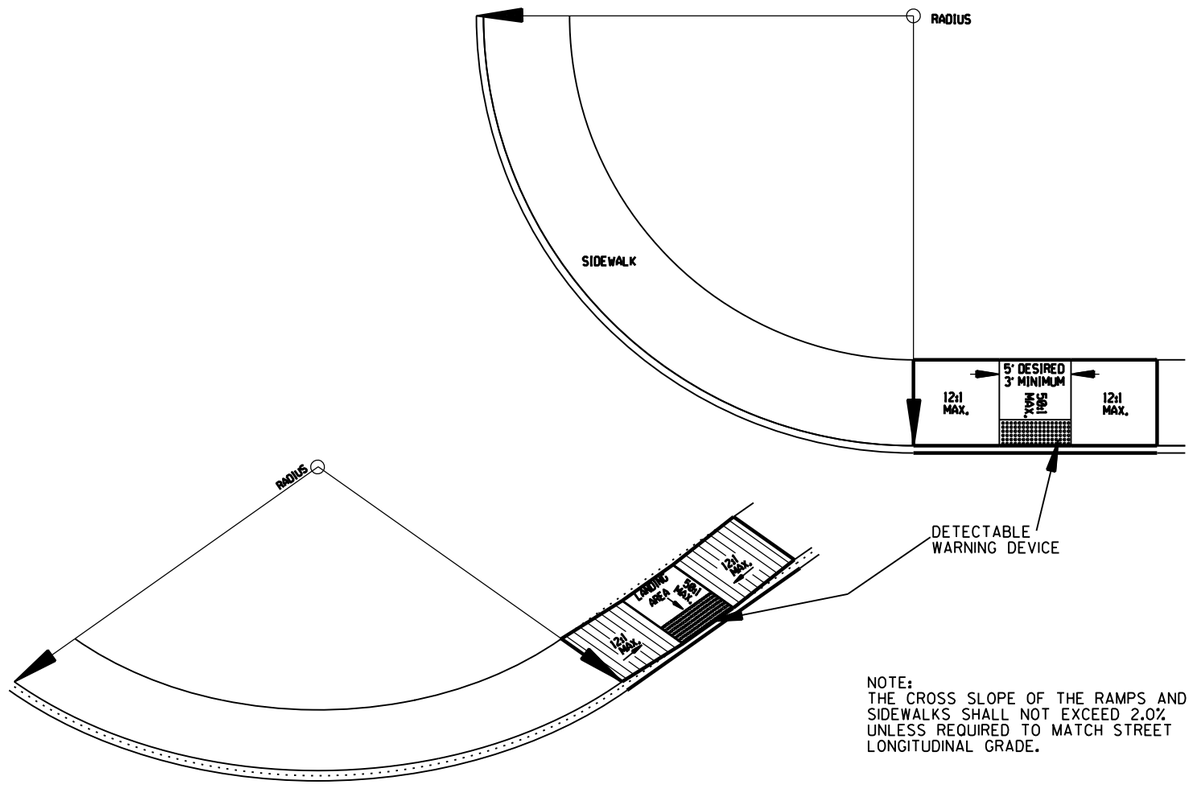

NOTE:
THE CROSS SLOPE OF THE RAMPS AND SIDEWALKS SHALL NOT EXCEED 2.0% UNLESS REQUIRED TO MATCH STREET LONGITUDINAL GRADE.

TYPE 5 RAMP

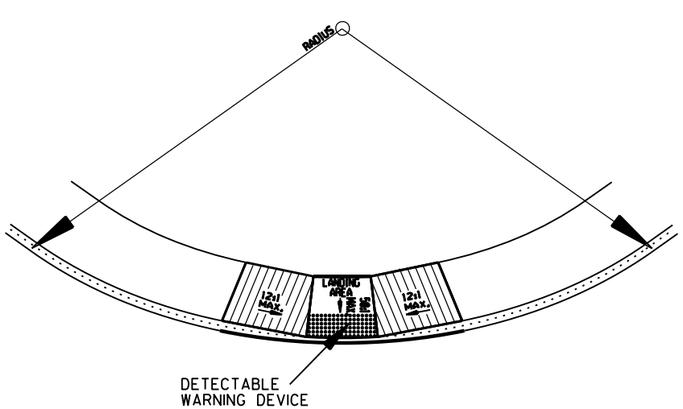

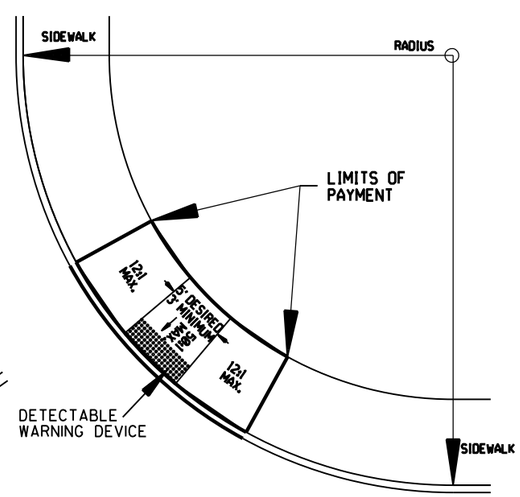

TYPE 6 RAMP

GENERAL NOTES FOR DETECTABLE WARNING DEVICES

THE DETECTABLE WARNING DEVICE SHALL BE LOCATED SO THAT THE NEAREST EDGE OF THE DEVICE IS 6 TO 8 INCHES FROM THE FACE OF THE CURB.
TRUNCATED DOMES IN THE DETECTABLE WARNING SURFACE SHALL MEET THE REQUIREMENTS OF THE GEOMETRIC CONFIGURATION SHOWN.
DOMES SHALL BE ALIGNED ON A SQUARE GRID IN THE PREDOMINANT DIRECTION OF TRAVEL TO PERMIT WHEELS TO ROLL BETWEEN DOMES.
DETECTABLE WARNING DEVICE SHALL BE 24 INCHES IN THE DIRECTION OF TRAVEL AND EXTEND THE FULL WIDTH OF THE CURB RAMP OR FLUSH SURFACE.
DETECTABLE WARNING DEVICE SHALL BE ON THE ARDOT QUALIFIED PRODUCTS LIST FOR CAST-IN-PLACE TACTILE PANELS (ADA DETECTABLE WARNING).

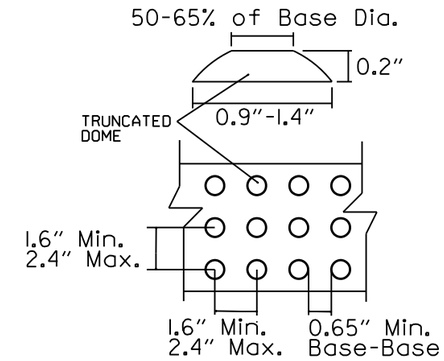

DETECTABLE WARNING DEVICE DETAIL

GENERAL NOTES:

IN ALTERATIONS WHEELCHAIR RAMPS ARE TO BE PROVIDED AT CURBED STREET INTERSECTIONS WITH PEDESTRIAN TRAFFIC AND MID-BLOCK CROSSWALK LOCATIONS.

THE LENGTH OF THE RAMP SHALL BE SUCH THAT THE SLOPE DOES NOT EXCEED 12:1. THE SURFACE TEXTURE OF THE RAMP SHALL CONFORM TO A CLASS 6 FINISH ACCORDING TO SECTION 802.19.

THE NORMAL GUTTER GRADE SHALL BE MAINTAINED THROUGH THE AREA OF THE RAMP.
ALL PAVEMENT MARKINGS SHALL BE IN ACCORDANCE WITH THE LATEST EDITION OF THE MANUAL OF UNIFORM TRAFFIC CONTROL DEVICES PUBLISHED BY THE FEDERAL HIGHWAY ADMINISTRATION.
THE MINIMUM THICKNESS OF THE RAMP, WALK, & LANDING SHALL BE 4".
THE MINIMUM WIDTH OF THE RAMPS SHALL BE THE EXISTING WALK WIDTH OR 36", WHICHEVER IS GREATER.
MINOR MODIFICATIONS OF THESE DETAILS, AS APPPROVED BY THE ENGINEER, MAY BE MADE TO ADJUST TO LOCAL CONDITIONS.

RAMP SELECTION CRITERIA

FIRST CHOICE	TYPE 1	CORNER LOCATIONS WITH THE WALK ADJACENT TO THE CURB (BOTH NEW CONSTRUCTION AND ALTERATIONS).
	TYPE 2	CORNER LOCATIONS WITH THE WALK OFFSET FROM THE CURB A DISTANCE INSUFFICIENT TO ALLOW THE REQUIRED RAMP SLOPE (BOTH NEW CONSTRUCTION AND ALTERATIONS).
	TYPE 3	CORNER LOCATIONS WITH THE WALK OFFSET FROM THE CURB A DISTANCE SUFFICIENT TO ALLOW THE REQUIRED RAMP SLOPE (BOTH NEW CONSTRUCTION AND ALTERATIONS).
	TYPE 4	TANGENT LOCATIONS (BOTH NEW CONSTRUCTION AND ALTERATIONS).
SECOND CHOICE	TYPE 5	TANGENT LOCATIONS (ALTERATIONS ONLY).
THIRD CHOICE	TYPE 6	CORNER LOCATIONS (ALTERATIONS ONLY). THIS RAMP MAY BE USED ONLY IF THE TYPE 5 RAMPS CANNOT BE PLACED AT THE ENDS OF THE RADIUS.
FOURTH CHOICE		IF SITE CONSTRAINTS PREVENT THE CONSTRUCTION OF ANY OF THE TYPES LISTED, THEN AND ONLY THEN CAN THE 12:1 MAX. SLOPE ON THE RAMP BE EXCEEDED TO PROVIDE ACCESS TO THE STREET LEVEL (ALTERATIONS ONLY). THE SLOPE CAN BE STEEPENED TO A 10:1 MAX. FOR A MAX. LENGTH OF 5' OR A 8:1 MAX. FOR A MAX. LENGTH OF 2'. SLOPES STEEPER THAN 8:1 ARE NOT ALLOWED UNDER ANY CIRCUMSTANCES.

NOTE: IN ALTERATIONS, THE SELECTION OF THE TYPE OF WHEELCHAIR RAMP TO BE CONSTRUCTED SHALL BE BASED ON THE AMOUNT OF RIGHT-OF-WAY AVAILABLE, AND ON THE PRESENCE OF OTHER SITE CONSTRAINTS (UTILITIES, BUILDINGS, ETC.). THE TABLE ABOVE LISTS THE ORDER IN WHICH THE RAMPS ARE TO BE CONSIDERED.

AN ALTERATION IS DEFINED AS A PROJECT THAT CHANGES OR AFFECTS THE USE OF A PEDESTRIAN PATHWAY (OVERLAYS, SIGNALIZATION PROJECTS, ETC.) BUT DOES NOT REQUIRE THE PURCHASE OF ADDITIONAL RIGHT-OF-WAY. ALL PROJECTS THAT REQUIRE THE PURCHASE OF ADDITIONAL RIGHT-OF-WAY WILL USUALLY BE CONSIDERED NEW CONSTRUCTION FOR THE PURPOSES OF THE CHART ABOVE.

DATE	REVISION	DATE FILM
10-9-03	REVISED GENERAL NOTES & ADDED NOTE.	
4-10-03	REVISED DETECTABLE WARNING DEVICE DETAIL	
8-22-02	ADDED DETECTABLE WARNING DEVICES DETAILS	
11-18-98	REV. FOURTH CHOICE NOTE	
8-12-98	REVISED TEXTURE	
7-02-98	ISSUED	

ARKANSAS STATE HIGHWAY COMMISSION

WHEELCHAIR RAMPS
ALTERATIONS ONLY

STANDARD DRAWING WR-2