DATE REVISED	DATE FILMED	DATE REVISED	DATE FILMED	FED. ROAD DIST. NO.	STATE	FED. AID PROJ. NO.	SHEET NO.	TOTAL SHEETS
8-23-05				6	ARK.			
				JOB NO.		100547	72	331
				①	07019	QUANTITIES	46898	

SCHEDULE OF BRIDGE QUANTITIES - JOB NO. 100547

BRIDGE NO.	CODE NO.	NAME PLATE TITLE	UNIT OF STRUCTURE / ITEM NO. / ITEM / UNIT	801 UNCLASSIFIED EXCAVATION FOR STRUCTURES-BRIDGE	SP & 802 CLASS S CONCRETE-BRIDGE	SP & 802 CLASS S(AE) CONCRETE-BRIDGE	803 CLASS 1 PROTECTIVE SURFACE TREATMENT	804 REINFORCING STEEL-BRIDGE (GRADE 60)	804 EPOXY COATED REINFORCING STEEL (GRADE 60)	SP & 805 STEEL SHELL PILING (18 '' DIA.)	807 STRUCTURAL STEEL IN BEAM SPANS (M 270, GRADE 50)	807 PAINTING STRUCTURAL STEEL ①	808 ELASTOMERIC BEARINGS	812 BRIDGE NAME PLATE (TYPE D)	816 CONCRETE RIPRAP	SP JOB 100547 ARMORED JOINT WITH NEOPRENE STRIP SEAL
			UNIT	CU. YD.	CU. YD.	CU. YD.	GAL.	LB.	LB.	LIN. FT.	LB.	TON	CU. IN.	EACH	CU. YD.	LIN. FT.
07019	X771	HWY. 63 OVERPASS	BENT NOS. 1 & 5		88.14		0.6	11376		1085	1990	0.8	5781.9		230	86
			BENT NO. 2	132	117.90			18468		1320			5501.7			
			BENT NO. 3	132	117.91			18468		1320			4934.7			
			BENT NO. 4	137	118.15			18468		1080			5501.7			
			308'-0" CONTINUOUS W-BEAM UNIT			411.30	32.3		81250		322400	158.5		1		
TOTALS FOR JOB NO. 100547				401	442.10	411.30	32.9	66780	81250	4805	324390	159.3	21720.0	1	230	86

① THE COLOR OF PAINT SHALL BE ALUMINUM AND CONFORM TO FEDERAL STANDARD 595A, COLOR CHIP NO. 37200.

Note: Construct a Type 2 Special Approach Slab and Type 'PT' Approach Gutters at the South end only of Existing Br. No. 05608. Use 'S' = 5'-6" for the inside gutter and 'S' = 9'-6" for the outside gutter. See Drwg. Nos. 46917 and 2091 for additional details.

AILEEN SCHUBEL
DESIGN SECTION SUPERVISOR

STATE OF ARKANSAS
REGISTERED PROFESSIONAL ENGINEER
No. 4337
9/16/05
CHARLES P. BRAND

BRIDGE ENGINEER

SCHEDULE OF BRIDGE QUANTITIES
HWY. 135 INTERCHANGE (F)
POINSETT COUNTY

ROUTE 63 SEC. 9
ARKANSAS STATE HIGHWAY COMMISSION
LITTLE ROCK, ARK.

DRAWN BY: JAC DATE: 8-30-04 FILENAME: b100547_q1.dgn
CHECKED BY: EWP DATE: 9-7-04 SCALE: None
DESIGNED BY: Std. DATE:

BRIDGE NO. 07019 DRAWING NO. 46898

DATE REVISED	DATE FILMED	DATE REVISED	DATE FILMED	FED. ROAD DIST. NO.	STATE	FED. AID PROJ. NO.	SHEET NO.	TOTAL SHEETS
				6	ARK.			
				JOB NO.		100547	105	331
				① 07019		LAYOUT	46899	

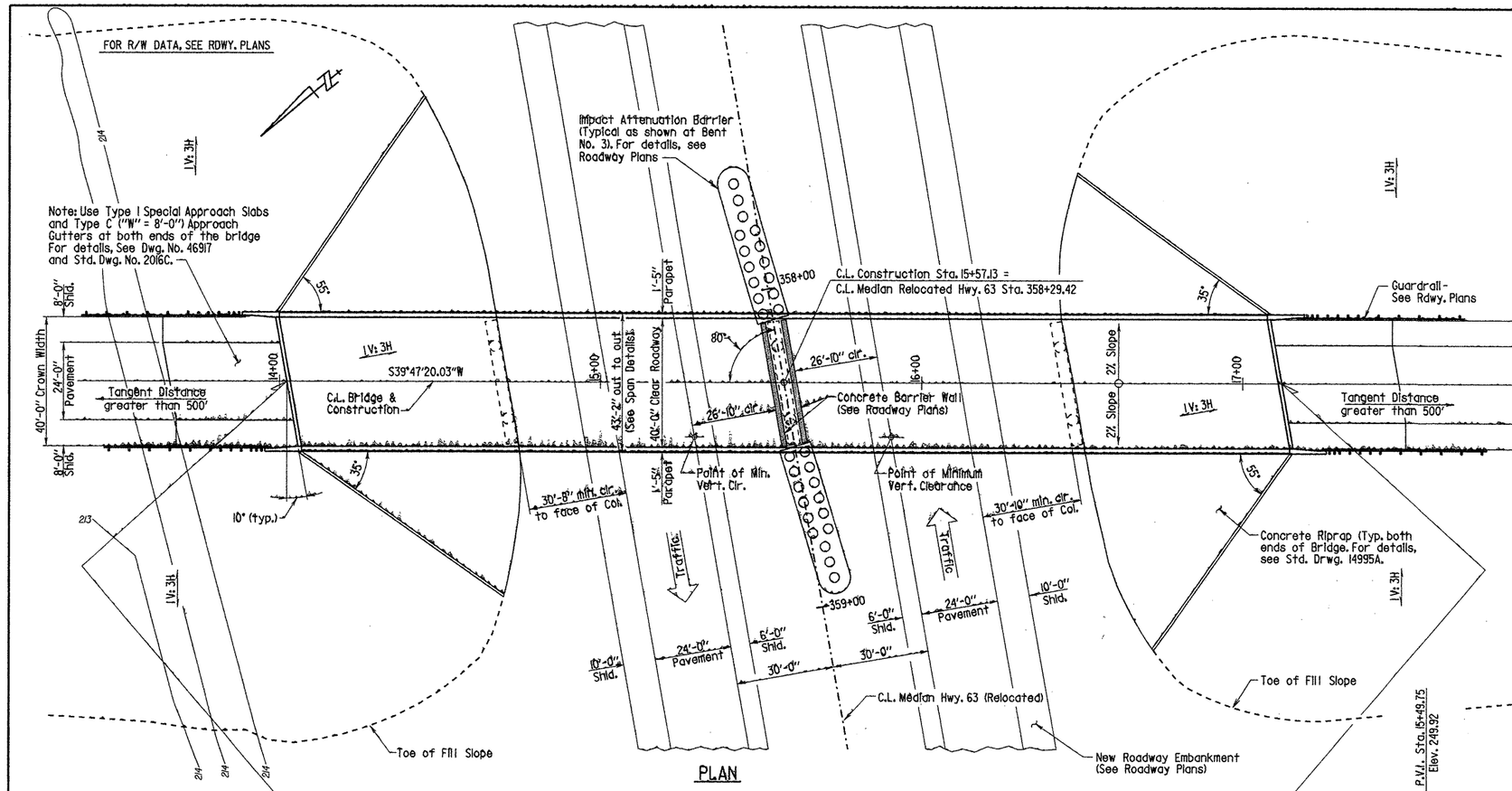

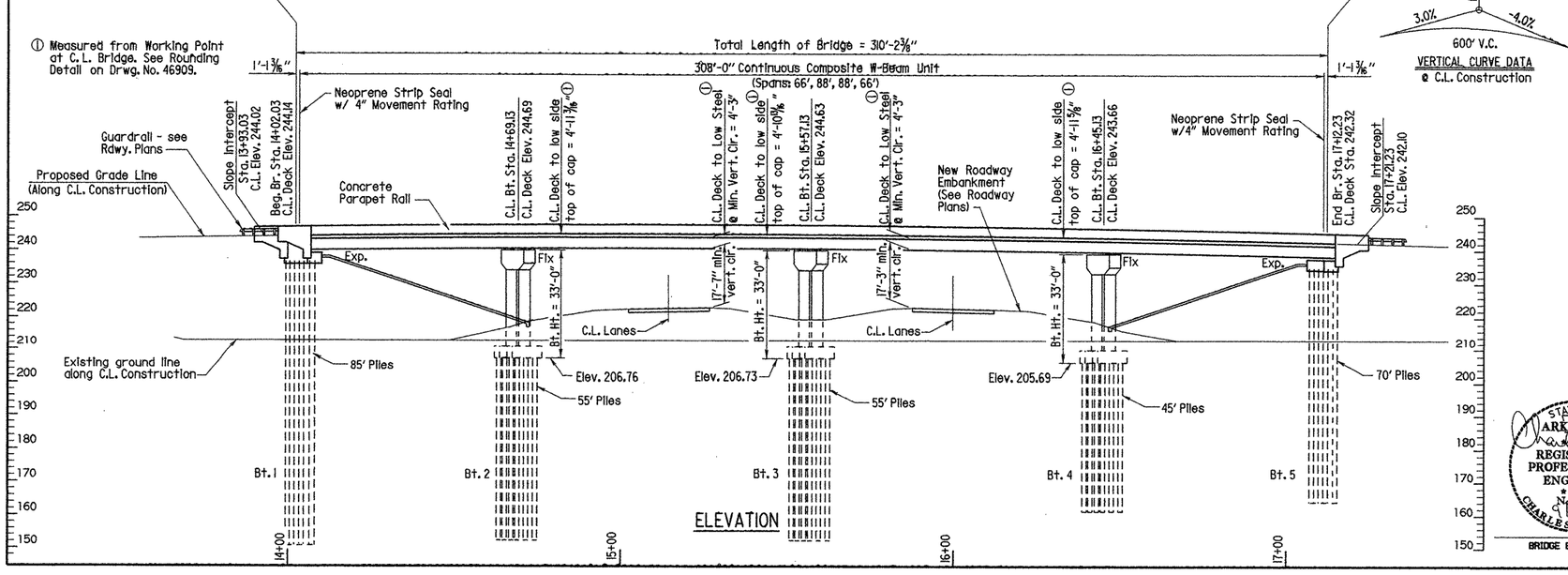

GENERAL NOTES

BENCH MARK: Cotton Picker Spindle in power pole, 138.15' right of centerline construction Sta. 12+87.63. Elev. 214.90.

CONSTRUCTION SPECIFICATIONS: Arkansas State Highway and Transportation Department Standard Specifications for Highway Construction (2003 edition) with applicable supplemental specifications and special provisions. Unless otherwise noted in the plans, Section and Subsection refer to the Standard Construction Specifications.

DESIGN SPECIFICATIONS: AASHTO Standard Specifications for Highway Bridges (2002 edition).

LIVE LOADING: HS20 METHOD OF DESIGN: Load Factor
SEISMIC PERFORMANCE CATEGORY: D

MATERIALS AND STRENGTHS:

Class S(AE) Concrete (superstructure)	f'c = 4,000 psi
Class S Concrete (substructure)	f'c = 3,500 psi
Reinforcing Steel (AASHTO M31 or M53, GR. 60)	fy = 60,000 psi
Structural Steel (AASHTO M270, GR. 50)	Fy = 50,000 psi
Structural Steel (AASHTO M270, GR. 36)	Fy = 36,000 psi

BORING LOGS: Boring logs may be obtained from the Programs and Contracts Division.

BRIDGE DECK: The concrete bridge deck shall be given a tine finish as specified for final finishing in Subsection 802.19 for Class 5 Tined Bridge Roadway Surface Finish.

FOOTINGS: The top of the footings at Bents 2 thru 4 shall be set a minimum of 2 feet below natural ground. Foundations for footings shall be prepared in accordance with Subsection 801.04.

STEEL SHELL PILING: Piling for Bents 1 thru 5 shall be 18" diameter concrete filled steel shell piles and shall be driven to a minimum safe bearing capacity of 55 tons per pile. All piling shall be driven with an approved air, steam or diesel hammer. Drive piles in Bents 1 thru 3 to a minimum tip elevation of 155.0 or lower. Drive piles in Bents 4 & 5 to a minimum tip elevation of 165.0 or lower. Piles in end bents are to be driven after embankment to bottom of cap is in place.

Lengths of piling shown are assumed for estimating quantities only. Actual lengths are to be determined in the field. No additional payment will be made for cut-off or build-up. Test piles are not required but may be driven for the Contractor's information in accordance with Subsection 805.08(g).

Water jetting or other methods as approved by the Engineer may be required to achieve minimum penetration. This work shall not be paid for directly, but shall be considered incidental to the item "Steel Shell Piling (18" Dia.)."

PAINTING: All new structural steel except galvanized members, machined surfaces, and some surfaces in contact with concrete shall be painted as specified in Subsection 807.75. The color of the paint shall be Aluminum and shall match the Federal Standard 595A Color Chip No. 37200.

DETAIL DRAWINGS:	DRAWING NO.
End Bents	46901 - 46903
Intermediate Bents	46904 - 46906
Concrete Filled Steel Shell Piling	46907
Elastomeric Bearings	46908
308'-0" Cont. W-Beam Unit	46909 - 46916
Type I Special Approach Slab	46917
Type C Approach Gutters	2016C

NOTE: For Soil Boring Information, see Drwg. No. 46900.

STATE OF ARKANSAS
Charles P. Brand
REGISTERED PROFESSIONAL ENGINEER
No. 4337
9/7/04
CHARLES P. BRAND
BRIDGE ENGINEER

LAYOUT OF BRIDGE
HWY. 63 OVERPASS
HWY. 135 INTERCHANGE (F)
POINSETT COUNTY

ROUTE 63 SEC. 9

ARKANSAS STATE HIGHWAY COMMISSION

LITTLE ROCK, ARK.

DRAWN BY: A.W.S. DATE: 7/31/03 FILENAME: B100547X1.L11
CHECKED BY: JAC DATE: 9-7-04 SCALE: 1" = 20'
DESIGNED BY: AHS DATE: 7/23/03

BRIDGE NO. 07019 DRAWING NO. 46899

DATE REVISED	DATE FILMED	DATE REVISED	DATE FILMED	FED. ROAD DIST. NO.	STATE	FED. AID PROJ. NO.	SHEET NO.	TOTAL SHEETS
				6	ARK.			
				JOB NO.		100547	106	331
				1 07019		SOIL BORINGS	46900	

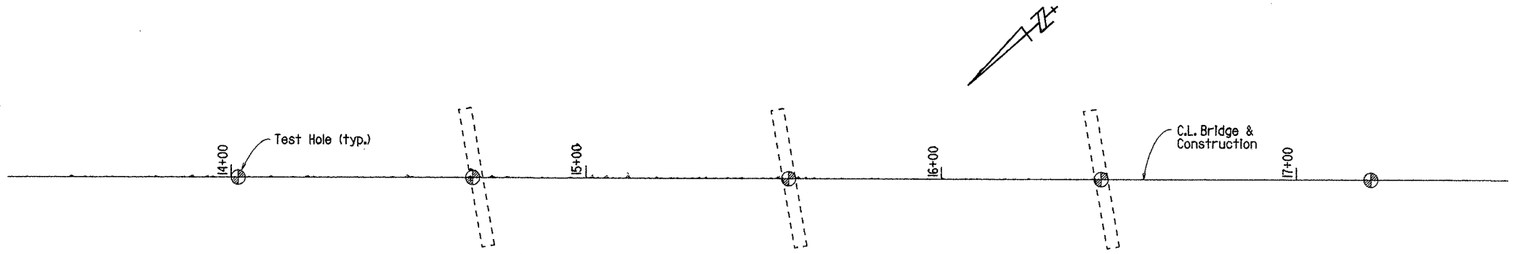

PLAN

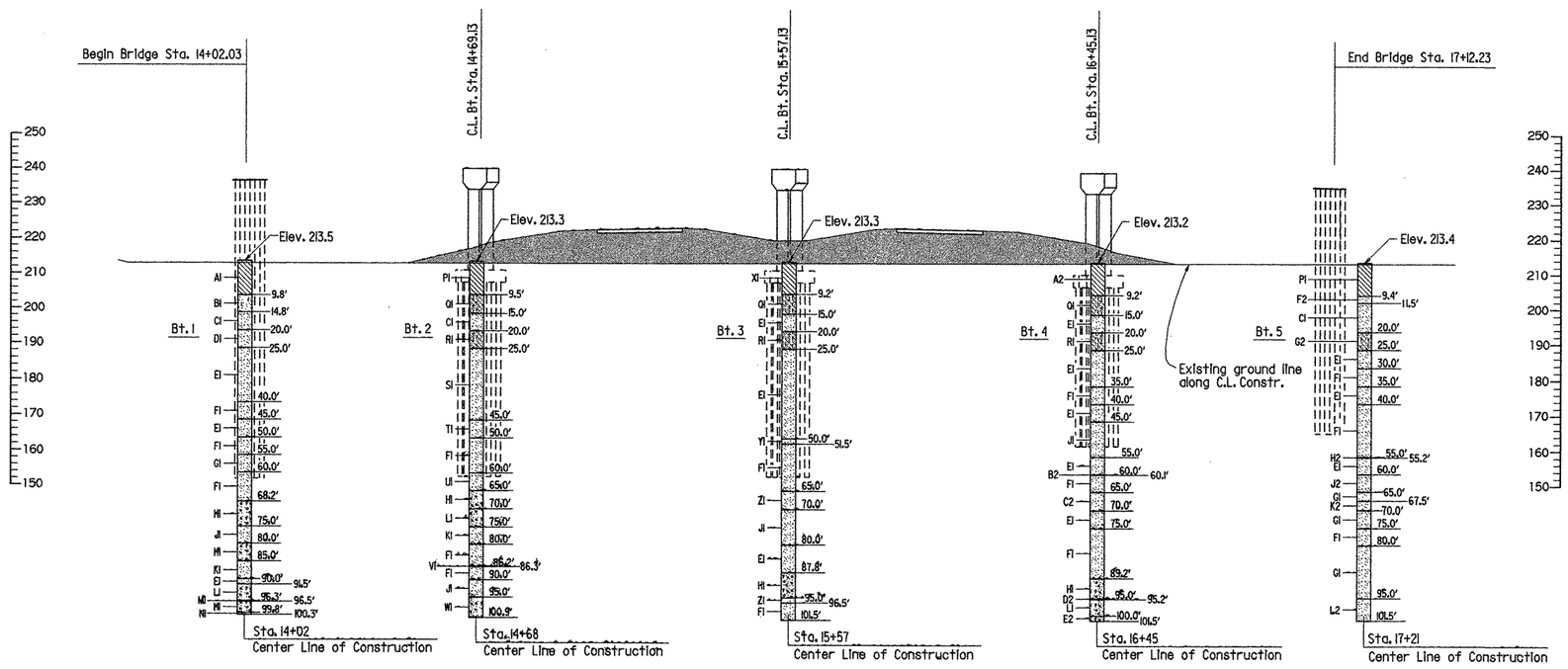

Bt. 1	Bt. 2	Bt. 3	Bt. 4	Bt. 5
4.5- 5.5, N=11	5.5- 6.5, N=11	9.7- 10.7, N=7	4.7- 5.7, N=7	6.9- 7.9, N=13
10.3- 11.3, N=9	10.0- 11.0, N=8	15.5- 16.5, N=12	9.7- 10.7, N=9	11.9- 12.9, N=19
15.3- 16.3, N=13	15.5- 16.5, N=16	20.5- 21.5, N=4	15.5- 16.5, N=15	15.5- 16.5, N=19
20.5- 21.5, N=6	20.5- 21.5, N=4	25.5- 26.5, N=26	20.5- 21.5, N=2	20.5- 21.5, N=4
25.5- 26.5, N=23	25.5- 26.5, N=22	30.5- 31.5, N=22	25.5- 26.5, N=29	25.5- 26.5, N=30
30.5- 31.5, N=23	30.5- 31.5, N=23	35.5- 36.5, N=20	30.5- 31.5, N=18	30.5- 31.5, N=46
35.5- 36.5, N=19	35.5- 36.5, N=18	40.5- 41.5, N=24	35.5- 36.5, N=40	35.5- 36.5, N=21
40.5- 41.5, N=32	40.5- 41.5, N=25	45.5- 46.5, N=29	40.5- 41.5, N=27	40.5- 41.5, N=31
45.5- 46.5, N=16	45.5- 46.5, N=22	50.5- 51.5, N=34	45.5- 46.5, N=36	45.5- 46.5, N=32
50.5- 51.5, N=40	50.5- 51.5, N=32	55.5- 56.5, N=36	50.5- 51.5, N=37	50.5- 51.5, N=37
55.5- 56.5, N=63	55.5- 56.5, N=43	60.5- 61.5, N=31	55.5- 56.5, N=23	55.5- 56.5, N=27
60.5- 61.5, N=46	60.5- 61.5, N=28	65.5- 66.5, N=36	60.5- 61.5, N=38	60.5- 61.5, N=31
65.5- 66.5, N=34	65.5- 66.5, N=39	70.5- 71.5, N=49	65.5- 66.5, N=37	65.5- 66.5, N=50
70.5- 71.5, N=40	70.5- 71.5, N=25	75.5- 76.5, N=43	70.5- 71.5, N=29	70.5- 71.5, N=51
75.5- 76.5, N=40	75.5- 76.5, N=53	80.5- 81.5, N=22	75.5- 76.5, N=40	75.5- 76.5, N=34
80.5- 81.5, N=55	80.5- 81.5, N=37	85.5- 86.5, N=26	80.5- 81.5, N=54	80.5- 81.5, N=62
85.5- 86.5, N=55	85.5- 86.5, N=34	90.5- 91.5, N=46	85.5- 86.5, N=41	85.5- 86.5, N=63
90.5- 91.5, N=22	90.5- 91.5, N=39	95.5- 96.5, N=39	90.5- 91.5, N=30	90.5- 91.5, N=70
95.5- 96.5, N=49	95.5- 96.5, N=56	100.5-101.5, N=48	95.5- 96.5, N=29	95.5- 96.5, N=53
100.0-100.2, N=60(3'')	100.5-100.9, N=60(5'')		100.5-101.5, N=57	100.5-101.5, N=72

ELEVATION

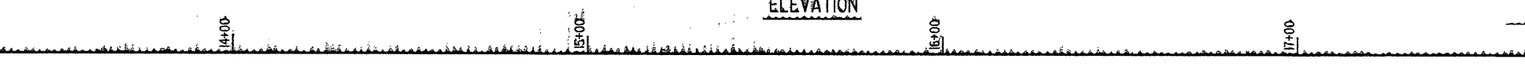

BORING LEGEND

A1-Moist, Stiff, Gray and Brown Mottled Clay
B1-Moist, Loose, Gray Silty Sand
C1-Moist, Medium Dense, Gray Sand
D1-Wet, Loose, Gray Sand
E1-Wet, Medium Dense, Gray Sand
F1-Wet, Dense, Gray Sand
G1-Wet, Very Dense, Gray Sand
H1-Wet, Dense, Gray Sand and Gravel
J1-Wet, Dense, Gray Sand with Traces of Gravel
K1-Wet, Very Dense, Gray Sand with Traces of Gravel
L1-Wet, Medium Dense, Gray Sand and Gravel
M1-Hard, Black Lignite (96.3' to 96.5')
N1-Wet, Very Dense, Gray Gravel
P1-Moist, Stiff, Mottled Gray and Brown Clay
Q1-Moist, Loose, Gray Silty Sand with Clay Seams
R1-Wet, Very Loose, Gray Silty Sand with Clay Seams
S1-Wet, Medium Dense, Gray Sand
T1-Wet, Medium Dense, Gray Sand with Traces of Gravel
U1-Wet, Medium Dense, Gray Sand with Traces of Lignite
V1-Medium Hard, Black Lignite (86.2' to 86.3')
W1-Wet, Very Dense, Gray Sand and Gravel
X1-Moist, Medium Stiff, Mottled Clay
Y1-Wet, Dense, Gray Sand with Traces of Organic Matter
Z1-Wet, Dense, Gray Sand with some Lignite
A2-Moist, Medium Stiff, Gray and Brown Clay
B2-Wet, Dense, Gray Gravel
C2-Wet, Dense, Gray Sand with some Gravel
D2-Soft, Black Lignite (95.0' to 95.2')
E2-Wet, Very Dense, Gray Sand and Gravel with some Lignite
F2-Moist, Medium Dense, Gray Clayey Sand
G2-Wet, Medium Dense, Gray Silty Sand with Clay Seams
H2-Moist, Stiff, Black Organic Matter (Wood) (55.0' to 55.2')
J2-Wet, Medium Dense, Gray Sand with Traces of Organic Matter
K2-Wet, Very Dense, Gray Sand with some Gravel
L2-Wet, Very Dense, Gray Sand with some Lignite

Note: Some lignite seams were encountered in some of the borings and may be encountered in greater amounts at other locations within the project area.

STATE OF ARKANSAS
No. 4937
REGISTERED PROFESSIONAL ENGINEER
CHARLES P. BLAND
BRIDGE ENGINEER

LAYOUT OF SOIL BORINGS
HWY. 63 OVERPASS
HWY. 135 INTERCHANGE (F)
POINSETT COUNTY

ROUTE 63 SEC. 9

ARKANSAS STATE HIGHWAY COMMISSION

LITTLE ROCK, ARK.

DRAWN BY: LM DATE: 2/5/04 FILENAME: B100547X1_bor.dgn
CHECKED BY: JAC DATE: 9-7-04 SCALE: 1"=20'
DESIGNED BY: SMS DATE: 7/23/03

BRIDGE NO. 07019 DRAWING NO. 46900

DATE REVISED	DATE FILMED	DATE REVISED	DATE FILMED	FED. ROAD DIST. NO.	STATE	FED. AID PROJ. NO.	SHEET NO.	TOTAL SHEETS
8-23-05				6	ARK.			
				JOB NO.		100547	107	331
				07019		END BENT		46901

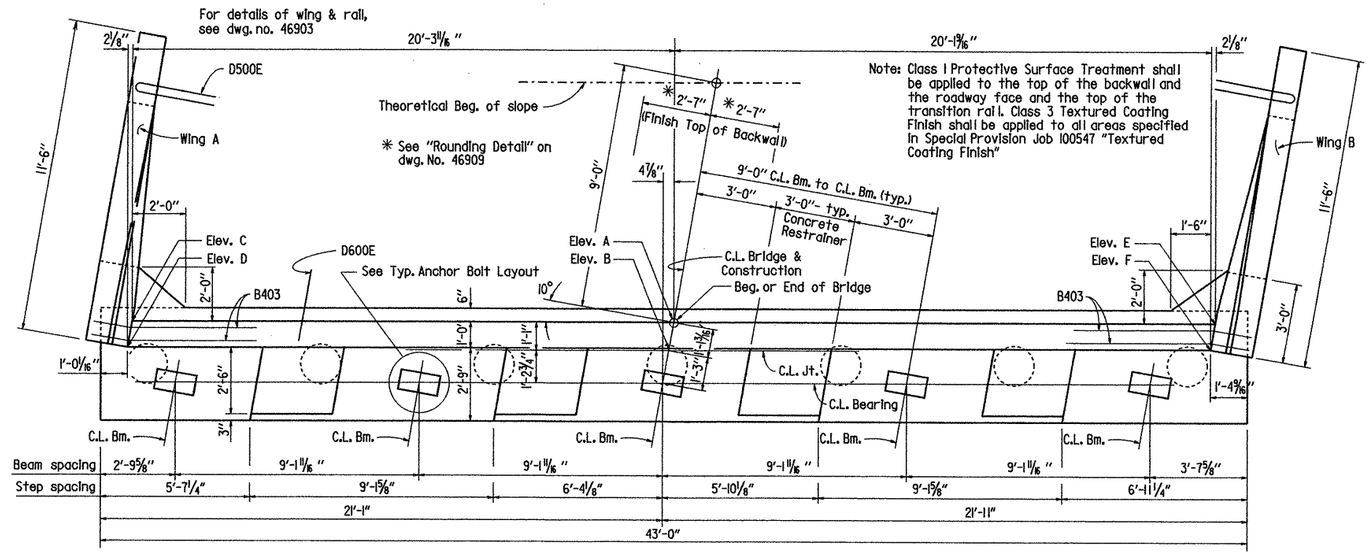

PLAN

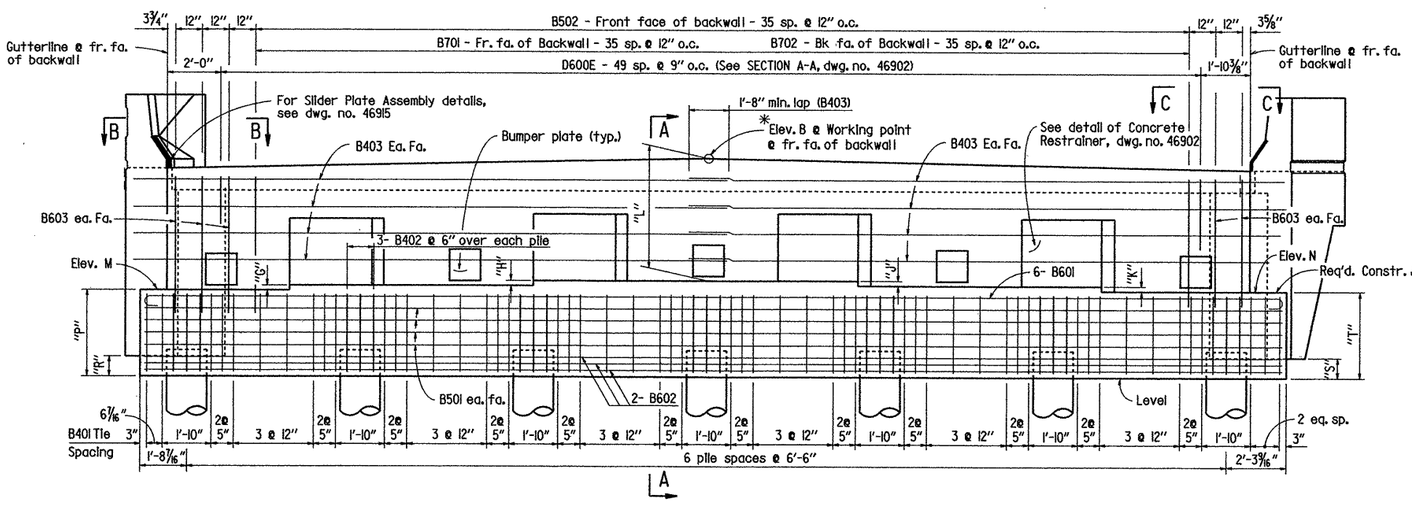

Note: For Section A - A, see dwg. no. 46902

ELEVATION

Looking Ahead - Bent 5
Looking Back - Bent 1

BAR LIST - PER BENT

Mark	No. Req'd.	Length	Pin Dia.
B401	53	14'-0"	2"
B402	21	9'-7"	2"
B403	16	22'-6"	2"
B404	6	5'-6"	Str.
B601	6	44'-0"	4½"
B602	6	42'-8"	Str.
B603	10	6'-6"	Str.
B604	5	6'-2"	4½"
B605	5	6'-9"	4½"
P606	32	9'-2"	4½"
P501	20	10'-4"	3¾"
B501	8	42'-8"	Str.
B502	36	6'-5"	3¾"
B701	36	6'-4"	Str.
B702	36	5'-1"	Str.
D600E	50	5'-11"	4½"

Bending Diagram (Dimensions are out to out of bars.)

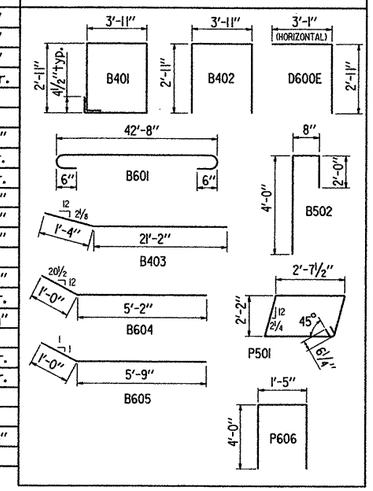

Note: Bars with an "E" suffix are epoxy coated and shall be measured and paid for as Reinforcing Steel- Bridge (Grade 60).

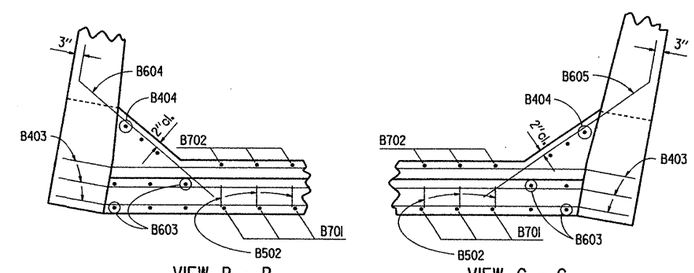

VIEW B - B
½" = 1'-0"

VIEW C - C
½" = 1'-0"

GENERAL NOTES

All concrete shall be Class "S" and be poured in the dry. All exposed corners to be chamfered ¾" unless otherwise noted.

All reinforcing steel shall conform to AASHTO M31 or M53, Grade 60.

Structural steel in end bents shall be AASHTO M270, Gr. 36 and shall be paid for as "Structural Steel in Beam Spans (AASHTO M270, GR 50)".

If anchor bolts are drilled into cap, top reinforcing bars shall be properly placed to avoid damage.

For additional information, see Layout.

Note: The backwall above the required construction joint shall not be poured until the beams are in place. Backwall may be placed prior to placing the adjacent concrete deck only if the optional backwall construction joint is used. See "Expansion Device Installation" on Dwg. No. 46915 for additional information.

TABLE OF VARIABLES

Bent No.	Elev. A	Elev. B	Elev. C	Elev. D	Elev. E	Elev. F	"G"	"H"	"J"	"K"	"L"	Elev. M	Elev. N	"P"	"R"	"S"	"T"
1	244.14	244.15	243.78	243.79	243.69	243.70	1 15/16"	1 5/8"	2 1/16"	2 3/8"	4'-5 3/4"	239.37	239.30	3'-3 7/8"	8 7/8"	7 15/16"	3'-3"
5	242.32	242.34	242.00	242.02	241.83	241.86	1 11/16"	1 3/8"	2 5/16"	2 5/8"	4'-5 1/2"	237.63	237.47	3'-4 7/8"	9 11/16"	7 11/16"	3'-3"

STATE OF ARKANSAS
REGISTERED PROFESSIONAL ENGINEER
No. 4337
8/16/05
CHARLES P. BRAND

BRIDGE ENGINEER

SHEET 1 OF 2
DETAILS OF END BENTS 1 & 5
HWY. 63 OVERPASS
ROUTE SEC.
ARKANSAS STATE HIGHWAY COMMISSION
LITTLE ROCK, ARK.

DRAWN BY: LM DATE: 7-30-04 FILENAME: b10054x1_b1.dgn
CHECKED BY: SWP DATE: 9-7-04 SCALE: ⅜" = 1'-0" or as shown
DESIGNED BY: JAC DATE: 2-7-04
BRIDGE NO. 07019 DRAWING NO. 46901

DATE REVISED	DATE FILMED	DATE REVISED	DATE FILMED	FED. ROAD DIST. NO.	STATE	FED. AID PROJ. NO.	SHEET NO.	TOTAL SHEETS
8-23-05				6	ARK.			
				JOB NO.		100547	108331	
				07019		END BENT	46902	

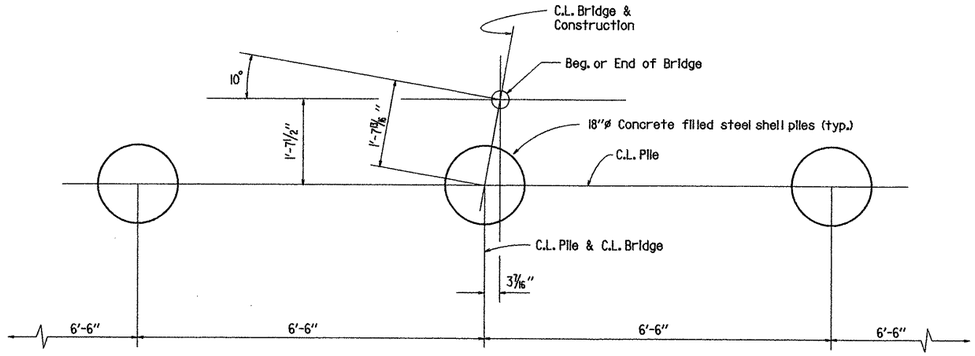

LAYOUT OF PILES

¾" = 1'-0"

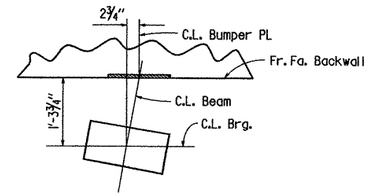

TYPICAL BUMPER PLATE LAYOUT

NTS

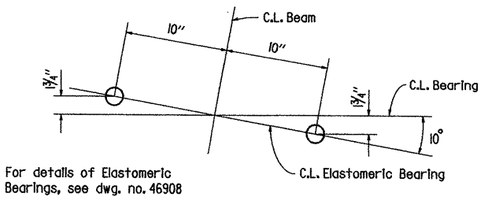

Note: For details of Elastomeric Bearings, see dwg. no. 46908

TYP. ANCHOR BOLT LAYOUT

1½" = 1'-0"

Note: Concrete shall be hand packed under the joint armor.

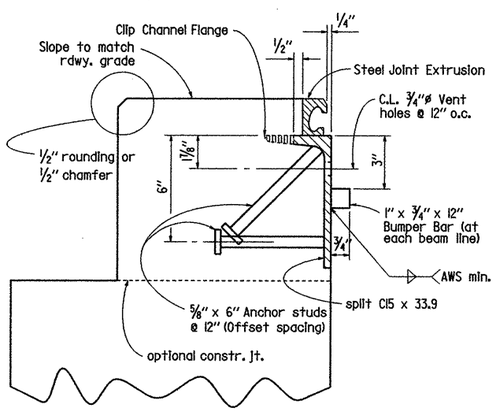

Note: Transverse spacing between vertical anchor studs and vent holes shall be 6"

For joint details, see dwg. 46915

DETAIL X

3" = 1'-0"

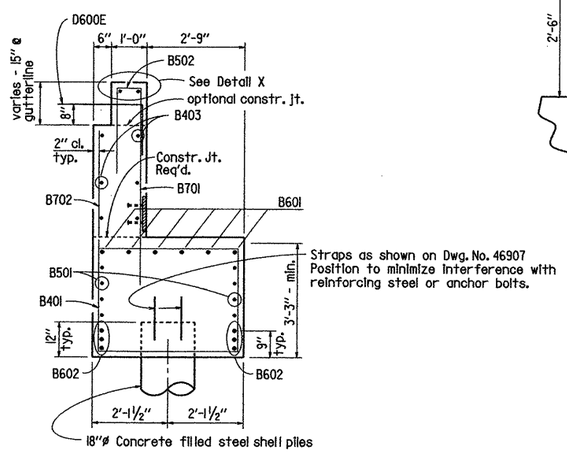

SECTION A-A

½" = 1'-0"

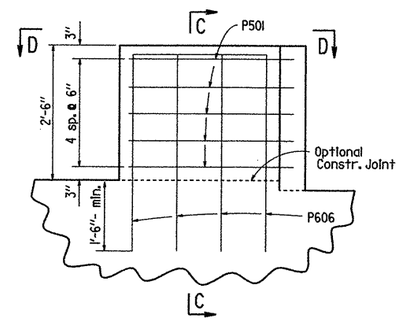

CONCRETE RESTRAINER

¾" = 1'-0"

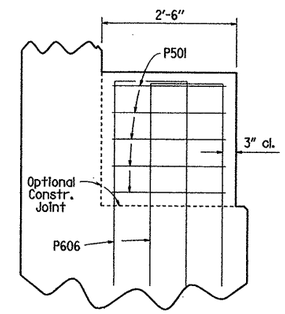

SECTION C - C

¾" = 1'-0"

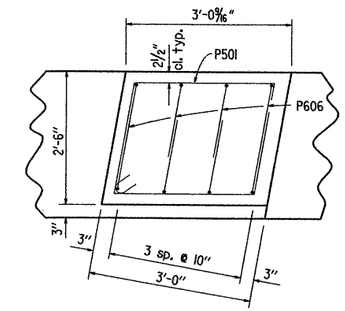

VIEW D - D

¾" = 1'-0"

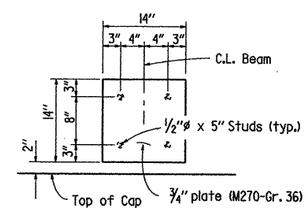

BUMPER PLATE DETAIL

1" = 1'-0"

The surfaces of the ¾" plate which will not be in contact with concrete shall be painted in accordance with Section 638, or as approved by the Engineer. Only one coat is required and shall be applied in the fabricator's shop. Painting will not be paid for directly, but will be considered subsidiary to Structural Steel in Beam Spans (M270, Gr. 50).

STATE OF ARKANSAS
REGISTERED PROFESSIONAL ENGINEER
No. 4337
8/16/05
CHARLES P. BRAND

BRIDGE ENGINEER

SHEET 2 OF 2
DETAILS OF END BENTS 1 & 5
HWY. 63 OVERPASS

ROUTE SEC.

ARKANSAS STATE HIGHWAY COMMISSION

LITTLE ROCK, ARK.

DRAWN BY: LM DATE: 8-3-04 FILENAME: bl00547xl_blb.dgn
CHECKED BY: SWP DATE: 9-7-04 SCALE: ⅜" = 1'-0" or as shown
DESIGNED BY: JAC DATE: 2-7-04

BRIDGE NO. 07019 DRAWING NO. 46902

DATE REVISED	DATE FILMED	DATE REVISED	DATE FILMED	FED. ROAD DIST. NO.	STATE	FED. AID PROJ. NO.	SHEET NO.	TOTAL SHEETS
				6	ARK.			
				JOB NO.		100547	109	331
				1 07019		WING	46903	

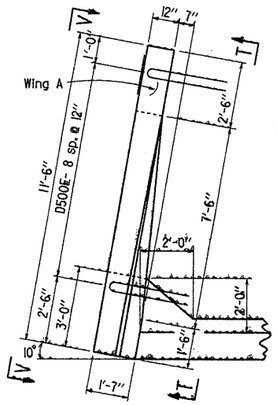

Note: Reinforcing and dimensions are the same for Wing A and Wing B, except as noted.

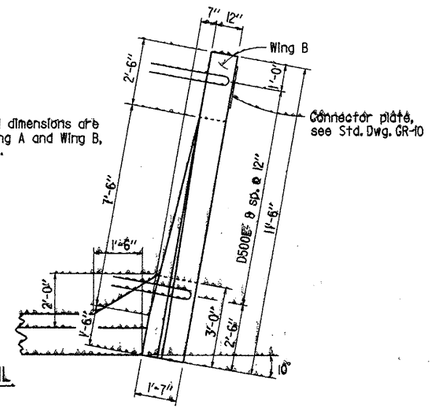

PLAN OF RAIL
3/8" = 1'-0"

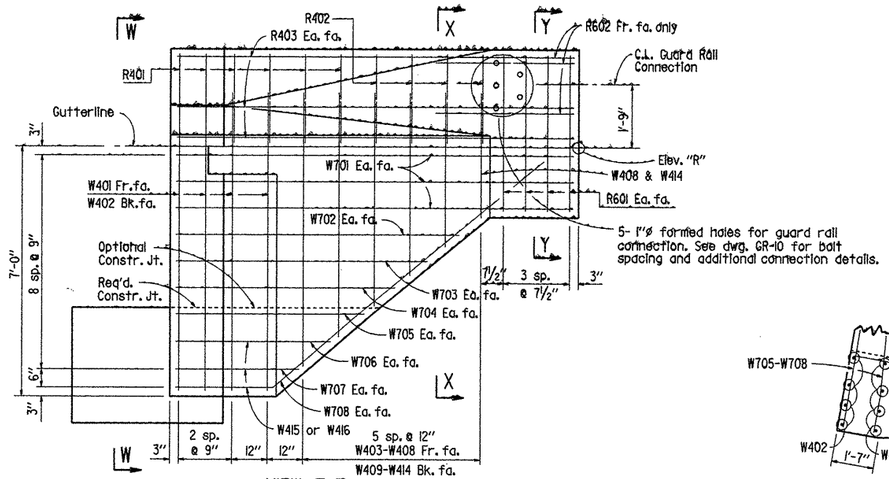

VIEW T-T
1/2"=1'-0"

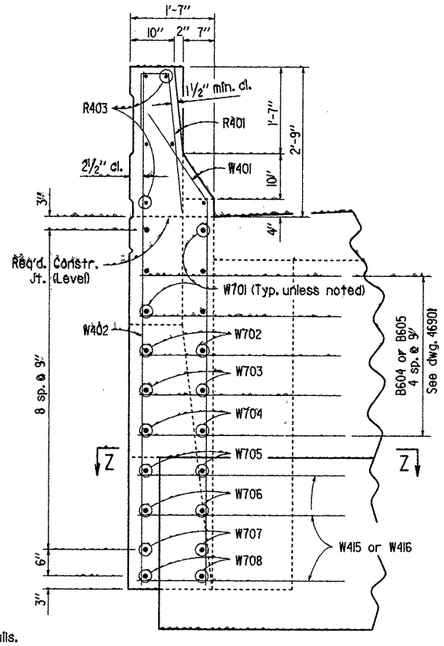

VIEW W-W
3/4"=1'-0"

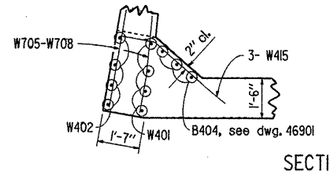

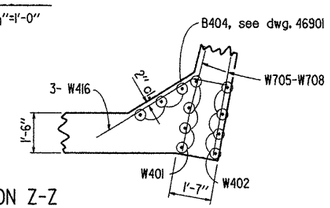

SECTION Z-Z
3/8" = 1'-0"

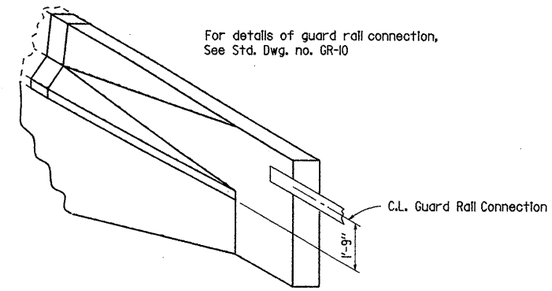

THREE DIMENSIONAL VIEW OF RAIL
N.T.S

BAR LIST - PER BENT (WINGS A & B)

Mark	No. Req'd.	Length	Pin Dia.
R401	12	3'-11"	2"
R402	8	4'-0"	2"
R403	12	11'-2"	Str.
R601	16	4'-5"	Str.
R602	6	5'-0"	Str.
W401	8	9'-1"	2"
W402	8	9'-5"	Str.
W403-W408	2 ea.	7'-1" to 3'-5"	2"
W409-W414	2 ea.	8'-11" to 4'-7"	Str.
W415	3	4'-10"	2"
W416	3	5'-6"	2"
W701	12	11'-2"	Str.
W702	4	8'-0"	Str.
W703	4	7'-1"	Str.
W704	4	6'-2"	Str.
W705	4	5'-3"	Str.
W706	4	4'-5"	Str.
W707	4	3'-6"	Str.
W708	4	12'-6"	5 1/4"
D500E	18	6'-2"	3 3/4"

Bending Diagram

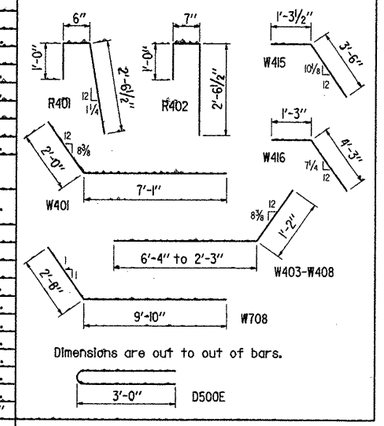

Note: Bars with an "E" suffix are epoxy coated and shall be measured and paid for as Reinforcing Steel- Bridge (Grade 60).

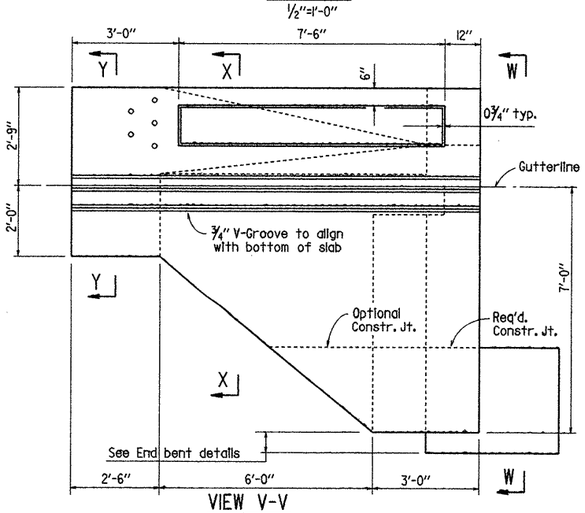

VIEW V-V
1/2"=1'-0"

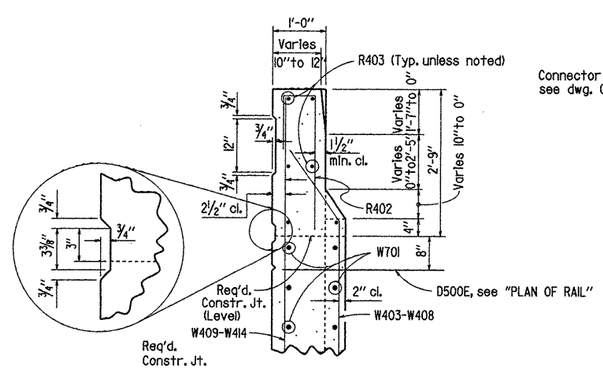

SECTION X-X
3/4"=1'-0"

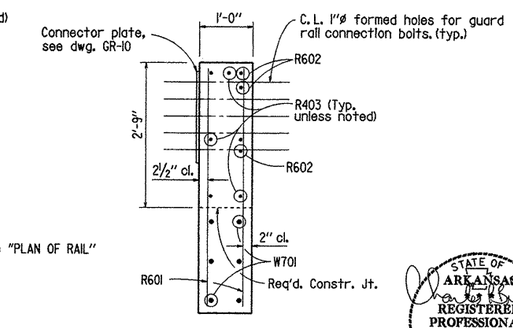

SECTION Y-Y
3/4"= 1'-0"

TABLE OF VARIABLES

Wing Location		Elev. "R"
Bent 1	Wing A	243.65
	Wing B	243.55
Bent 5	Wing A	241.75
	Wing B	241.57

STATE OF ARKANSAS
REGISTERED PROFESSIONAL ENGINEER
No. 4337
CHARLES P. BRAND

BRIDGE ENGINEER

DETAILS OF WING & RAIL
HWY. 63 OVERPASS

ROUTE SEC.

ARKANSAS STATE HIGHWAY COMMISSION

LITTLE ROCK, ARK.

DRAWN BY: LM DATE: 8-3-04 FILENAME: bl00547xl_wl.dgn
CHECKED BY: SWP DATE: 9-7-04 SCALE: As Shown
DESIGNED BY: JAC DATE: 2-7-04

BRIDGE NO. 07019 DRAWING NO. 46903

DATE REVISED	DATE FILMED	DATE REVISED	DATE FILMED

FED. ROAD DIST. NO.	STATE	FED. AID PROJ. NO.	SHEET NO.	TOTAL SHEETS
6	ARK.			
JOB NO.		100547	110	331
07019	INT. BENT 2		46904	

(1)

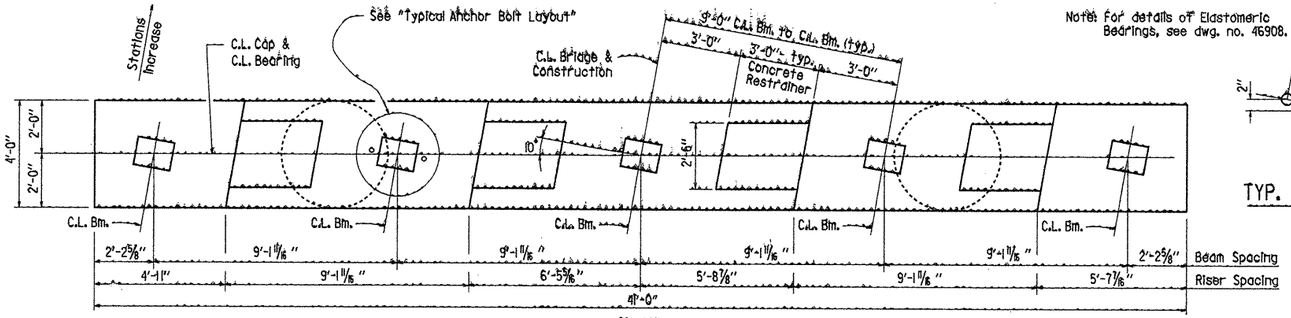

PLAN

Note: For details of Elastomeric Bearings, see dwg. no. 46908.

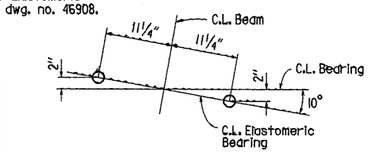

TYP. ANCHOR BOLT LAYOUT

1½" = 1'-0"

BAR LIST

Mark	No. Req'd.	Length	A	B	Pin Dia.
F401	92	9'-5"	8'-10½"	4½"	3"
B501 to B511	2 ea.	14'-4" to 19'-0"	3'-8"	3'-3" to 5'-7"	2½"
B512	24	16'-8"	2'-5"	5'-8"	2½"
B513	12	19'-2"	3'-8"	5'-8"	2½"
B514	10	14'-10"	3'-8"	5'-8"	2½"
B515	10	40'-8"			Str.
B516	2	38'-6"			Str.
B517	2	34'-10"			Str.
B518	2	31'-2"			Str.
C501	4	572'-8"			Spiral
F501	128	7'-5"	6'-10"	5"	3¾"
F502	352	3'-6"			3¾"
P500	20	10'-4"			2½"
P601	32	9'-2"			4½"
F701	46	17'-8"	16'-0"	7"	5¼"
F702	64	13'-2"	11'-6"	7"	5¼"
B901	8	43'-2"	40'-8"	10"	9"
B902	8	19'-0"			Str.
B903	12	17'-0"			9"
C901	40	17'-10"			Str.
C902	40	18'-8"			9"

Bending Diagram (Dimensions are out to out of bars.)

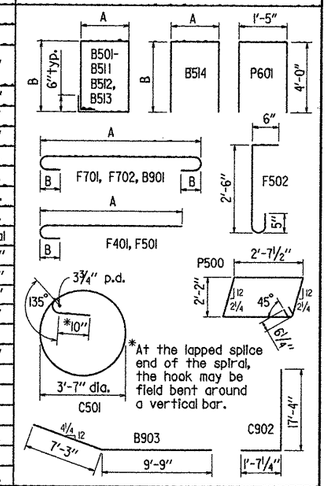

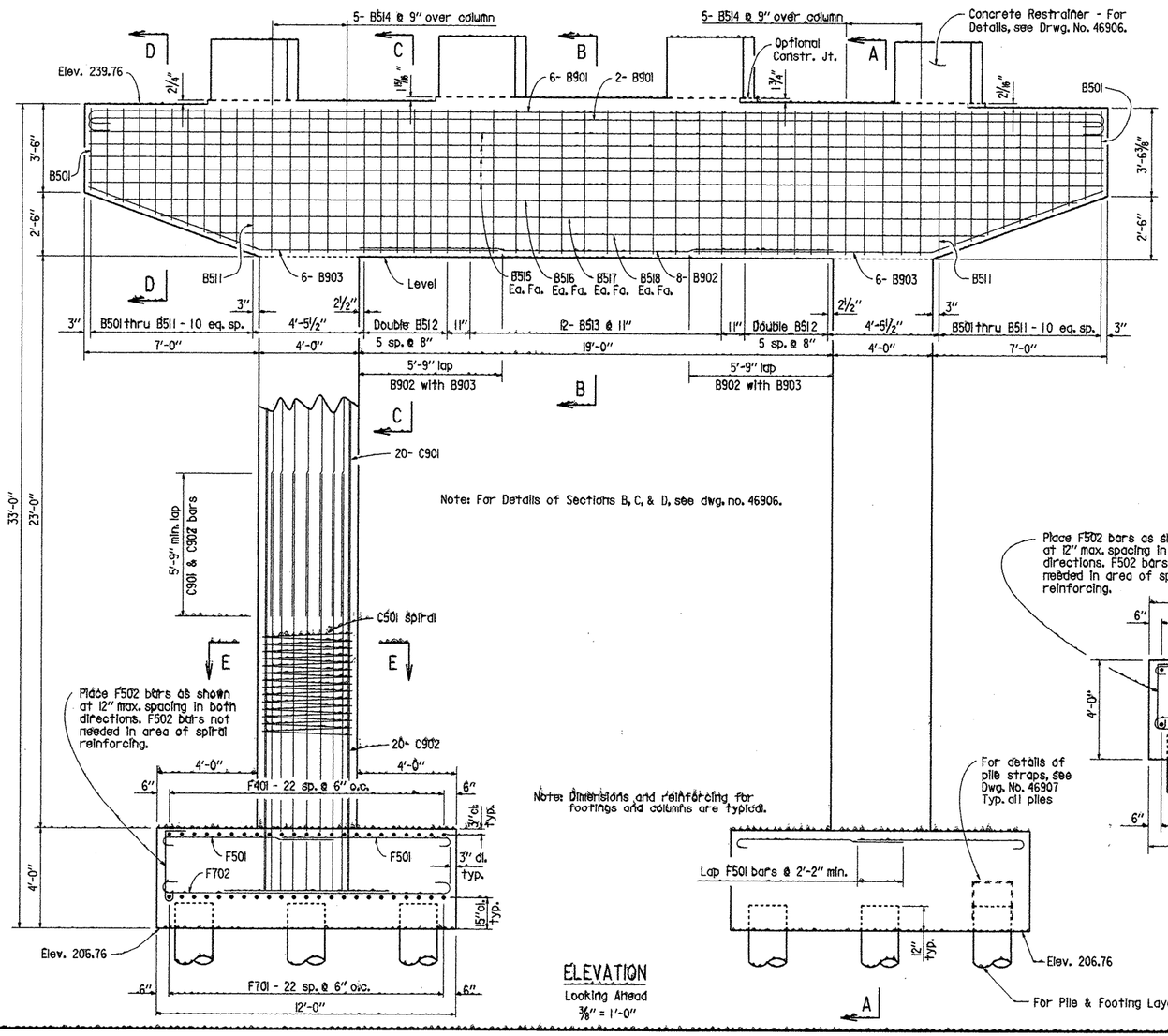

Note: For Details of Sections B, C, & D, see dwg. no. 46906.

Note: Dimensions and reinforcing for footings and columns are typical.

ELEVATION

Looking Ahead

⅜" = 1'-0"

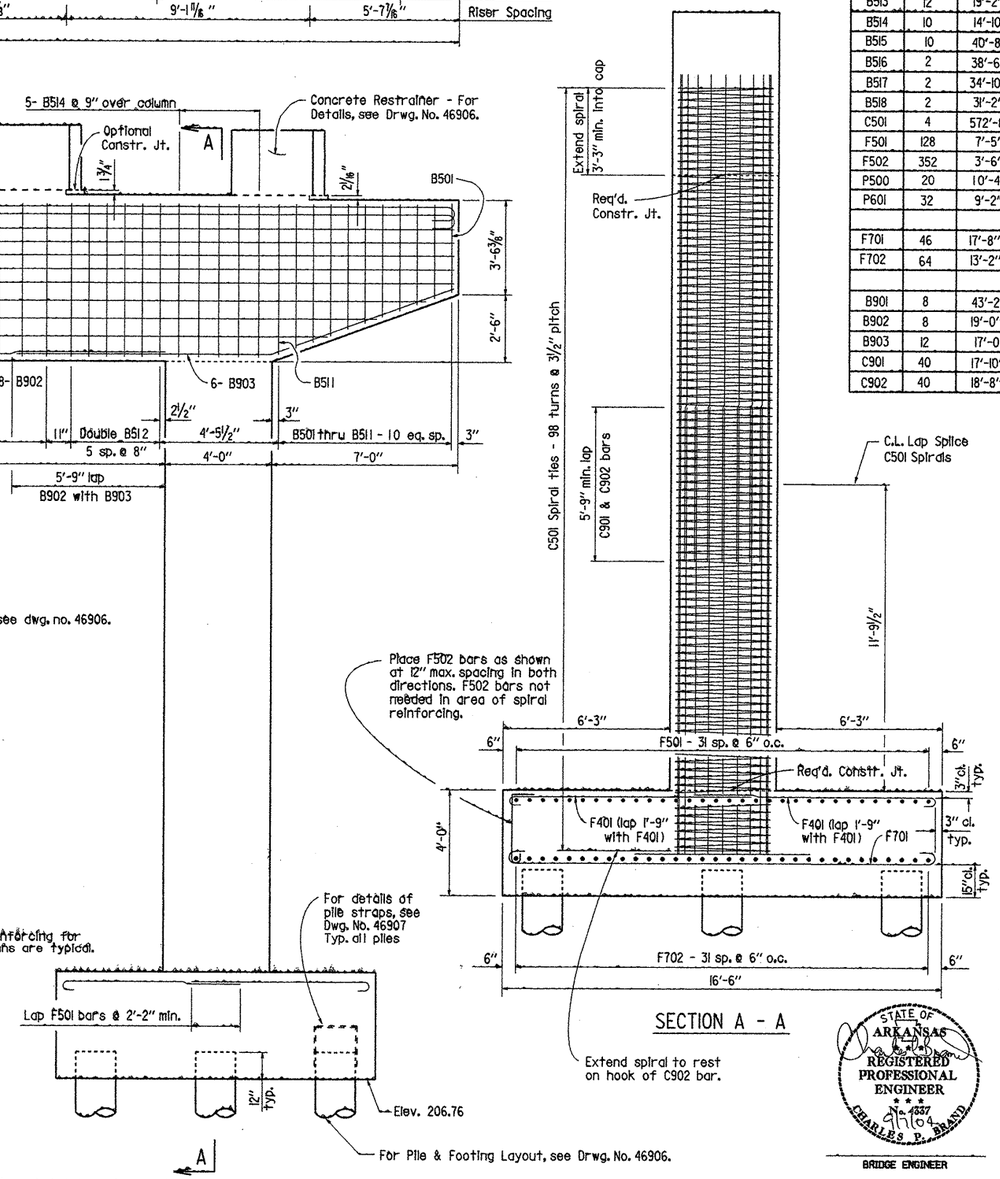

SECTION A - A

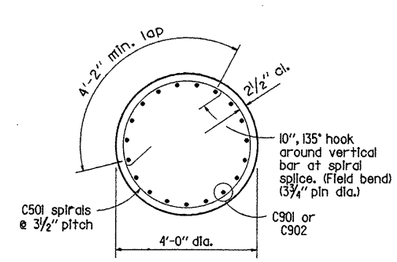

SECTION E - E

½" = 1'-0"

STATE OF ARKANSAS REGISTERED PROFESSIONAL ENGINEER No. 9337 CHARLES P. BRAND

BRIDGE ENGINEER

For General Notes, see Drwg. No. 46906.

DETAILS OF INT. BENT 2
HWY. 63 OVERPASS

ROUTE SEC.

ARKANSAS STATE HIGHWAY COMMISSION

LITTLE ROCK, ARK.

DRAWN BY: LM DATE: 7-30-04 FILENAME: bl00547_b2.dgn

CHECKED BY: SWP DATE: 9-7-04 SCALE: ⅜" = 1'-0" or as shown

DESIGNED BY: JAC DATE: 1-8-04

BRIDGE NO. 07019 DRAWING NO. 46904

DATE REVISED	DATE FILMED	DATE REVISED	DATE FILMED

FED. ROAD DIST. NO.	STATE	FED. AID PROJ. NO.	SHEET NO.	TOTAL SHEETS
6	ARK.			
JOB NO.		100547	111	331
07019		INT. BTS. 3 & 4	46905	

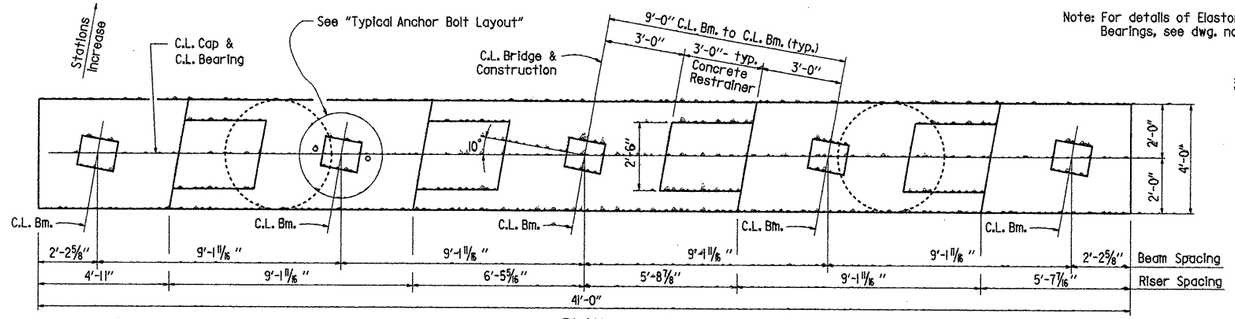

PLAN

Note: For details of Elastomeric Bearings, see dwg. no. 46908.

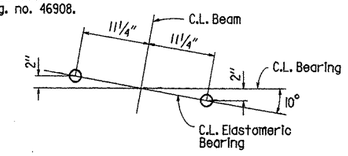

TYP. ANCHOR BOLT LAYOUT

1 1/2" = 1'-0"

BAR LIST - PER BENT

Mark	No. Req'd.	Length	A	B	Pin Dia.
F401	92	9'-5"	8'-10 1/2"	4 1/2"	3"
B501 to B511	2 ea.	14'-4" to 19'-0"	3'-8"	3'-3" to 5'-7"	2 1/2"
B512	24	16'-8"	2'-5"	5'-8"	2 1/2"
B513	12	19'-2"	3'-8"	5'-8"	2 1/2"
B514	10	14'-10"	3'-8"	5'-8"	2 1/2"
B515	10	40'-8"			Str.
B516	2	38'-6"			Str.
B517	2	34'-10"			Str.
B518	2	31'-2"			Str.
C501	4	572'-8"			Spiral
F501	128	7'-5"	6'-10"	5"	3 3/4"
F502	352	3'-6"			3 3/4"
P500	20	10'-4"			2 1/2"
P601	32	9'-2"			4 1/2"
F701	46	17'-8"	16'-0"	7"	5 1/4"
F702	64	13'-2"	11'-6"	7"	5 1/4"
B901	8	43'-2"	40'-8"	10"	9"
B902	8	19'-0"			Str.
B903	12	17'-0"			9"
C901	40	17'-10"			Str.
C902	40	18'-8"			9"

Bending Diagram (Dimensions are out to out of bars.)

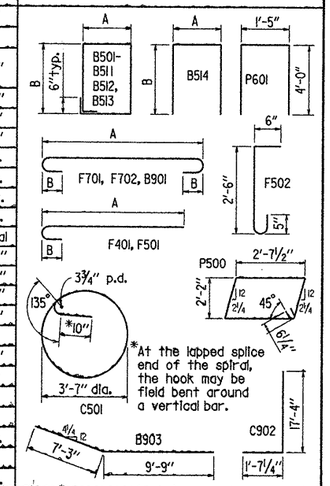

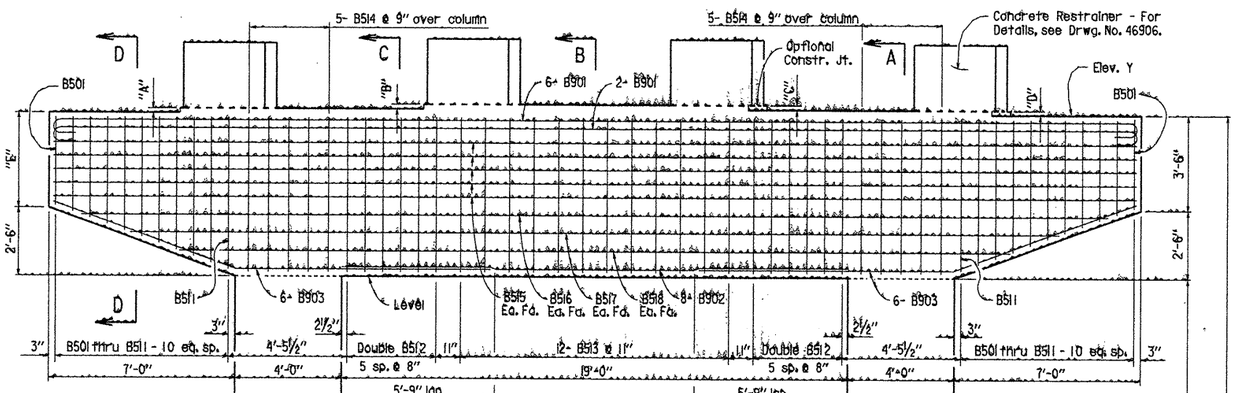

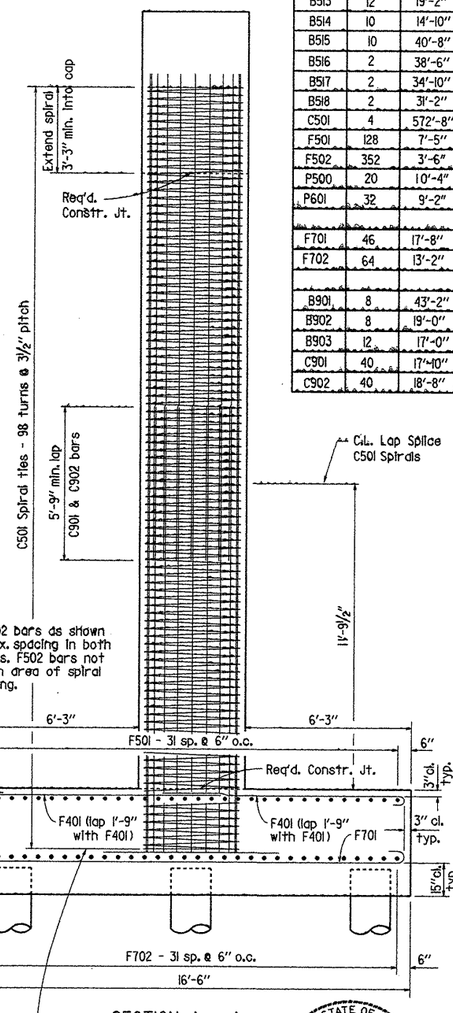

SECTION A - A

TABLE OF VARIABLES

Bt. No.	Elev. X	Elev. Y	A	B	C	D	E
3	206.73	239.73	2"	1 3/4"	1 15/16"	2 1/4"	3'-6 7/16"
4	205.69	238.69	1 7/8"	1 9/16"	2 3/16"	2 1/2"	3'-7 1/4"

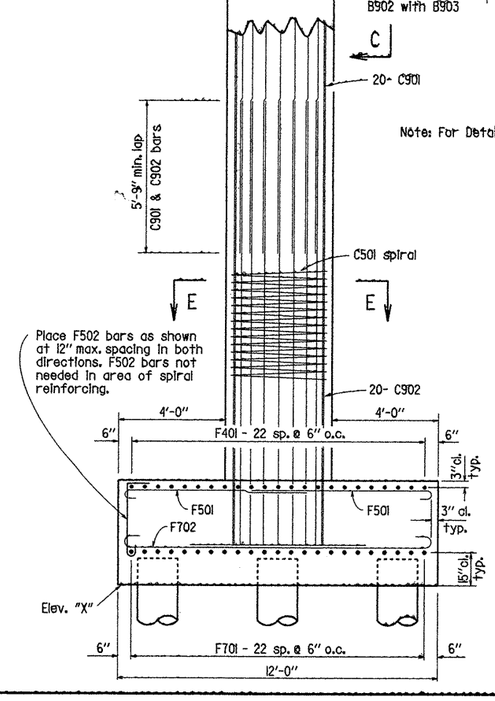

ELEVATION

Looking Ahead

3/8" = 1'-0"

Note: Dimensions and reinforcing for footings and columns are typical.

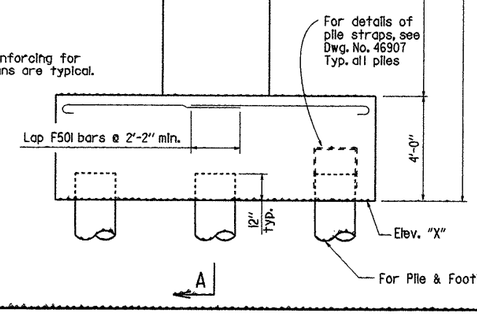

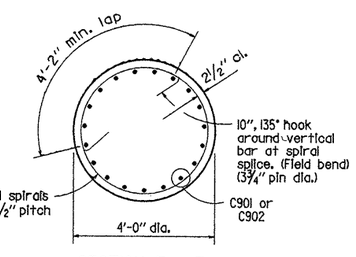

SECTION E - E

1/2" = 1'-0"

For General Notes, see Drwg. No. 46906.

STATE OF ARKANSAS
No. 4937
REGISTERED PROFESSIONAL ENGINEER
9-7-04
CHARLES P. BRAND

BRIDGE ENGINEER

DETAILS OF INT. BENTS 3 & 4
HWY. 63 OVERPASS

ROUTE SEC.

ARKANSAS STATE HIGHWAY COMMISSION

LITTLE ROCK, ARK.

DRAWN BY:	LM	DATE:	7-30-04	FILENAME:	b100547_b2.dgn
CHECKED BY:	SWP	DATE:	9-7-04	SCALE:	3/8" = 1'-0" or as shown
DESIGNED BY:	JAC	DATE:	7-8-04		

BRIDGE NO. 07019 DRAWING NO. 46905

DATE REVISED	DATE FILMED	DATE REVISED	DATE FILMED	FED. ROAD DIST. NO.	STATE	FED. AID PROJ. NO.	SHEET NO.	TOTAL SHEETS
				6	ARK.			
				JOB NO.		100547	112	331
				(1) 07019		INT. BENTS	46906	

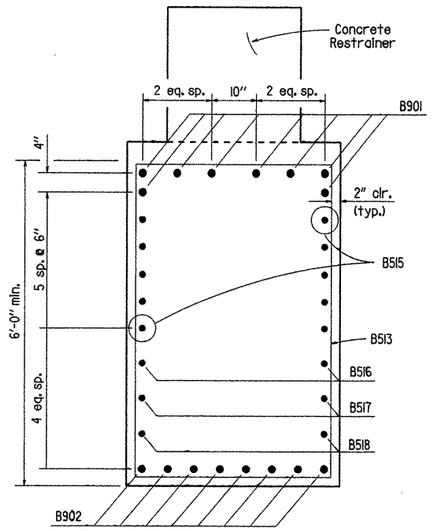

SECTION B - B
3/4" = 1'-0"

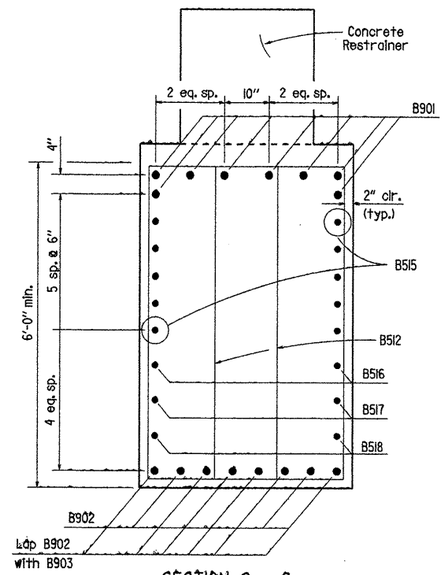

SECTION C - C
3/4" = 1'-0"

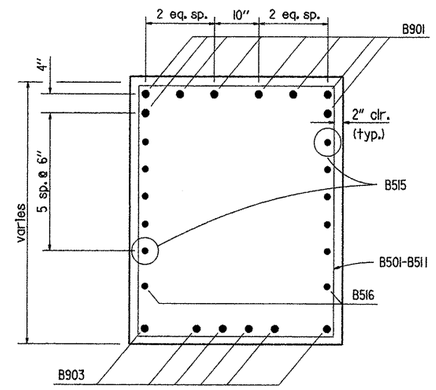

SECTION D - D
3/4" = 1'-0"

GENERAL NOTES

All concrete shall be Class "S" with a minimum 28 day compressive strength, f'c = 3,500 psi. Concrete shall be poured in the dry and all exposed corners to be chamfered 3/4" unless otherwise noted.

All reinforcing steel shall conform to AASHTO M31 or M53, Grade 60 (yield strength = 60,000 psi.).

Top reinforcing bars shall be properly placed to avoid interference with anchor bolts or sheet metal sleeves.

For additional information see layout.

NOTES FOR SPIRAL REINFORCING :

Spiral reinforcing shall be plain round or deformed steel bars meeting the requirements of AASHTO M31 or M53 (Grade 60) or shall be cold drawn wire meeting the requirements of AASHTO M32 or M225 (Grade 70) with a minimum diameter of 0.625".

Spiral reinforcement shall be paid for at the contract unit price bid per pound for "Reinforcing Steel-Bridge (Grade 60)". No additional payment shall be made for spacers, additional splices, or bracing needed for assembly, shipping, handling, or erecting.

Contractor may elect to use a different number of spiral lapped splices per column. In no case shall a spiral be lapped within 5'-9" of the top or bottom of the column.

Splices in spiral reinforcement shall be lapped a minimum of 80 bar diameters.

Spiral reinforcement at lapped splices shall be terminated by a 135° hook with a 10" tail around a vertical bar. Hook may be field bent. Ends of spirals not lapped shall be terminated with 1 1/2 turns and a 135° hook with a 10" tail around a vertical bar.

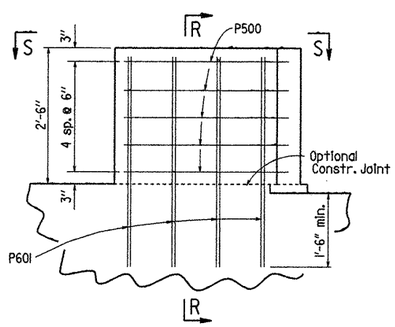

CONCRETE RESTRAINER
3/4" = 1'-0"

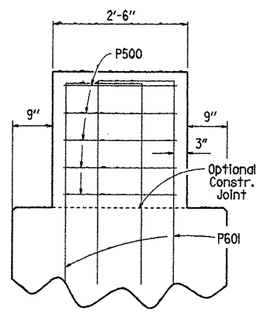

SECTION R - R
3/4" = 1'-0"

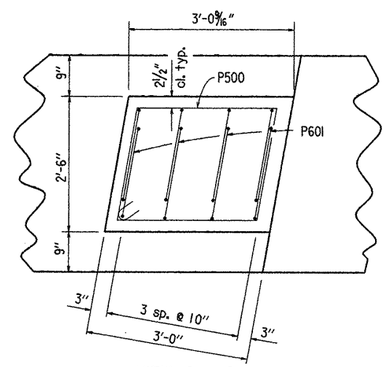

VIEW S - S
3/4" = 1'-0"

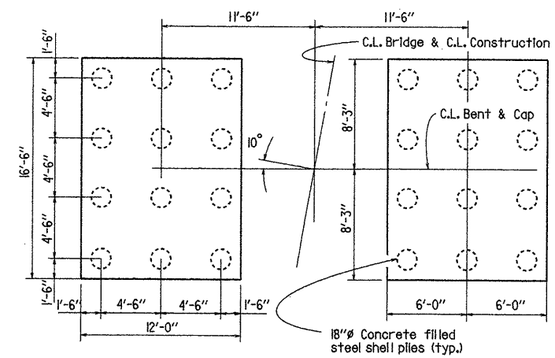

DETAIL OF PILE & FOOTING LAYOUT
3/16" = 1'-0"

STATE OF ARKANSAS
REGISTERED PROFESSIONAL ENGINEER
No. 4937
9/7/04
CHARLES P. BRAND
BRIDGE ENGINEER

DETAILS COMMON TO INT. BENTS
HWY. 63 OVERPASS

ROUTE SEC.

ARKANSAS STATE HIGHWAY COMMISSION

LITTLE ROCK, ARK.

DRAWN BY: LM DATE: 8-12-04 FILENAME: b100547_b2.dgn
CHECKED BY: SLP DATE: 9-7-04 SCALE: 3/8" = 1'-0" or as shown
DESIGNED BY: JAC DATE: 1-8-04

BRIDGE NO. 07019 DRAWING NO. 46906

DATE REVISED	DATE FILMED	DATE REVISED	DATE FILMED	FED. ROAD DIST. NO.	STATE	FED. AID PROJ. NO.	SHEET NO.	TOTAL SHEETS
				6	ARK.			
				JOB NO.		100547	113	331
				① 07019		PILE DETAILS	46907	

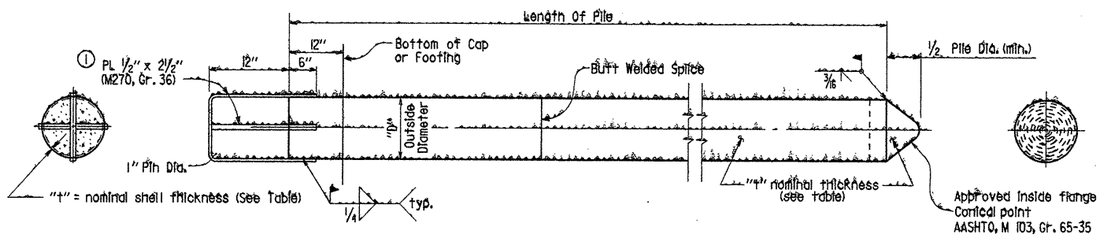

Note:
Steel pile tip will not be paid for directly, but shall be subsidiary to the item "Steel Shell Piling"

CONCRETE FILLED STEEL SHELL PILES

GENERAL NOTES FOR CONCRETE FILLED STEEL SHELL PILES

Steel shells shall conform ASTM A252, Grade 3, (Fy = 45,000 psi.).

Concrete used for filling of steel shell shall be Class S with a minimum 28 day compressive strength, f'c = 3,500 psi. and shall be poured in the dry.

See bridge layout for size and length of shell piles and for additional driving information.

Concrete and structural steel, including welding, will not be paid for directly, but will be considered as part of the corresponding items "Steel Shell Piling (18" dia.)"

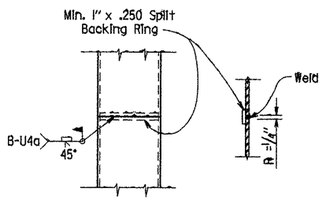

TYPICAL SPLICE DETAILS

① Reinforcing bars shall be placed to minimize interference with anchor bolts and cap reinforcing.

① In place of the 1/2" x 2 1/2" plates, the Contractor may use 2 pairs of #8 reinforcing bars (ASTM A706, Grade 60).

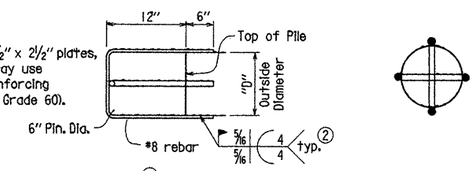

② Welding shall comply with ANSI/AWS D1.4 Structural Welding Code-Reinforcing Steel and applicable portions of ANSI/AWS D1.5 Bridge Welding Code.

ALTERNATE FOR 1/2" x 2 1/2" PLATE

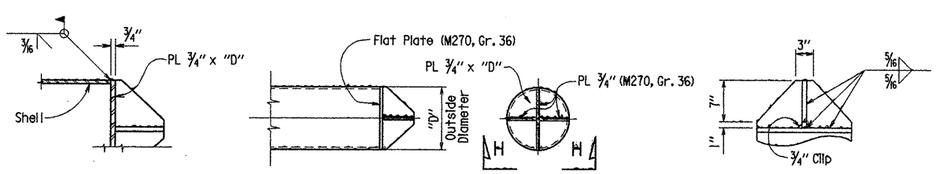

PART SECTION

ELEVATIONS

SECTION H-H

ALTERNATE VANED TIP DETAIL

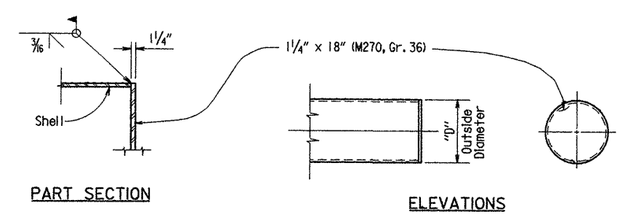

PART SECTION

ELEVATIONS

ALTERNATE FLAT TIP DETAIL

TABLE FOR SHELL PILES

OUTSIDE DIAMETER "D"	"t"-NOMINAL SHELL THICKNESS
18"	0.50"

STATE OF ARKANSAS
REGISTERED PROFESSIONAL ENGINEER
No. 4937
9/1/04
CHARLES P. BRAND

BRIDGE ENGINEER

DETAILS OF CONCRETE FILLED STEEL SHELL PILES

ROUTE 63 SEC. 9

ARKANSAS STATE HIGHWAY COMMISSION

LITTLE ROCK, ARK.

DRAWN BY: JAC DATE: 8-26-04 FILENAME: bl00547_ssp.dgn
CHECKED BY: AMS DATE: 8/27/04 SCALE: None
DESIGNED BY: Std. DATE:

BRIDGE NO. 07019 DRAWING NO. 46907

DATE REVISED	DATE FILMED	DATE REVISED	DATE FILMED	FED. ROAD DIST. NO.	STATE	FED. AID PROJ. NO.	SHEET NO.	TOTAL SHEETS
				6	ARK.			
				JOB NO.		100547	114	331
				(1) 07019		ELASTO. BRGS.	46908	

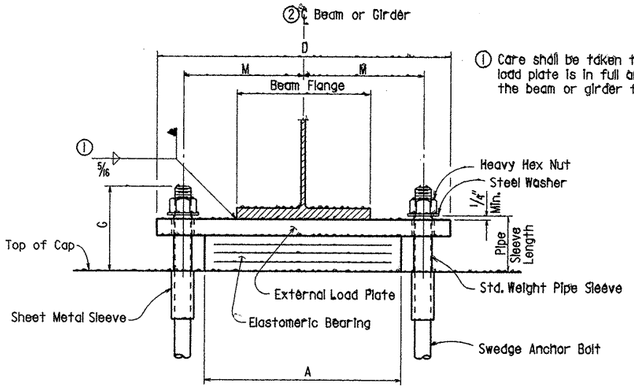

FRONT VIEW - AT BENT NOS. 2, 3, & 4

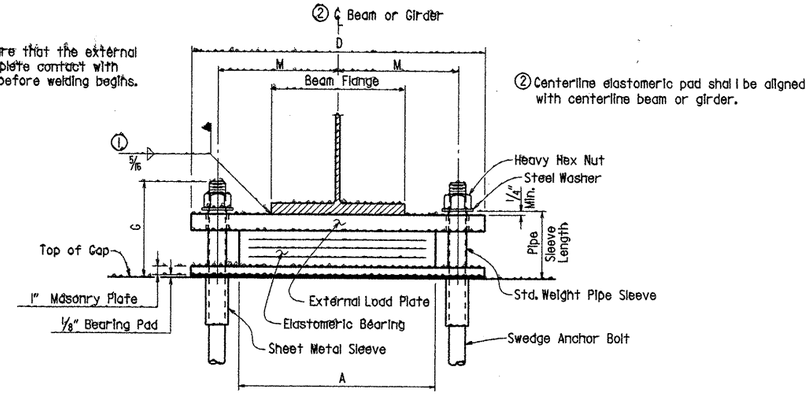

FRONT VIEW - AT BENT NOS. 1 & 5

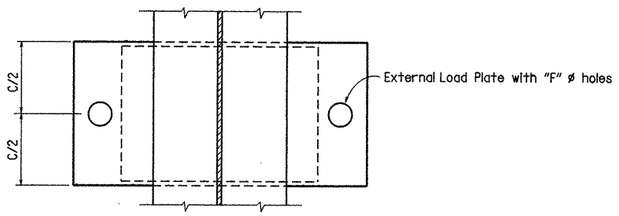

PLAN VIEW - AT BENT NOS. 2, 3, 4

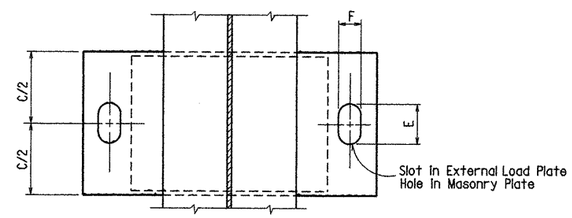

PLAN VIEW - AT BENT NOS. 1&5

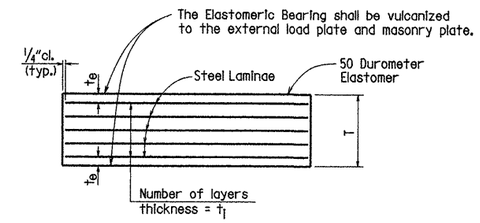

t_e = thickness of elastomer cover on top and bottom of pad

t_1 = thickness of elastomer between steel laminae

N = number of elastomer layers of thickness t_1

ELASTOMERIC BEARING

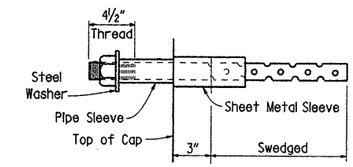

ANCHOR BOLT DETAIL

NOTE: Anchor Bolts may be cast in place or drilled and grouted into place. If Anchor Bolts are to be cast in place, the Galvanized Sheet Metal Sleeves will not be required.

If Anchor Bolts are to be drilled and grouted in place, the Galvanized Sheet Metal Sleeves shall be cast in place as shown. Sleeves shall be dry packed with styrofoam, urethane foam or approved equal prior to pouring of concrete. After pouring of the cap and prior to erection of Structural Steel, the dry pack shall be removed and holes for the anchor bolts shall be accurately drilled into the masonry. Bolts placed in drilled holes shall be accurately set and fixed using a QPL approved epoxy or non-shrink grout that completely fills the holes. Galvanized Sheet Metal Sleeves will not be paid for directly, but will be considered subsidiary to the item "Structural Steel in Beam Spans, (M 270, Gr. 50)"

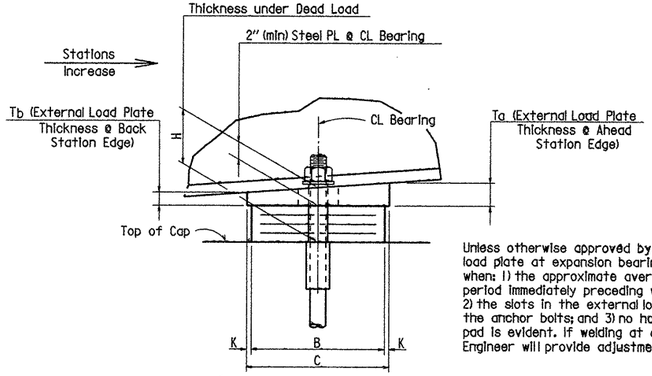

SIDE VIEW - AT BENT NOS. 2, 3 & 4

Unless otherwise approved by the Engineer, welding of the external load plate at expansion bearings to the girder will be allowed only when: 1) the approximate average air temperature during the 24 hour period immediately preceding welding is between 40° F and 80° F; and 2) the slots in the external load plate are positioned to center on the anchor bolts; and 3) no horizontal deformation of the elastomeric pad is evident. If welding at other temperatures is required, the Engineer will provide adjustment data.

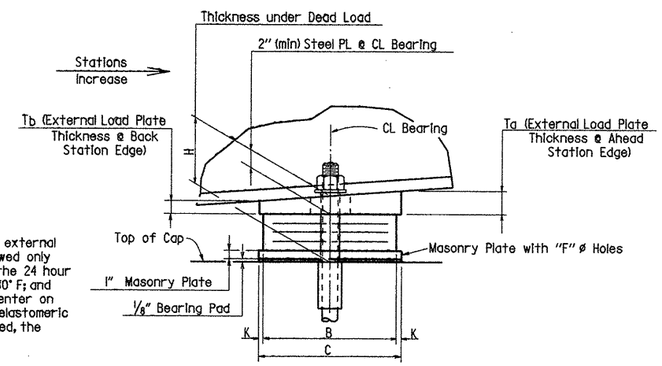

SIDE VIEW - AT BENT NOS. 1 & 5

GENERAL NOTES

Elastomeric Bearings shall conform to Section 808 and shall be paid for at the unit price bid for "Elastomeric Bearings."

External load plates and masonry plates shall conform to AASHTO M 270, Grade 36. Pipe sleeves shall be ASTM A53, Grade B, and shall be galvanized to conform to AASHTO M 232, Class C or AASHTO M 298, Class 50.

External load plates and masonry plates shall be completely fabricated (including bevel and bolt holes) and shall be cleaned before vulcanizing to the elastomeric bearing. Surfaces in contact with the elastomeric bearing shall be cleaned in accordance with subsection 808.03. Other surfaces shall be blast cleaned in accordance with subsection 807.84(b) for painted steel.

Anchor Bolts, Washers and Nuts shall conform to subsection 807.07. The anchor bolt grade of steel shall be as specified in the "Table of Fabricator Variables". Indentations shall be circular with rounded bottoms and staggered as shown in the details.

Pipe Sleeves, Anchor Bolts, Washers and Nuts shall be paid for at the unit price bid for "Structural Steel in Beam Spans (M270, Gr. 50)". External load plates, masonry plates and 1/8" bearing pads will not be measured or paid for separately but will be considered included in the unit bid price for "Elastomeric Bearings".

Bearings with masonry plates shall be seated in accordance with subsection 807.66.

Bearings without masonry plates shall be seated in accordance with subsection 808.08.

TABLE OF FABRICATOR VARIABLES

BRIDGE NO.	LOCATION: BENT NO(S).		BEAM OR GIRDER NO.	BEARING TYPE	NO. of BEARINGS EACH BENT	*MAXIMUM DESIGN LOAD (KIPS)	G	H	ELASTOMERIC PAD: A	B	N	t_1	t_e	NO. & THICKNESS OF STEEL LAMINAE	T	EXTERNAL LOAD PLATE: C	D	**E	F	K	M	T_a	T_b	ANCHOR BOLT: ANCHOR BOLT (ø x L)	GRADE	PIPE SLEEVE SIZE (ø x L)	SHEET METAL SLEEVE SIZE (ø x L)	STEEL WASHER SIZE (O.D.)
07019	1		All	Exp.	5	95	9 3/4"	6 11/16"	14 1/2"	11"	5	1/2"	1/4"	6 @ 12 ga.	3 5/8"	12"	26"	5"	2 5/8"	1/2"	10"	2.07"	1.93"	1 3/4"ø x 30"	55	2"ø x 7"	4"ø x 9"	3 3/8"
	2		All	Fix	5	206	11 1/2"	7 7/8"	16 1/2"	11"	9	1/2"	1/4"	10 @ 12 ga.	6 1/16"	12"	29"	-	3 1/8"	1/2"	11 1/4"	2.03"	1.97"	2 1/4"ø x 36"	55	2 1/2"øx 8 1/4"	4"ø x 9"	4"
	3		All	Fix	5	223	10 3/4"	7 1/4"	16 1/2"	11"	8	1/2"	1/4"	9 @ 12 ga.	5 7/16"	12"	29"	-	3 1/8"	1/2"	11 1/4"	1.97"	2.03"	2 1/4"ø x 36"	55	2 1/2"øx 7 1/2"	4"ø x 9"	4"
	4		All	Fix	5	206	11 1/2"	7 7/8"	16 1/2"	11"	9	1/2"	1/4"	10 @ 12 ga.	6 1/16"	12"	29"	-	3 1/8"	1/2"	11 1/4"	1.90"	2.10"	2 1/4"ø x 36"	55	2 1/2"øx 8 1/4"	4"ø x 9"	4"
	5		All	Exp.	5	95	9 3/4"	6 11/16"	14 1/2"	11"	5	1/2"	1/4"	6 @ 12 ga.	3 5/8"	12"	26"	5"	2 5/8"	1/2"	10"	1.86"	2.14"	1 3/4"ø x 30"	55	2"ø x 7"	4"ø x 9"	3 3/8"

* Maximum Design Load = Service Load

** The dimension "E" does not apply to masonry plates - See "SIDE VIEW - AT Bent nos. 1 & 5

STATE OF ARKANSAS REGISTERED PROFESSIONAL ENGINEER No. 9604 CHARLES P. BRAND

BRIDGE ENGINEER

DETAILS OF ELASTOMERIC BEARINGS

HWY. 135 INTERCHANGE (F)

ROUTE SEC.

ARKANSAS STATE HIGHWAY COMMISSION

LITTLE ROCK, ARK.

DRAWN BY: LM DATE: 8-24-04 FILENAME: bl00547xl_eb.dgn

CHECKED BY: JAC DATE: 9-7-04 SCALE: NONE

DESIGNED BY: JAC DATE: 1-9-04

BRIDGE NO. 07019 DRAWING NO. 46908

DATE REVISED	DATE FILMED	DATE REVISED	DATE FILMED	FED. ROAD DIST. NO.	STATE	FED. AID PROJ. NO.	SHEET NO.	TOTAL SHEETS
				6	ARK.			
				JOB NO.		100547	115	331
				(1) 07019		CONT. UNIT	46909	

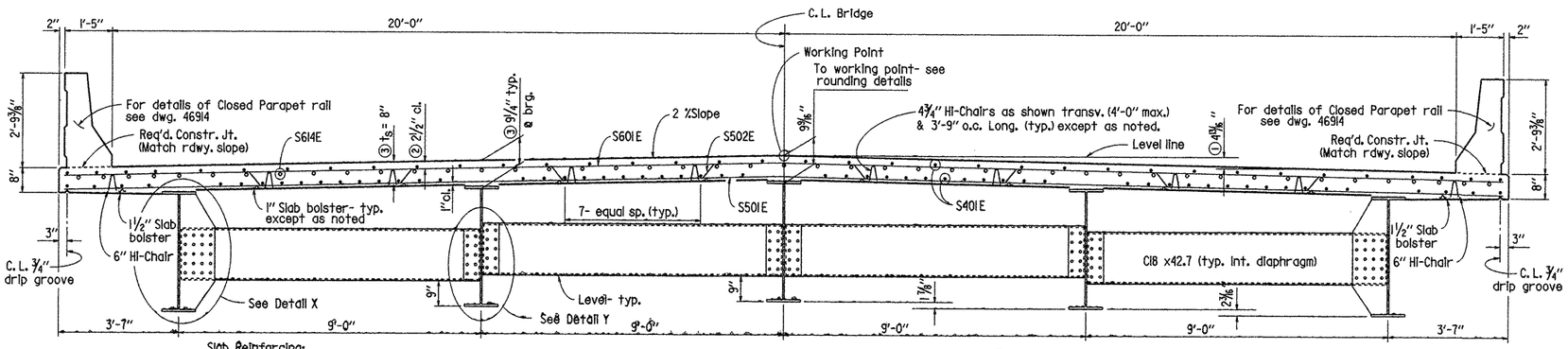

Slab Reinforcing:

Longitudinal: S401E Top & Bottom
S614E placed as shown over interior supports (See Reinf. Plan)

Transverse: S501E @ 14"o.c. in bottom, S502E @ 14"o.c. bent up over beams
S601E @ 14"o.c. in top, S602E-S612E @ 7" top & bott. in skew

Note: The superstructure details shown are for use when removable deck forming is used and are the basis for measurement of Class S(AE) Concrete. See Std. Dwg. No. 14991 for allowable modifications and for tolerances when permanent steel bridge deck forms are used.

TYP. ROADWAY SECTION

½" = 1'-0"

① Working point to gutterline

② Tolerance: Minus = ¼"
Plus = Equal to amount of slab thickening used to meet slab thickness tolerance-
See "ADJUSTMENT FOR SLAB THICKNESS TOLERANCE WHEN REMOVABLE DECK FORMING IS USED".

③ See "ADJUSTMENT FOR SLAB THICKNESS TOLERANCE WHEN REMOVABLE DECK FORMING IS USED".

Note: Class I Protective Surface Treatment shall be applied to the Roadway Surface and the Face and Top of Concrete Parapet Rail. Class 3 Textured Coating Finish shall be applied to all areas specified in Special Provision Job 100547 "Textured Coating Finish".

Note: At the Contractor's option, two straight epoxy coated #5 bars, top and bottom, may be substituted for bar S502E. Payment will be based on weight of S502E.

Note: Bars with an "E" suffix are epoxy coated.

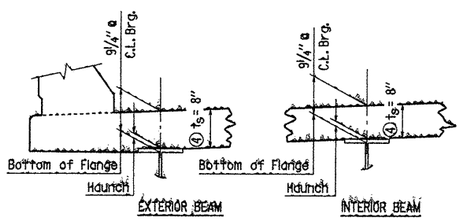

④ Tolerance for slab thickness is - ¼", + ½"
See dwg. no. 14991 when permanent steel deck forms are used.

Haunch forming is required and shall be adjusted to maintain slab thickness and grade. Beam haunch dimension may vary within the following limits.

Minimum - occurs when top flange contacts bottom reinforcing steel;
Maximum - top flange thickness plus 1¾".

Payment for concrete shall be based on removable deck forming; No adjustment in quantities will be made to maintain tolerances.

ADJUSTMENT FOR SLAB THICKNESS TOLERANCE WHEN REMOVABLE DECK FORMING IS USED

N.T.S.

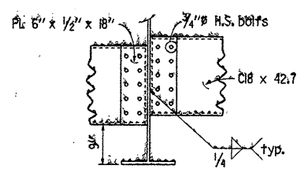

DETAIL Y

¾"=1'-0"

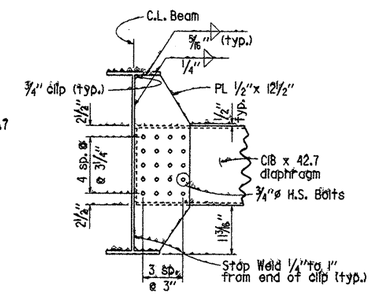

DETAIL X

¾"=1'-0"

For General notes, see dwg. no. 46916

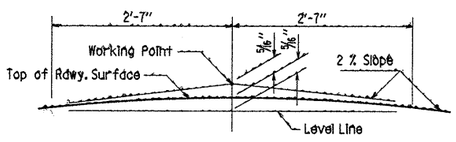

NOTE: Working Point matches Theoretical Roadway Grade.

ROUNDING DETAIL

N.T.S.

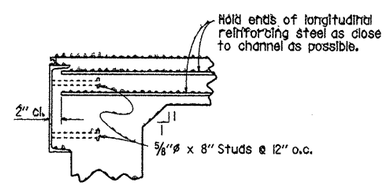

ANCHOR DETAIL

NTS

STATE OF ARKANSAS
REGISTERED PROFESSIONAL ENGINEER
No. 4337
9/1/04
CHARLES P. BRAND

BRIDGE ENGINEER

SHEET 1 OF 8

DETAILS OF 308'-0" CONTINUOUS W-BEAM UNIT HWY. 135 INTERCHANGE (F)

ROUTE SEC.

ARKANSAS STATE HIGHWAY COMMISSION

LITTLE ROCK, ARK.

DRAWN BY: LM DATE: 2-25-04 FILENAME: bl00547xl_sl.dgn
CHECKED BY: JAC DATE: 9-7-04 SCALE: As shown
DESIGNED BY: JAC DATE: 1-9-04

BRIDGE NO. 07019 DRAWING NO. 46909

DATE REVISED	DATE FILMED	DATE REVISED	DATE FILMED	FED. ROAD DIST. NO.	STATE	FED. AID PROJ. NO.	SHEET NO.	TOTAL SHEETS
				6	ARK.			
				JOB NO.		100547	116	331
				07019		CONT. UNIT	46910	

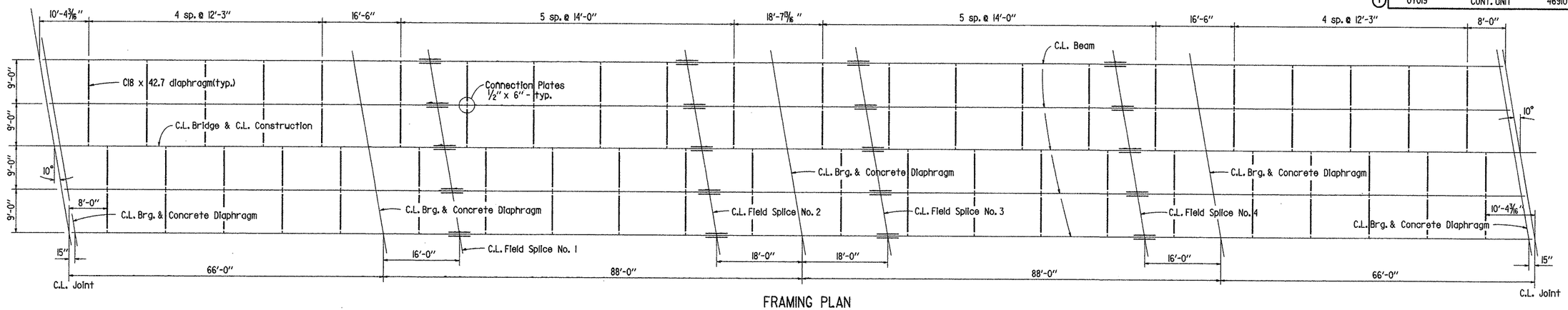

FRAMING PLAN

3/32" = 1'-0"

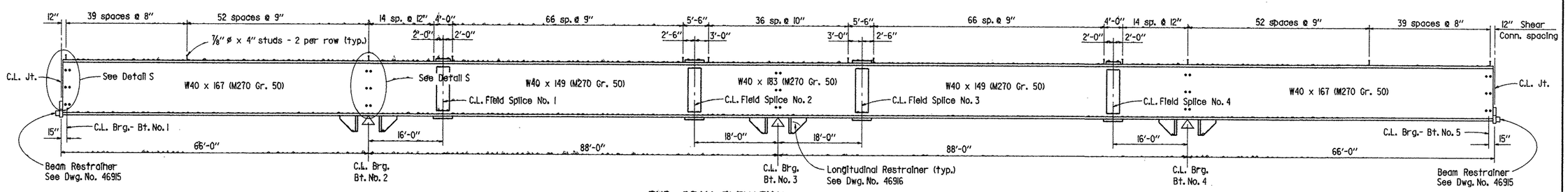

TYP. BEAM ELEVATION

NTS

Note: Bolted field splices shown may be eliminated or shop welded splices may be substituted with approval of the Bridge Engineer. Payment will be made on the basis of of the plan quantities.

All field splice bolts shall be 7/8"ø Hi-str. bolts
All holes for splice bolts shall be 15/16"ø
All field splice plates shall be AASHTO M270 Gr. 50 steel.

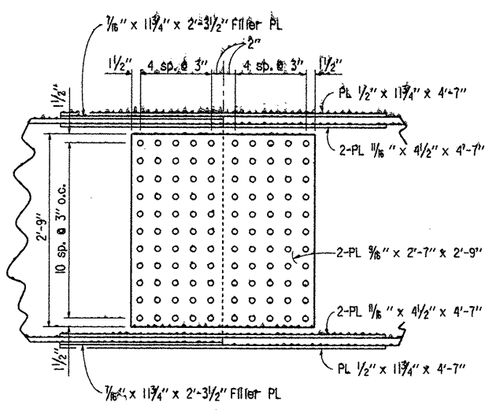

DETAIL OF FIELD SPLICE #2 OR #3

1" = 1'-0"

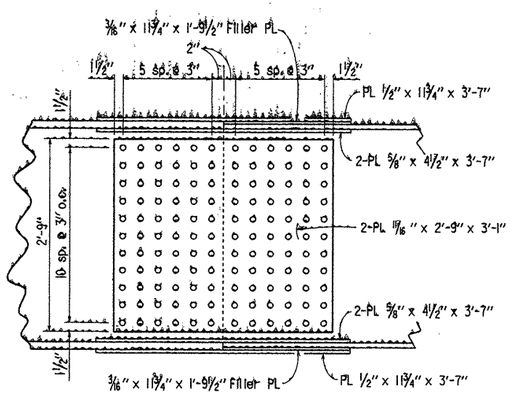

DETAIL OF FIELD SPLICE #1 OR #4

1" = 1'-0"

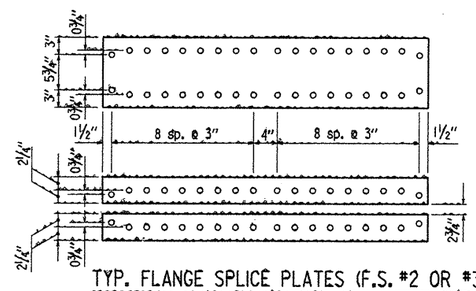

TYP. FLANGE SPLICE PLATES (F.S. #2 OR #3)

1" = 1'-0"

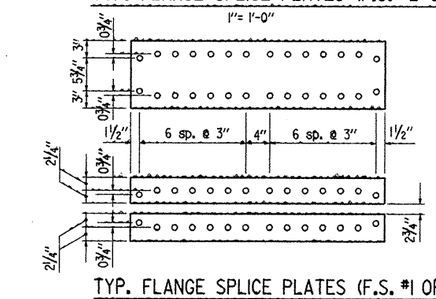

TYP. FLANGE SPLICE PLATES (F.S. #1 OR #4)

1" = 1'-0"

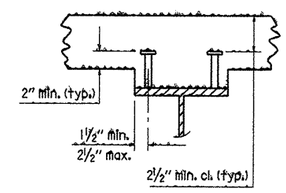

Stud shear connectors shown shall be 7/8"ø x 4" long, granular flux filled, solid fluxed or equal, and automatically end welded to the beam flange in accordance with the recommendations of the Manufacturer. 3/4"ø studs may be used in place of the 7/8"ø studs shown, at the ratio of 1.36 - 3/4"ø studs in place of one 7/8"ø stud. 7/8"ø studs will be used as basis for measurement of structural steel in shear connectors.

SHEAR CONNECTOR DETAIL

NTS

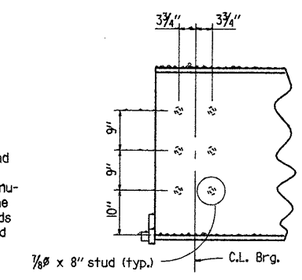

DETAIL S

NTS

STATE OF ARKANSAS
REGISTERED PROFESSIONAL ENGINEER
No. 4337
CHARLES P. BRAND
BRIDGE ENGINEER

SHEET 2 OF 8

DETAILS OF 308'-0" CONTINUOUS W-BEAM UNIT

HWY. 135 INTERCHANGE (F)

ROUTE SEC.

ARKANSAS STATE HIGHWAY COMMISSION

LITTLE ROCK, ARK.

DRAWN BY: LM DATE: 3-9-04
CHECKED BY: JAC DATE: 9-7-04
DESIGNED BY: JAC DATE: 1-9-04
FILENAME: b100547xl_s2.dgn
SCALE: 3/32" = 1'-0" or as shown

BRIDGE NO. 07019 DRAWING NO. 46910

DATE REVISED	DATE FILMED	DATE REVISED	DATE FILMED	FED. ROAD DIST. NO.	STATE	FED. AID PROJ. NO.	SHEET NO.	TOTAL SHEETS
				6	ARK.			
				JOB NO.		100547	117	331
				07019		CONT. UNIT	46911	

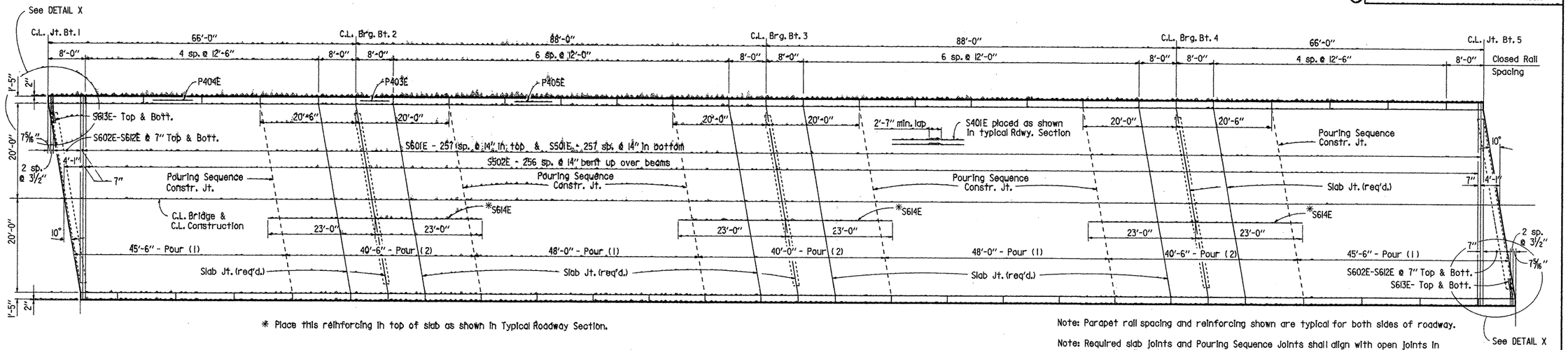

* Place this reinforcing in top of slab as shown in Typical Roadway Section.

Note: Parapet rail spacing and reinforcing shown are typical for both sides of roadway.

Note: Required slab joints and Pouring Sequence joints shall align with open joints in parapet rail at the gutterline.

Note: Pours with the same number may be placed simultaneously or separately. All Pours (1) must be placed before Pours (2) can be placed. 48 hours shall elapse between the end of a pour and the start of the next pour. 72 hours shall elapse between adjacent pours. Any railing pours made before the entire slab unit has been placed must be approved by the Bridge Engineer.

The Contractor must obtain approval from the Bridge Engineer for any deviations from the pouring sequence shown.

REINFORCING PLAN & SLAB POURING SEQUENCE

BAR LIST

Note: Bars with "E" designation shall be epoxy coated.

Mark	No. Req'd.	Length	Pin Dia.
S401E	828	36'-6"	Str.
S501E	258	42'-10"	Str.
S502E	257	43'-8"	3"
S601E	258	42'-10"	Str.
S602E-S612E	4 ea.	6'-3" to 39'-4"	Str.
S613E	8	7'-9'	4½"
S614E	135	46'-0"	Str.
D501E	64	7'-5"	2½"
D502E	24	4'-6"	2½"
D503E	96	7'-2"	2½"
D504E	36	4'-6"	2½"
D601E	120	8'-7"	Str.
D602E	80	2'-7"	Str.
P401E	624	6'-4"	2"
P402E	624	5'-7"	2"
P403E	80	7'-7"	Str.
P404E	80	12'-1"	Str.
P405E	120	11'-7"	Str.

Bending Diagrams (Dimensions are out to out of bars.)

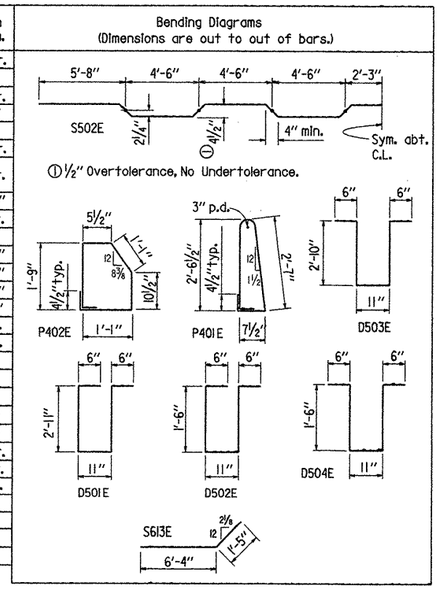

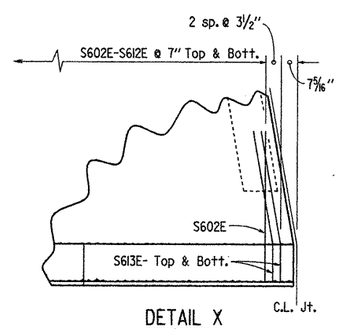

DETAIL X

⅜" = 1'-0"

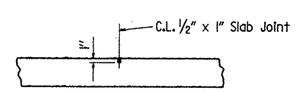

Use Type 6 Joint Sealer. See subsections 501.02(h) and 501.05(j). Joint Sealer shall be measured and paid for as Class S(AE) Concrete-Bridge. Slab Joints shall extend to the outside edge of the deck slab. Slab joints shall be installed before the parapet railing is poured. If slab joints are to be sawed, they shall be sawed as soon as the concrete has sufficiently set to allow sawing of the joint without damage to the slab. Slab joints shall be placed at all pouring sequence construction joints and required slab joint locations.

SLAB JOINT DETAIL

NTS

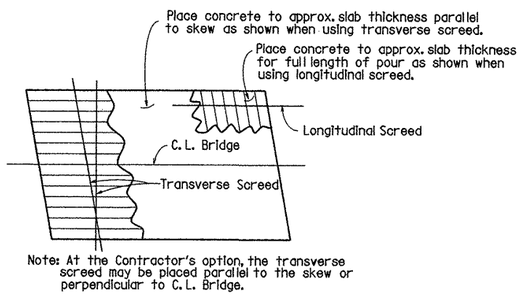

CONCRETE PLACEMENT PROCEDURE

NTS

STATE OF ARKANSAS REGISTERED PROFESSIONAL ENGINEER No. 4637 9/7/04 CHARLES P. BRAND

BRIDGE ENGINEER

SHEET 3 OF 8

DETAILS OF 308'-0" CONTINUOUS W-BEAM UNIT HWY. 135 INTERCHANGE (F)

ROUTE SEC.

ARKANSAS STATE HIGHWAY COMMISSION

LITTLE ROCK, ARK.

DRAWN BY: LM DATE: 3-3-04 FILENAME: bl00547xl_s3.dgn

CHECKED BY: JAC DATE: 9-7-04 SCALE: 3/32" = 1'-0" or as shown

DESIGNED BY: JAC DATE: 1-9-04

BRIDGE NO. 07019 DRAWING NO. 46911

DATE REVISED	DATE FILMED	DATE REVISED	DATE FILMED	FED. ROAD DIST. NO.	STATE	FED. AID PROJ. NO.	SHEET NO.	TOTAL SHEETS
8-23-05				6	ARK.			
				JOB NO.		100547	118	331
				07019		CONT. UNIT	46912	

1

Expansion Device :
Rdwy. Channel- C15x33.9 (Gr. 50)
Conn. Angle- split C15x33.9
Detail Device 1/8" high & provide 1/4" Shims using 1- 1/8" PL & 2- 1/16" PLs.
Neoprene strip seal with steel extrusion

Note: 1/2" polystyrene shall be used as a bond breaker between the concrete restrainer and the concrete diaphragm and may remain in place.

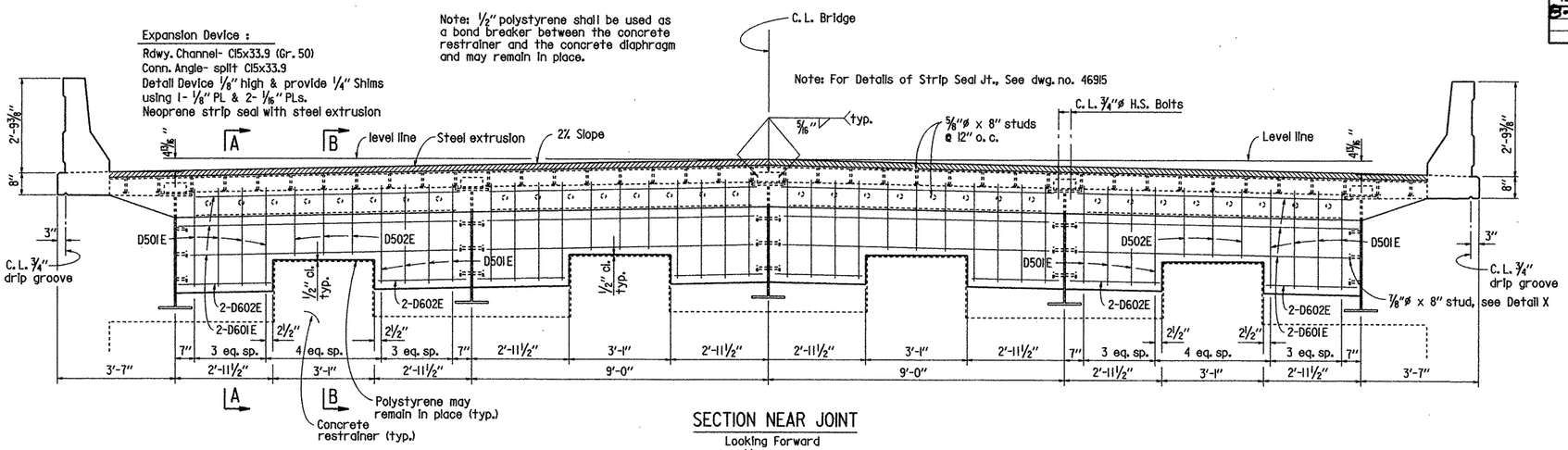

SECTION NEAR JOINT

Looking Forward
1/2" = 1'-0"

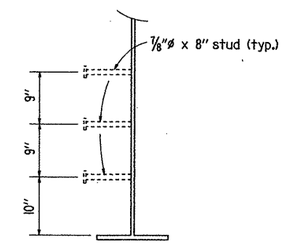

DETAIL X

NTS

For additional details, see dwg. 46910

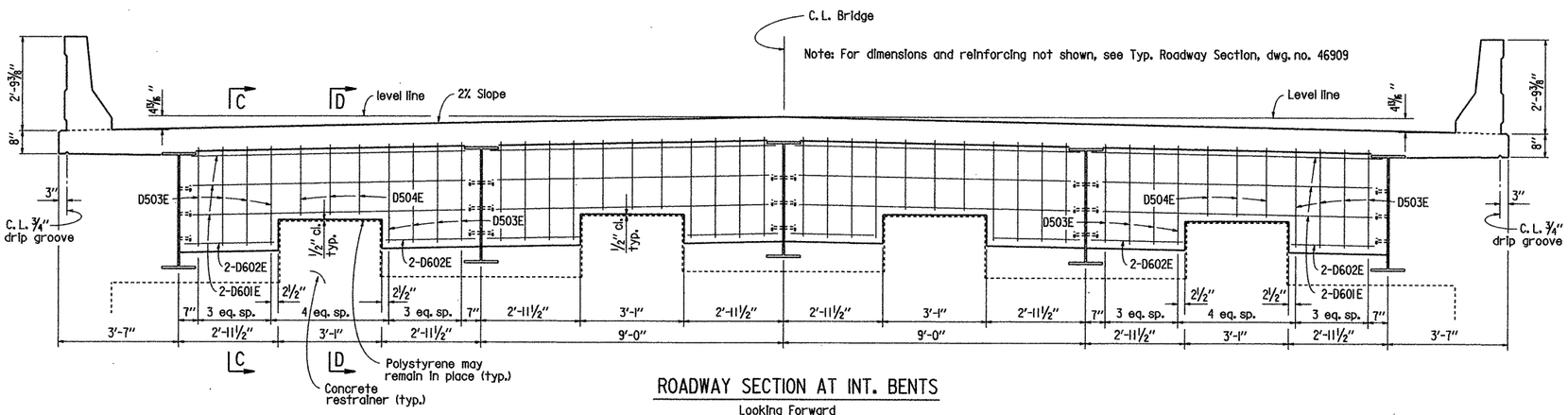

ROADWAY SECTION AT INT. BENTS

Looking Forward
1/2" = 1'-0"

Note: Longitudinal restrainers are not shown for clarity.

Note: For Sections A, B, C, & D, see dwg. no. 46913

STATE OF ARKANSAS
REGISTERED PROFESSIONAL ENGINEER
No. 4337
9/16/05
CHARLES P. BRAND
BRIDGE ENGINEER

SHEET 4 OF 8

DETAILS OF 308'-0" CONTINUOUS W-BEAM UNIT
HWY. 135 INTERCHANGE (F)

ROUTE SEC.

ARKANSAS STATE HIGHWAY COMMISSION
LITTLE ROCK, ARK.

DRAWN BY: LM DATE: 3-12-04 FILENAME: bl00547xl_s4.dgn
CHECKED BY: JAC DATE: 9-7-04 SCALE: As shown
DESIGNED BY: JAC DATE: 1-9-04

BRIDGE NO. 07019 DRAWING NO. 46912

DATE REVISED	DATE FILMED	DATE REVISED	DATE FILMED	FED. ROAD DIST. NO.	STATE	FED. AID PROJ. NO.	SHEET NO.	TOTAL SHEETS
				6	ARK.			
				JOB NO.		100547	119	331
				07019		CONT. UNIT		46913

1

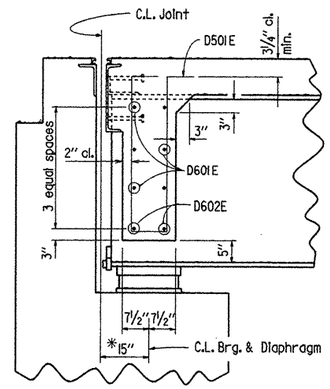

SECTION A-A
Scale: 3/4" = 1'-0"

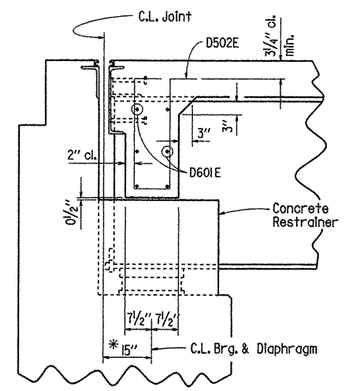

SECTION B-B
Scale: 3/4" = 1'-0"

* Measured along beam line.

Dimensions are perpendicular to C.L. Joint or C.L. Bent unless otherwise noted.

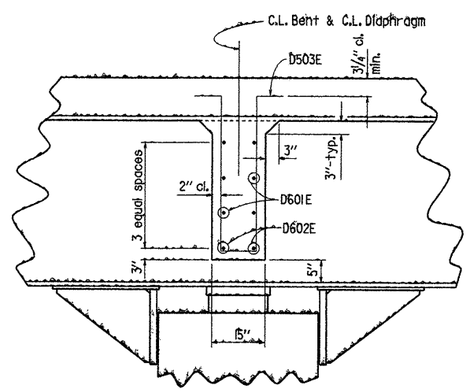

SECTION C-C
Scale: 3/4" = 1'-0"

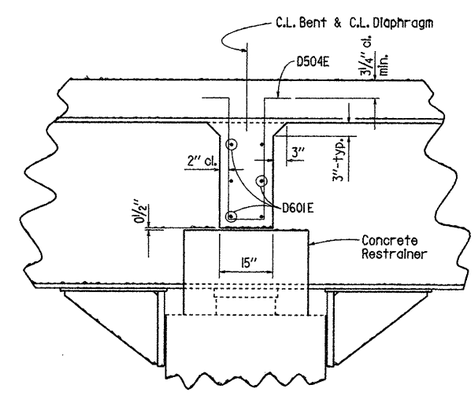

SECTION D-D
Scale: 3/4" = 1'-0"

STATE OF ARKANSAS
REGISTERED PROFESSIONAL ENGINEER
No. 4337
9/7/04
CHARLES P. BRAND
BRIDGE ENGINEER

SHEET 5 OF 8

DETAILS OF 308'-0" CONTINUOUS W-BEAM UNIT
HWY. 135 INTERCHANGE (F)
ROUTE SEC.
ARKANSAS STATE HIGHWAY COMMISSION
LITTLE ROCK, ARK.

DRAWN BY: LM DATE: 3-12-04 FILENAME: bl00547xl_s5.dgn
CHECKED BY: JAC DATE: 9-7-04 SCALE: 1/2" = 1'-0" or as shown
DESIGNED BY: JAC DATE: 1-9-04

BRIDGE NO. 07019 DRAWING NO. 46913

DATE REVISED	DATE FILMED	DATE REVISED	DATE FILMED	FED. ROAD DIST. NO.	STATE	FED. AID PROJ. NO.	SHEET NO.	TOTAL SHEETS
8-23-05				6	ARK.			
				JOB NO.		100547	120	331
				(1) 07019		CONT. UNIT	46914	

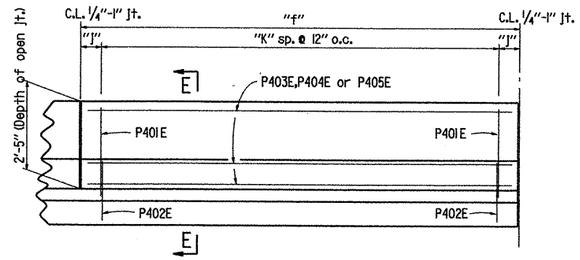

DETAILS OF CLOSED PARAPET RAIL

NTS

TABLE OF VARIABLES

Parapet Joint Spacing	Closed Rail	
"f"	"J"	"K"
8'-0"	6"	7
12'-0"	6"	11
12'-6"	3"	12

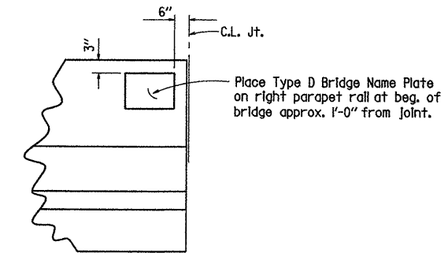

VIEW SHOWING LOCATION OF NAME PLATE

NTS

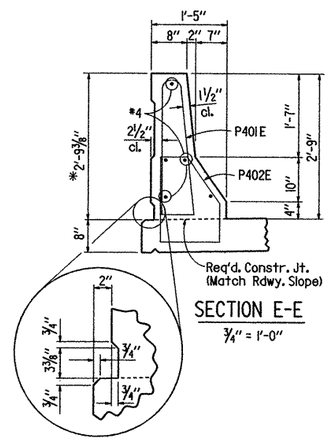

SECTION E-E

3/4" = 1'-0"

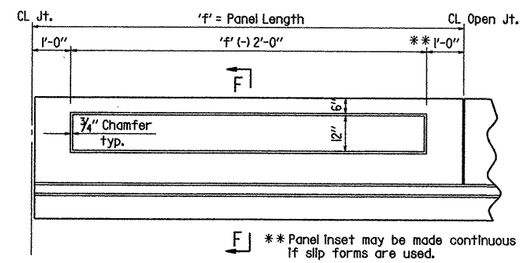

DETAILS OF PARAPET ENHANCEMENT

NTS

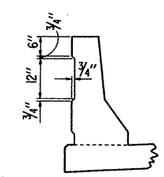

SECTION F-F

NTS

* Measured from top of rail to edge of deck slab.

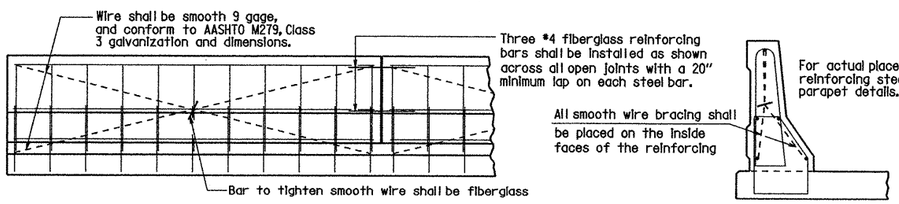

All panels shall be braced as shown to prevent racking. All open joints shall be sawed as soon as practical to a minimum width of 1/4". To control cracking before sawing all joints must be grooved before the concrete is set. Sawing of the joints must be controlled so it will follow the grooved joint.

The extruded parapet shall conform to the horizontal and vertical lines shown on the plans or as directed by the Engineer and shall present a smooth, uniform appearance and texture. Except as otherwise noted, exposed surfaces may be given a light brush finish or a Class 3 Textured Coating Finish, in place of Class 2, Rubbed Finish.

DETAILS OF OPTIONAL SLIPFORMING OF CONCRETE PARAPET RAIL

NTS

STATE OF ARKANSAS
REGISTERED PROFESSIONAL ENGINEER
No. 4337
8/10/05
CHARLES P. BRAND

BRIDGE ENGINEER

SHEET 6 OF 8

DETAILS OF 308'-0" CONTINUOUS W-BEAM UNIT
HWY. 135 INTERCHANGE (F)

ROUTE SEC.

ARKANSAS STATE HIGHWAY COMMISSION

LITTLE ROCK, ARK.

DRAWN BY: LM DATE: 3-12-04
CHECKED BY: JAC DATE: 9-7-04
DESIGNED BY: JAC DATE: 1-9-04

FILENAME: bl00547x_s6.dgn
SCALE: 3/8"=1'-0" or as shown

BRIDGE NO. 07019 DRAWING NO. 46914

DATE REVISED	DATE FILMED	DATE REVISED	DATE FILMED	FED. ROAD DIST. NO.	STATE	FED. AID PROJ. NO.	SHEET NO.	TOTAL SHEETS
5-23-05				6	ARK.			
				JOB NO.		100547	121	331
				07019		CONT. UNIT 46915		

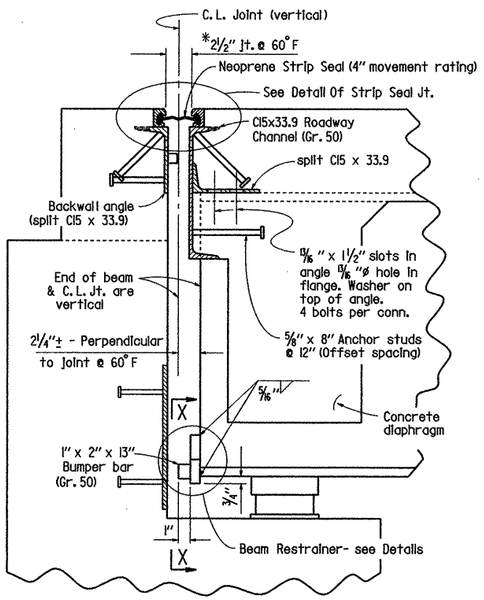

SECTION THRU JOINT AT END BENT

NTS

Note: Section taken normal to C.L. Joint

EXPANSION DEVICE INSTALLATION

The Contractor may elect to install the expansion device using one of the following two alternatives.

1) The concrete span pour adjacent to joint shall be placed before the end bent backwall is placed. After the end bent backwall forms are in place and the beams erected, the blocked expansion device shall be installed and adjusted for grade. All connection bolts shall be fully tightened prior to placing the deck concrete adjacent to the bent. Immediately prior to pouring the backwall concrete, the blocking shall be removed, the opening adjusted for temperature and grades, and the backwall constructed.

2) The backwall shall be poured to the optional construction joint after beams are erected. The blocked expansion device shall be installed and adjusted for grade. All connection bolts shall be fully tightened prior to placing the deck concrete adjacent to the bent. Immediately prior to pouring the remainder of the backwall concrete, the blocking shall be removed and the opening adjusted for temperature.

TABLE A

	"E" Width perpendicular to joint at 24 hour average temperature of:			Movement Rating	"E"
	40°F	60°F	80°F		
Bent 1	2¼"	2"	1¾"	4"	2"
Bent 5	2¼"	2"	1¾"	4"	2"

Note: The temperature used to set the joint opening shall be the approximate average air temperature during the 24 hour period immediately before the bolts are tightened. The Engineer shall establish the temperature. Interpolation of the table may be necessary.

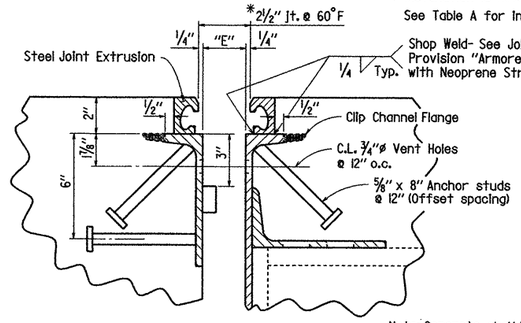

DETAIL OF STRIP SEAL JOINT

3" = 1'-0"

* Installation is limited to 40°F min. and 80°F max.
See Table A for installation temperatures other than 60°F

Note: Concrete shall be hand packed under the joint armor in the backwall and in the span.

EXPANSION NEOPRENE STRIP SEAL: The expansion device shall provide a movement of 4" as shown in Table A. The expansion joint shall be capable of sealing the deck surface and parapet area to prevent moisture and other contaminants from descending through the joint.

Details of proposed slider plate assembly shall be submitted to and approved by the Bridge Engineer prior to the fabrication of any structural steel at the expansion device.

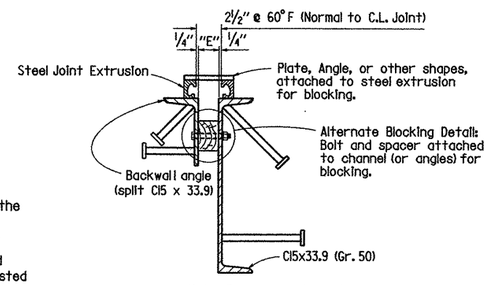

Note: Each expansion joint device shall be blocked in the Shop by the Fabricator to 2", and the blocking details shall be shown on the Shop Drawings. Blocking shall be placed within 2 feet of each end of the device and shall be placed within a maximum spacing of 8 feet.

DETAILS FOR BLOCKING EXPANSION JOINT DEVICE

NTS

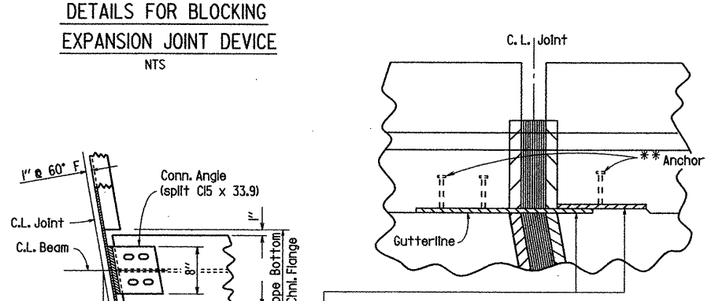

** The method of attachment of the slider plate assembly must be such that it may be removed in order to provide for future replacement of the neoprene seal. Anchors will not be paid for directly, but shall be considered subsidiary to "Structural Steel in Beam Spans (M270, Gr. 50).

Note: Details of Joint turn-up in curb and parapet are general and show basic design controls only. See SP Job 100547, 'Armored Joint with Neoprene Strip Seal.'

Note: Method of installation and fabrication shall be determined by the manufacturer.

Slider plates shall be AASHTO M270, Gr. 36 and shall be paid for as "Structural Steel in Beam Spans (M270, Gr. 50). The surfaces which will not be in contact with concrete shall be cleaned and painted in accordance with subsection 807.75, or as directed by the Engineer. Only one coat is required and shall be applied in the fabricator's shop. Steel extrusion plates and painting will not be paid for directly but will be considered subsidiary to "Structural Steel in Beam Spans (M270, Gr. 50).

SECTION C-C

NTS

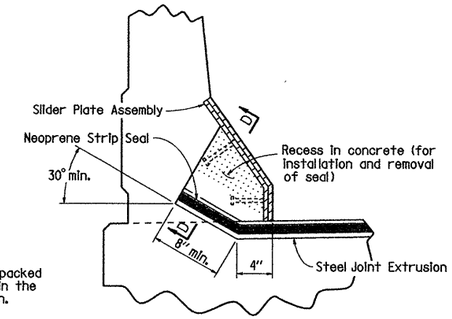

SECTION B-B

1½" = 1'-0"

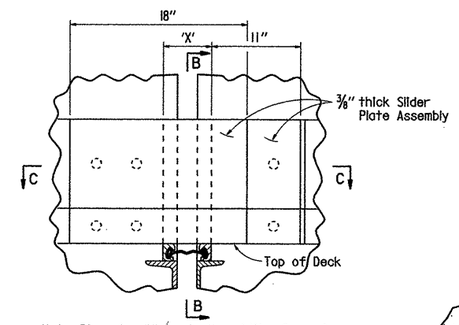

Note: Dimension 'X' equals the width of opening in parapet at curb to allow for removal or repair of joint.

DETAIL OF NEOPRENE STRIP SEAL AT CURB

NTS

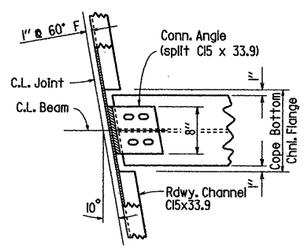

CHANNEL CONNECTION DETAILS

No Scale

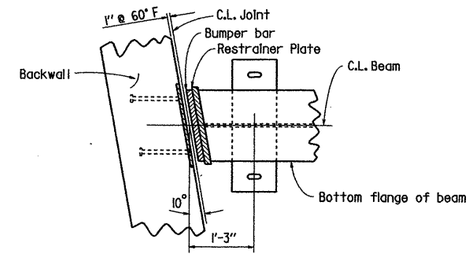

PLAN OF BEARING AT END BENT

No Scale

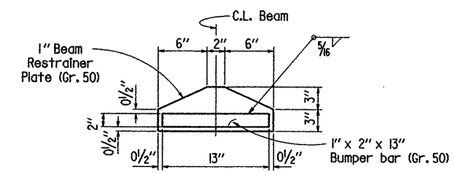

Note: Beam restrainer plate shall be centered on each beam line.

VIEW X - X

Scale: 1½" = 1'-0"

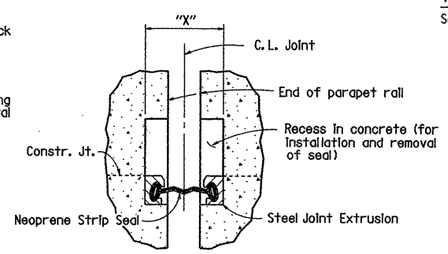

SECTION D-D

NTS

TABLE FOR WELD

Material Thickness of Thicker Part Joined (Inches)	Minimum Size of Fillet Weld (Inches)	Single Pass Weld Must Be Used
To ¾" inclusive	¼"	
Over ¾"	5/16"	

Note: When a fillet weld size, as shown on the plans, is larger than the minimum, the first pass shall be that specified for minimum size of fillet weld.

STATE OF ARKANSAS REGISTERED PROFESSIONAL ENGINEER No. 4637 5/16/05 CHARLES P. BRAND

BRIDGE ENGINEER

SHEET 7 OF 8

DETAILS OF 308'-0" CONTINUOUS W-BEAM UNIT HWY. 135 INTERCHANGE (F)

ROUTE SEC.

ARKANSAS STATE HIGHWAY COMMISSION

LITTLE ROCK, ARK.

DRAWN BY: LM DATE: 3-12-04 FILENAME: b100547xl_s7.dgn
CHECKED BY: JAC DATE: 9-7-04 SCALE: As shown
DESIGNED BY: JAC DATE: 1-9-04

BRIDGE NO. 07019 DRAWING NO. 46915

DATE REVISED	DATE FILMED	DATE REVISED	DATE FILMED	FED. ROAD DIST. NO.	STATE	FED. AID PROJ. NO.	SHEET NO.	TOTAL SHEETS
				6	ARK.			
				JOB NO.		100547	122	331
				(1) 07019		CONT. UNIT	46916	

TABLE OF DEAD LOAD DEFLECTIONS-INCHES

Span	Point of Deflection	Structural Steel		Structural Steel+Slab		Str. Steel +Slab+Rail	
		Interior	Exterior	Interior	Exterior	Interior	Exterior
1	0	0	0	0	0	0	0
	0.1	0.029	0.029	0.180	0.163	0.195	0.178
	0.2	0.053	0.053	0.330	0.299	0.358	0.327
	0.3	0.069	0.069	0.428	0.388	0.464	0.424
	0.4	0.076	0.076	0.464	0.420	0.503	0.460
	0.5	0.072	0.072	0.435	0.394	0.472	0.432
	0.6	0.059	0.059	0.352	0.319	0.382	0.350
	0.7	0.041	0.041	0.233	0.211	0.253	0.232
	0.8	0.020	0.020	0.107	0.097	0.116	0.106
	0.9	0.004	0.004	0.013	0.012	0.013	0.012
2	0	0	0	0	0	0	0
	0.1	0.021	0.021	0.166	0.150	0.183	0.167
	0.2	0.059	0.059	0.446	0.402	0.490	0.447
	0.3	0.097	0.097	0.727	0.656	0.797	0.727
	0.4	0.125	0.125	0.921	0.831	1.008	0.920
	0.5	0.133	0.133	0.974	0.880	1.067	0.973
	0.6	0.120	0.120	0.876	0.791	0.959	0.875
	0.7	0.090	0.090	0.651	0.588	0.714	0.652
	0.8	0.051	0.051	0.366	0.330	0.402	0.367
	0.9	0.016	0.016	0.113	0.102	0.125	0.114
	0	0	0	0	0	0	0

Half-point of Unit.

Note: Camber for Dead Load Deflection plus Vertical curve ± 1/4" tolerance. Deflections shown are along C.L. Beam from a chord from C.L. Bearing to C.L. Bearing. Vertical curve corrections not included. Negative sign (-) indicates point above chord.

symmetrical about half-point of Unit.

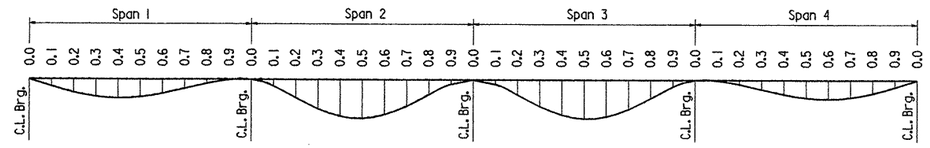

DEAD LOAD DEFLECTION DIAGRAM

No Scale

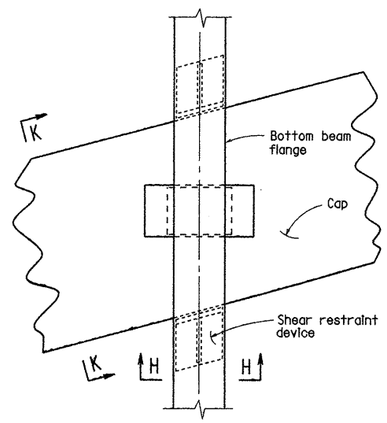

DETAIL J-J

3/4" = 1'-0"

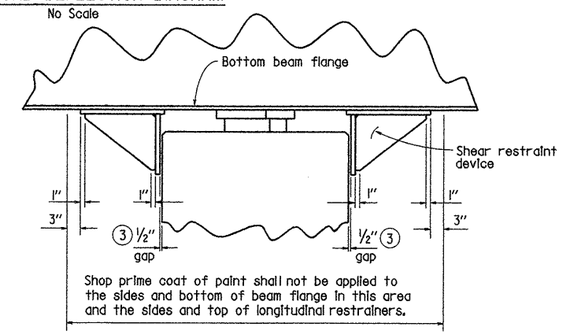

VIEW K - K

NTS

(3) Hold this dimension for all temperatures.

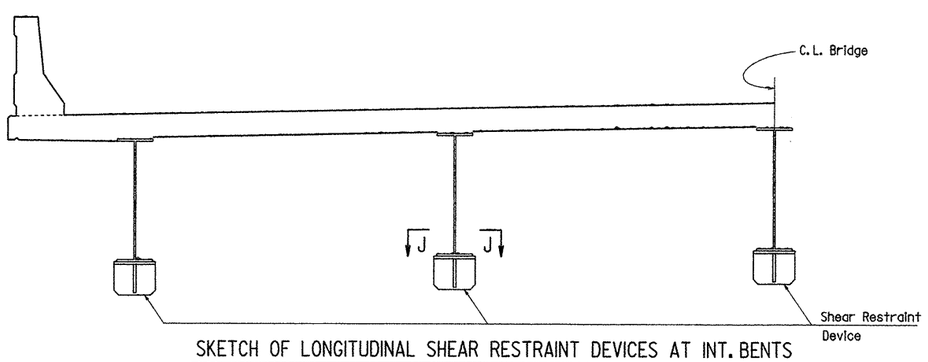

SKETCH OF LONGITUDINAL SHEAR RESTRAINT DEVICES AT INT. BENTS

N.T.S.

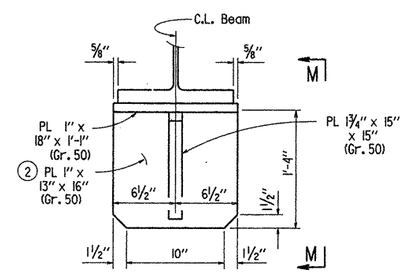

VIEW H-H

NTS

(2) Longitudinal restrainer shall be fabricated to account for grade so as the final position of this plate will be vertical.

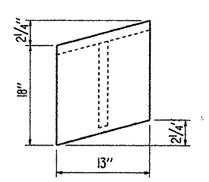

PLAN VIEW OF LONGITUDINAL SHEAR RESTRAINT DEVICE

N.T.S.

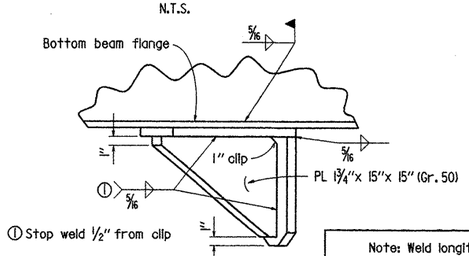

(1) Stop weld 1/2" from clip

VIEW M-M

N.T.S.

Note: Weld longitudinal restrainer after deck has been poured.

LOAD DISTRIBUTION:

	INTERIOR BEAM	EXTERIOR BEAM
DEAD LOAD		
To Beam:	900 plf + 1.3(Wt. of Beam)	808 plf + 1.3(Wt. of Beam)
To Composite Beam:	(4) 348 plf. (closed)	(4) 348 plf. (closed)
(4) Includes 192 plf future wearing surface		
LIVE LOAD		
To composite beam:	1.6364 Wheels + Impact	1.889 Wheels + Impact

STATE OF ARKANSAS
REGISTERED PROFESSIONAL ENGINEER
No. 4337
3/17/04
CHARLES P. BRAND

BRIDGE ENGINEER

GENERAL NOTES

CONSTRUCTION SPECIFICATIONS: Arkansas State Highway and Transportation Department Standard Specifications for Highway Construction (2003 Edition) with applicable supplemental specifications and special provisions.

DESIGN SPECIFICATIONS: AASHTO Standard Specifications for Highway Bridges (2002 Edition).

LIVE LOADING: HS20 METHOD OF DESIGN: Load Factor

MATERIALS AND STRENGTHS:

Class S(AE) Concrete (superstructure)	f'c = 4000 psi
Reinforcing Steel (AASHTO M31 or M53, Gr. 60)	fy = 60,000 psi
Structural Steel (AASHTO M270, Gr. 50)	Fy = 50,000 psi
Structural Steel (AASHTO M270, Gr. 36)	Fy = 36,000 psi

STRUCTURAL STEEL:
All beams and field splice plates shall be AASHTO M270, Gr. 50. All other structural steel shall be AASHTO M270, Gr. 36 unless otherwise noted. All Structural Steel shall be paid for as "Structural Steel in Beam Spans (M270, Gr.50)". All exposed surfaces shall be cleaned in accordance with subsection 807.84.

All structural steel except galvanized steel and steel which is completely encased in concrete shall be painted in accordance with subsection 807.75. The color of paint shall conform to Federal Standard 595A, Color Chip No. 37200, Aluminum.

Structural steel shapes of equal or greater strength may be substituted for shapes shown if prior approval is obtained from the Bridge Engineer. Payment will be made on the basis of shapes shown.

Beams including web and flange splice plates are considered main load carrying members and shall meet the Longitudinal Charpy V-Notch Test specified in subsection 807.05.

Flange splice plates for main members shall be cut and fabricated so that the primary direction of rolling is parallel to the direction of the main tensile and/or compressive stresses.

Drawings show general features of design only. Shop drawings shall be made in accordance with specifications, submitted, and approval secured before fabrication is begun.

All beams shall be blocked in their true position in the shop in groups of a minimum of three sections. Beams shall be blocked with webs horizontal and as specified in subsection 807.54(b)(2). The camber, length of sections, distance between bearings and opening of joints shall be measured with the beams in their true position and this information shall become part of the permanent records of this job. The component parts shall be match marked in this assembly and those marks shall be be shown on the erection diagram. All beam dimensions are based on a temperature of 60 degrees F. A tolerance of 1/4"(plus or minus) allowed for camber.

Field connections shall be bolted with high-strength bolts. Bolts shall be 3/4"ø, except as noted, and open holes shall be 15/16"ø unless noted otherwise. Holes for 3/4"ø bolts may be 13/16"ø if a washer is supplied for use under both the nut and head of the bolt. Bolt spacing shall be 2 1/2" for 3/4"ø bolts. For field splices, bolts shall be 7/8"ø bolts. Open holes shall be 15/16"ø. Bolt spacing shall be 3" for 7/8"ø bolts. Bolts shall be placed with heads on the outside face of the exterior girder web and on the bottom of the beam flanges.

All welding that is to be done during fabrication of structural steel, including temporary welds, shall be detailed on the shop drawings and submitted for approval. If the Contractor or erector should want to make additional welds, whether temporary or permanent, he shall submit detailed drawings with a formal request to the Bridge Engineer for approval. All welding shall conform to subsection 807.26.

Diaphragms shall be installed as beams are erected. All bolts in diaphragms and field splices shall be installed and tightened in accordance with subsection 807.71 prior to pouring the deck.

REINFORCING STEEL:
The reinforcing steel shall be accurately located in the forms and firmly held in place by steel wire supports, sufficient in size and number, to prevent displacement during the course of construction. The wire supports will not be paid for directly but will be considered subsidiary to the item "Epoxy-Coated Reinforcing Steel(Grade 60)".

CONCRETE:
All concrete shall be Class S(AE) with a minimum 28 day compressive strength f'c = 4000 psi. Concrete shall be poured in the dry and all exposed corners to be chamfered 3/4" unless otherwise noted.

Concrete in bridge superstructure shall be placed, consolidated, and screeded off for the entire pour before any concrete has taken its initial set. This may require the use of a retarding agent. The concrete diaphragms shall be poured monolithically with the slab.

The concrete deck shall be given a tine finish in accordance with subsection 802.19 for Class 5, Tined Bridge Roadway Surface Finish. Movement of the finishing machine across new concrete shall be on planks placed on the surface and shall be prohibited for 72 hours after finishing the pour. Sufficient concrete must be placed ahead of the strike-off to fully load the beam. If a longitudinal strike-off is used, a vertical camber adjustment must be made in the strike-off to account for the future dead load deflection due to the parapet railing.

A minimum of 72 hours shall elapse between completion of the bridge deck slab and the pouring of the parapet railing. Any railing pours made before the entire slab has been placed and cured must be approved by the Bridge Engineer.

SHEET 8 OF 8

DETAILS OF 308'-0" CONTINUOUS W-BEAM UNIT HWY. 135 INTERCHANGE (F)

ROUTE SEC.

ARKANSAS STATE HIGHWAY COMMISSION

LITTLE ROCK, ARK.

DRAWN BY:	LM	DATE:	3-12-04	FILENAME:	bl00547xl_s8.dgn
CHECKED BY:	JAC	DATE:	9-7-04	SCALE:	As shown
DESIGNED BY:	JAC	DATE:	1-9-04		

BRIDGE NO. 07019 DRAWING NO. 46916

DATE REVISED	DATE FILMED	DATE REVISED	DATE FILMED	FED. ROAD DIST. NO.	STATE	FED. AID PROJ. NO.	SHEET NO.	TOTAL SHEETS
				6	ARK.			
				JOB NO.		100547	123	331

(1) 05608, 07019 TYPE SPECIAL APPR. SLAB 46917

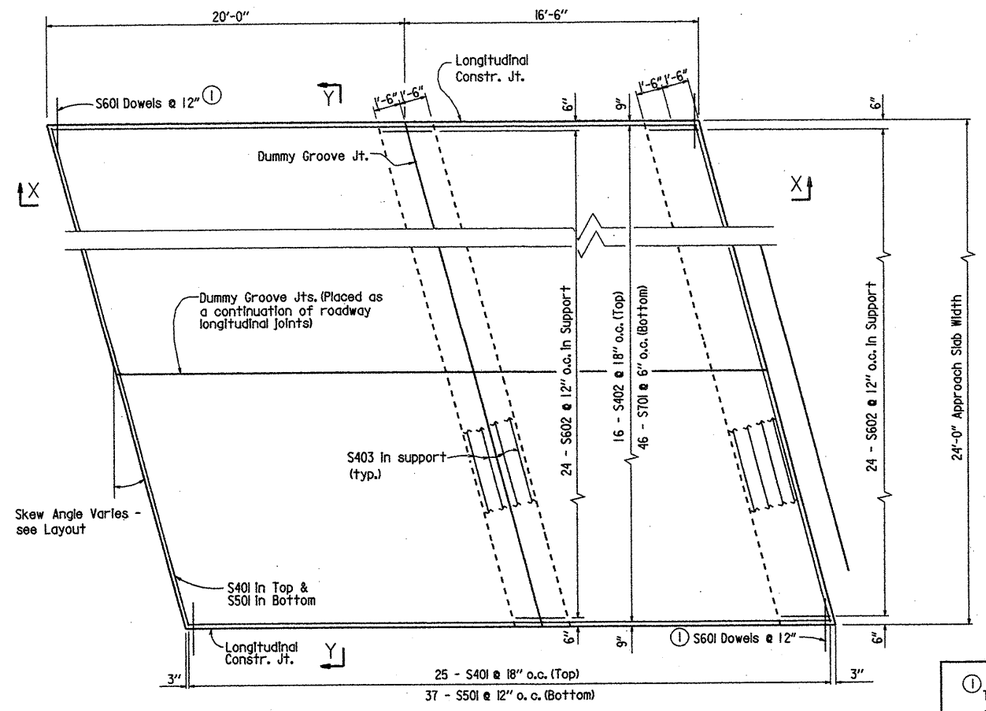

PLAN - APPROACH SLAB

N.T.S.

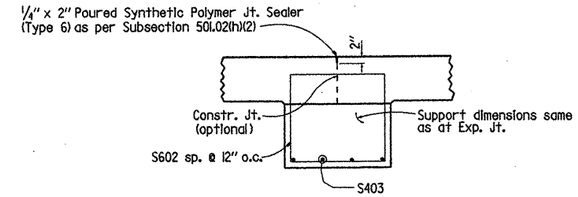

DETAILS OF DUMMY GROOVE JOINT

1/2" = 1'-0"

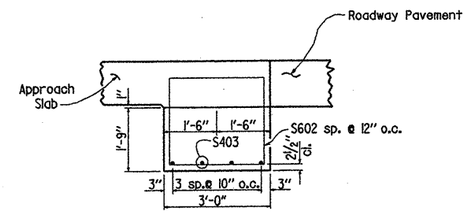

DETAILS OF SUPPORT AT EXPANSION JOINT

1/2" = 1'-0"

BAR LIST PER SLAB (BR. NO. 07019)

(For Skew Angle = 10°)

		Mark	No. Req'd.	Length	Bending Diagrams
Type 1 Special Approach Slab	24'-0" Slab Width				Dimensions are out-to-out of bars
		S401	25	24'-0"	
		S402	16	36'-1"	
		S403	8	24'-0"	
		S501	37	24'-0"	
		S601	72	3'-0"	
		S602	48	11'-5"	
		S701	46	36'-1"	

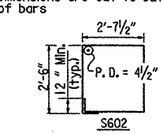

(1) The dowel size and spacing shown herein supercedes the details shown on Std. Dwg. No. 2091 "DETAILS OF STANDARD TYPE 'PT' APPROACH GUTTERS".

(2) The 1/2" Preformed Joint AASHTO Type I shall be eliminated between concrete faces where dowel bars are used to tie approach slabs and gutters to the bent components at Bridge No. 07019. See End Bent details.

BAR LIST PER SLAB (BR. NO. 05608)

(For Skew Angle = 20°)

		Mark	No. Req'd.	Length	Bending Diagrams
Type 2 Special Approach Slab	24'-0" Slab Width				Dimensions are out-to-out of bars
		S401	25	25'-2"	
		S402	16	36'-1"	
		S403	8	25'-2"	
		S501	37	25'-2"	
		S601	72	3'-0"	
		S602	48	11'-8"	
		S701	46	36'-1"	

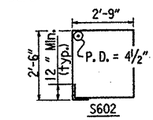

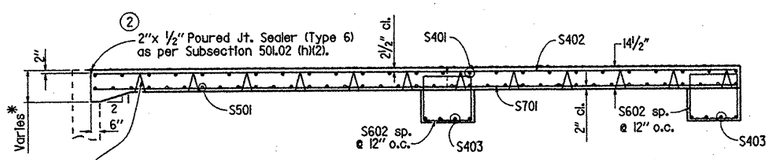

*Slab depth varies - see Span & Bent Details for Br. No. 07019. See "Detail X" on Std. Dwg. No. 2091 for Br. No. 05608.

SECTION X-X

N.T.S.

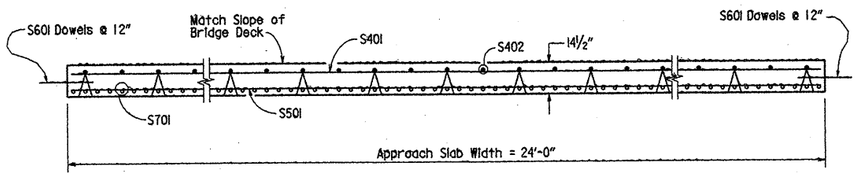

SECTION Y-Y

N.T.S.

TABLE OF QUANTITIES FOR ONE TYPE SPECIAL APPROACH SLAB

	Slab Width	Reinforcing Steel (Lbs.)	Concrete (Cu. Yds.)
Type 1	24'-0"	6380	49.05
Type 2	24'-0"	6470	49.55

GENERAL NOTES

Concrete shall be Class S (AE) (f'c = 4,000 psi).

Reinforcement Steel shall conform to AASHTO M31 or M53, Grade 60 (fy = 60,000 psi).

Surface finish for Approach Slabs shall match that used on the bridge deck.

Approach Slabs will be measured and paid for in accordance with Section 504.

STATE OF ARKANSAS
REGISTERED PROFESSIONAL ENGINEER
No. 4337
9/8/04
CHARLES P. BRAND

BRIDGE ENGINEER

DETAILS OF TYPE SPECIAL APPROACH SLABS

ROUTE SEC.

ARKANSAS STATE HIGHWAY COMMISSION

LITTLE ROCK, ARK.

DRAWN BY: JAC DATE: 7/28/04 FILENAME: bl00547_asl.dgn
CHECKED BY: DATE:
DESIGNED BY: STD DATE: SCALE: As Noted

BRIDGE NOS. 05608 & 07019 DRAWING NO. 46917

DATE REVISED	DATE FILMED	DATE REVISED	DATE FILMED	FED. ROAD DIST. NO.	STATE	FED. AID PROJ. NO.	SHEET NO.	TOTAL SHEETS
04-10-2003				6	ARK.			
				JOB NO.			124	
				①	EMBANKMENT & BACKFILL		1888A	

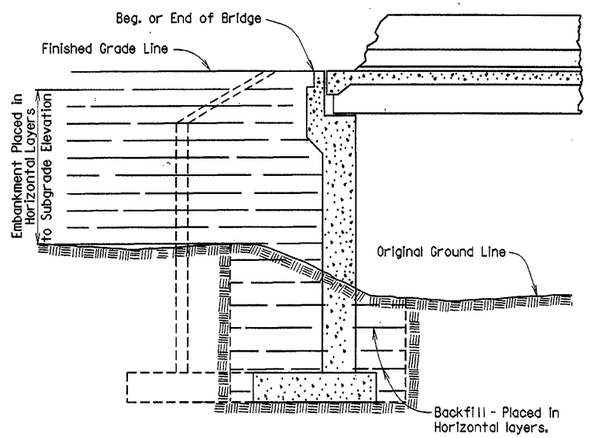

EMBANKMENT CONSTRUCTION AND FOOTING BACKFILL AT VERTICAL WALL ABUTMENTS

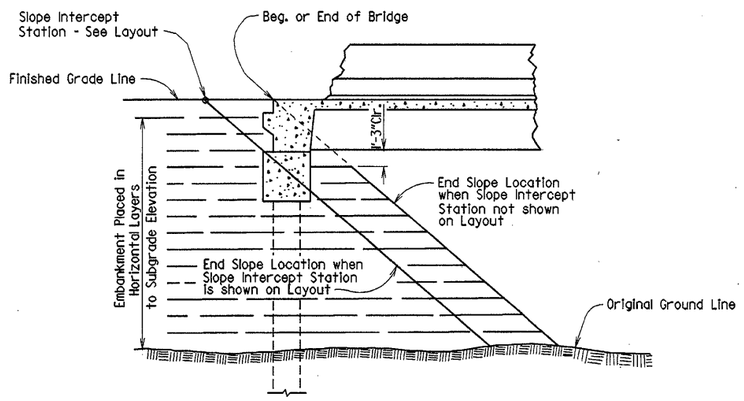

EMBANKMENT CONSTRUCTION AT SPILL-THROUGH PILE END BENTS

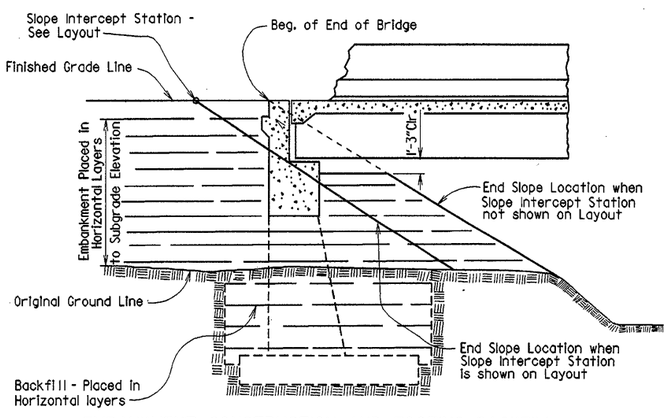

EMBANKMENT CONSTRUCTION AND FOOTING BACKFILL AT SPILL-THROUGH END BENTS

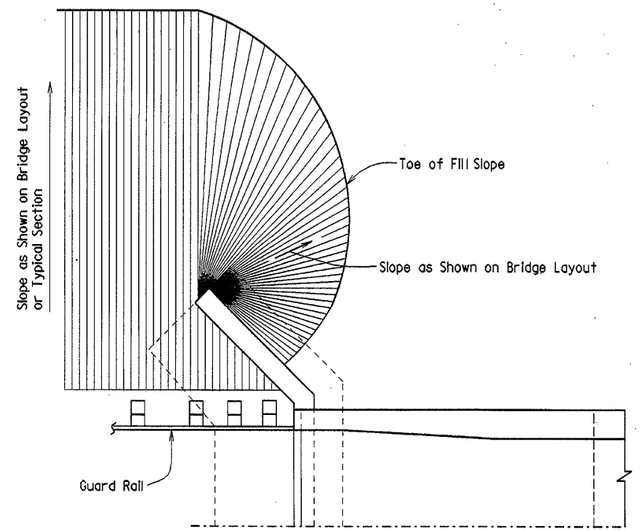

VERTICAL WALL ABUTMENTS

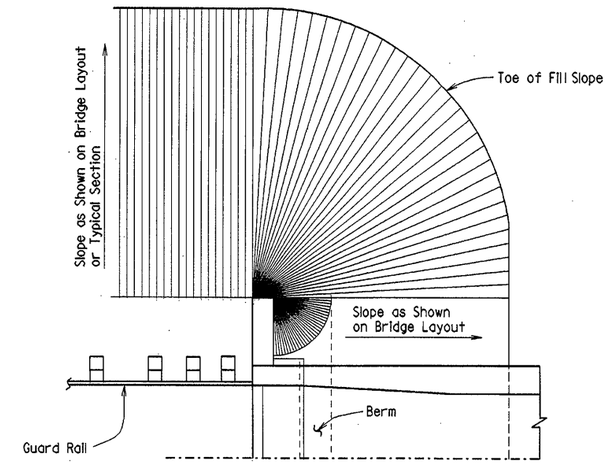

SPILL-THROUGH END BENTS WITH STUB WING

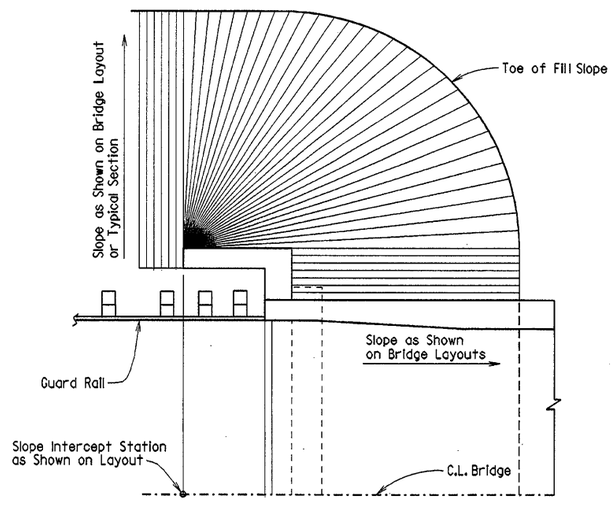

SPILL-THROUGH END BENTS WITH TURNBACK WING

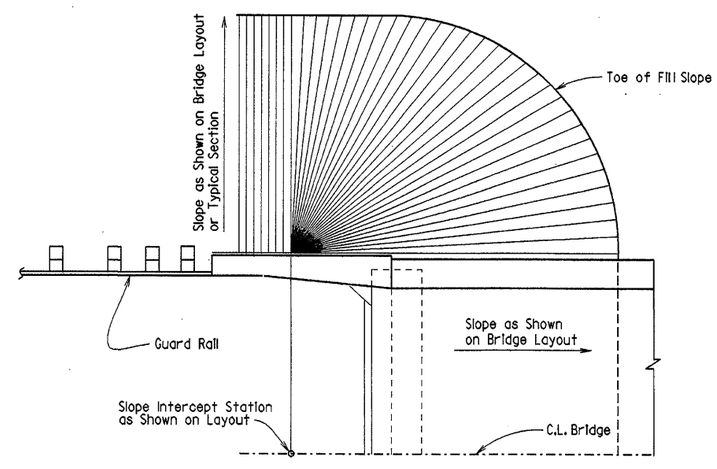

SPILL-THROUGH END BENTS WITH TRANSITION WING

METHOD OF DETERMINING FILL SLOPE LOCATION AT BRIDGE ENDS

GENERAL NOTES

The Bridge End Embankment shall be defined as a section of embankment, not less than 20 feet long adjacent to the bridge end, together with the side slopes and slopes under the bridge end including around the end of wingwalls. Embankment adjacent to structures shall be constructed in 4 inch horizontal layers (loose measure) and compacted by the use of mechanical equipment to the satisfaction of the Engineer. Refer to subsections 210.09, 210.10 and 801.08 of the Specifications for construction requirements.

⚠ Revised and redrawn MJT 04-10-2003
Chk'd. By: CJF 04-10-2003

STATE OF ARKANSAS
REGISTERED PROFESSIONAL ENGINEER
No. 4337
CHARLES P. BRAND

BRIDGE ENGINEER

EMBANKMENT CONSTRUCTION AND BACKFILL AT BRIDGE ENDS

ROUTE SEC.

ARKANSAS STATE HIGHWAY COMMISSION

LITTLE ROCK, ARK.

DRAWN BY: MJT DATE: 04-10-2003 FILENAME: BI888A.STD
CHECKED BY: CJF DATE: 04-10-2003 SCALE: NO SCALE
DESIGNED BY: STD. DATE: —

BRIDGE NO. DRAWING NO. 1888A

BI888A.STD

DATE REVISED	DATE FILMED	DATE REVISED	DATE FILMED	FED. ROAD DIST. NO.	STATE	FED. AID PROJ. NO.	SHEET NO.	TOTAL SHEETS
04-10-2003				6	ARK.			
				JOB NO.			125	
				1		RIP. & EXCAV.	1891F	

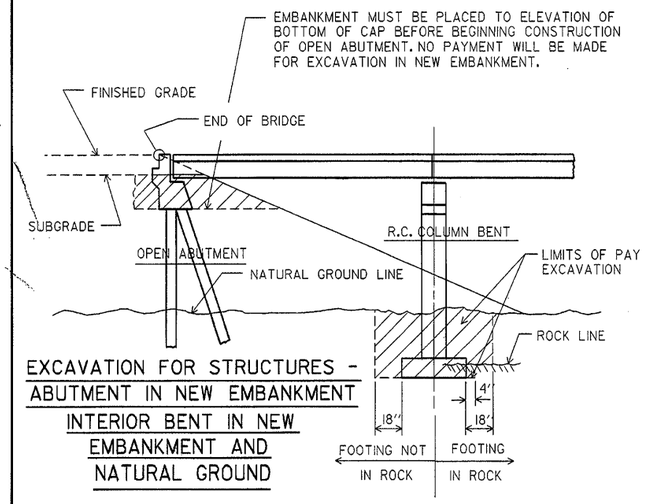

EXCAVATION FOR STRUCTURES - ABUTMENT IN NEW EMBANKMENT INTERIOR BENT IN NEW EMBANKMENT AND NATURAL GROUND

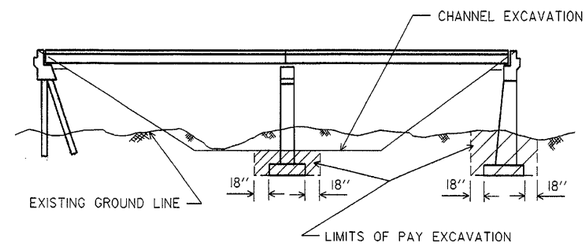

EXCAVATION FOR STRUCTURES - BRIDGE LOCATION WITH DESIGNATED CHANNEL CHANGE

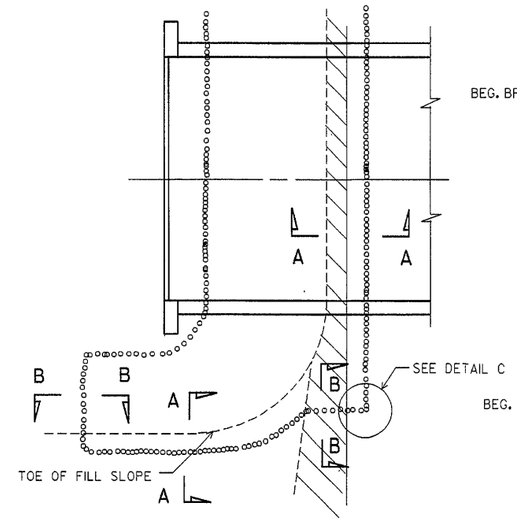

PLAN OF DUMPED RIPRAP

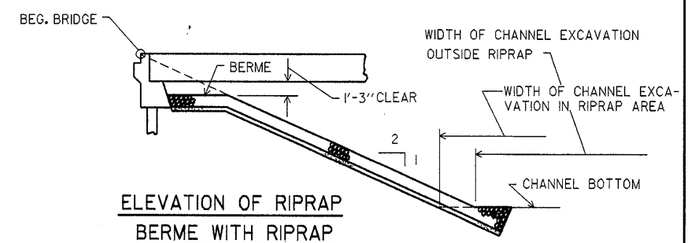

ELEVATION OF RIPRAP BERME WITH RIPRAP

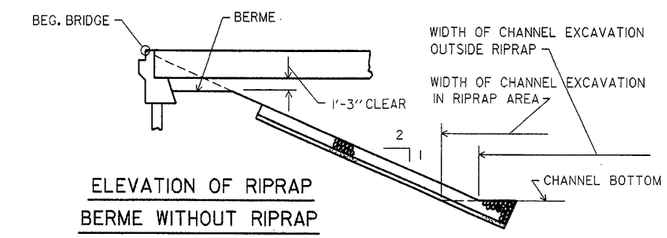

ELEVATION OF RIPRAP BERME WITHOUT RIPRAP

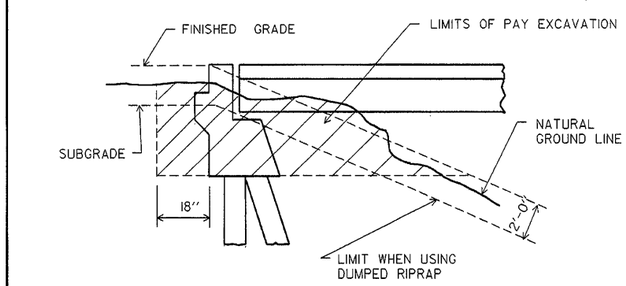

EXCAVATION FOR STRUCTURES - ABUTMENT IN NATURAL GROUND

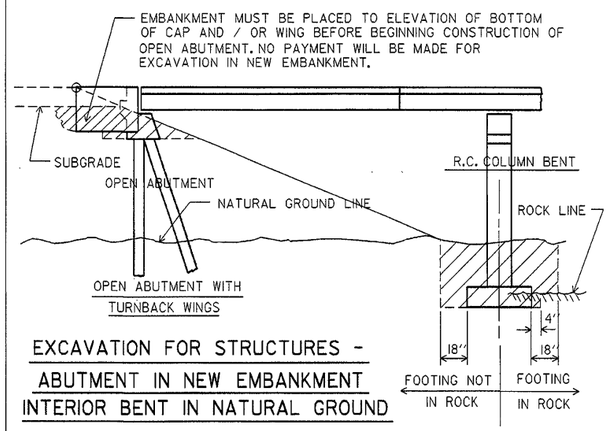

EXCAVATION FOR STRUCTURES - ABUTMENT IN NEW EMBANKMENT INTERIOR BENT IN NATURAL GROUND

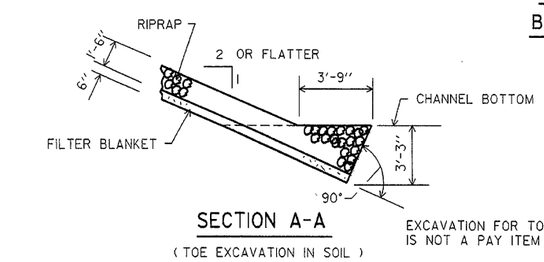

SECTION A-A

(TOE EXCAVATION IN SOIL)

EXCAVATION FOR TOES IS NOT A PAY ITEM

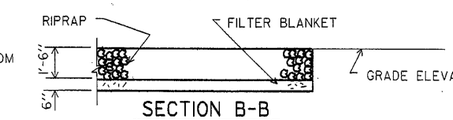

SECTION B-B

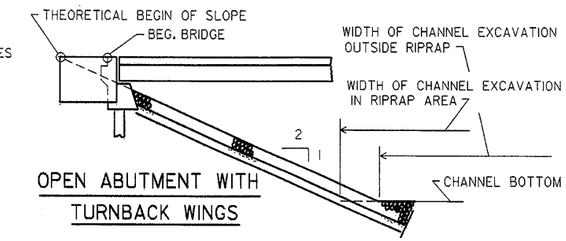

OPEN ABUTMENT WITH TURNBACK WINGS

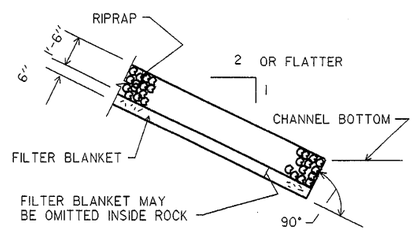

SECTION A-A

(TOE EXCAVATION IN ROCK)

NOTE : USE THIS TYPE OF TOE WHEN ROCK IS ENCOUNTERED WHICH IS IN A STABLE CONDITION.

NOTE : IN LIEU OF AN AGGREGATE FILTER BLANKET, A SYNTHETIC FIBER GEOTEXTILE FABRIC COMPLYING WITH THE REQUIREMENTS OF SUBSECTION 816.02(e) MAY BE USED.

NOTE : DETAILS FOR COMPUTING EXCAVATION FOR STRUCTURES ARE INCLUDED FOR INFORMATION AS TO HOW PLAN QUANTITIES WERE CALCULATED AND FOR USE WHEN ADJUSTING QUANTITIES WHEN CHANGING FOOTING ELEVATION.

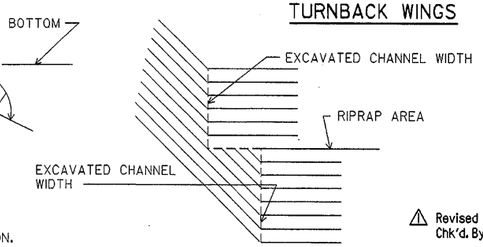

DETAIL C

STATE OF ARKANSAS
REGISTERED PROFESSIONAL ENGINEER
No. 4637
CHARLES P. BRAND

BRIDGE ENGINEER

⚠ Revised and redrawn MJT 04-10-2003
Chk'd. By: CJF 04-10-2003

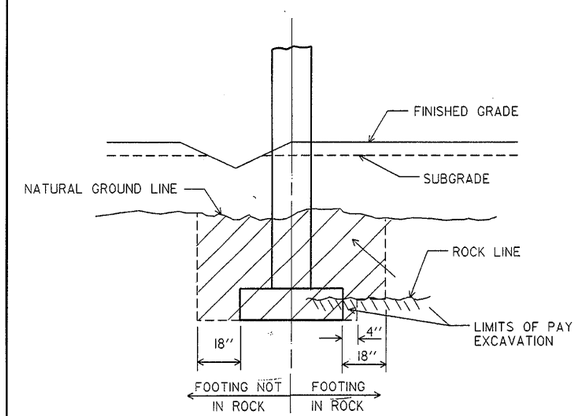

EXCAVATION FOR STRUCTURES - BENT IN ROADWAY FILL SECTION AND NATURAL GROUND

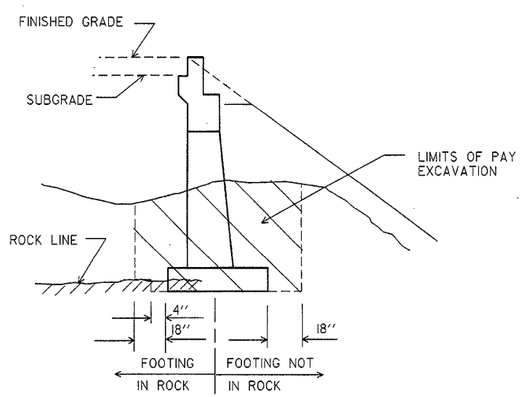

EXCAVATION FOR STRUCTURES - ABUTMENT IN NATURAL GROUND AND NEW EMBANKMENT

DETAILS FOR DUMPED RIPRAP AND FILTER BLANKET AND DETAILS FOR COMPUTING EXCAVATION FOR STRUCTURES

ROUTE SEC.

ARKANSAS STATE HIGHWAY COMMISSION

LITTLE ROCK, ARK.

DRAWN BY:	MJT	DATE:	04-10-2003	FILENAME:	BI891F.STD
CHECKED BY:	CJF	DATE:	04-10-2003	SCALE:	NO SCALE
DESIGNED BY:	STD.	DATE:	—		

BRIDGE NO. DRAWING NO. 1891F