376

80' Stl. Hwy. Trs. 22' Rdwy. Dr. 93

E.F.A. Aid Proj. No.		
285-A	38	44

FED. ROAD No.	STATE	FED. AID PROJECT	FISCAL YEAR	SHEET No	TOTAL SHEETS
6	ARK.				
JOB No.	10532				

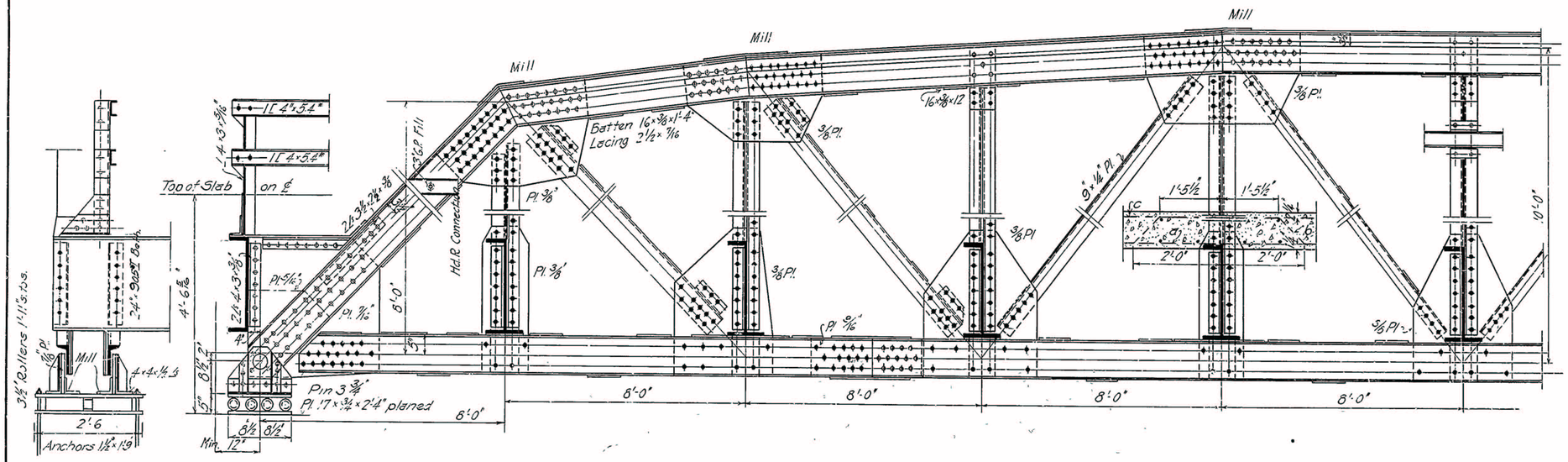

EXPANSION SHOE

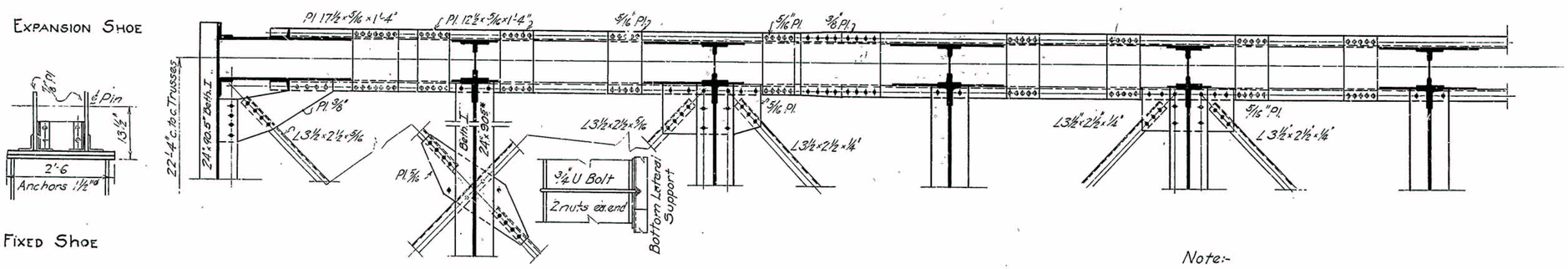

FIXED SHOE

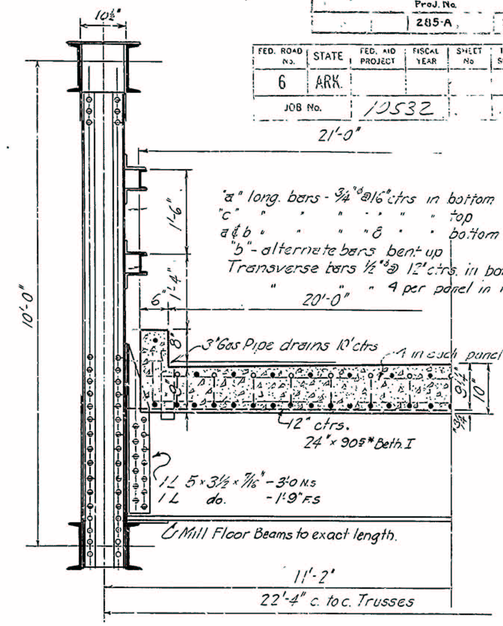

PARTIAL SECTION

SPECIFICATIONS

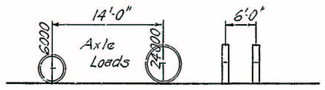

LIVE LOAD :- Uniform - 100 lbs per sq. ft. of Roadway
Concentrated - 2 - 15 Ton Trucks as shown

Impact = 100/(L+300)

Unit Stresses :- See Ark. Highway Dept. Specif. 5/30/25
Rivets :- 3/4" diameter
Open Holes :- Rivet holes in main members punch 1/16" smaller than rivet. During shop assembly ream to 1/16" larger than rivet specified
All field connections riveted. Rivet holes in tension members so spaced that only one hole is deducted from each angle at point of maximum stress. Deduct two holes in each channel
Shop Paint :- One coat red lead & raw linseed oil.
Field Paint :- Two coats of different colors as approved
Batten Plates :- Spaced not over 3'-0" centers on tension members
Concrete : Floor slab Class "S" Extra 1" was added for wear

Note:-

This drawing is general. Shop drawings must be submitted and approved before fabrication is begun.

Floor Beams
D.L.M. - 68800
L.L.M. - 163000
I.M. - 48700
Total 280500

$S = \frac{280500 \times 12}{16000} = 210.3$

24" Beth. I × 90# = 214.6

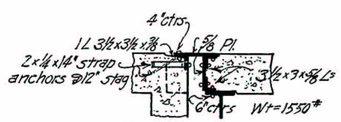

Expansion Device
Conc. Spans Adj.

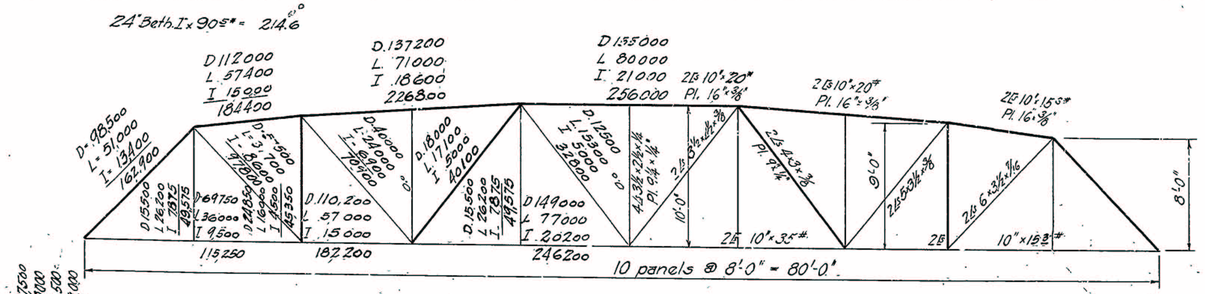

QUANTITIES

Struct. Steel	70,603#	Shop Wt.
Rein. Steel	7905#	
Conc. "S" (81'-6")	53½ cu. yds.	

N. B. Garner
Bridge Engineer

Revised F.A.P. No. 5-18-32 Stl. Sta. No's.

STANDARD PLAN

80'-0" STEEL HIGHWAY TRUSS

20'-0" Roadway Concrete Floor

ARKANSAS HIGHWAY DEPARTMENT
LITTLE ROCK ARK.

Designed By Date
Traced By Date
Checked By Date

This drawing included in Job No. 10532 for general information only.

Drawing No. 93