DATE REVISED	DATE FILMED	DATE REVISED	DATE FILMED	FED. ROAD DIST. NO.	STATE	FED. AID PROJ. NO.	SHEET NO.	TOTAL SHEETS
				6	ARK.			
				JOB NO.		20020	70	124
				(1) 2071W		LAYOUT	29206	

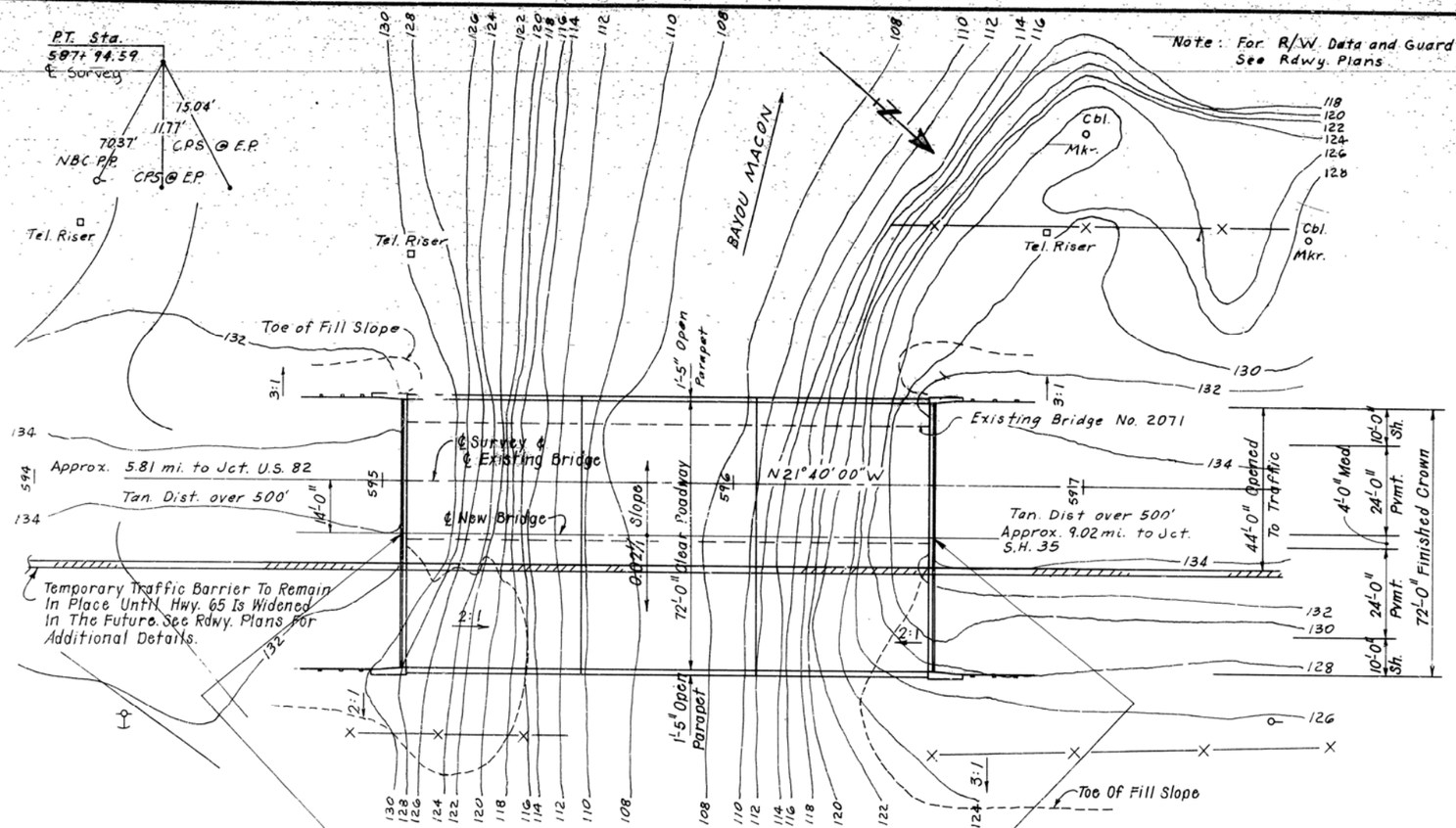

PLAN

Note: For Details Of Construction Staging, See Dwg. No. 29184.

Use Type B1 Approach Gutters at both end of Bridge. See Drawing Nos. 2016B & 2017.

GENERAL NOTES

BENCH MARK BRASS CAP SET IN BRIDGE ABUTMENT 15 FT. LT. OF CENTERLINE SURVEY STA. 596+57.34, ELEV. 134.82.

CONSTRUCTION SPECIFICATIONS ARKANSAS STATE HIGHWAY COMMISSION STANDARD SPECIFICATIONS FOR HIGHWAY CONSTRUCTION, EDITION OF 1978 AND APPLICABLE SPECIAL PROVISIONS.

DESIGN SPECIFICATIONS AASHTO STANDARD SPECIFICATIONS FOR HIGHWAY BRIDGES, 1983 WITH CURRENT INTERIM SPECIFICATIONS.

LIVE LOADING HS20 **METHOD OF DESIGN** LOAD FACTOR

MATERIALS AND STRENGTHS

CLASS S(AE) CONCRETE (SUPERSTRUCTURE)	f'c = 3500 PSI
CLASS S CONCRETE (SUBSTRUCTURE)	f'c = 3500 PSI
REINFORCING STEEL (A615 OR A617, GR. 60)	fy = 60,000 PSI
STRUCTURAL STEEL (A572-GR.50), NEW	fy = 50,000 PSI
STRUCTURAL STEEL (A36), EXISTING & NEW	fy = 36,000 PSI
STRUCTURAL STEEL (A7), EXISTING	fy = 33,000 PSI

CONCRETE PILING PILING FOR BENTS SHALL BE 16" OCT. PRECAST CONCRETE AND SHALL BE DRIVEN WITH AN APPROVED AIR, STEAM, OR DIESEL HAMMER TO A MINIMUM BEARING CAPACITY OF 44 TONS PER PILE. ALL PILING SHALL HAVE A MINIMUM PENETRATION OF 20' BELOW THE GROUND LINE. LENGTHS OF PILING SHOWN ARE ASSUMED FOR ESTIMATING QUANTITIES ONLY. ACTUAL LENGTHS TO BE DETERMINED IN THE FIELD. DRIVE ONE 35' TEST PILE IN BENT 1, DRIVE ONE 50' TEST PILE IN BENT 3.

BRIDGE DECK: THE CONCRETE BRIDGE DECK SHALL BE GIVEN A TINE FINISH AS SPECIFIED FOR FINAL FINISHING IN SUBSECTION 802.23 FOR CLASS 6 ROADWAY SURFACE FINISH.

DETAIL DRAWINGS

	DRAWING NO.
BENTS	29189,29202,29203,29207,29208
SPANS	29190-29194, 29205
PRECAST CONCRETE PILING	2383
APPROACH GUTTERS TYPE B1	2016B & 2017

PROPOSED STAGE CONSTRUCTION WORK:

STAGE I CONSISTS OF: WIDENING EXISTING BENTS AND CONSTRUCTING A NEW DECK WITH NEW BEAMS WHILE MAINTAINING TRAFFIC ON EXISTING BRIDGE.

STAGE II CONSISTS OF: PLACING TRAFFIC ON COMPLETED STAGE I CONSTRUCTION, REMOVING EXISTING CONCRETE DECK AND END BENT BACKWALLS; WIDENING EXISTING BENTS; RETAINING, REPAIRING, AND PAINTING EXISTING STRUCTURAL STEEL; PLACING SHEAR CONNECTOR STUDS ON EXISTING BEAMS; PLACING NEW EXTERIOR BEAM, POURING NEW DECK; REBUILDING END BENT BACKWALLS, & OTHER MISC. WORK.

THE CONTRACTOR SHALL BE RESPONSIBLE FOR MAKING CHECK MEASUREMENTS OF EXISTING BRIDGE AND MAKING NECESSARY ADJUSTMENT TO THE NEW WORK. HALF-SIZE SHEETS AND ORIGINAL PILING RECORDS OF THE EXISTING BRIDGE MAY BE OBTAINED FROM THE ARKANSAS STATE HIGHWAY AND TRANSPORTATION DEPARTMENT UPON REQUEST.

* Based on Working Point at ℄ New Bridge. See "Rounding Detail" on Drwg. No. 29190.

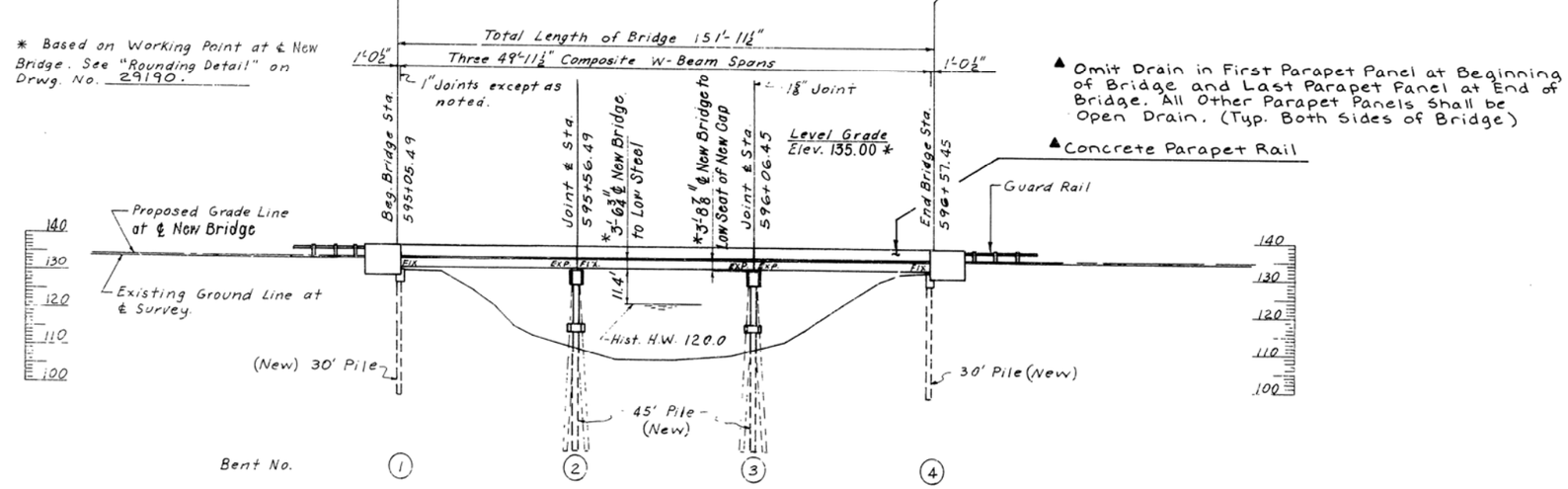

ELEVATION

▲ Omit Drain in First Parapet Panel at Beginning of Bridge and Last Parapet Panel at End of Bridge. All Other Parapet Panels Shall be Open Drain. (Typ. Both Sides of Bridge)

▲ Concrete Parapet Rail

594+00 595+00 596+00 597+00 598+00

LAYOUT OF BRIDGE OVER
BAYOU MACON
LAKE VILLAGE-HWY. 35
(BR. & APPRS.)
CHICOT COUNTY

ROUTE 65 SEC. 20

ARKANSAS STATE HIGHWAY COMMISSION
LITTLE ROCK, ARK.

DRAWN BY: N. Alley DATE: 5-17-87
CHECKED BY: GEC DATE: 3-31-87
DESIGNED BY: GEC DATE: 3-87
SCALE: 1" = 20'-0"

Vernal Pinkerton
BRIDGE ENGINEER

BRIDGE NO. 2071W DRAWING NO. 29206

DATE REVISED	DATE FILMED	DATE REVISED	DATE FILMED	FED. ROAD DIST. NO.	STATE	FED. AID PROJ. NO.	SHEET NO.	TOTAL SHEETS
				6	ARK.			
				JOB NO.		20020	73	124
				(1) 2072W		LAYOUT		29209

For R/W Data-See Rdwy. Plans.

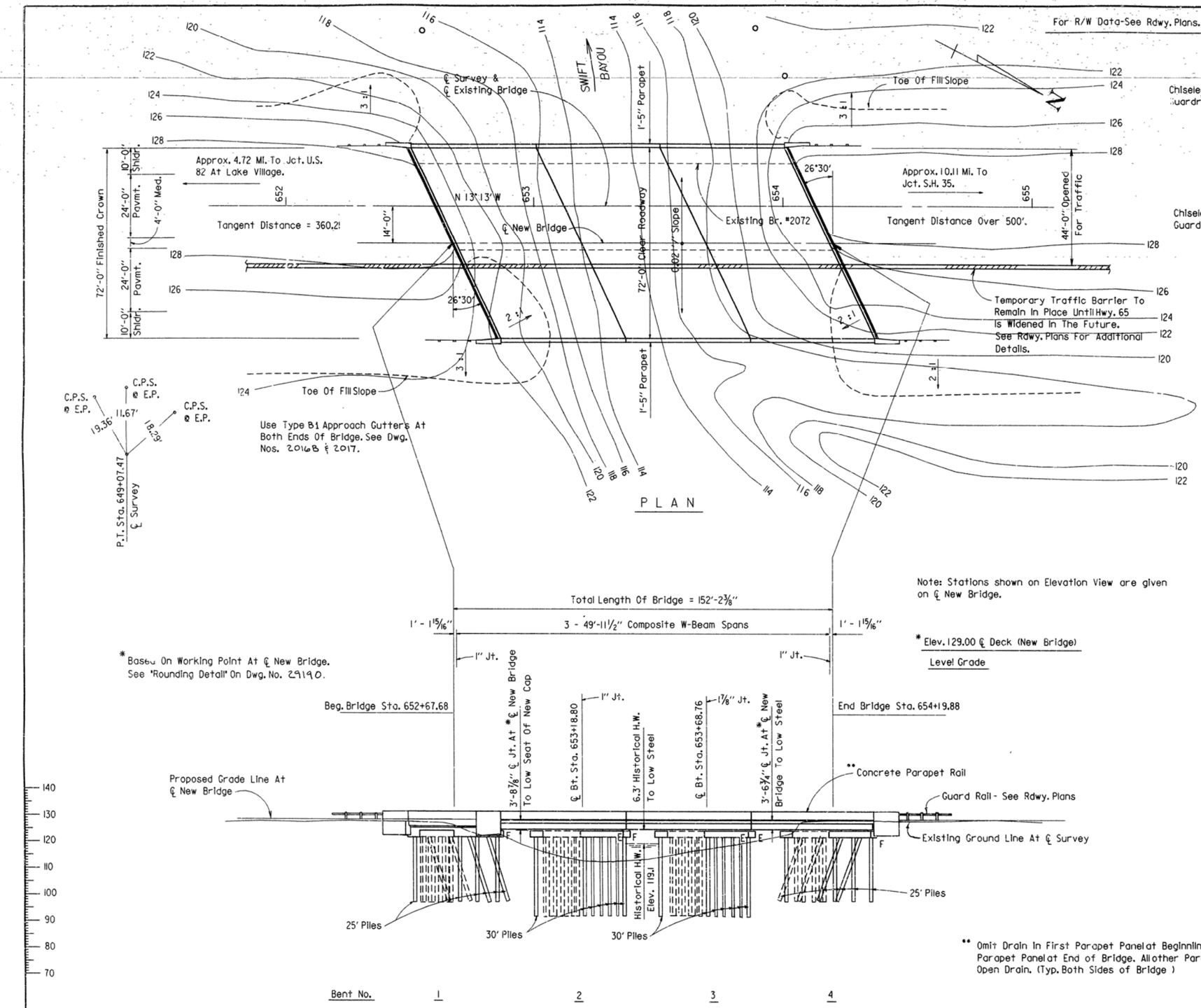

PLAN

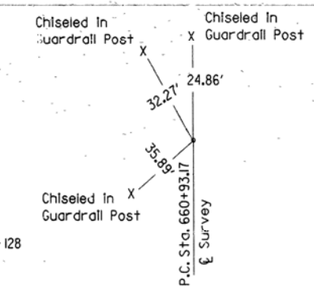

Note: For Details Of Construction Staging, See Dwg. No. 29184.

Total Length Of Bridge = 152'-2⅜"

3 - 49'-11½" Composite W-Beam Spans

1'-1 15/16" | 1'-1 15/16"

1" Jt. | 1" Jt.

* Elev. 129.00 ℄ Deck (New Bridge)

Level Grade

* Based On Working Point At ℄ New Bridge. See 'Rounding Detail' On Dwg. No. 29190.

Beg. Bridge Sta. 652+67.68

End Bridge Sta. 654+19.88

Note: Stations shown on Elevation View are given on ℄ New Bridge.

ELEVATION

** Omit Drain In First Parapet Panel at Beginning of Bridge and Last Parapet Panel at End of Bridge. All other Parapet Panels shall be Open Drain. (Typ. Both Sides of Bridge)

652+00 | 653+00 | 654+00 | 655+00

GENERAL NOTES

BENCH MARK BRASS CAP SET IN BRIDGE ABUTMENT 15 FT. LT. OF CENTERLINE SURVEY STA. 652+54.00, ELEV. 128.76.

CONSTRUCTION SPECIFICATIONS ARKANSAS STATE HIGHWAY COMMISSION STANDARD SPECIFICATIONS FOR HIGHWAY CONSTRUCTION, EDITION OF 1978 AND APPLICABLE SPECIAL PROVISIONS.

DESIGN SPECIFICATIONS AASHTO STANDARD SPECIFICATIONS FOR HIGHWAY BRIDGES, 1983 WITH CURRENT INTERIM SPECIFICATIONS.

LIVE LOADING HS20 **METHOD OF DESIGN** LOAD FACTOR

MATERIALS AND STRENGTHS

CLASS S(AE) CONCRETE (SUPERSTRUCTURE)	f'c = 3500 PSI
CLASS S CONCRETE (SUBSTRUCTURE)	f'c = 3500 PSI
REINFORCING STEEL (A615 OR A617, GR. 60)	fy = 60,000 PSI
STRUCTURAL STEEL (A572-GR.50) NEW	fy = 50,000 PSI
STRUCTURAL STEEL (A36) EXISTING & NEW	fy = 36,000 PSI
STRUCTURAL STEEL (A7) EXISTING	fy = 33,000 PSI

CONCRETE PILING PILING FOR BENTS SHALL BE 16" OCT. PRECAST CONCRETE AND SHALL BE DRIVEN WITH AN APPROVED AIR, STEAM, OR DIESEL HAMMER TO A MINIMUM BEARING CAPACITY OF 44 TONS PER PILE. ALL PILING SHALL HAVE A MINIMUM PENETRATION OF 20' BELOW THE GROUND LINE. LENGTHS OF PILING SHOWN ARE ASSUMED FOR ESTIMATING QUANTITIES ONLY. ACTUAL LENGTHS TO BE DETERMINED IN THE FIELD. DRIVE ONE 30' TEST PILE IN BENT 1, DRIVE ONE 25' TEST PILE IN BENT 3.

BRIDGE DECK: THE CONCRETE BRIDGE DECK SHALL BE GIVEN A TINE FINISH AS SPECIFIED FOR FINAL FINISHING IN SUBSECTION 802.23 FOR CLASS 6 ROADWAY SURFACE FINISH.

DETAIL DRAWINGS	DRAWING NO.
BENTS	29185 - 29189
SPANS	29190 - 29196
PRECAST CONCRETE PILING	2383
APPROACH GUTTERS TYPE B1	2016B & 2017

PROPOSED STAGE CONSTRUCTION WORK:

STAGE I CONSISTS OF: WIDENING EXISTING BENTS AND CONSTRUCTING A NEW DECK WITH NEW BEAMS WHILE MAINTAINING TRAFFIC ON EXISTING BRIDGE.

STAGE II CONSISTS OF: PLACING TRAFFIC ON COMPLETED STAGE I CONSTRUCTION, REMOVING EXISTING CONCRETE DECK AND END BENT BACKWALLS; WIDENING EXISTING BENTS; RETAINING, REPAIRING, AND PAINTING EXISTING STRUCTURAL STEEL; PLACING SHEAR CONNECTOR STUDS ON EXISTING BEAMS; PLACING NEW EXTERIOR BEAM, POURING NEW DECK; REBUILDING END BENT BACKWALLS, & OTHER MISC. WORK.

THE CONTRACTOR SHALL BE RESPONSIBLE FOR MAKING CHECK MEASUREMENTS OF EXISTING BRIDGE AND MAKING NECESSARY ADJUSTMENT TO THE NEW WORK. HALF-SIZE SHEETS AND ORIGINAL PILING RECORDS OF THE EXISTING BRIDGE MAY BE OBTAINED FROM THE ARKANSAS STATE HIGHWAY AND TRANSPORTATION DEPARTMENT UPON REQUEST.

LAYOUT OF BRIDGE OVER SWIFT BAYOU LAKE VILLAGE - HWY. 35 (BR. & APPRS.) CHICOT COUNTY

ROUTE 65 SEC. 20

ARKANSAS STATE HIGHWAY COMMISSION

LITTLE ROCK, ARK.

Vesal Pinkerton
BRIDGE ENGINEER

DRAWN BY: W.M.A. DATE: 3-24-87
CHECKED BY: GEC DATE: 3-31-87
DESIGNED BY: GEC DATE: 3-87
SCALE: 1" = 20

BRIDGE NO. 2072W DRAWING NO. 29209

DATE REVISED	DATE FILMED	DATE REVISED	DATE FILMED	FED. AID DIST. NO.	STATE	FED. AID PROJ. NO.	SHEET NO.	TOTAL SHEETS
				6	ARK.			
				JOB NO.		20020	54	124
				(1) 2069W-73AW		SPANS	29190	

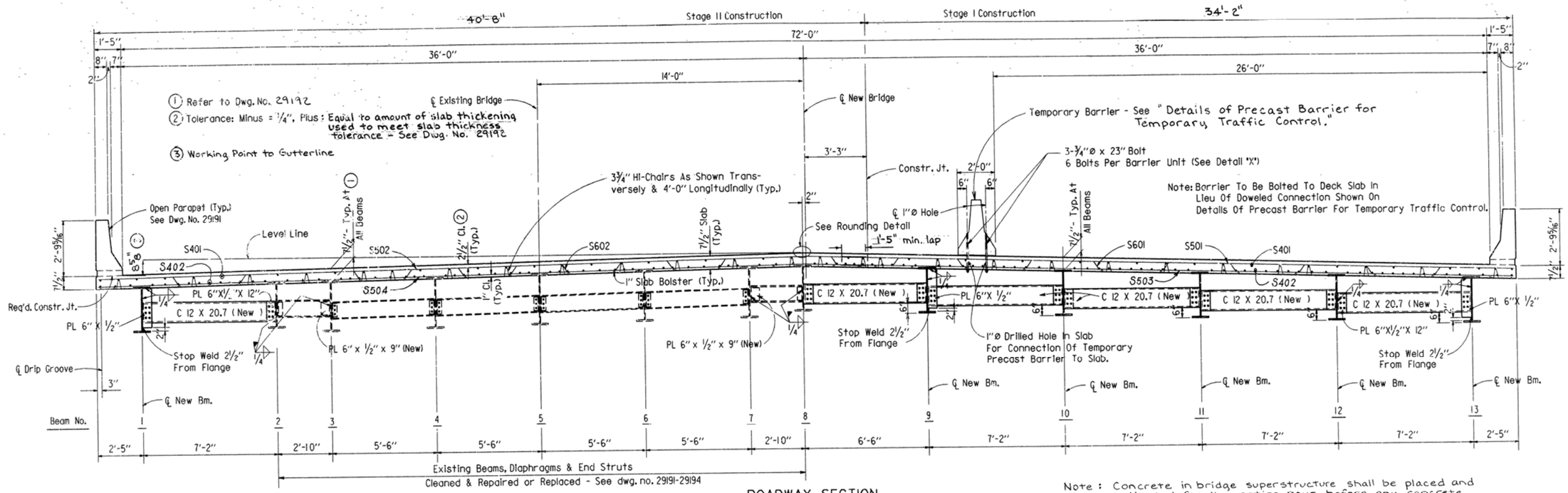

ROADWAY SECTION

(Looking Forward)

Note: Slope Existing Diaphragms & End Struts As Required to obtain fit. Bolt holes may be Field-Reamed As Required. Re-install with new 3/4"Ø H.S. Bolts. Use *Washer Under Bolt Head & Nut.*

Note: For details of Re-installing of Existing Diaphragms & End Struts see dwg. no. 29191.

Note: Concrete in bridge superstructure shall be placed and consolidated for the entire pour before any concrete has taken its initial set. This may require the use of a retarding agent.

For Existing End Struts: (Typ. Except As Shown in Section W-W) Remove all rivets from connection angle (both beam web & strut web). Invert strut to place flange of strut above web & re-install with new 3/4"Ø H.S. Bolts. (Clip Flange Of Existing End Strut in Field As Required.) Use *Washer Under Bolt Head & Nut.*

Expansion Device:
Roadway C15 X 33.9; Conn. Ls 8"X4"X 1/2"
Preformed Joint Sealer - See Preformed Jt. Details, Dwg. No. 29192.
Detail Device 1/8" High & Provide 1/4" Shims using 2 - 1/16" PLs & 1 - 1/8" PL.
5/8"Ø X 8" Studs @ 12" o.c. Top & Bottom - For Alt. Anchor Details See Dwg. No. 29192.

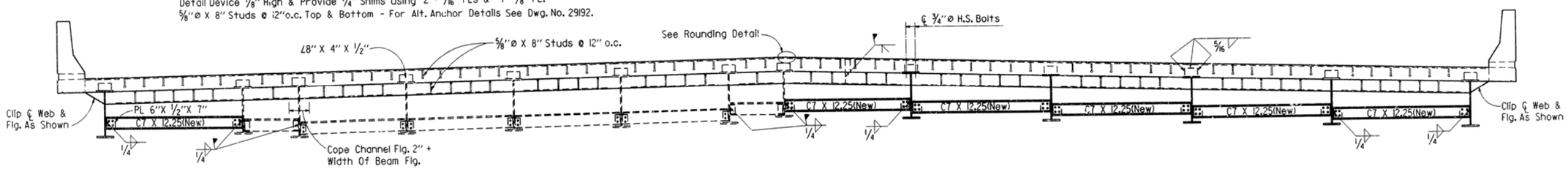

ROADWAY SECTION AT EXP. DEVICE

(Looking Forward)

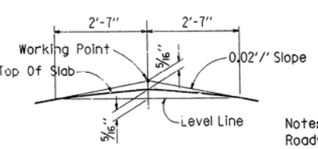

ROUNDING DETAIL

N.T.S.

Note: Working Point Matches Theoretical Roadway Grade.

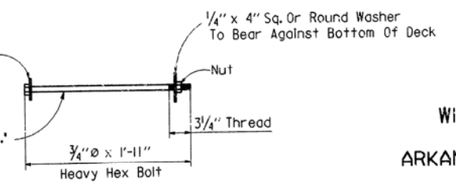

Bolts Shall Be A307 & Shall Be Painted Prior To Installation. Bolts considered subsidiary to the item 'Precast Concrete Barrier.'

DETAIL X

N.T.S.

Wesal Pinkerton
BRIDGE ENGINEER

COMMON DETAILS FOR
WIDENING OF COMP. W-BEAM SPANS
ROUTE SEC.
ARKANSAS STATE HIGHWAY COMMISSION
LITTLE ROCK, ARK.

DRAWN BY: W.M.A.J. DATE: 5-18-87
CHECKED BY: HJD DATE: 7-15-87
DESIGNED BY: GEC DATE: 5-87
SCALE: 3/8" = 1'0" Or As Shown
BRIDGE NO. 2069W-2072W & 2073AW
DRAWING NO. 29190

FED. ROAD DIST. NO.	STATE	FED. AID PROJ. NO.	SHEET NO.	TOTAL SHEETS
6	ARK.			
JOB NO.	20020		56	124
1 2069W-73AW SPANS			29192	

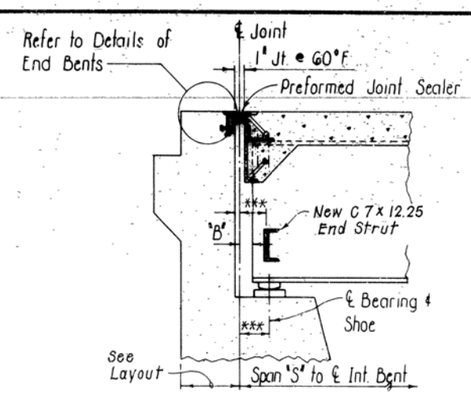

JOINT AT END BENTS
Scale: 3/4" = 1'-0"

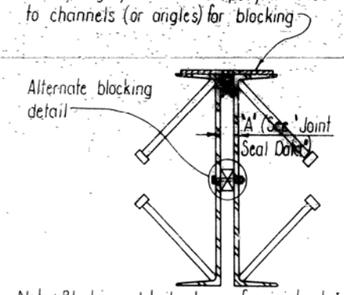

Note: Blocking detail shown for joint at Int. Bent. Joint at End Bent is similar.

DETAILS FOR BLOCKING EXPANSION JOINT DEVICE
Scale: 3/16" = 1"

Note: Each expansion joint device shall be blocked in the shop by the fabricator to the dimension "A", and the blocking details shall be shown on the Shop Drawings. The blocking shall not be removed until pouring of the Slab on one side is complete. Removal shall be just before or after pouring the second side of the joint, as directed by the Engineer.

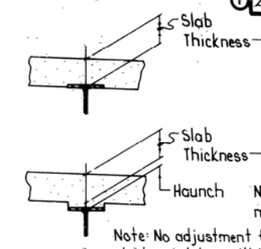

Note: Tolerance for Slab Thickness is minus 1/4" and plus 1".

Note: Provide haunch as required to meet slab tolerances.

Note: No adjustment for increase in concrete & structural steel quantities will be made for haunches or any thickening of slab to meet tolerances.

SLAB THICKENING AND/OR HAUNCH DETAIL

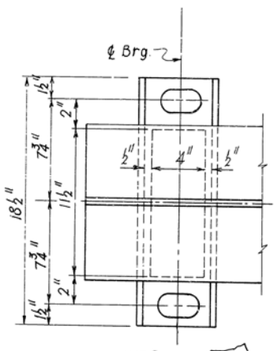

Note: Anchor Bolt, Nut and Washer to be galvanized in accordance with ASTM A153 & SP 100-10. Rubber Washer shall be a closed cell expanded rubber, meeting the requirements of ASTM D1056-78 for RE-42 B2E2 material.

Note: Type SB Shoes shall be paid for as "Existing Steel Replacement."

For Location of SB-2 & SB-3 Shoes see dwg. no. 29193 & 29194.

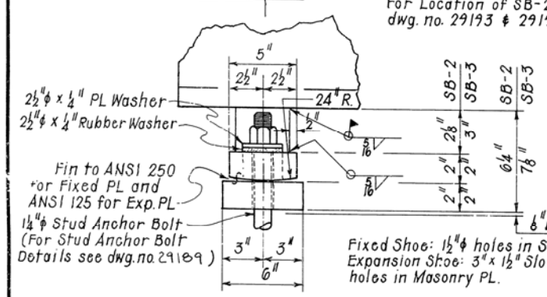

Note:
Use Type SB-2 for 33'-11 1/2" Spans
Use Type SB-3 for 49'-11 1/2" Spans

Fixed Shoe: 1 1/2"ø holes in Sole PL & Masonry PL.
Expansion Shoe: 3" x 1 1/2" Slot in Sole PL; 1 1/2"ø holes in Masonry PL.

TYPE SB-2 & SB-3 SHOES (FIXED OR EXP.)
N.T.S.

NOTE: 8" Bearing Pads to be used under all retained existing shoes & new shoes.

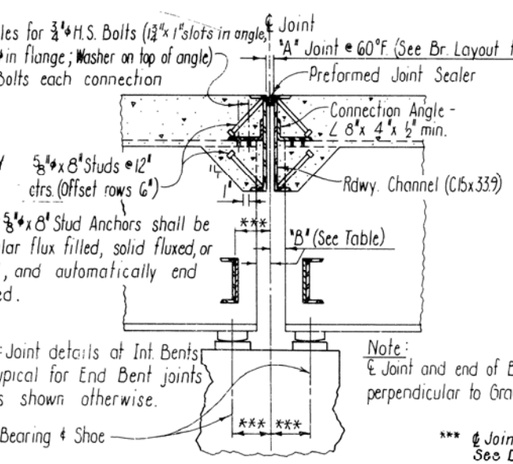

Note: 5/8"ø x 8" Stud Anchors shall be granular flux filled, solid fluxed, or equal, and automatically end welded.

Note: Joint details at Int. Bents are typical for End Bent joints unless shown otherwise.

Note: ℄ Joint and end of Beam perpendicular to Grade.

*** ℄ Joint to ℄ Bearing Varies - See Details.

JOINT AT INTERMEDIATE BENTS
Scale: 1" = 1'-0"

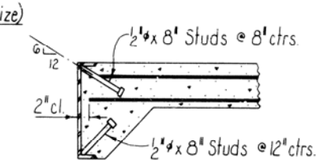

Note: As an alternate to 5/8"ø studs, 1/2"ø x 8" studs spaced as shown may be used. Studs shall be granular flux filled, solid fluxed, or equal and automatically end welded. Use weight of 5/8"ø studs as basis of measurement of structural steel in anchors.

DETAILS OF ALTERNATE ANCH.
Scale: 1" = 1'-0"

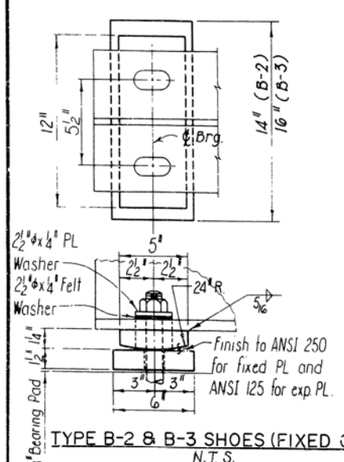

TYPE B-2 & B-3 SHOES (FIXED OR EXP.)
N.T.S.

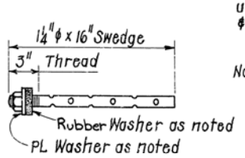

ANCHOR BOLT DETAIL
N.T.S.
(Use With Type B-2 & B-3 Shoes Only.)

Note: Type B-2 and B-3 Shoes shall be paid for as "Structural Steel in Beam Spans (A572-Gr. 50)."

FIXED SHOE: 1 1/2"ø holes in Sole Plate, Masonry Plate & Beam Flange.
EXPANSION SHOE: 3" x 1 1/2" Slot in Sole Plate & Beam Flange; 1 1/2"ø holes in Masonry Plate.

Note:
Use Type B-2 for 33'-11 1/2" Spans
Use Type B-3 for 49'-11 1/2" Spans

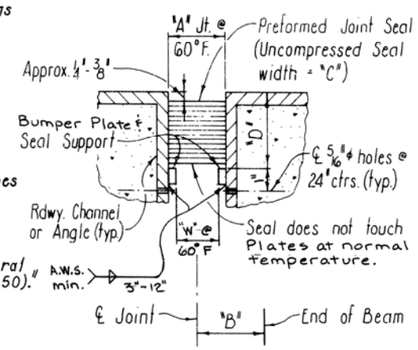

Note: Dimension "D" shall conform to the recommendations of the Seal manufacturer as approved by the Bridge Engineer.

DETAIL OF JOINT SEAL & SUPPORT
No Scale

Note: The Seal shall be in one piece (without splices) for the full width of the joint, except that lengths 55 feet and longer may have a factory made splice. Splices, when required, shall be shown on the Shop Drawings and shall be placed near the high ends of the Roadway. Separation of the splice during installation shall be cause for rejection of the Seal.

① Plates may be equal thickness as shown or unequal thickness (1/4" min.) to provide the width "W".

JOINT SEAL DATA

"A" (Joint Width Perpendicular to Joint @ 60°F.)*	"B"	"C" (Uncompressed Seal Width)	"W" (Width between plates)	Bumper Plate Size ①
1"	1 3/4" ±	1 5/8" **	1/4"	1" x 3/8"
1 1/8"	1 7/8" ±	1 3/4"	3/8"	1" x 3/8"
1 5/8"	2 1/8" ±	2 1/2"	5/8"	1" x 1/2"
1 7/8"	2 1/4" ±	3"	5/8"	1" x 5/8"
2 1/4"	2 3/8" ±	3 1/2"	3/4"	1" x 3/4"
2 5/8"	2 5/8" ±	4"	7/8"	1" x 7/8"

* Installation is limited to 40°F. min. and 80°F. max.
** 1 3/4" Seal may be used.

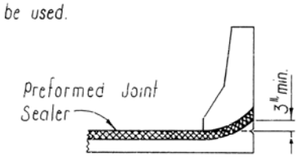

JOINT SEAL PLACEMENT AT CURB
Scale: 1/2" = 1'-0"

GENERAL NOTES

CONCRETE: ALL CONCRETE TO BE CLASS S OR S(AE) AS SHOWN ON THE LAYOUT. ALL EXPOSED CORNERS TO BE CHAMFERED 3/4" UNLESS OTHERWISE NOTED.

CONCRETE SLABS AND SPANS THRU 50 FEET IN LENGTH SHALL BE POURED IN ONE CONTINUOUS OPERATION WITH A STRIKE OFF EXTENDING OVER THE WHOLE SPAN LENGTH.

A MINIMUM OF 72 HOURS SHALL ELAPSE BETWEEN COMPLETION OF THE SLAB AND THE POURING OF THE PARAPET RAILING OR CURB.

REINFORCING STEEL: ALL REINFORCING STEEL SHALL CONFORM TO ASTM A615 OR A617, GRADE 60. THE REINFORCING STEEL IS TO BE ACCURATELY LOCATED IN THE FORMS AND FIRMLY HELD IN PLACE BY STEEL WIRE SUPPORTS, SUFFICIENT IN NUMBER AND SIZE TO PREVENT DISPLACEMENT DURING THE COURSE OF CONSTRUCTION. THE WIRE SUPPORTS WILL NOT BE PAID FOR DIRECTLY BUT WILL BE CONSIDERED SUBSIDIARY TO THE ITEM "REINFORCING STEEL." SHOP LISTS AND BENDING DIAGRAMS OF REINFORCING STEEL, INCLUDING WIRE SUPPORTS, MAY BE SUBMITTED FOR APPROVAL BEFORE FABRICATION IS BEGUN.

STRUCTURAL STEEL: ALL STRUCTURAL STEEL SHALL BE ASTM A36 UNLESS OTHERWISE NOTED.

ALL FIELD CONNECTIONS TO BE BOLTED WITH HIGH STRENGTH BOLTS.

ALL BOLTS TO BE 3/4" ø, WITH 13/16" ø OPEN HOLES, UNLESS OTHERWISE NOTED.

HOLES FOR 3/4" ø BOLTS FOR CONNECTION OF EXPANSION DEVICES, DIAPHRAGMS, AND END STRUTS MAY BE 15/16" ø IF A WASHER IS SUPPLIED FOR USE UNDER BOTH THE NUT AND THE HEAD OF THE BOLT.

STRUCTURAL SHAPES OF EQUAL OR GREATER STRENGTH MAY BE SUBSTITUTED FOR SHAPES SHOWN, BUT PAYMENT WILL BE MADE ON THE BASIS OF SHAPES SHOWN.

UNLESS OTHERWISE NOTED ON SPAN DETAIL DRAWINGS, ALL NEW STRUC. STEEL, EXCEPT SURFACES IN CONTACT WITH CONCRETE, SHALL BE GIVEN ONE SHOP COAT AND TWO FIELD COATS IN ACCORDANCE WITH SECTION 807.59 OF THE SPECIFILATIONS AND APPLICABLE SPECIAL PROVISIONS.
FOR PAINTING EXISTING STRUCTURAL STEEL SEE JOB SP "CLEANING AND PAINTING EXISTING STRUCTURAL STEEL."

BEARINGS SHALL BE FINALLY SEATED IN ACCORDANCE WITH SECTION 807.51 OF THE SPECIFICATIONS. THIS WORK AND MATERIAL ARE TO BE CONSIDERED AS SUBSIDIARY TO THE ITEM "STRUCTURAL STEEL IN BEAM SPANS" AND WILL NOT BE PAID FOR DIRECTLY.

ALL WELDED CONNECTIONS TO BE 5/16" FILLET SHOP WELDS UNLESS NOTED OTHERWISE. ALL WELDING SHALL CONFORM TO THE AMERICAN WELDING SOCIETY STANDARD SPECIFICATIONS FOR WELDED HIGHWAY AND RAILWAY BRIDGES, CURRENT EDITION.

ANCHOR BOLTS SHALL BE GALVANIZED TO CONFORM TO ASTM SPECIFICATIONS, DESIGNATION A153.

DIAPHRAGMS SHALL BE INSTALLED AS BEAMS ARE ERECTED. DIAPHRAGMS SHALL BE INSTALLED AND COMPLETELY BOLTED PRIOR TO POURING OF FLOOR SLABS.

SPECIFICATIONS: ARKANSAS STATE HIGHWAY COMMISSION STANDARD SPECIFICATIONS FOR HIGHWAY CONSTRUCTION, EDITION OF 1978 WITH APPLICABLE SPECIAL PROVISIONS.

THIS DRAWING SHOWS GENERAL FEATURES OF DESIGN ONLY. SHOP DRAWINGS SHALL BE MADE IN ACCORDANCE WITH THE SPECIFICATIONS, SUBMITTED AND APPROVAL SECURED BEFORE FABRICATION IS BEGUN.

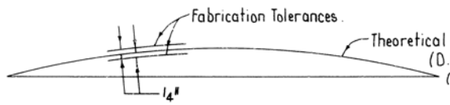

FABRICATION TOLERANCES
No Scale

COMMON DETAILS FOR
WIDENING OF COMP. W-BM. SPANS
ROUTE SEC.

ARKANSAS STATE HIGHWAY COMMISSION
LITTLE ROCK, ARK.

DRAWN BY: H. Maj DATE: 5-18-87
CHECKED BY: HJD DATE: 2-19-87
DESIGNED BY: GEC DATE: 5-87
SCALE: As Shown

BRIDGE ENGINEER

BRIDGE NO. 2069W-2073AW

DRAWING NO. 29192

DATE REVISED	DATE FILMED	DATE REVISED	DATE FILMED	FED. ROAD DIST. NO.	STATE	FED. AID PROJ. NO.	SHEET NO.	TOTAL SHEETS
2-4-88	770-2-5-89			6	ARK.			
				JOB NO.		20020	55	124
				(1) 2069W-73AW SPANS			29191	

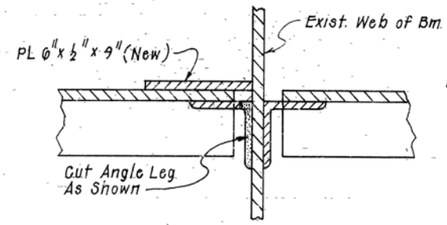

SECTION V-V
N.T.S.

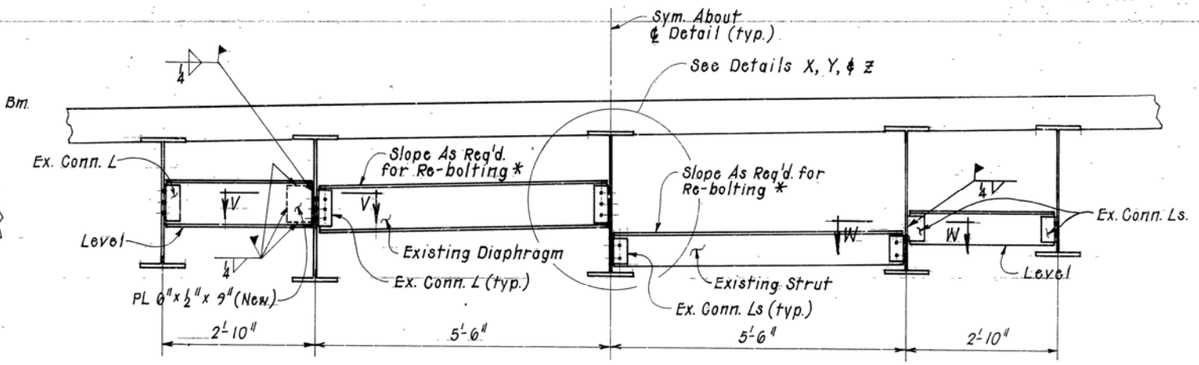

DETAILS OF RE-INSTALLATION OF EXISTING DIAPHRAGMS & END STRUTS
N.T.S.

*Note: Slope Exist. Diaphragms & End Struts As Req'd. to obtain fit. Bolt holes may be Field-Reamed As Req'd. Re-install with new ¾"ϕ H.S. Bolts. Use Washer Under Bolt Head & Nut.

For Existing End Struts: (Typ. Except As Shown in Section W-W) Remove all rivets from connection angle (both beam web & strut web), invert strut to place flange of strut above web & re-install with new ¾"ϕ H.S. Bolts. (Clip Flange Of Exist. End Strut in Field As Required.) Use Washer Under Bolt Head & Nut.

For Existing Diaphragms: (Typ. Except As Shown in Section V-V) Remove all rivets from connection angle (both beam web & diaphragm web), reinstall with new ¾"ϕ H.S. Bolts. Use Washer Under Bolt Head & Nut.

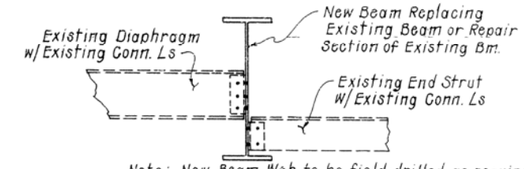

Note: New Beam Web to be field-drilled as required for re-installing with new ¾"ϕ H.S. Bolts.

DETAIL X
N.T.S.

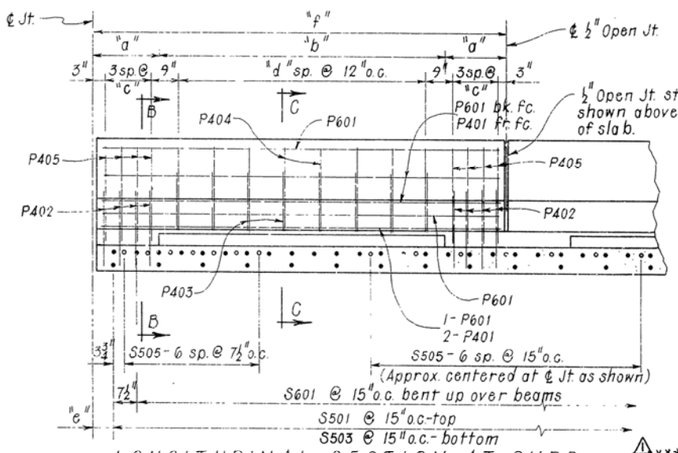

LONGITUDINAL SECTION AT CURB
N.T.S.

Note: S601, S501, S503 & S505 bars in slab are shown for Br. No. 2070W, 2071W & 2073AW only. For Br. No. 2069W & 2072W see dwg. no. 29195.

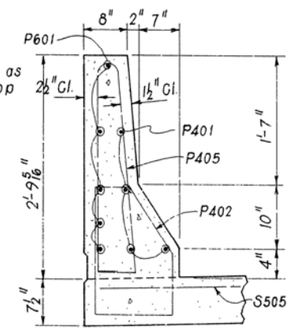

SECTION B-B
1" = 1'-0"

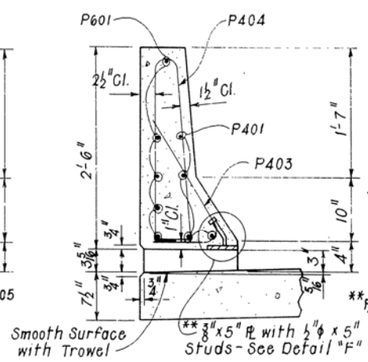

SECTION C-C
1" = 1'-0"

** At locations noted on Layout, construct parapet panel without open drains, omitting Plate & Studs. Reinforcing details to remain unchanged.

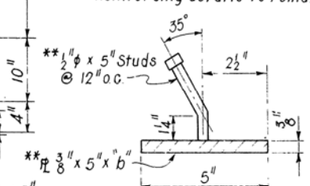

DETAIL F
N.T.S.

NOTES:
PARAPET STUDS SHALL BE 5" LONG, GRANULAR FLUX FILLED, SOLID FLUX OR EQUAL AND AUTOMATICALLY WELDED TO PLATE. STUDS AND PLATE ARE TO BE MEASURED AND PAID FOR AS "STRUCTURAL STEEL IN BEAM SPANS (A572-GR. 50)."

THE SURFACES OF THE 3/8" PLS WHICH WILL NOT BE IN CONTACT WITH CONCRETE SHALL RECEIVE TWO COATS OF PAINT IN THE SHOP. THESE COATS SHALL BE THOSE SPECIFIED AS FIRST SHOP COAT AND SECOND FIELD COAT IN SUBSECTION 807.59 AND SP 807-10.

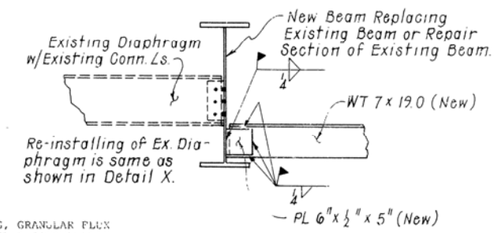

DETAIL Y
N.T.S.

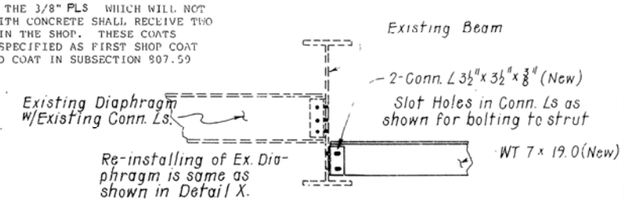

DETAIL Z
N.T.S.

***The ¾"ϕ x 4" Studs shall be granular flux filled, solid fluxed, or equal, and automatically end welded in the field to the beam flanges in accordance with the manufacturer's recommendations. ⅞"ϕ Studs may be substituted for the ¾"ϕ Studs shown at the ratio of 0.735-⅞" Studs in place of 1-¾" Stud. The ¾"ϕ Studs shall be used as the basis of payment at 61.5# per 100 studs. Stud spacing shall not exceed 24." Contractor may choose to have studs for new beams shop welded.

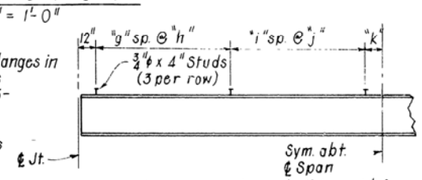

Note: Stud Shear Connectors shall be paid for as "Structural Steel in Beam Spans (A572-Gr. 50)."

DETAIL OF STUD SHEAR CONNECTOR SPACING
N.T.S.

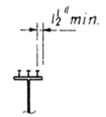

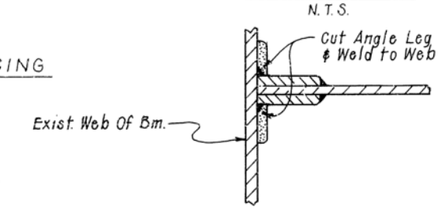

SECTION W-W
N.T.S.

DEAD LOAD DEFLECTIONS

Span Length	Beam Line No.	Structural Steel ¼ pt.	Structural Steel ½ pt.	Str. Steel & Slab ¼ pt.	Str. Steel & Slab ½ pt.	Str. Steel, Slab & Parapet ¼ pt.	Str. Steel, Slab & Parapet ½ pt.
49'-11½"	New Ext. Bm. Lines 1 & 13	⅛"	⅛"	5/8"	7/8"	¾"	1"
	Ex. Bm. Lines 2 & 8	⅛"	⅛"	½"	¾"	9/16"	13/16"
	Ex. Bm. Lines 3 & 7	1/16"	⅛"	5/16"	7/16"	7/16"	7/16"
	Ex. Bm. Lines 4, 5 & 6	1/16"	⅛"	7/16"	⅝"	7/16"	11/16"
	New Bm. Lines 9, 10, 11, 12	⅛"	⅛"	¾"	1"	15/16"	1 1/16"
	Replacement Bm. Lines 3 & 7	1/16"	⅛"	⅜"	9/16"	7/16"	⅝"
	Replacement Bm. Lines 4,5 & 6	1/16"	⅛"	½"	11/16"	9/16"	¾"
33'-11½"	New Ext. Bm. Lines 1 & 13	0"	1/16"	¼"	5/16"	¼"	⅜"
	Ex. Bm. Lines 2 & 8	1/16"	1/16"	¼"	⅜"	¼"	⅜"
	Ex. Bm. Lines 3 & 7	0"	1/16"	⅛"	5/16"	⅛"	5/16"
	Ex. Bm. Lines 4, 5 & 6	0"	1/16"	3/16"	¼"	3/16"	¼"
	New Bm. Lines 9, 10, 11, 12	0"	1/16"	¼"	⅜"	¼"	⅜"
	Replacement Bm. Lines 3 & 7	0"	1/16"	3/16"	¼"	3/16"	¼"
	Replacement Bm. Lines 4,5 & 6	0"	1/16"	3/16"	5/16"	¼"	5/16"

TABLE OF VARIABLES

Span Length	VARIABLES FOR SHEAR CONN. SPACING: Beam Line No.	"g"	"h"	"i"	"j"	"k"
49'-11½"	New Beam Lines 1, 9-13	15	10"	11	12"	5¾"
	Replacement Bm. Lines 3-7	12	12"	8	17"	7¾"
	Existing Bm. Lines 2-8	10	12"	10	16"	7¾"
33'-11½"	New Beam Lines 1, 9-13	9	10"	8	12"	5¾"
	Replacement Bm. Lines 3-7	9	10"	6	16"	5¾"
	Existing Bm. Lines 2-8	9	12"	6	13"	5¾"

VARIABLES FOR OPEN PARAPET RAIL: Span Length	"a"	"b"	"c"	"d"	"e"	"f"
49'-11½"	1'-11 15/16"±	6'-0"	6"±	5	7¼"	9'-11⅞"±
33'-11½"	1'-7 15/16"±	8'-0"	4⅜"±	7	8¾"	11'-3 15/16"±

***In lieu of automatic end welding, shear connector studs may be fillet welded in accordance with AWS Structural Welding Code (AWS D1-1-80).

Added Notes 2/4/88 C.P.B.

NOTES

ALL NEW & EXISTING LONGITUDINAL BEAMS ARE CONSIDERED MAIN MEMBERS. NEW BEAMS SHALL BE A572-50 OR AS NOTED. ALL NEW STRUCTURAL STEEL SHALL BE PAID FOR AT THE PRICE BID PER POUND FOR "STRUCTURAL STEEL IN BEAM SPANS (A572-50)", EXCEPT AS PROVIDED IN SP JOB 20020 "REPAIRING AND REPLACING EXISTING STRUCTURAL STEEL."

ALL NEW BEAMS ARE CONSIDERED MAIN LOAD CARRYING MEMBERS AND SHALL MEET THE LONGITUDINAL CHARPY V-NOTCH TEST SPECIFIED IN SECTION 807.05 OF THE STANDARD SPECIFICATIONS.

DESIGN SPECIFICATIONS: AASHTO 1983 WITH INTERIM SPECIFICATIONS.

LIVE LOAD: HS20

METHOD OF DESIGN: LOAD FACTOR

MATERIAL STRENGTH:

CLASS S OR S(AE) CONCRETE (N=9) f'c = 3500 PSI
REINFORCING STEEL (A615 OR A617) fy = 60,000 PSI
STRUCTURAL STEEL (A36) fy = 36,000 PSI EXISTING & NEW
STRUCTURAL STEEL (A572, GRADE 50) fy = 50,000 PSI NEW
STRUCTURAL STEEL (A7) fy = 33,000 PSI EXISTING

FOR PAINTING INFORMATON AND ADDITIONAL GENERAL NOTES, SEE DRG. NO. 29192.

COMMON DETAILS FOR WIDENING OF COMP. W-BM. SPANS

ROUTE SEC.

ARKANSAS STATE HIGHWAY COMMISSION
LITTLE ROCK, ARK.

DRAWN BY: A.D.A. DATE: 5-16-87
CHECKED BY: HJD DATE: 2-19-87
DESIGNED BY: GEC DATE: 5-87
SCALE: As Shown

Gerald Pinkerton
BRIDGE ENGINEER

BRIDGE NO. 2069W-2073AW DRAWING NO. 29191

DATE REVISED	DATE FILMED	DATE REVISED	DATE FILMED	FED. RD. DIST. NO	STATE	FED. AID PROJ. NO.	SHEET NO.	TOTAL SHEETS
10-22-96				6	ARK.			
				JOB NO.		R20096	7	122

2 TYPICAL SECTIONS

STATE OF ARKANSAS REGISTERED PROFESSIONAL ENGINEER No 2312 W. J. JEWELL

4-LANE WITH 60' TO 100' DEPRESSED MEDIAN

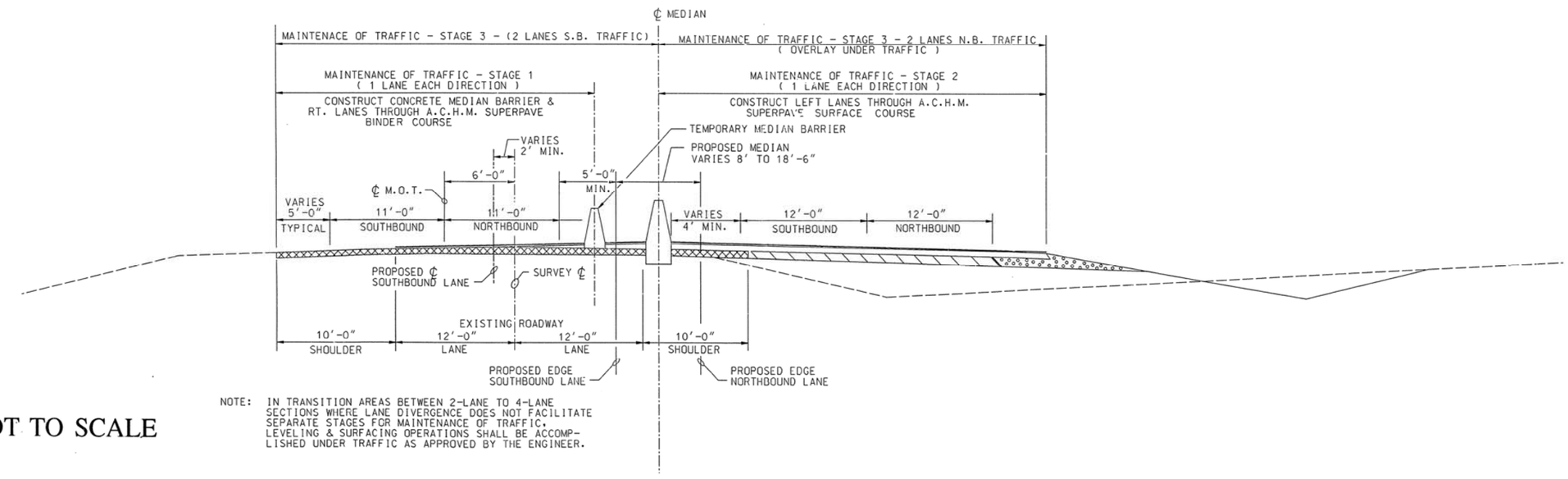

NOTE: IN TRANSITION AREAS BETWEEN 2-LANE TO 4-LANE SECTIONS WHERE LANE DIVERGENCE DOES NOT FACILITATE SEPARATE STAGES FOR MAINTENANCE OF TRAFFIC. LEVELING & SURFACING OPERATIONS SHALL BE ACCOMPLISHED UNDER TRAFFIC AS APPROVED BY THE ENGINEER.

NOT TO SCALE

4 LANE WITH 8'-0" TO 18'-6" MEDIAN

MAINTENANCE OF TRAFFIC
TYPICAL SECTIONS

D C B A 0 A B C D

DATE REVISED	DATE FILMED	DATE REVISED	DATE FILMED	FED. RD. DIST. NO	STATE	FED. AID PROJ. NO.	SHEET NO.	TOTAL SHEETS
				6	ARK.			
				JOB NO.		R20096	18	122

② SPECIAL DETAILS

STATE OF ARKANSAS REGISTERED PROFESSIONAL ENGINEER No 2312 J. JEWELL

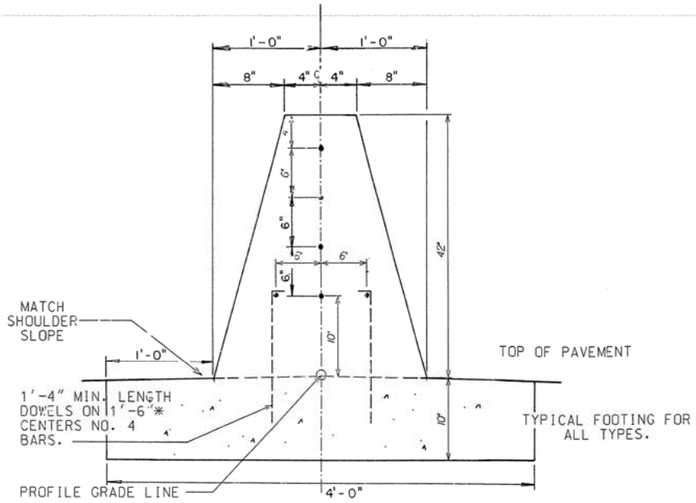

*DOWELL BARS WILL NOT BE REQUIRED IF BARRIER WALL AND BASE ARE CAST AS A SINGLE UNIT.

TYPE A

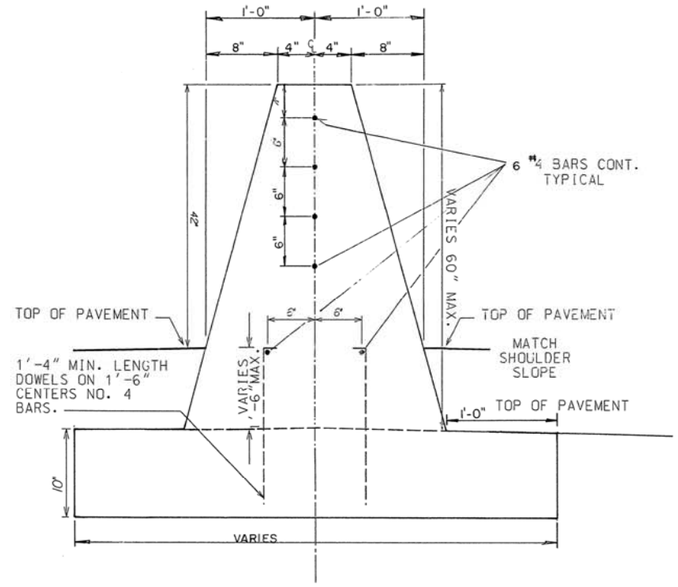

TYPE B

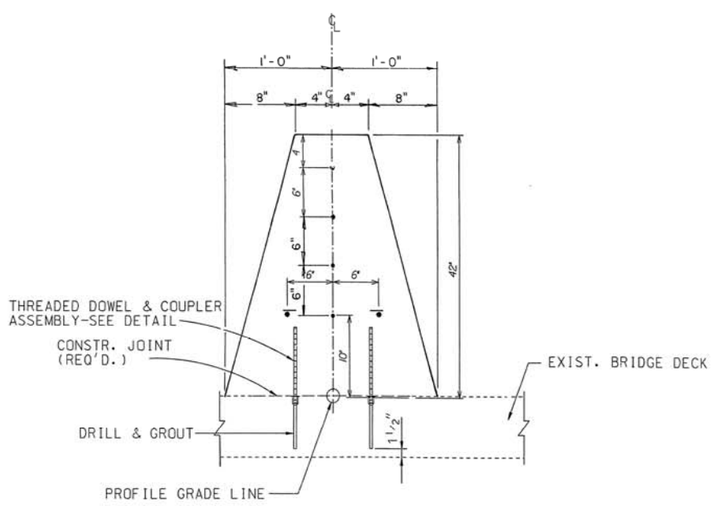

TYPE D

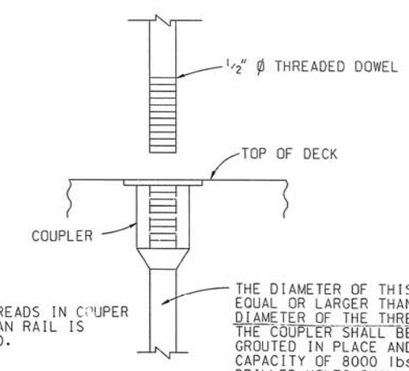

NOTE: PROTECT THREADS IN COUPER UNTIL MEDIAN RAIL IS CONSTRUCTED.

THE COUPLER SHALL BE INSERTED IN DRILLED HOLES GROUTED IN PLACE AND SHALL HAVE A MINIMUM CAPACITY OF 8000 lbs. IN TENSION (DEPTH OF DRILLED HOLES SHALL NOT EXCEED 4½")

THREADED DOWEL AND COUPLER ASSEMBLY

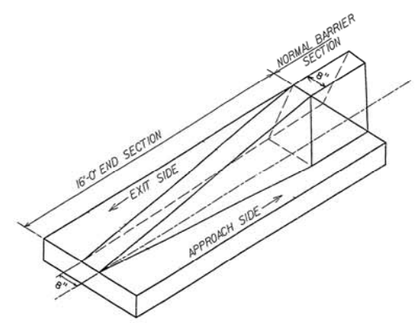

END TREATMENT ISOMETRIC DETAIL

NOTES:

1. THREADED DOWEL AND COUPLER ASSEMBLY SHALL BE OF AN APPROVED TYPE AND SHALL DEVELOP IN TENSION AT THE POINT OF SPLICING AT LEAST 125 PERCENT OF THE STRENGTH OF THE DOWEL BAR.
2. DOWEL BARS SHALL BE OF MINIMUM 60 KSI YIELD STRENGTH AND THREADED AS REQUIRED.
3. THREADED DOWEL AND COUPLER ASSEMBLY SHALL BE EPOXY COATED IN ACCORDANCE WITH THE REQUIREMENTS OF REINF. BARS.
4. THREADED DOWEL AND COUPLER ASSEMBLY SHALL BE CONSIDERED SUBSIDIARY TO THE ITEM "CONCRETE BARRIER WALL".

TYPE D BARRIER REQUIRED ON EXIST. BRIDGE AT

STA. 167+20.77 TO STA. 168+22.49
STA. 298+00.19 TO STA. 299+49.97
STA. 355+74.25 TO STA. 357+23.91

CONCRETE BARRIER WALL (MEDIAN TYPE SPECIAL) DETAILS

D C B A 0 A B C D