DATE REVISED	DATE FILMED	DATE REVISED	DATE FILMED	FED.RD. DIST.NO.	STATE	FED. AID PROJ. NO.	SHEET NO.	TOTAL SHEETS
09-16-21				6	ARK.			
11-19-21				JOB NO.		110800	1	49
12-17-21								

(2) I-40 TRUCK PARKING EXPANSION PROJECT (PH. 1) (WEST MEMPHIS) (S)

ARKANSAS DEPARTMENT OF TRANSPORTATION
CONSTRUCTION PLANS FOR STATE HIGHWAY

I-40 TRUCK PARKING EXPANSION PROJECT (PH. 1) (WEST MEMPHIS) (S)

CRITTENDEN COUNTY

ROUTE 40 SECTION 52

JOB 110800

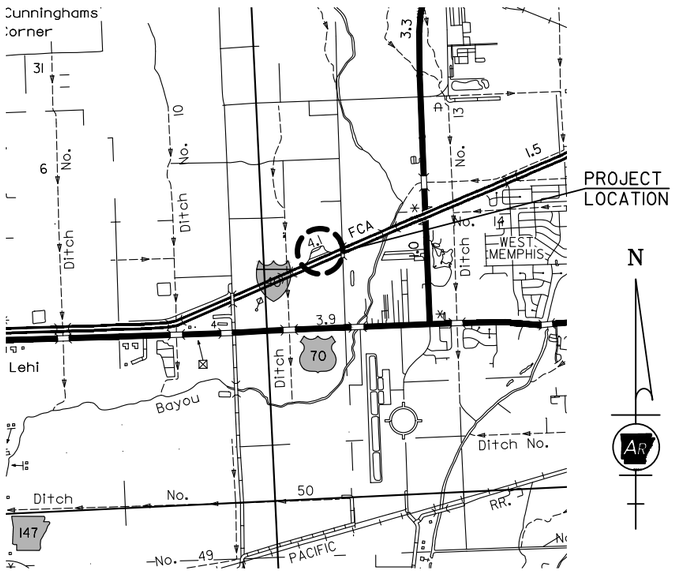

VICINITY MAP

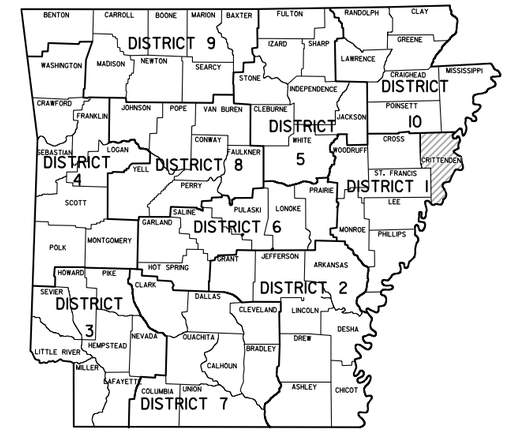

ARK. HWY. DIST. NO. 1

NOT TO SCALE

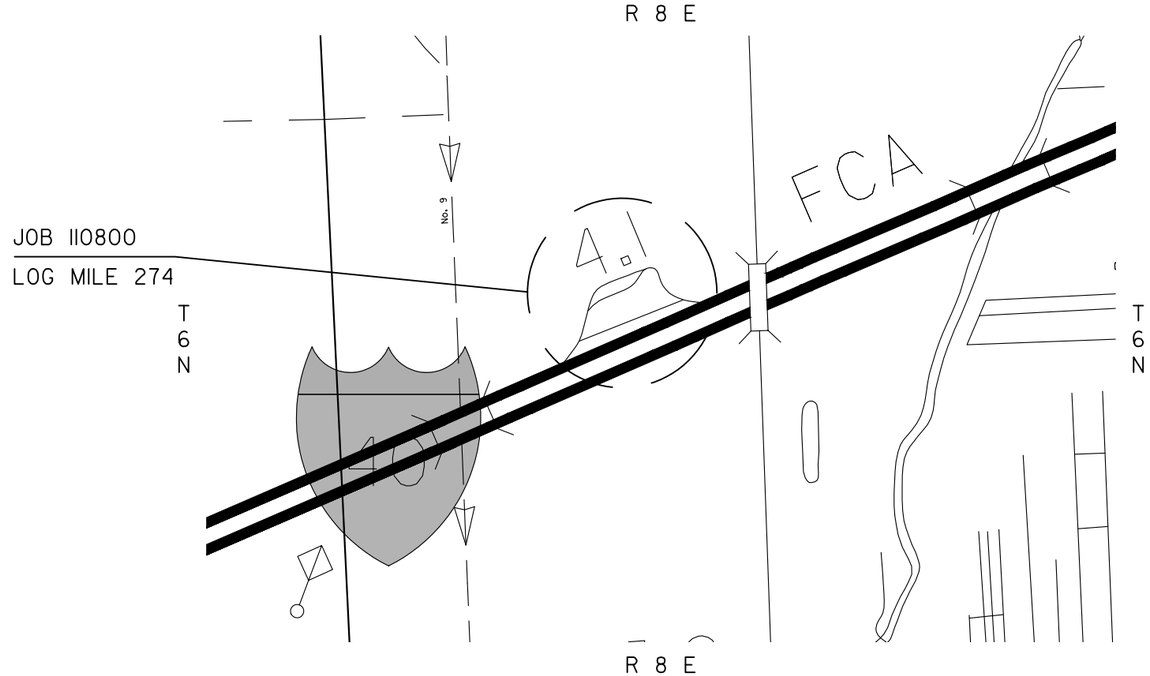

• DESIGN TRAFFIC DATA •

DESIGN YEAR	2041
2021 ADT	650
2041 ADT	660
2021 DHV	73
DIRECTIONAL DISTRIBUTION	1.00
TRUCKS	95%

CERTIFICATE OF AUTHORIZATION
CEI Engineering Associates, Inc.
No. 118
ARKANSAS ENGINEER

STATE OF ARKANSAS
REGISTERED PROFESSIONAL ENGINEER
No. 10479
BRENT L. MASSEY
12/17/2021

NO LENGTH INVOLVED

BEGINNING OF PROJECT	MID POINT OF PROJECT	END OF PROJECT
LATITUDE = N 35°09'18" LONGITUDE = W 90°14'36"	LATITUDE = N 35°09'23" LONGITUDE = W 90°14'28"	LATITUDE = N 35°09'24" LONGITUDE = W 90°14'18"

12/17/2021

31944 - CS.dgn

DATE REVISED	DATE FILMED	DATE REVISED	DATE FILMED	FED.RD. DIST.NO.	STATE	FED. AID PROJ. NO.	SHEET NO.	TOTAL SHEETS
05-06-21		11-19-21		6	ARK.			
06-04-21		12-17-21		JOB NO.		110800	2	49
09-16-21								

(2) INDEX OF SHEETS AND STANDARD DRAWINGS

STATE OF ARKANSAS REGISTERED PROFESSIONAL ENGINEER No. 10479 BRENT L. MASSEY

12/17/2021

INDEX OF SHEETS

SHEET NO.	TITLE
1	TITLE SHEET
2	INDEX OF SHEETS AND STANDARD DRAWINGS
3	GOVERNING SPECIFICATIONS AND GENERAL NOTES
4 - 13	SPECIAL DETAILS
14 - 16	TEMPORARY EROSION CONTROL DETAILS
17	MAINTENANCE OF TRAFFIC DETAILS
18 - 19	PERMANENT PAVEMENT MARKING PLAN
20 - 21	QUANTITIES
22 - 23	SUMMARY OF QUANTITIES AND REVISIONS
24 - 25	SURVEY CONTROL DETAILS
26	DEMOLITION PLAN
27 - 28	SITE PLAN
29 - 30	GRADING PLAN
31 - 33	UTILITY PLAN
34 - 36	CONDUIT DIAGRAM
37	SIGN PLACEMENT PLAN
38	ILLUMINATION NOTES AND QUANTITIES
39	ILLUMINATION TABLES
40	ILLUMINATION LAYOUT - 100 SCALE
41 - 42	ILLUMINATION LAYOUT - 60 SCALE
43 - 49	ILLUMINATION DETAILS

ROADWAY STANDARD DRAWINGS

DRWG.NO.	TITLE	DATE
CDP-1	CONCRETE DITCH PAVING	12-08-16
CG-1	CURBING DETAILS	11-29-07
DR-1	DETAILS OF DRIVEWAYS & ISLANDS	11-07-19
FES-1	FLARED END SECTION	10-18-96
FES-2	FLARED END SECTION	10-18-96
FPC-9S	DETAILS OF DROP INLET & JUNCTION BOX (TYPE ST)	07-26-12
PCC-1	CONCRETE PIPE CULVERT FILL HEIGHTS & BEDDING	02-27-14
PM-1	PAVEMENT MARKING DETAILS	02-27-20
SD-6	HEAVY DUTY PULL BOX	11-16-17
SD-9	SERVICE POINT	11-07-19
SD-11	STEEL POLE WITH MAST ARM	11-16-17
SHS-3	DETAIL OF BREAKAWAY SIGN SUPPORTS FOR GUIDE SIGNS	09-12-13
SHS-5	DETAILS OF GUIDE SIGN PANELS	09-12-13
SHS-6	MOUNTING DETAILS FOR DEMOUNTABLE LEGEND ON GUIDE SIGNS	09-12-13
SHS-7	DETAIL OF OMNI-DIRECTIONAL BREAKAWAY SIGN SUPPORTS	09-12-13
TC-1	STANDARD TRAFFIC CONTROLS FOR HIGHWAY CONSTRUCTION	11-07-19
TC-2	STANDARD TRAFFIC CONTROLS FOR HIGHWAY CONSTRUCTION	05-20-21
TC-3	STANDARD TRAFFIC CONTROLS FOR HIGHWAY CONSTRUCTION	08-12-21
TEC-1	TEMPORARY EROSION CONTROL DEVICES	11-16-17
TEC-2	TEMPORARY EROSION CONTROL DEVICES	06-02-94
TEC-3	TEMPORARY EROSION CONTROL DEVICES	11-03-94
WR-2	WHEELCHAIR RAMPS ALTERATIONS ONLY	10-09-03

DATE REVISED	DATE FILMED	DATE REVISED	DATE FILMED	FED.RD. DIST.NO.	STATE	FED. AID PROJ. NO.	SHEET NO.	TOTAL SHEETS
04-26-21		09-16-21		6	ARK.			
05-06-21		11-19-21		JOB NO.		110800	3	49
06-04-21		12-17-21		GOVERNING SPECIFICATIONS AND GENERAL NOTES				
06-23-21								

2

STATE OF ARKANSAS REGISTERED PROFESSIONAL ENGINEER No. 10479 BRENT L. MASSEY

12/17/2021

GOVERNING SPECIFICATIONS

ARKANSAS STATE HIGHWAY COMMISSION STANDARD SPECIFICATIONS FOR HIGHWAY CONSTRUCTION, EDITION OF 2014, AND THE FOLLOWING SPECIAL PROVISIONS AND SUPPLEMENTAL SPECIFICATIONS:

NUMBER	TITLE
ERRATA_____	ERRATA FOR THE BOOK OF STANDARD SPECIFICATIONS
100-3_____	CONTRACTOR'S LICENSE
100-4_____	DEPARTMENT NAME CHANGE
102-2_____	ISSUANCE OF PROPOSALS
108-1_____	LIQUIDATED DAMAGES
108-2_____	WORK ALLOWED PRIOR TO ISSUANCE OF WORK ORDER
110-1_____	PROTECTION OF WATER QUALITY AND WETLANDS
210-1_____	UNCLASSIFIED EXCAVATION
306-1_____	QUALITY CONTROL AND ACCEPTANCE
505-1_____	PORTLAND CEMENT CONCRETE DRIVEWAY
600-2_____	INCIDENTAL CONSTRUCTION
603-1_____	LANE CLOSURE NOTIFICATION
604-1_____	RETROREFLECTIVE SHEETING FOR TRAFFIC CONTROL DEVICES IN CONSTRUCTION ZONES
604-3_____	TRAFFIC CONTROL DEVICES IN CONSTRUCTION ZONES (MASH)
605-1_____	CONCRETE DITCH PAVING
620-1_____	MULCH COVER
621-1_____	FILTER SOCKS
632-1_____	CONCRETE ISLAND
633-1_____	CONCRETE WALKS, CONCRETE STEPS, AND HAND RAILING
634-1_____	CURBING
700-2_____	TRAFFIC CONTROL FACILITIES
723-1_____	GENERAL REQUIREMENTS FOR SIGNS
730-1_____	BREAKAWAY SIGN SUPPORT
JOB 110800__	BIDDING REQUIREMENTS AND CONDITIONS
JOB 110800__	BROADBAND INTERNET SERVICE FOR FIELD OFFICE
JOB 110800__	CONCRETE DITCH PAVING (TYPE FLUME)
JOB 110800__	CONCRETE PULL BOX (TYPE 4 HD)
JOB 110800__	ELECTRICAL CONDUCTORS FOR LUMINAIRES
JOB 110800__	ELECTRICAL CONDUCTORS-IN-CONDUIT
JOB 110800__	ESTABLISHING CONTRACT TIME - WORKING DAY CONTRACT
JOB 110800__	FIBER OPTIC FACILITIES
JOB 110800__	HIGH MAST ILLUMINATION ASSEMBLY
JOB 110800__	LED ROADWAY ILLUMINATION POLE
JOB 110800__	MAINTENANCE OF TRAFFIC
JOB 110800__	MANDATORY ELECTRONIC CONTRACT
JOB 110800__	MANDATORY ELECTRONIC DOCUMENT SUBMITTAL
JOB 110800__	NATURAL GAS DISTRIBUTION
JOB 110800__	PARTNERING REQUIREMENTS
JOB 110800__	PEDESTAL TYPE SERVICE POINT ASSEMBLY
JOB 110800__	REACTIVE AGGREGATE TESTING
JOB 110800__	ROLLER COMPACTED CONCRETE PAVEMENT
JOB 110800__	SANITARY SEWER FACILITIES
JOB 110800__	SANITARY SEWER GRINDER
JOB 110800__	SANITARY SEWER GRINDER PUMP STATION
JOB 110800__	SHORING FOR CULVERTS
JOB 110800__	SOIL STABILIZATION
JOB 110800__	STEEL PIPE BOLLARDS
JOB 110800__	STORM WATER POLLUTION PREVENTION PLAN
JOB 110800__	THERMOPLASTIC PAVEMENT MARKING SYMBOL (WHEELCHAIR)
JOB 110800__	TRASH RECEPTACLES
JOB 110800__	UTILITY ADJUSTMENTS
JOB 110800__	VALUE ENGINEERING
JOB 110800__	WATER DISTRIBUTION FACILITIES

GENERAL NOTES

1. ALL PIPE LINES, POWER, TELEPHONE, AND TELEGRAPH LINES TO BE MOVED OR LOWERED BY THE RESPECTIVE OWNERS AS PER AGREEMENT WITH SUCH OWNERS.

2. ANY EQUIPMENT OR APPURTENANCE THAT INTERFERES WITH THE PROPOSED CONSTRUCTION AND WHICH MAY BE THE PROPERTY OF UTILITY SERVICE ORGANIZATIONS SHALL BE MOVED BY THE OWNERS UNLESS OTHERWISE PROVIDED.

3. ALL LAND MONUMENTS LOCATED WITHIN THE CONSTRUCTION AREA SHALL BE PROTECTED IN ACCORDANCE WITH SECTION 107.12 OF THE STANDARD SPECIFICATIONS.

4. ALL TREES THAT DO NOT DIRECTLY INTERFERE WITH THE PROPOSED CONSTRUCTION SHALL BE SPARED AS DIRECTED BY THE ENGINEER. CARE AND DISCRETION SHALL BE USED TO INSURE THAT ALL TREES NOT TO BE REMOVED SHALL BE HARMED AS LITTLE AS POSSIBLE DURING THE CONSTRUCTION OPERATIONS.

5. THE SEQUENCE AS SHOWN ON THE MAINTENANCE OF TRAFFIC PLANS IS A GENERAL OUTLINE FOR THE CONSTRUCTION OF THIS PROJECT, AND IN NO WAY IS IT INTENDED TO COVER EVERY ITEM IN THE PROJECT. ITEMS NOT CRITICAL TO THE CONSTRUCTION SEQUENCE MAY BE CONSTRUCTED IN ANY STAGE AS APPROVED BY THE RESIDENT ENGINEER.

6. ALL FLEXIBLE BASE AND ASPHALTIC PAVEMENTS REMOVED SHALL BE PAID FOR UNDER THE ITEM NO. 210 - UNCLASSIFIED EXCAVATION.

7. THE EXISTING ASPHALT PAVEMENT TO BE REMOVED FROM THE REMAINING PAVEMENT SHALL BE SEPARATED BY SAWING ALONG A NEAT LINE. AFTER SAWING, THE PAVEMENT TO BE REMOVED SHALL BE CAREFULLY REMOVED IN A MANNER THAT WILL NOT DAMAGE THE PAVEMENT THAT IS TO REMAIN. ANY DAMAGE OF THE ASPHALT PAVEMENT THAT IS TO REMAIN IN PLACE SHALL BE REPAIRED AT THE CONTRACTOR'S EXPENSE.

8. ASPHALT DEBRIS RESULTING FROM THE PREPARATORY WORK SHALL BE REMOVED FROM THE PROJECT. THIS MATERIAL SHALL NOT BE BURIED WITHIN THE RIGHT OF WAY.

31944 - CS.dgn 12/17/2021

DATE REVISED	DATE FILMED	DATE REVISED	DATE FILMED	FED.RD. DIST.NO.	STATE	FED. AID PROJ. NO.	SHEET NO.	TOTAL SHEETS
09-16-21				6	ARK.			
11-19-21				JOB NO.		110800	4	49
12-17-21								

(2) SPECIAL DETAILS

STATE OF ARKANSAS REGISTERED PROFESSIONAL ENGINEER No. 10479 BRENT L. MASSEY
12/17/2021

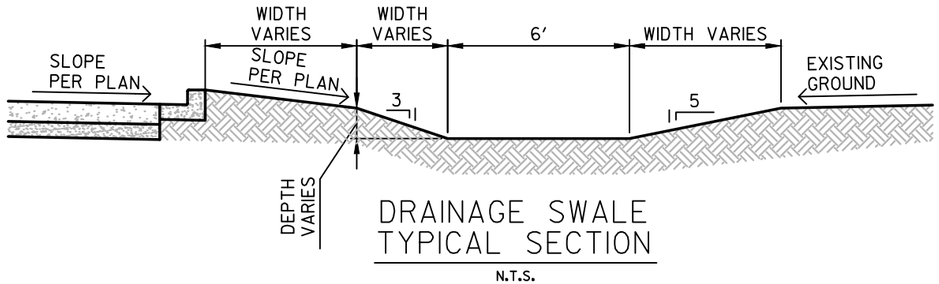

DRAINAGE SWALE TYPICAL SECTION

N.T.S.

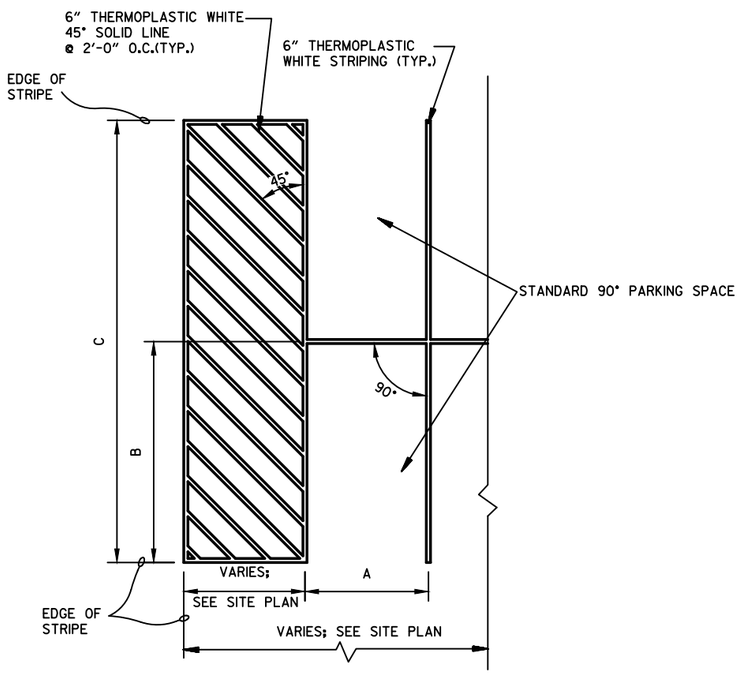

NOTE: ALL DIMENSIONS ARE TO ℄ OF STRIPE UNLESS OTHERWISE INDICATED

DIMENSION CHART									
A	9'	9.5'	10'	9'	9.5'	10'	9'	9.5'	10'
B	18'	18'	18'	19'	19'	19'	20'	20'	20'
C	36'	36'	36'	38'	38'	38'	40'	40'	40'

NOTE: SEE SITE PLAN FOR TOTAL LAYOUT

90° PARKING SPACE STRIPING

N.T.S.

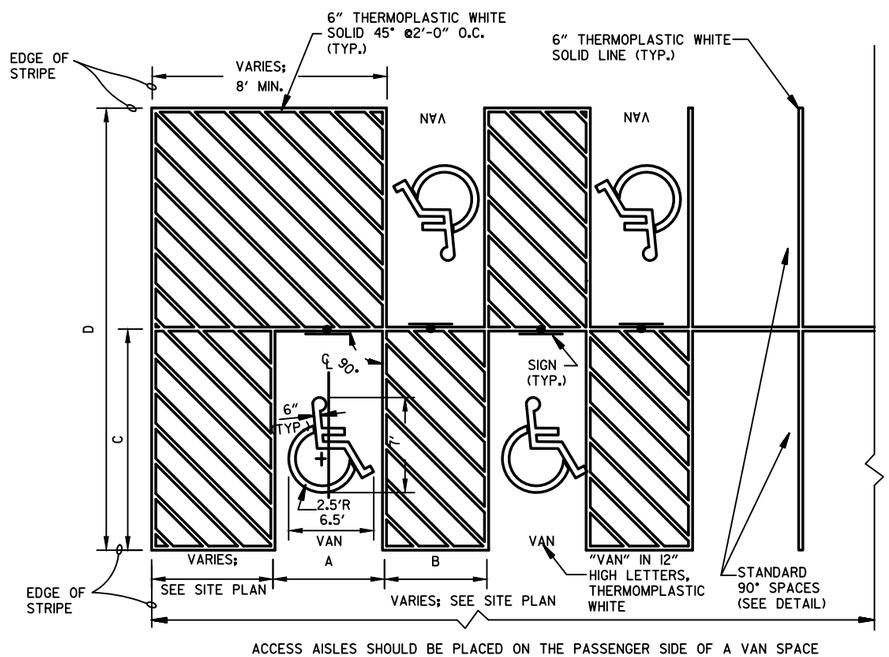

ACCESS AISLES SHOULD BE PLACED ON THE PASSENGER SIDE OF A VAN SPACE

DIMENSION CHART			
A	8'	8'	8'
B	8'	8'	8'
C	18'	19'	20'
D	36'	38'	40'

NOTE: SEE SITE PLAN FOR TOTAL LAYOUT

NOTE: ALL DIMENSIONS ARE TO ℄ OF STRIPE UNLESS OTHERWISE INDICATED

90° VAN ACCESSIBLE PARKING SPACE STRIPING

N.T.S.

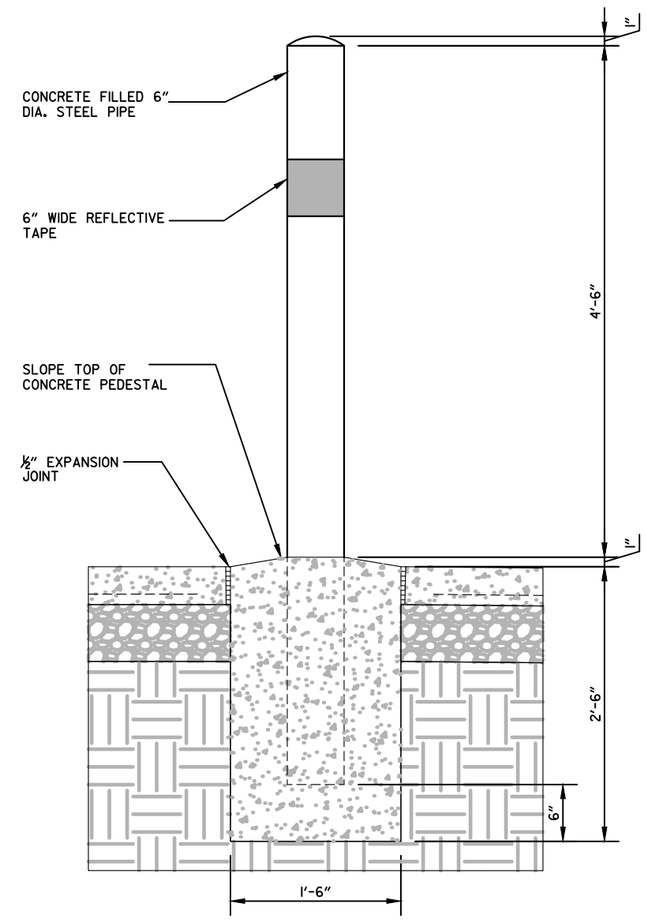

PIPE BOLLARD DETAIL

SCALE : ¾" = 1'-0"

SPECIAL DETAILS

12/17/2021

31944 - DET.dgn

DATE REVISED	DATE FILMED	DATE REVISED	DATE FILMED	FED.RD. DIST.NO.	STATE	FED. AID PROJ. NO.	SHEET NO.	TOTAL SHEETS
06-04-21		11-19-21		6	ARK.			
06-23-21		12-17-21		JOB NO.		110800	5	49
09-16-21								

(2) SPECIAL DETAILS

STATE OF ARKANSAS REGISTERED PROFESSIONAL ENGINEER No. 10479 BRENT L. MASSEY 12/17/2021

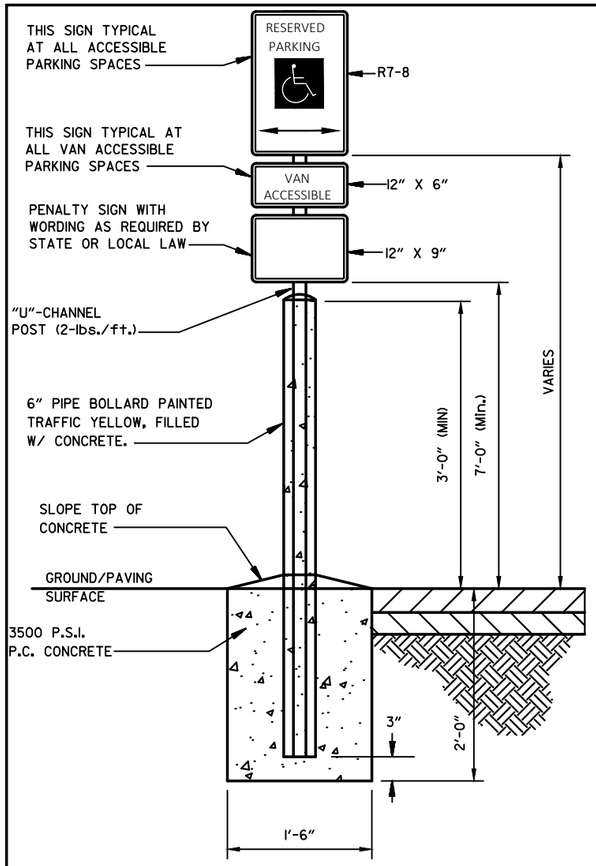

ACCESSIBLE / VAN ACCESSIBLE PARKING SIGN

N.T.S.

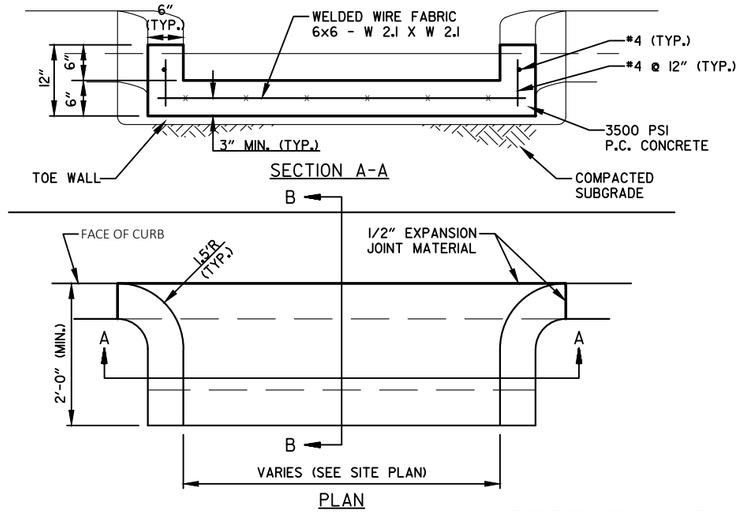

CONCRETE FLUME

N.T.S.

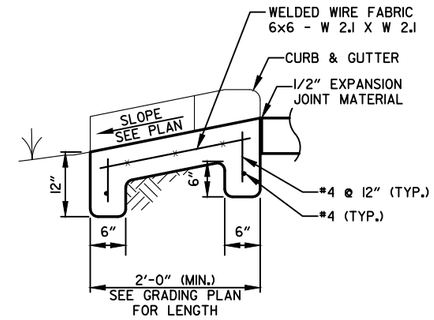

SECTION B-B

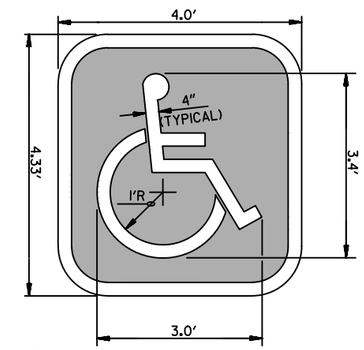

NOTES:

LOCATE AT EDGE OF PARKING SPACE UNLESS ACCOMPANIED BY "VAN" LETTERING. WHERE INDICATED "VAN" LETTERING SHALL BE WHITE 12" HIGH LETTERING CENTERED ON THE STALL. ALL STRIPING SHALL BE WHITE. THE INSIDE AREA OF THE SYMBOL SHALL BE BLUE.

ACCESSIBLE PARKING SYMBOL

N.T.S.

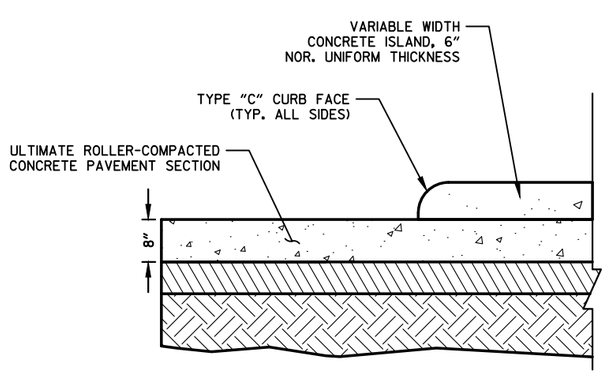

CONCRETE ISLAND

N.T.S.

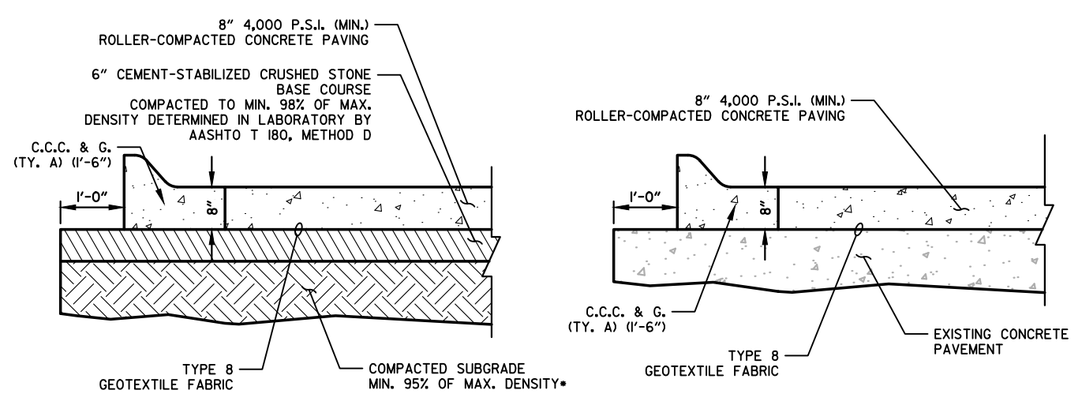

FULL-DEPTH NEW PAVEMENT

*MAXIMUM LABORATORY DENSITY SHALL BE DETERMINED AS FOLLOWS:

% RETAINED ON #4 SIEVE	TEST METHOD
10 MAX.	AASHTO T 99, METHOD A
11-30	AASHTO T 99, METHOD C
31 MIN.	AASHTO T 180, METHOD D

OVERLAY OF EXISTING PAVEMENT

ROLLER-COMPACTED CONCRETE PAVING

N.T.S.

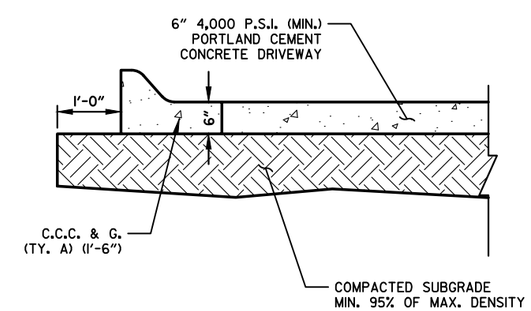

PORTLAND CEMENT CONCRETE DRIVEWAY

N.T.S.

SPECIAL DETAILS

12/17/2021

3944 - DET.dgn

DATE REVISED	DATE FILMED	DATE REVISED	DATE FILMED	FED.RD. DIST.NO.	STATE	FED. AID PROJ. NO.	SHEET NO.	TOTAL SHEETS
09-16-21				6	ARK.			
11-19-21				JOB NO.		110800	6	49
12-17-21								

(2) SPECIAL DETAILS

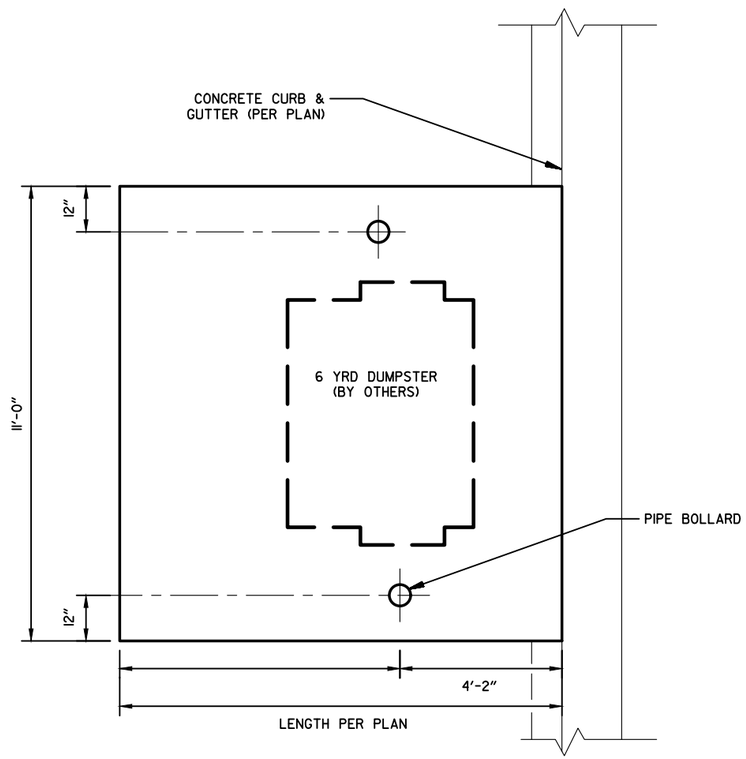

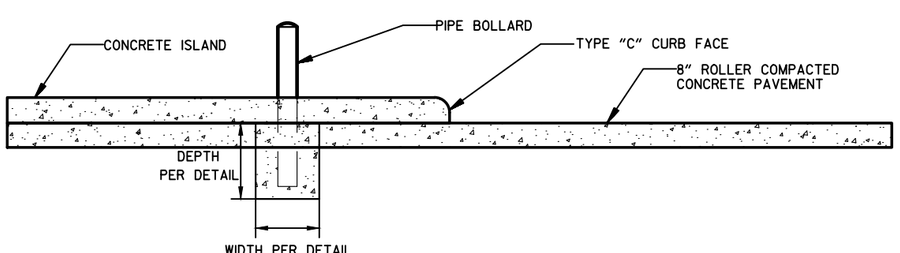

DUMPSTER PAD

N.T.S.

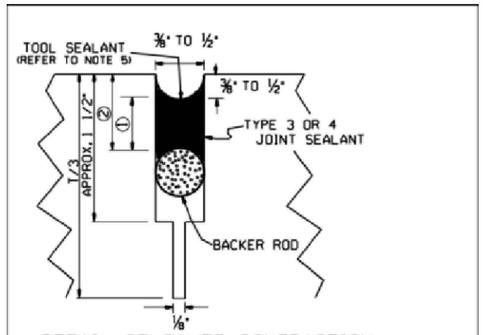

DETAIL OF SAWED CONTRACTION JOINT

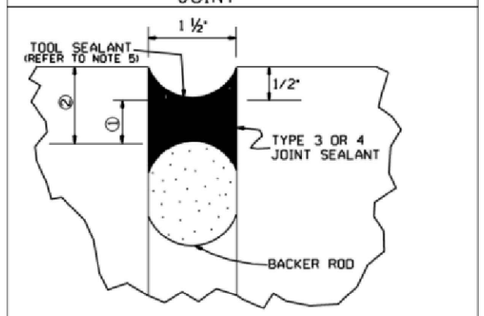

DETAIL OF EXPANSION JOINT

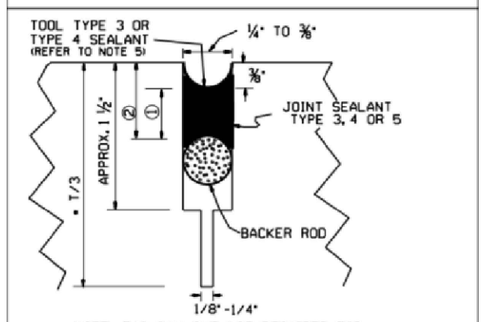

*NOTE: T/3 SAW CUT NOT REQUIRED FOR LONGITUDINAL CONSTRUCTION JOINT.

DETAIL OF SAWED LONGITUDINAL JOINT AND LONGITUDINAL CONSTRUCTION JOINT

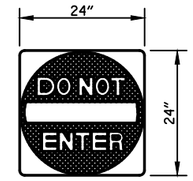

STANDARD RED AND WHITE SIGN

"DO NOT ENTER" SIGN

N.T.S.

STATE OF ARKANSAS REGISTERED PROFESSIONAL ENGINEER No. 10479 BRENT L. MASSEY 12/17/2021

JOINT CONFIGURATION FOR TYPE 3 OR 4 JOINT SEALANT			
JOINT WIDTH	SEALANT THICKNESS	BACKER ROD DIAMETER	BACKER ROD PLACEMENT DEPTH
INCHES			
1/4	1/4	3/8	1/2
3/8	1/4	1/2	1/2
1/2	1/4	5/8	1/2
5/8	5/16	3/4	9/16
3/4	3/8	7/8	7/8
1 1/2	3/4	2	1 1/4

JOINT CONFIGURATION FOR TYPE 3 OR 4 JOINT SEALANT			
JOINT WIDTH	SEALANT THICKNESS	BACKER ROD DIAMETER	BACKER ROD PLACEMENT DEPTH
INCHES			
1/4	1/2	3/8	3/4
3/8	3/4	1/2	1

GENERAL NOTES

1. THE EXPANSION JOINT SUPPORT MAY BE CONSTRUCTED WITH CLASS "A", "S" OR PAVING CONCRETE. PAYMENT FOR THE JOINT SUPPORT SHALL BE FOR THE CONTRACT UNIT PRICE BID FOR THE CLASS OF CONCRETE SPECIFIED IN THE PLANS. PAYMENT FOR ALL OTHER WORK AND MATERIALS REQUIRED FOR THE CONSTRUCTION OF THE JOINT SUPPORT SHALL BE INCLUDED IN THE PRICE BID FOR THE ABOVE ITEMS.
2. CONTRACTION JOINTS SHALL BE CONSTRUCTED ON 15' CENTERS.
3. TOOLING NOT REQUIRED FOR SELF-LEVELING SILICONE.

DATE REVISED	DATE FILMED	DATE REVISED	DATE FILMED	FED.RD. DIST.NO.	STATE	FED. AID PROJ. NO.	SHEET NO.	TOTAL SHEETS
05-06-21		12-17-21		6	ARK.			
09-16-21				JOB NO.		110800	7	49
11-19-21								

(2) SPECIAL DETAILS

STATE OF ARKANSAS REGISTERED PROFESSIONAL ENGINEER No. 10479 BRENT L. MASSEY 12/17/2021

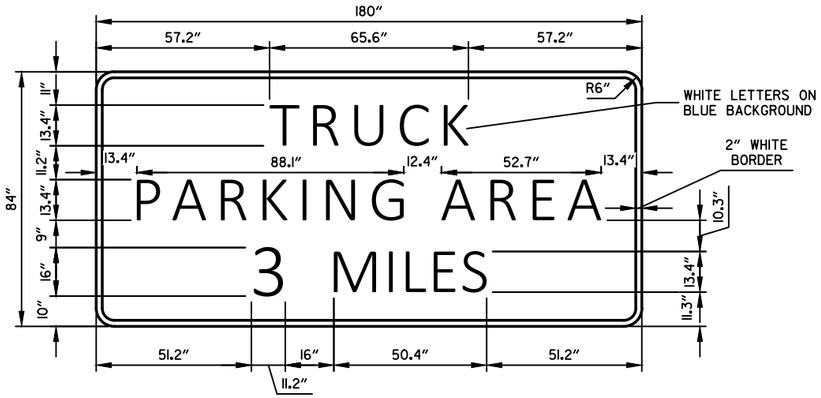

ML55-TP275-3SB

N.T.S.

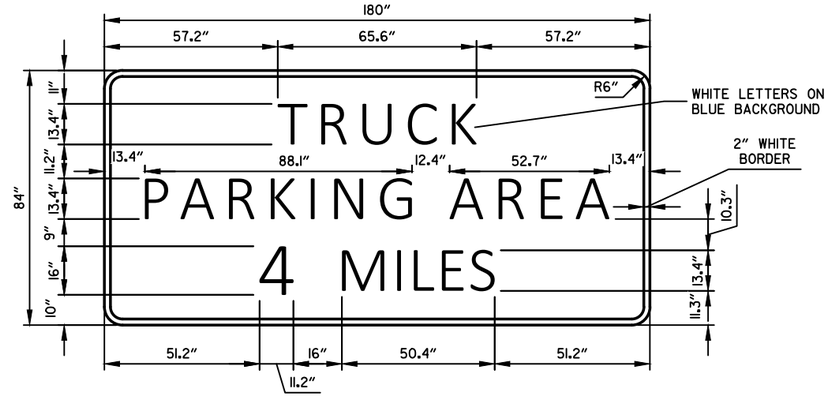

ML40-TP275-4WB

N.T.S.

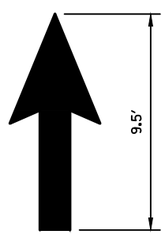

THROUGH LANE-USE ARROW

NOTES:
1. ARROWS FOR ROADS AND DRIVEWAYS SHALL BE APPLIED ACCORDING TO REQUIREMENTS AS OUTLINED IN SECTION 3B-20 OF THE MANUAL ON UNIFORM TRAFFIC CONTROL DEVICES FOR STREETS AND HIGHWAYS
2. THE ARROWS ARE TO BE PAINTED THERMOPLASTIC WHITE.

THROUGH LANE USE ARROW PAVEMENT MARKING

N.T.S.

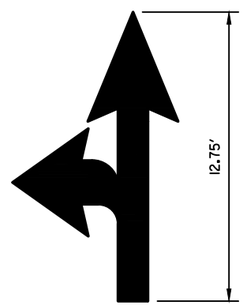

LEFT TURN AND THROUGH LANE-USE ARROW

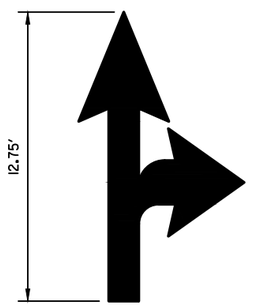

RIGHT TURN AND THROUGH LANE-USE ARROW

NOTES:
1. ARROWS FOR ROADS AND DRIVEWAYS SHALL BE APPLIED ACCORDING TO REQUIREMENTS AS OUTLINED IN SECTION 3B-20 OF THE MANUAL ON UNIFORM TRAFFIC CONTROL DEVICES FOR STREETS AND HIGHWAYS
2. THE ARROWS ARE TO BE PAINTED THERMOPLASTIC WHITE.

TURN AND THROUGH LANE USE ARROW PAVEMENT MARKING

N.T.S.

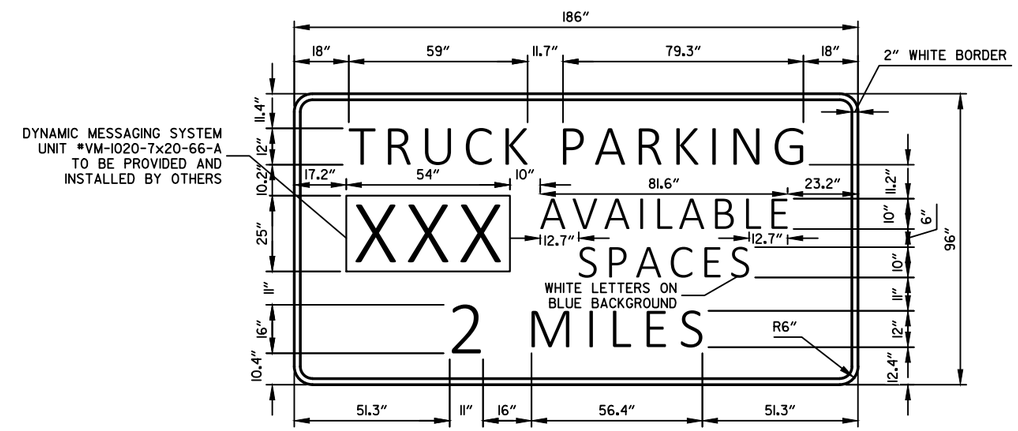

ML40-TP275-2WB

N.T.S.

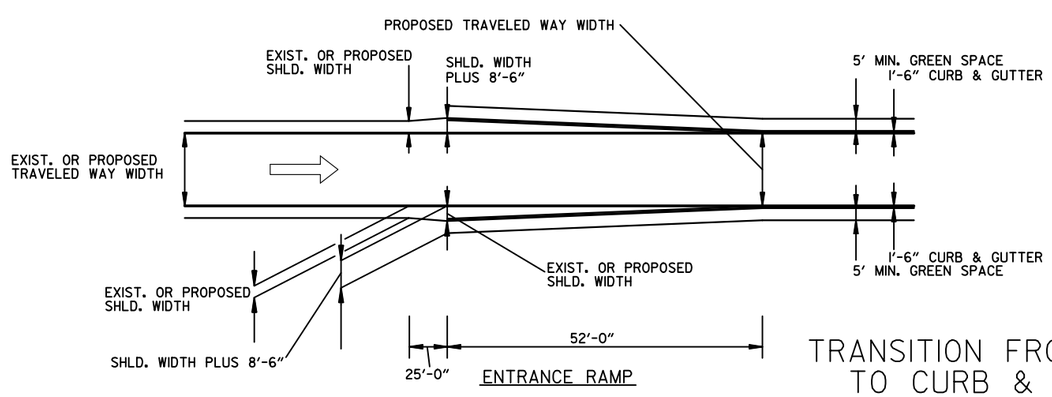

ENTRANCE RAMP

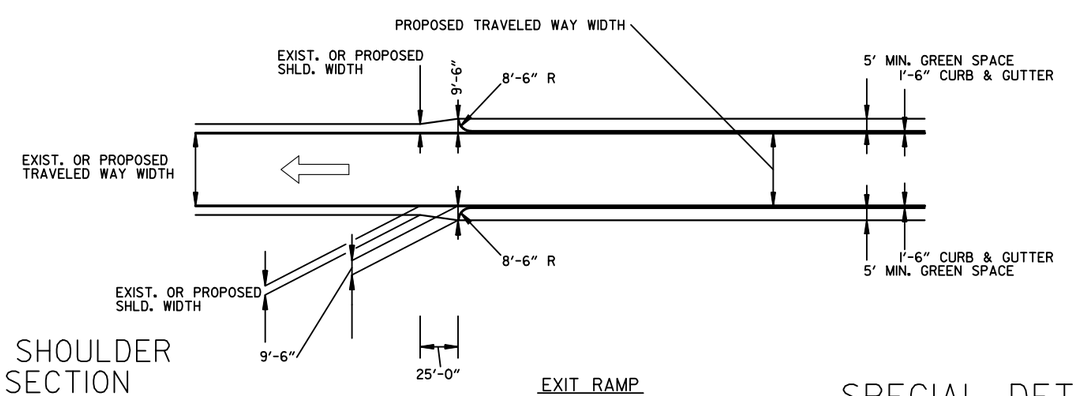

EXIT RAMP

TRANSITION FROM OPEN SHOULDER TO CURB & GUTTER SECTION

N.T.S.

SPECIAL DETAILS

12/17/2021

31944 - DET.dgn

DATE REVISED	DATE FILMED	DATE REVISED	DATE FILMED	FED.RD. DIST.NO.	STATE	FED. AID PROJ. NO.	SHEET NO.	TOTAL SHEETS
09-16-21				6	ARK.			
11-19-21				JOB NO.		110800	8	49
12-17-21								

(2) SPECIAL DETAILS

STATE OF ARKANSAS REGISTERED PROFESSIONAL ENGINEER No. 10479 BRENT L. MASSEY 12/17/2021

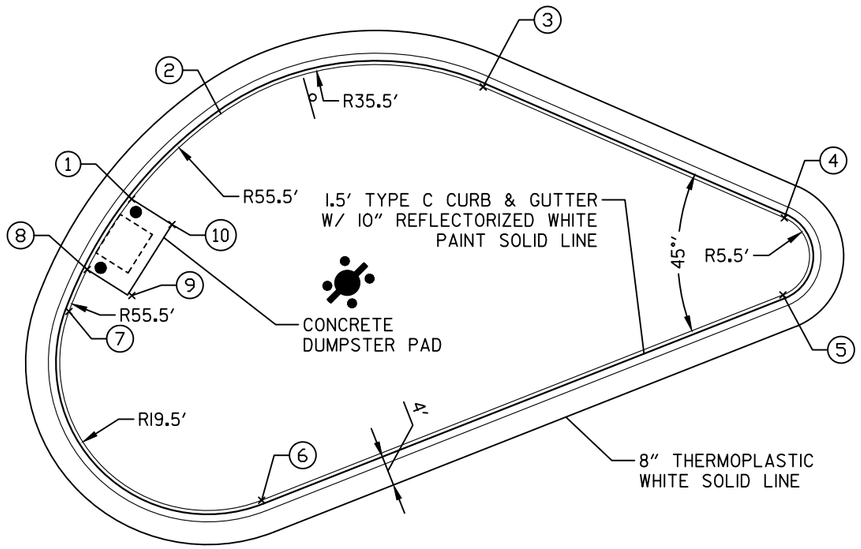

CURB ISLAND 2 DETAIL

CURB ISLAND 2 POINT TABLE		
POINT	N	E
1	304110.1350	1837847.7832
2	304121.3737	1837859.5642
3	304124.9259	1837894.1917
4	304107.6450	1837933.9326
5	304097.4839	1837933.7550
6	304070.3841	1837864.9534
7	304095.2964	1837839.5196
8	304100.8297	1837841.9170
9	304097.3945	1837847.8256
10	304106.7711	1837853.1193

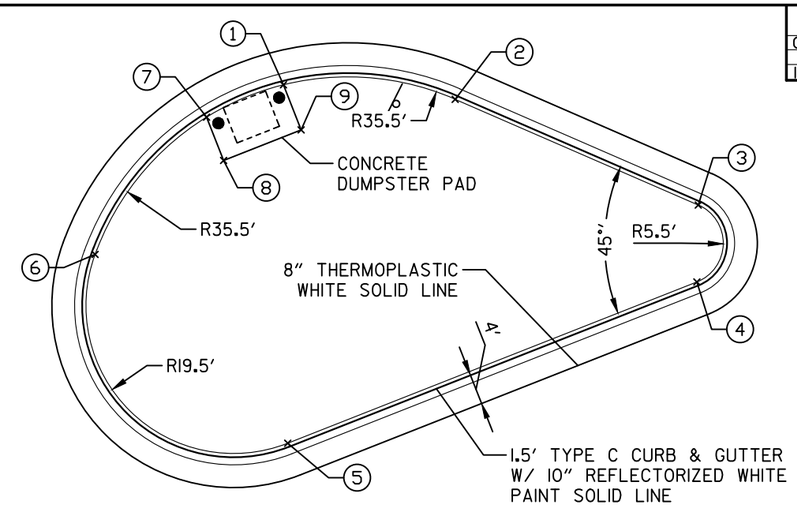

CURB ISLAND 7 DETAIL

CURB ISLAND 7 POINT TABLE		
POINT	N	E
1	304302.3426	1837801.1379
2	304300.4347	1837823.8110
3	304286.4852	1837855.8905
4	304276.3241	1837855.7129
5	304255.0516	1837801.7059
6	304279.9639	1837776.2721
7	304298.0795	1837790.9945
8	304292.3658	1837793.2450
9	304296.3971	1837803.4797

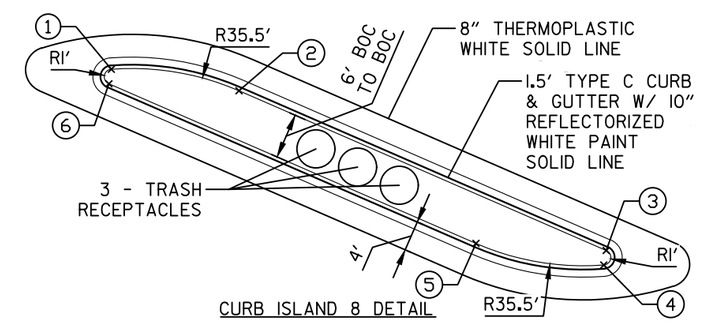

CURB ISLAND 8 DETAIL

CURB ISLAND 8 POINT TABLE		
POINT	N	E
1	304407.9944	1838055.1381
2	304405.1525	1838071.9950
3	304384.0814	1838120.4522
4	304382.1673	1838120.1295
5	304385.0091	1838103.2726
6	304406.0802	1838054.8154

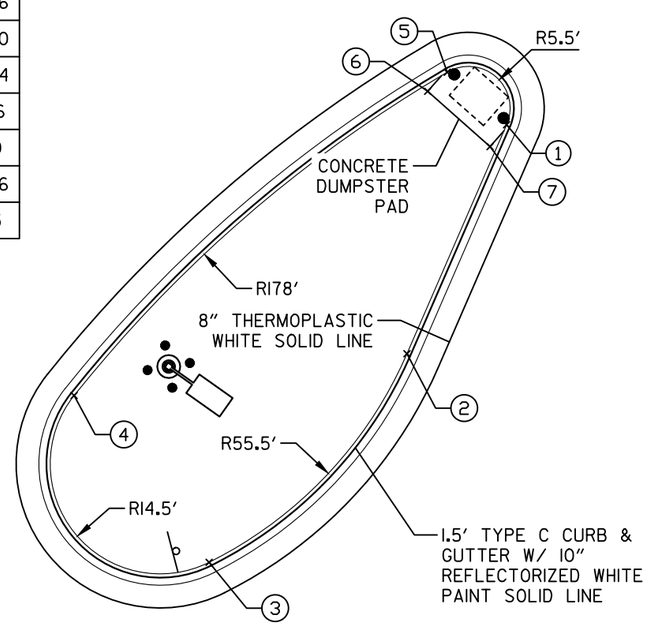

CURB ISLAND 9 DETAIL

CURB ISLAND 9 POINT TABLE		
POINT	N	E
1	304433.2805	1837887.0536
2	304403.0691	1837873.9164
3	304375.5414	1837847.8030
4	304397.5509	1837829.9875
5	304440.2193	1837879.2297
6	304437.7089	1837876.6407
7	304430.4101	1837884.8704

CURB ISLANDS SPECIAL DETAILS

DATE REVISED	DATE FILMED	DATE REVISED	DATE FILMED	FED.RD. DIST.NO.	STATE	FED. AID PROJ. NO.	SHEET NO.	TOTAL SHEETS
06-04-21		12-17-21		6	ARK.			
09-16-21				JOB NO.		110800	9	49
11-19-21								

(2) SPECIAL DETAILS

STATE OF ARKANSAS REGISTERED PROFESSIONAL ENGINEER No. 10479 BRENT L. MASSEY 12/17/2021

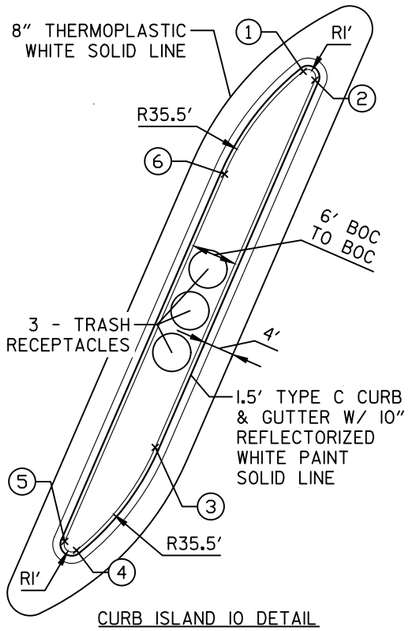

CURB ISLAND 10 DETAIL

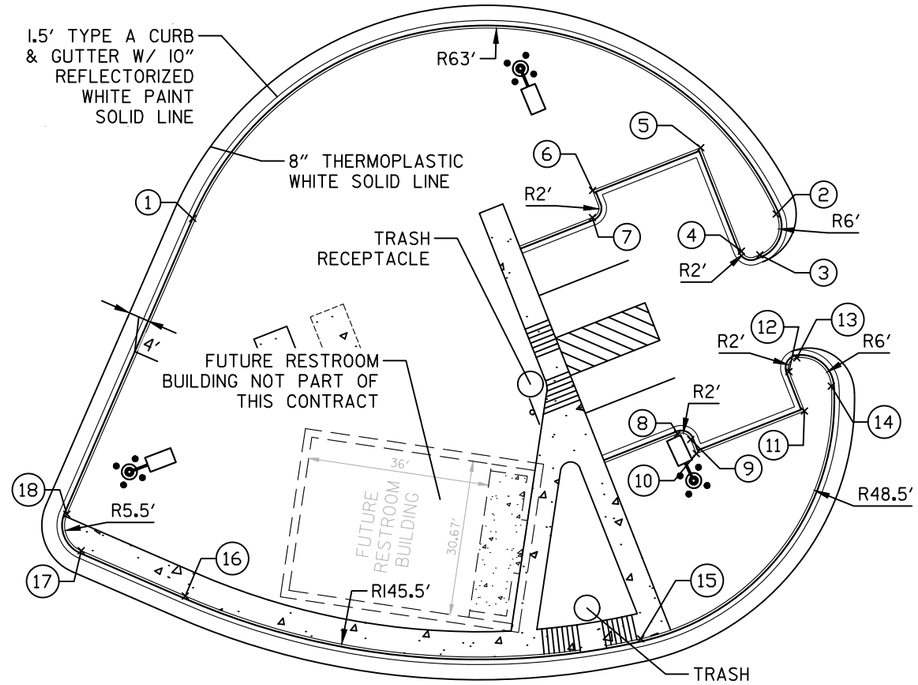

BUILDING DETAIL

CURB ISLAND 10 POINT TABLE		
POINT	N	E
1	304538.3996	1838126.9904
2	304537.2197	1838128.5318
3	304488.7625	1838107.4607
4	304475.1882	1838097.0698
5	304476.3681	1838095.5284
6	304524.8253	1838116.5996

BUILDING DETAIL POINT TABLE		
POINT	N	E
1	304532.3338	1838201.1032
2	304533.2166	1838316.6274
3	304525.1383	1838313.3700
4	304525.8518	1838309.7240
5	304546.3211	1838301.6614
6	304537.8921	1838280.2616
7	304532.5070	1838280.2332
8	304489.7074	1838297.0913
9	304488.5795	1838299.6851
10	304485.7883	1838300.7845
11	304494.2173	1838322.1843
12	304502.0225	1838319.1100
13	304504.7362	1838320.6939
14	304499.1286	1838327.5153
15	304449.1207	1838289.8008
16	304457.5979	1838199.6497
17	304466.5581	1838179.0440
18	304473.7951	1838176.1935

CURB ISLANDS AND BUILDING DETAIL
SPECIAL DETAILS

DATE REVISED	DATE FILMED	DATE REVISED	DATE FILMED	FED.RD. DIST.NO.	STATE	FED. AID PROJ. NO.	SHEET NO.	TOTAL SHEETS
09-16-21				6	ARK.			
11-19-21				JOB NO.		110800	10	49
12-17-21								

(2) SPECIAL DETAILS

STATE OF ARKANSAS REGISTERED PROFESSIONAL ENGINEER No. 10479 BRENT L. MASSEY 12/17/2021

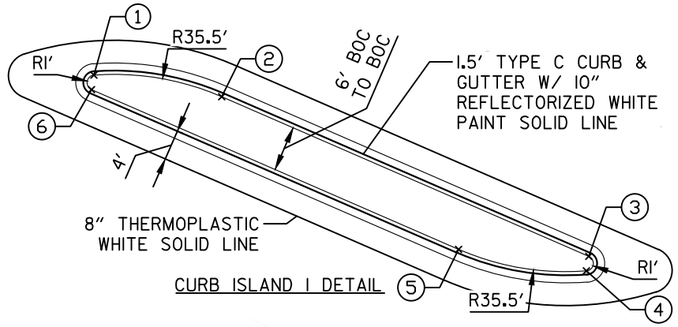

CURB ISLAND 1 DETAIL

CURB ISLAND 1 POINT TABLE		
POINT	N	E
1	304221.3800	1838113.4428
2	304218.5382	1838130.2998
3	304197.4670	1838178.7570
4	304195.5529	1838178.4343
5	304198.3947	1838161.5773
6	304219.4658	1838113.1201

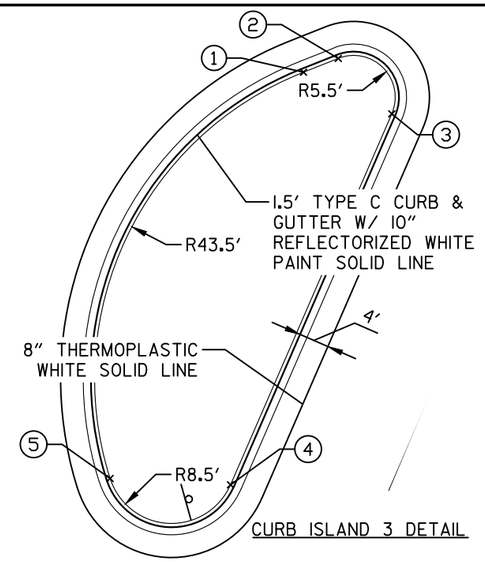

CURB ISLAND 3 DETAIL

CURB ISLAND 3 POINT TABLE		
POINT	N	E
1	304225.8018	1837847.5070
2	304227.6111	1837852.1007
3	304220.3006	1837859.1601
4	304171.3627	1837837.8800
5	304172.1838	1837821.9824

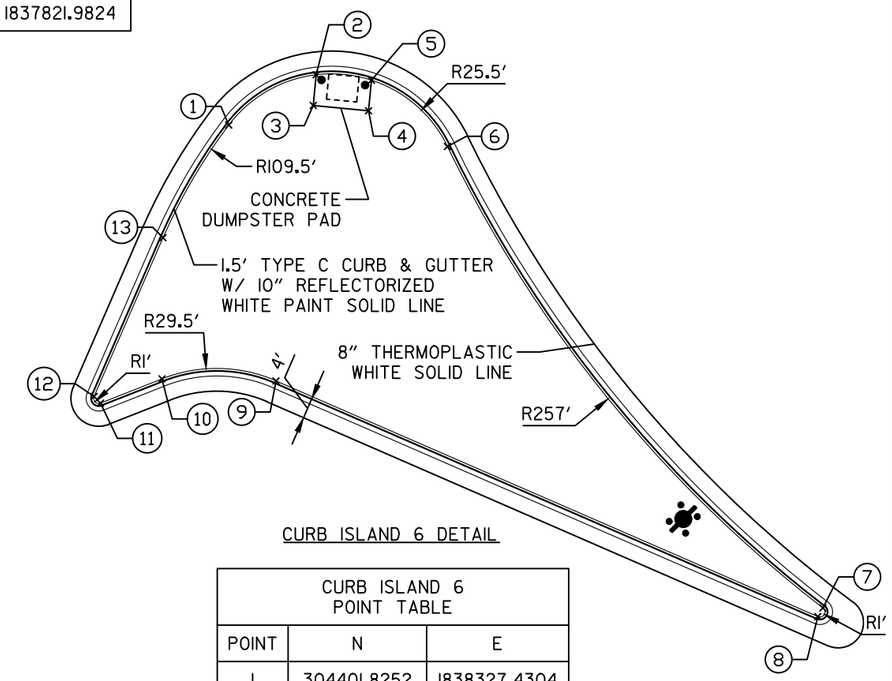

CURB ISLAND 6 DETAIL

CURB ISLAND 6 POINT TABLE		
POINT	N	E
1	304401.8252	1838327.4304
2	304411.7840	1838344.7351
3	304405.7136	1838344.1570
4	304404.6707	1838355.1075
5	304410.7139	1838355.6830
6	304397.5955	1838370.7305
7	304306.2643	1838445.0687
8	304304.5551	1838444.0597
9	304351.1985	1838336.7940
10	304351.5930	1838314.2191
11	304346.7999	1838302.0503
12	304348.1291	1838300.7667
13	304379.5416	1838314.4261

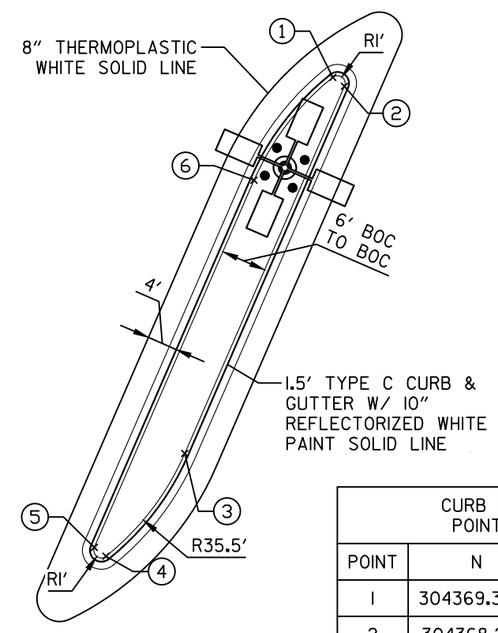

CURB ISLAND 5 DETAIL

CURB ISLAND 5 POINT TABLE		
POINT	N	E
1	304369.3929	1838216.3589
2	304368.2130	1838217.9003
3	304319.7558	1838196.8292
4	304306.1815	1838186.4383
5	304307.3614	1838184.8969
6	304355.8186	1838205.9680

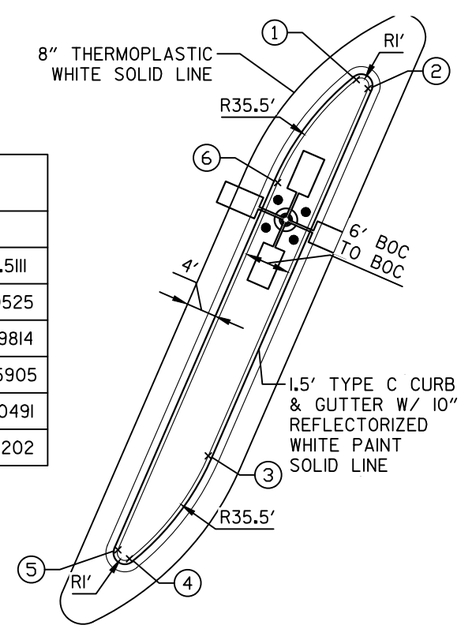

CURB ISLAND 4 DETAIL

CURB ISLAND 4 POINT TABLE		
POINT	N	E
1	304276.1024	1837979.5111
2	304274.9224	1837981.0525
3	304226.4653	1837959.9814
4	304212.8910	1837949.5905
5	304214.0709	1837948.0491
6	304262.5281	1837969.1202

CURB ISLANDS SPECIAL DETAILS

12/17/2021

31944 - DET.dgn

DATE REVISED	DATE FILMED	DATE REVISED	DATE FILMED	FED.RD. DIST.NO.	STATE	FED. AID PROJ. NO.	SHEET NO.	TOTAL SHEETS
06-04-21		12-17-21		6	ARK.			
09-16-21				JOB NO.		110800	11	49
11-19-21								

(2) SPECIAL DETAILS

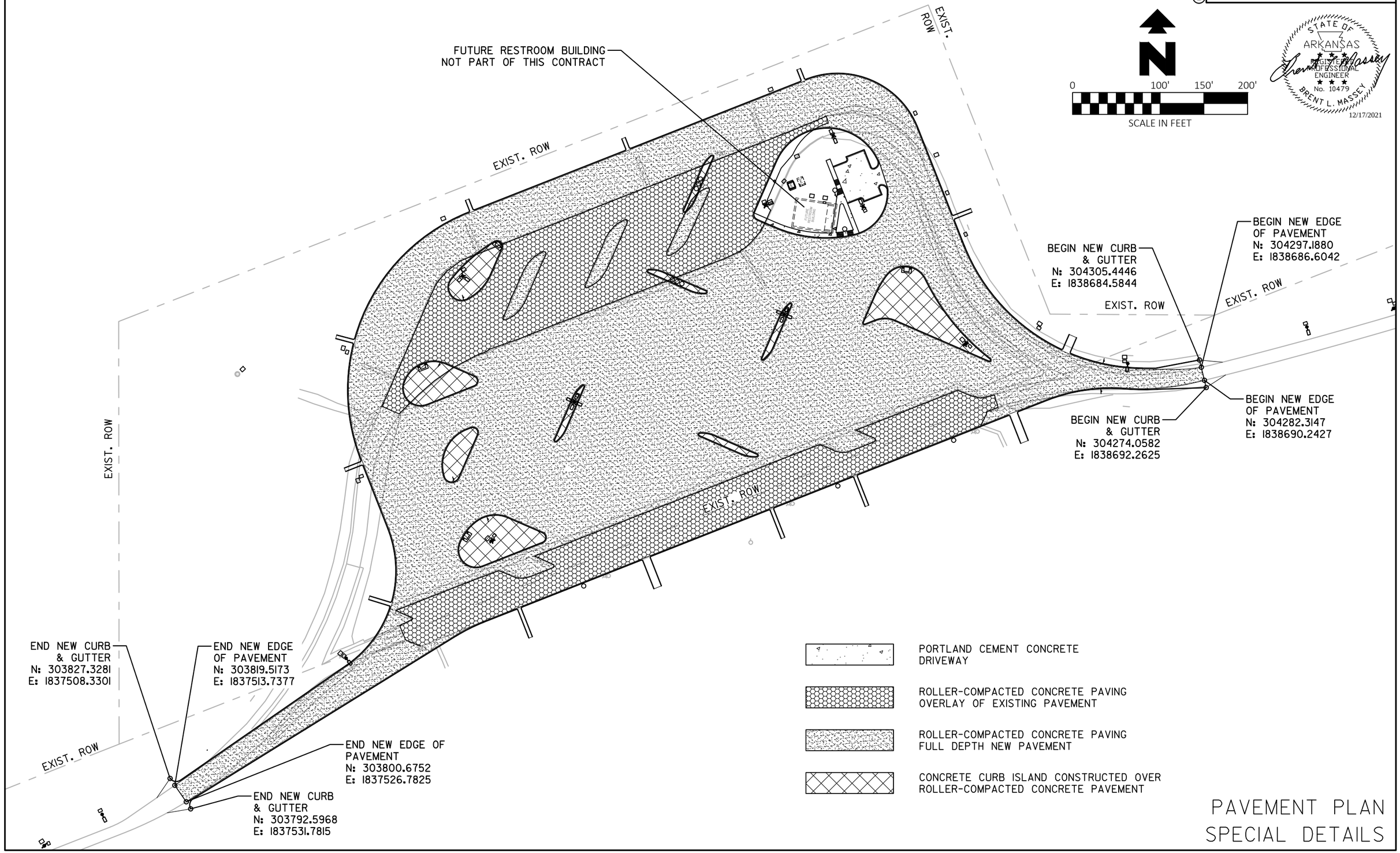

PAVEMENT PLAN SPECIAL DETAILS

12/15/2021

31944 - SP.dgn

DATE REVISED	DATE FILMED	DATE REVISED	DATE FILMED	FED.RD. DIST.NO.	STATE	FED. AID PROJ. NO.	SHEET NO.	TOTAL SHEETS
05-06-21		12-17-21		6	ARK.			
09-16-21				JOB NO.		110800	12	49
11-19-21								

(2) SPECIAL DETAILS

STATE OF ARKANSAS REGISTERED PROFESSIONAL ENGINEER No. 10479 BRENT L. MASSEY
12/17/2021

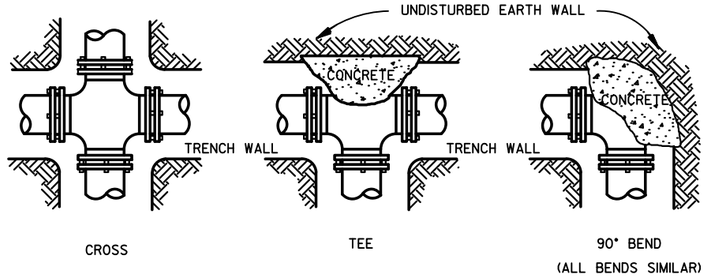

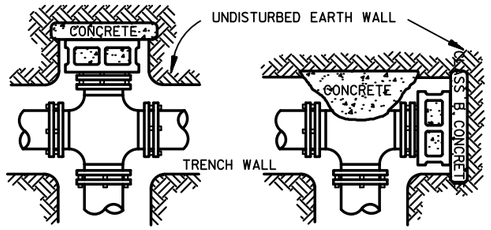

HORIZONTAL FITTINGS

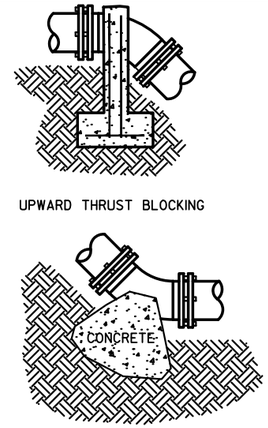

VERTICAL FITTINGS

HORIZONTAL THRUST BLOCKING TABLE

SIZE	REQUIRED SQ. FT. OF UNDISTURBED EARTHWALL FOR REACTION BACKING — TYPE OF FITTINGS: TEE	90°	45°	22 1/2°	11 1/4°
2"	1	1	1	1	1
3"	1	1	1	1	1
4"	1	1	1	1	1
6"	1.5	2	1	1	1
8"	2.5	3.5	1.8	1	1
10"	4	5.5	2.8	1.5	1
12"	6	8	4	2	1.5
14"	8	11	5.5	3	2
16"	10	14.2	7	4	3
18"	21	21	12	6	4
20"	26	26	14	7	5
24"	38	38	20	10	7
30"	59	59	32	16	9
36"	85	85	46	23	12

MINIMUM CONCRETE VOLUMES FOR UPWARD THRUST BLOCKING

PIPE SIZE Inches	11.25 DEGREE BEND — ANCHOR STRAPS NO.	SIZE	Concrete VOLUME cu.yd.	22.5 DEGREE BEND — ANCHOR STRAPS NO.	SIZE	Concrete VOLUME cu.yd.	45 DEGREE BEND — ANCHOR STRAPS NO.	SIZE	Concrete VOLUME cu.yd.	90 DEGREE BEND — ANCHOR STRAPS NO.	SIZE	Concrete VOLUME cu.yd.
2.0	1	#4 DIAM.	0.04	1	#4 DIAM.	0.08	1	#4 DIAM.	0.16	1	#4 DIAM.	0.30
3.0	1	#4 DIAM.	0.09	1	#4 DIAM.	0.18	1	#4 DIAM.	0.36	1	#4 DIAM.	0.67
4.0	1	#4 DIAM.	0.16	1	#4 DIAM.	0.33	1	#4 DIAM.	0.64	1	#4 DIAM.	1.19
6.0	1	#4 DIAM.	0.37	1	#4 DIAM.	0.74	1	#4 DIAM.	1.44	1	#4 DIAM.	2.67
8.0	1	#4 DIAM.	0.66	1	#4 DIAM.	1.31	1	#4 DIAM.	2.57	2	#4 DIAM.	4.74
10.0	1	#4 DIAM.	1.03	1	#4 DIAM.	2.04	2	#4 DIAM.	4.01	2	#4 DIAM.	7.40
12.0	1	#4 DIAM.	1.48	1	#4 DIAM.	2.94	2	#4 DIAM.	5.77	2	#5 DIAM.	10.65
14.0	1	#4 DIAM.	2.01	2	#4 DIAM.	4.01	2	#4 DIAM.	7.86	2	#6 DIAM.	14.52
16.0	1	#4 DIAM.	2.63	2	#4 DIAM.	5.23	2	#5 DIAM.	10.26	3	#5 DIAM.	18.95

NOTE: 18" AND LARGER REQUIRES SPECIFIC DESIGN

NOTES:
1. DO NOT COVER BELLS OR FLANGES WITH CONCRETE
2. WRAP ALL FITTINGS WITH VISQUEEN.
3. BACK ALL TEES ACCORDING TO SIZE OF BRANCH.
4. BACKING FUTURE LINE EXTENSIONS SHALL BE SUCH THAT LATER REMOVAL IS POSSIBLE.
5. ALL BENDS WHERE FITTINGS ARE USED, BOTH HORIZONTAL OR VERTICAL SHALL BE BACKED.
6. REACTION BACKING TABLE IS BASED ON 100 P.S.I. AND SOIL BEARING PRESSURE OF 2,500 lb./sq.ft. ADDITIONAL BACKING MAY BE REQUIRED IN SOME AREAS AS DIRECTED BY ENGINEERS.
7. ALL CONCRETE SHALL BE 2500 P.S.I.

THRUST BLOCKING

N.T.S.

NOTE:
1. ALL HYDRANTS TO BE SET PLUMB W/ NOZZLE FACING STREET UNLESS OTHERWISE SPECIFIED BY FIRE DEPARTMENT
2. ALL CONCRETE TO BE 2500 PSI P.C. CONCRETE
3. FIRE HYDRANT ASSEMBLY INCLUDES GATE VALVE AND APPURTENANCES

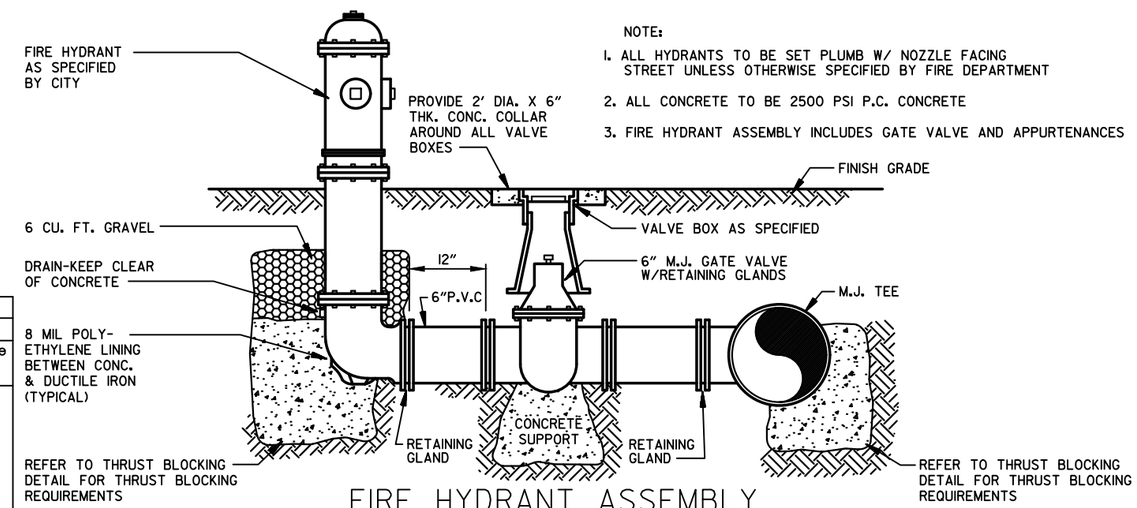

FIRE HYDRANT ASSEMBLY

N.T.S.

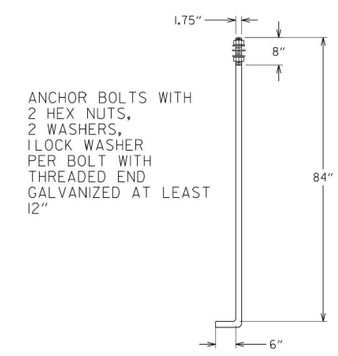

ANCHOR BOLT

N.T.S.

SPECIAL DETAILS

12/17/2021

31944 - DET.dgn

DATE REVISED	DATE FILMED	DATE REVISED	DATE FILMED	FED.RD. DIST.NO.	STATE	FED. AID PROJ. NO.	SHEET NO.	TOTAL SHEETS
05-06-21		11-19-21		6	ARK.			
06-23-21		12-17-21		JOB NO.		110800	13	49
09-16-21								

(2) SPECIAL DETAILS

STATE OF ARKANSAS REGISTERED PROFESSIONAL ENGINEER No. 10479 BRENT L. MASSEY

12/17/2021

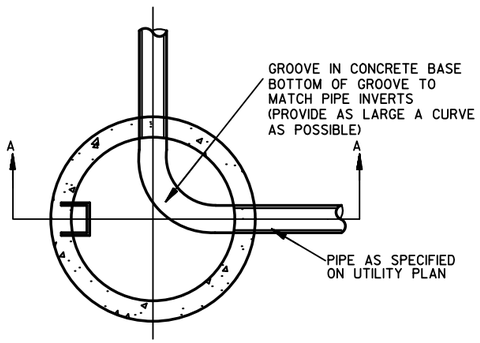

SEC. B-B

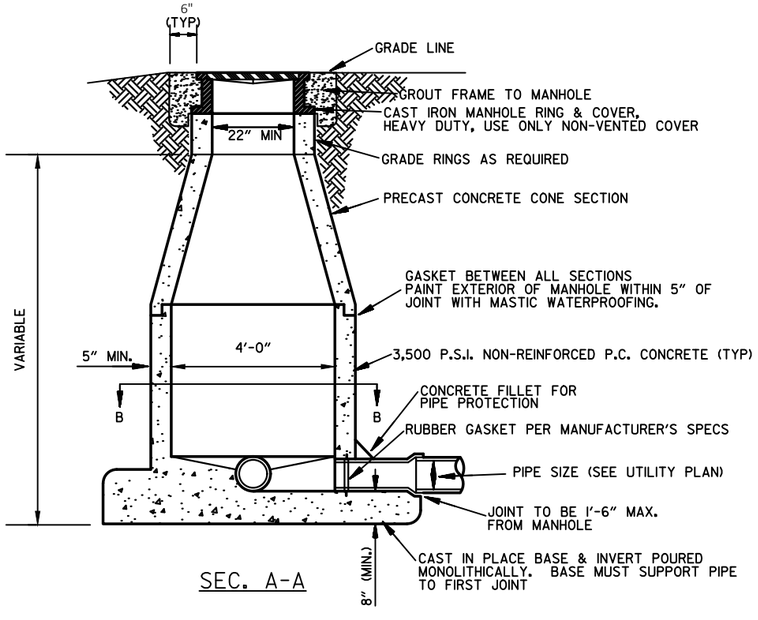

SEC. A-A

SANITARY SEWER MANHOLE (CAST IN PLACE)

N.T.S.

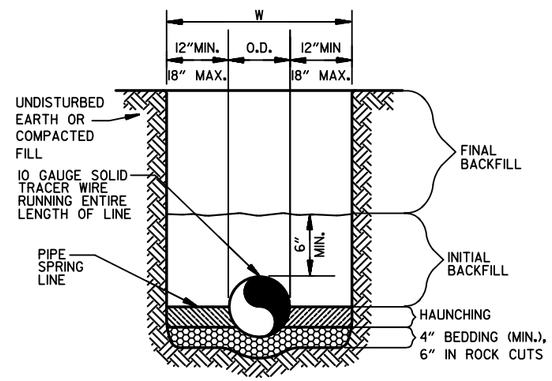

WATER LINE & FORCE MAIN

N.T.S.

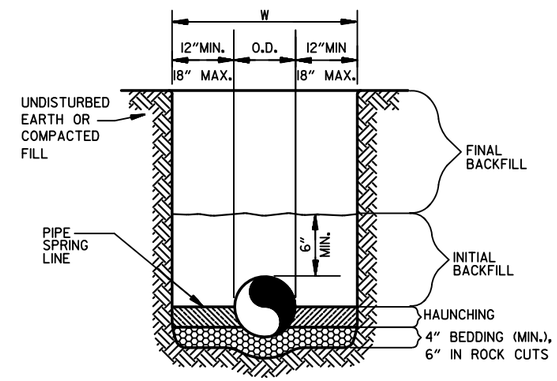

SANITARY SEWER

N.T.S.

GENERAL NOTES

1. BEDDING SHALL BE CLASS I-A WORKED BY HAND. IF GROUNDWATER IS ANTICIPATED, THEN BEDDING SHALL BE CLASS I-B COMPACTED TO 85% STANDARD PROCTOR. (SEE SPECIFICATIONS FOR GRADATION)
2. HAUNCHING SHALL BE WORKED AROUND THE PIPE BY HAND TO ELIMINATE VOIDS AND SHALL BE CLASS I-A OR CLASS I-B OR CLASS II COMPACTED TO 85% PROCTOR.
3. INITIAL BACKFILL SHALL BE CLASS I-A WORKED BY HAND, OR CLASS I-B OR CLASS II COMPACTED TO 85% STANDARD PROCTOR.
4. INITIAL BACKFILL NOT UNDER PAVED AREAS CAN BE CLASS III COMPACTED TO 90% STANDARD PROCTOR.
5. FINAL BACKFILL SHALL BE CLASS I, II, OR III COMPACTED AS NOTED IN NOTES 3. AND 4
6. FINAL BACKFILL NOT UNDER PAVED AREAS CAN BE CLASS IV-A COMPACTED TO 95% STANDARD PROCTOR.
7. ALL MATERIALS ARE CLASSIFIED IN ACCORDANCE WITH ASTM D 2321, LATEST EDITION.
8. ALL MATERIALS SHALL BE INSTALLED IN MAXIMUM 8" LOOSE LIFTS IN ACCORDANCE WITH ASTM D 698. CLASS III AND IV-A MATERIALS SHALL BE COMPACTED NEAR OPTIMUM MOISTURE CONTENT.
9. FILL SALVAGED FROM EXCAVATION SHALL BE FREE OF DEBRIS, ORGANICS AND ROCKS LARGER THAN 3".
10. ALL TRENCH EXCAVATIONS SHALL BE SLOPED, SHORED, SHEETED, BRACED, OR OTHERWISE SUPPORTED IN COMPLIANCE WITH OSHA REGULATIONS AND LOCAL ORDINANCES. (SEE SPECIFICATIONS)

SANITARY SEWER AND WATER LINE TRENCHING AND BEDDING

N.T.S.

DATE REVISED	DATE FILMED	DATE REVISED	DATE FILMED	FED.RD. DIST.NO.	STATE	FED. AID PROJ. NO.	SHEET NO.	TOTAL SHEETS
09-16-21				6	ARK.			
11-19-21				JOB NO.		110800	14	49
12-17-21								

(2) TEMPORARY EROSION CONTROL DETAILS

N

0 100' 150' 200'

SCALE IN FEET

STATE OF ARKANSAS REGISTERED PROFESSIONAL ENGINEER No. 10479 BRENT L. MASSEY

12/17/2021

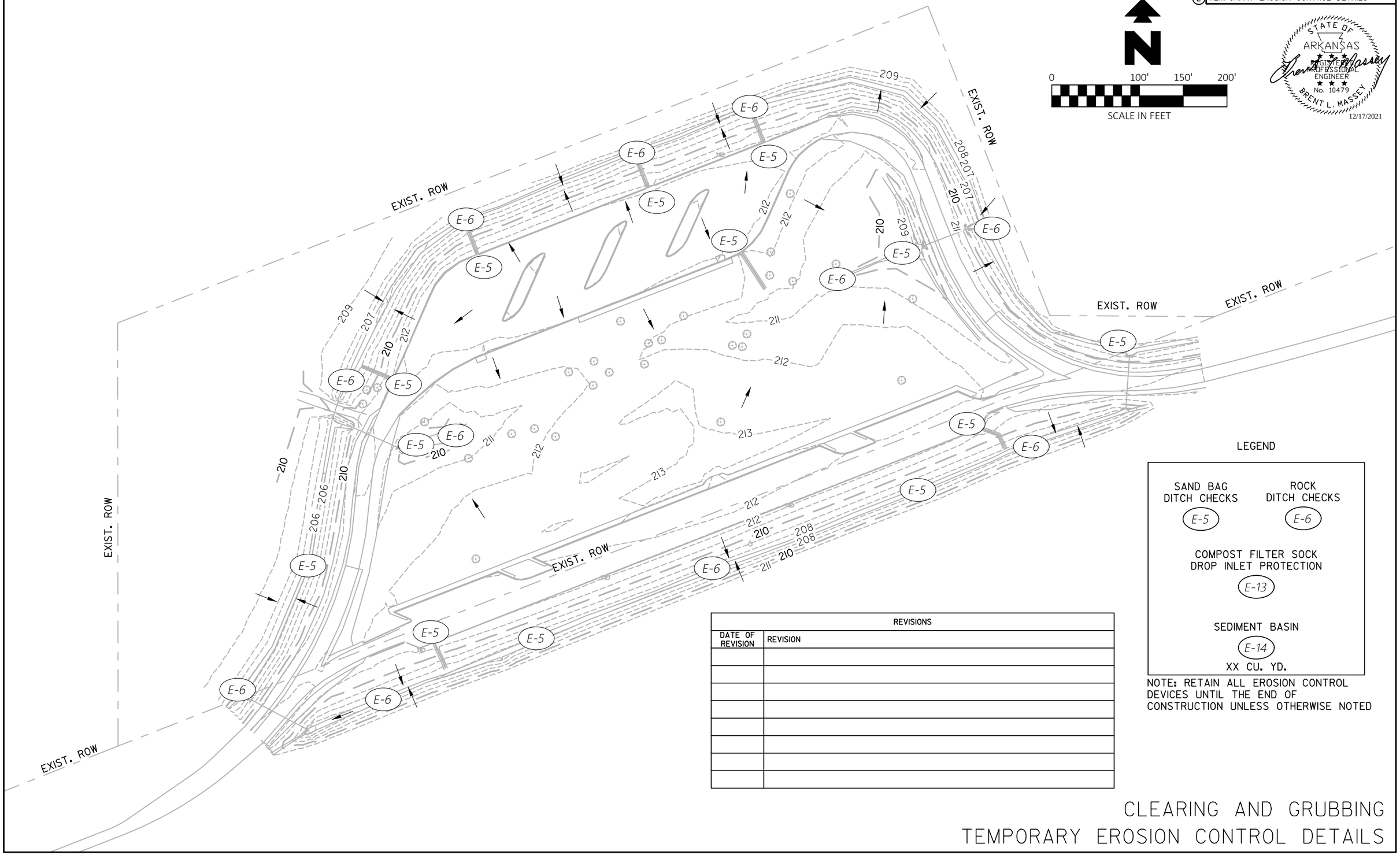

LEGEND

SAND BAG DITCH CHECKS — E-5

ROCK DITCH CHECKS — E-6

COMPOST FILTER SOCK DROP INLET PROTECTION — E-13

SEDIMENT BASIN — E-14 — XX CU. YD.

NOTE: RETAIN ALL EROSION CONTROL DEVICES UNTIL THE END OF CONSTRUCTION UNLESS OTHERWISE NOTED

REVISIONS	
DATE OF REVISION	REVISION

CLEARING AND GRUBBING
TEMPORARY EROSION CONTROL DETAILS

12/15/2021

31944 - ER0.dgn

DATE REVISED	DATE FILMED	DATE REVISED	DATE FILMED	FED.RD. DIST.NO.	STATE	FED. AID PROJ. NO.	SHEET NO.	TOTAL SHEETS
09-16-21				6	ARK.			
11-19-21				JOB NO.		110800	15	49
12-17-21								

(2) TEMPORARY EROSION CONTROL DETAILS

DESCRIPTION OF WORK

STAGE I EROSION CONTROL SHALL INCLUDE PLACEMENT OF EROSION CONTROL DEVICES SHOWN; SITE DEWATERING; TEMPORARY SLOPE STABILIZATION; TEMPORARY SODDING/SEEDING; AND OTHER MEASURES AS DETERMINED BY ENGINEER OF RECORD

N

0 100' 150' 200'

SCALE IN FEET

STATE OF ARKANSAS REGISTERED PROFESSIONAL ENGINEER No. 10479 BRENT L. MASSEY

12/17/2021

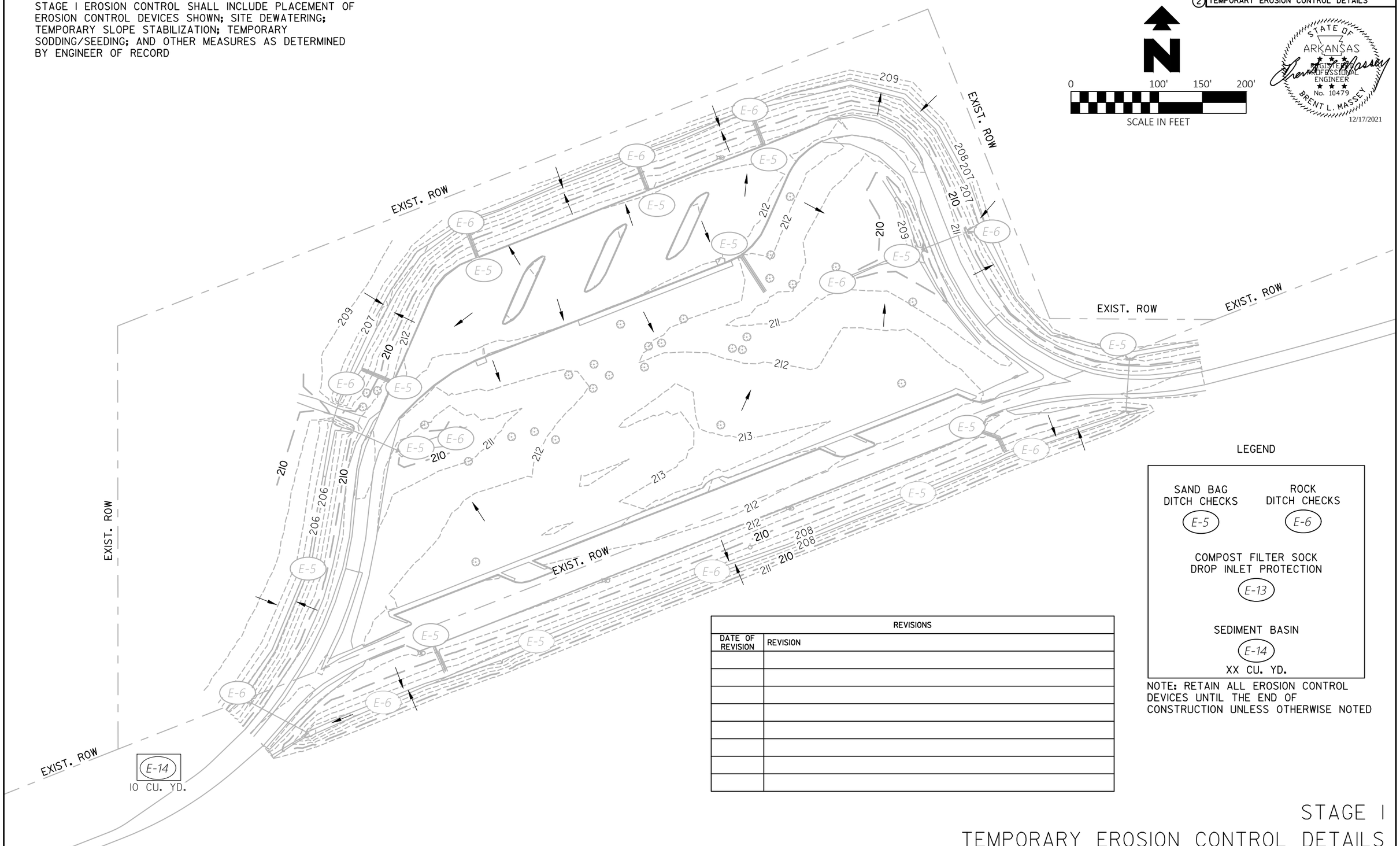

LEGEND

SAND BAG DITCH CHECKS	ROCK DITCH CHECKS
E-5	E-6

COMPOST FILTER SOCK DROP INLET PROTECTION

E-13

SEDIMENT BASIN

E-14

XX CU. YD.

NOTE: RETAIN ALL EROSION CONTROL DEVICES UNTIL THE END OF CONSTRUCTION UNLESS OTHERWISE NOTED

REVISIONS	
DATE OF REVISION	REVISION

STAGE I
TEMPORARY EROSION CONTROL DETAILS

12/15/2021

31944 - ERO.dgn

DATE REVISED	DATE FILMED	DATE REVISED	DATE FILMED	FED.RD. DIST.NO.	STATE	FED. AID PROJ. NO.	SHEET NO.	TOTAL SHEETS
06-04-21		12-17-21		6	ARK.			
09-16-21				JOB NO.		110800	16	49
11-19-21								

(2) TEMPORARY EROSION CONTROL DETAILS

DESCRIPTION OF WORK

STAGE 2 EROSION CONTROL SHALL INCLUDE PLACEMENT OF EROSION CONTROL DEVICES SHOWN; SITE DEWATERING; PERMANENT SLOPE STABILIZATION; PERMANENT SODDING/SEEDING; AND OTHER MEASURES AS DETERMINED BY ENGINEER OF RECORD

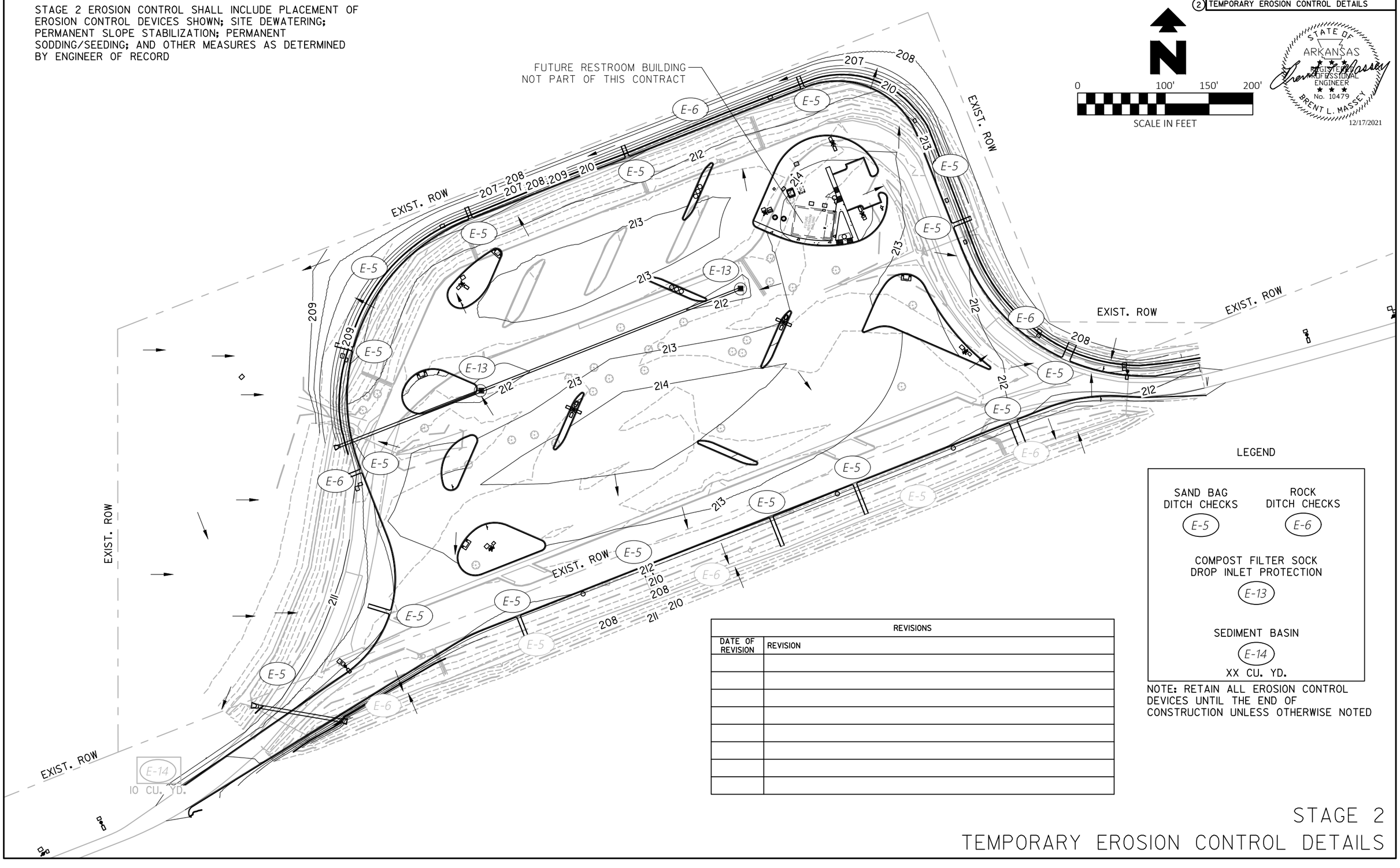

NOTE: RETAIN ALL EROSION CONTROL DEVICES UNTIL THE END OF CONSTRUCTION UNLESS OTHERWISE NOTED

REVISIONS	
DATE OF REVISION	REVISION

STAGE 2
TEMPORARY EROSION CONTROL DETAILS

12/15/2021

31944 - ER0.dgn

DATE REVISED	DATE FILMED	DATE REVISED	DATE FILMED	FED.RD. DIST.NO.	STATE	FED. AID PROJ. NO.	SHEET NO.	TOTAL SHEETS
09-16-21				6	ARK.			
11-19-21				JOB NO.		110800	17	49
12-17-21								

(2) MAINTENANCE OF TRAFFIC DETAILS

QUANTITIES
SIGNS = 48 SQ. FT.
TYPE III BARRICADE-RT. = 16 LIN. FT.
TYPE III BARRICADE-LT. = 16 LIN. FT.

CONSTRUCTION SEQUENCE
INSTALL BARRICADES AND CLOSURE SIGNS AS SHOWN ON MAINTENANCE OF TRAFFIC DETAILS.

INSTALL ADVANCE WARNING SIGNS AS SHOWN ON MAINTENANCE OF TRAFFIC DETAILS.

PHASE 1 AREA: REMOVE ALL ITEMS AS SHOWN ON DEMOLITION PLAN. CONSTRUCT UNDERGROUND UTILITIES, DRAINAGE STRUCTURES, BUILDINGS, AND NEW PAVEMENT AS SHOWN IN CONSTRUCTION PLANS.

PHASE 2 AREA: REMOVE ALL ITEMS AS SHOWN ON DEMOLITION PLAN. ADJUST EXISTING GROUND TO GRADES AS SHOWN ON PLAN SHEET. COMPACTION NOT REQUIRED IN FILL AREA.

REMOVE ADVANCE WARNING SIGNS.

REMOVE BARRICADES AND CLOSURE SIGNS.

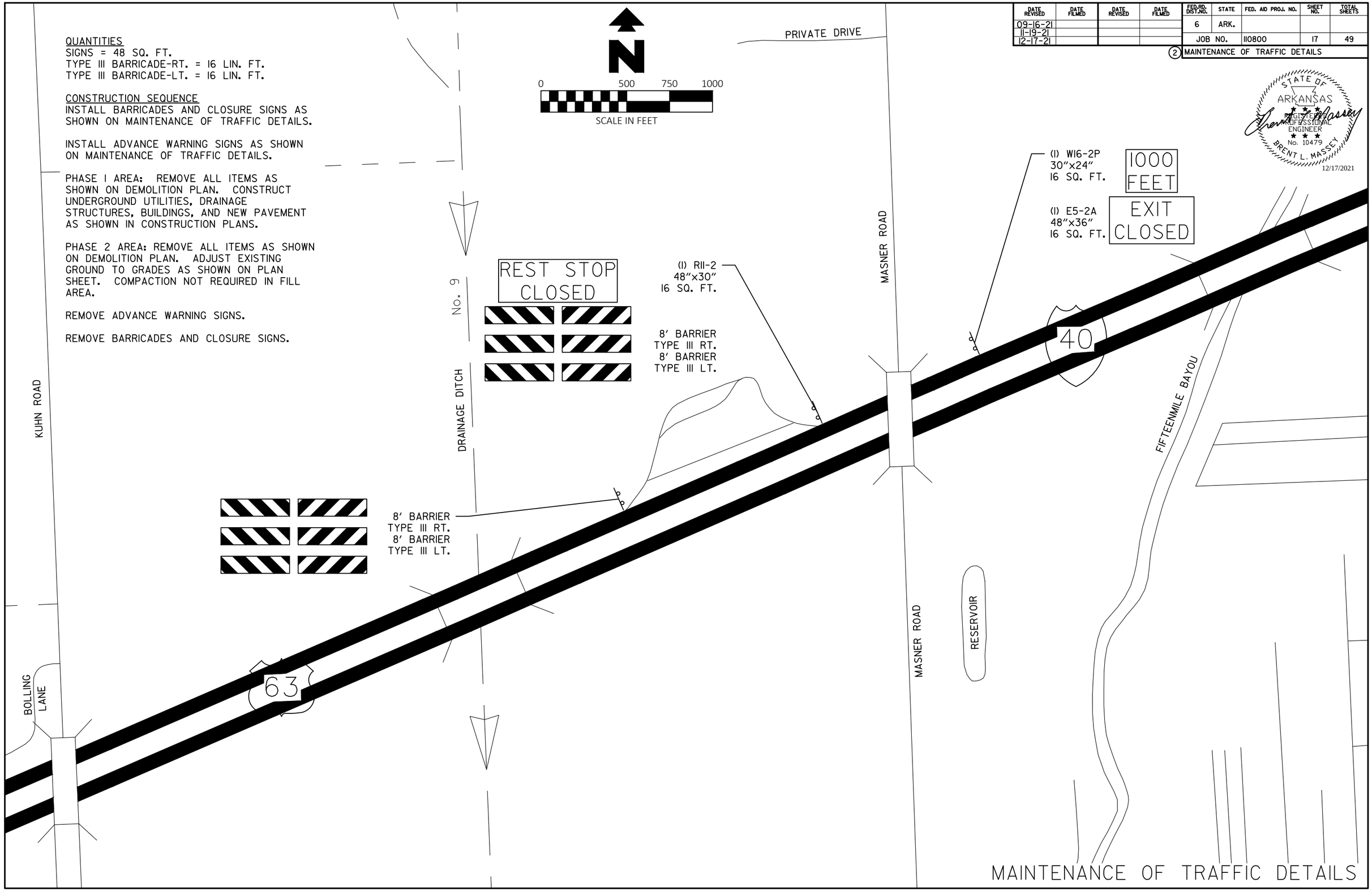

STATE OF ARKANSAS REGISTERED PROFESSIONAL ENGINEER No. 10479 BRENT L. MASSEY 12/17/2021

12/15/2021

31944 - MOT.dgn

DATE REVISED	DATE FILMED	DATE REVISED	DATE FILMED	FED.RD. DIST.NO.	STATE	FED. AID PROJ. NO.	SHEET NO.	TOTAL SHEETS
06-04-21		12-17-21		6	ARK.			
09-16-21				JOB NO.		110800	18	49
11-19-21								

(2) PERMANENT PAVEMENT MARKING PLAN

PERMANENT PAVEMENT MARKINGS

THERMOPLASTIC PAVEMENT MARKING WHITE (6") = 7871 LIN. FT.
THERMOPLASTIC PAVEMENT MARKING WHITE (8") = 1848 LIN. FT.
REFLECTORIZED PAINT PAVEMENT MARKING WHITE (10") = 1343 LIN. FT.
THERMOPLASTIC PAVEMENT MARKING WHITE (ARROWS) = 23 EACH
THERMOPLASTIC PAVEMENT MARKING WHITE (WHEELCHAIR) = 1 EACH

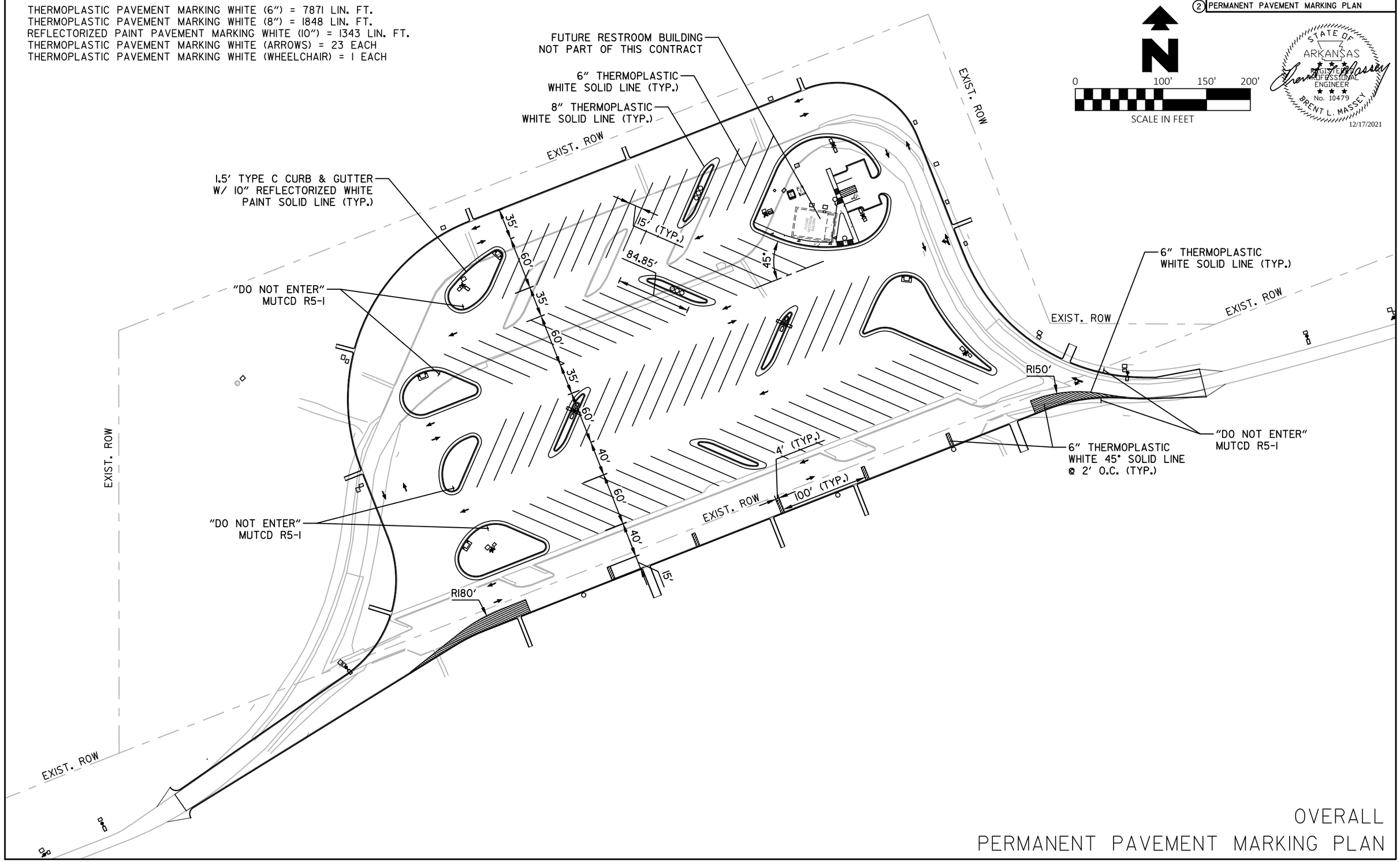

OVERALL
PERMANENT PAVEMENT MARKING PLAN

12/15/2021

31944 - STRP.dgn

DATE REVISED	DATE FILMED	DATE REVISED	DATE FILMED	FED.RD. DIST.NO.	STATE	FED. AID PROJ. NO.	SHEET NO.	TOTAL SHEETS
06-04-21		12-17-21		6	ARK.			
09-16-21				JOB NO.		110800	19	49
11-19-21								

(2) PERMANENT PAVEMENT MARKING PLAN

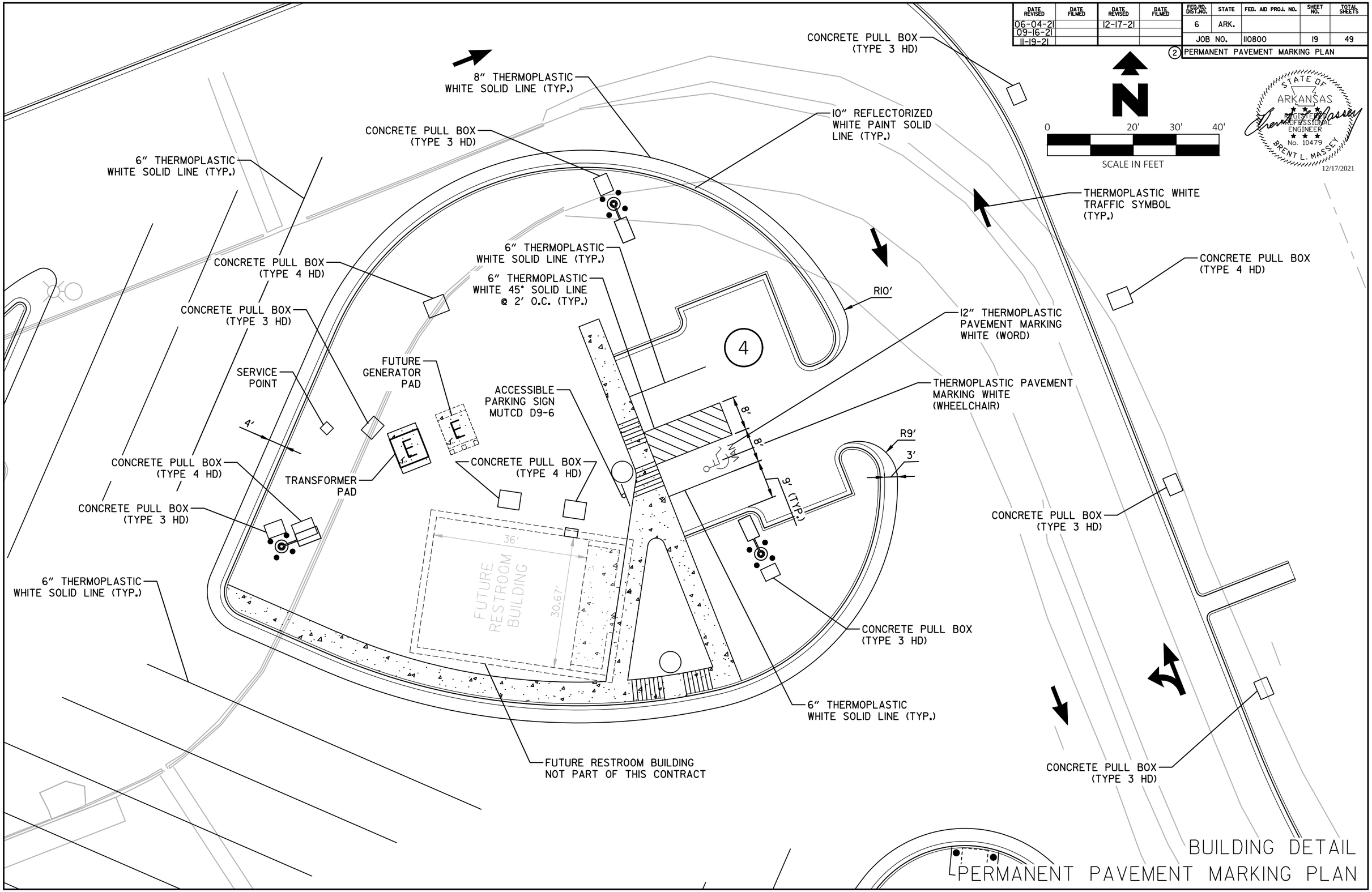

12/15/2021

31944 - STRP.dgn

DATE REVISED	DATE FILMED	DATE REVISED	DATE FILMED	FED.RD. DIST.NO.	STATE	FED. AID PROJ. NO.	SHEET NO.	TOTAL SHEETS
06-04-21		12-17-21		6	ARK.			
09-16-21				JOB NO.		110800	20	49
11-19-21								

(2) QUANTITIES

STATE OF ARKANSAS REGISTERED PROFESSIONAL ENGINEER No. 10479 BRENT L. MASSEY
12/17/2021

ADVANCE WARNING SIGNS AND DEVICES

SIGN NUMBER	DESCRIPTION	SIGN SIZE	TOTAL SIGNS REQUIRED		BARRICADES (TYPE III)	
					RIGHT	LEFT
			NO.	SQ. FT.	LIN. FT.	
E5-2A	EXIT CLOSED	48"x36"	1	12.0		
R11-2	REST STOP CLOSED	48"x30"	1	10.0		
W16-2P	1000 FEET	30"x24"	1	5.0		
	TYPE III BARRICADE-RT. (8')		2		16	
	TYPE III BARRICADE-LT. (8')		2			16
TOTALS:				27.0	16	16

NOTE: THIS IS A HIGH TRAFFIC VOLUME ROAD AS DEFINED IN SECTION 604.03, STANDARD SPECIFICATIONS FOR HIGHWAY CONSTRUCTION.

CONSTRUCTION PAVEMENT MARKINGS AND PERMANENT PAVEMENT MARKINGS

DESCRIPTION	THERMOPLASTIC PAVEMENT MARKING				REFLECTORIZED PAINT PAVEMENT MARKING
	6" WHITE	8" WHITE	ARROWS	WHEELCHAIR	10" WHITE
	LIN. FT.		EACH		LIN. FT.
THERMOPLASTIC PAVEMENT MARKING WHITE (6")	7871				
THERMOPLASTIC PAVEMENT MARKING WHITE (8")		1848			
THERMOPLASTIC PAVEMENT MARKING (ARROWS)			23		
THERMOPLASTIC PAVEMENT MARKING (WHEELCHAIR)				1	
REFLECTORIZED PAINT PAVEMENT MARKING WHITE (10")					1343
TOTALS:	7871	1848	23	1	1343

NOTE: THIS IS A HIGH TRAFFIC VOLUME ROAD AS DEFINED IN SECTION 604.03, STANDARD SPECIFICATIONS FOR HIGHWAY CONSTRUCTION.

REMOVAL AND DISPOSAL OF ITEMS

LOCATION	CURB AND GUTTER	CONCRETE PAVEMENT	WALKS	POLE AND FOUNDATION	ELECTRICAL TRANSFORMER	UNDERGROUND ELECTRICAL LINE
	LIN. FT.	SQ. YD.	SQ. YD.	EACH	EACH	LIN. FT.
ENTIRE PROJECT	2803	1247	646	5	1	506
TOTALS:	2803	1247	646	5	1	506

CONCRETE DITCH PAVING

LOCATION	LENGTH	"B"	CONC. DITCH PAVING FLUME	SOLID SODDING	WATER
	LIN. FT.	FEET	SQ. YD.	SQ. YD.	M. GAL.
FLUME 1	36.00	4.00	16.00	16.00	0.20
FLUME 2	36.00	9.00	36.00	16.00	0.20
FLUME 3	36.00	4.00	16.00	16.00	0.20
FLUME 4	37.00	4.00	16.00	16.44	0.21
FLUME 5	35.00	9.00	35.00	15.56	0.20
FLUME 6	20.00	9.00	20.00	8.89	0.11
FLUME 7	23.00	4.00	10.00	10.22	0.13
FLUME 8	14.00	4.00	6.00	6.22	0.08
FLUME 9	14.00	4.00	6.00	6.22	0.08
FLUME 10	14.00	4.00	6.00	6.22	0.08
FLUME 11	21.00	4.00	9.00	9.33	0.12
FLUME 12	21.00	4.00	9.00	9.33	0.12
FLUME 13	26.00	4.00	12.00	11.56	0.15
TOTALS:			197.00	147.99	1.88

BASIS OF ESTIMATE:
WATER.....12.6 GAL. / SQ. YD. OF SOLID SODDING.

CLEARING AND GRUBBING

STATION	STATION	LOCATION	CLEARING	GRUBBING
			ACRE	
ENTIRE PROJECT			8	8
TOTALS:			8	8

WHEELCHAIR RAMPS

LOCATION	TYPE 5	TYPE 6
	SQ. YD.	
RAMP 1	10.2	
RAMP 2		10.5
TOTALS:	10.2	10.5

CONCRETE COMBINATION CURB AND GUTTER

LOCATION	TYPE A (1' 6")
	LIN. FT.
ENTIRE PROJECT	3064
TOTAL:	3064

REMOVAL AND DISPOSAL OF CULVERTS

STATION	DESCRIPTION	PIPE CULVERTS
		EACH
ENTIRE PROJECT		5
TOTAL:		5

CONCRETE WALKS

LOCATION	LENGTH	AVG. WID.	CONCRETE WALKS
	LIN. FT.	LIN. FT.	SQ.YD.
BUILDING AREA	216	5	120
TOTAL:			120

TRASH RECEPTACLES

LOCATION	MODEL DR-350
	EACH
CURB ISLAND 8	3
CURB ISLAND 10	3
SOUTH OF PARALLEL PARKING AREA	3
BUILDING AREA	2
TOTAL:	11

CONCRETE ISLAND

LOCATION	CURB FACE TYPE	CONCRETE ISLAND
		SQ.YD.
CURB ISLAND 1	C	446
CURB ISLAND 2	C	67
CURB ISLAND 3	C	647
CURB ISLAND 4	C	179
CURB ISLAND 5	C	67
CURB ISLAND 6	C	67
CURB ISLAND 7	C	339
CURB ISLAND 8	C	67
CURB ISLAND 9	C	253
CURB ISLAND 10	C	67
TOTAL:		2199

EROSION CONTROL

STATION	STATION	LOCATION	PERMANENT EROSION CONTROL						TEMPORARY EROSION CONTROL									
			SEEDING	LIME	MULCH COVER	WATER	SECOND SEEDING APPLICATION	SOLID SODDING	TEMPORARY SEEDING	MULCH COVER	WATER	SAND BAG DITCH CHECKS (E-5)	ROCK DITCH CHECKS (E-6)	FILTER SOCK (12") (E-13)	SILT FENCE (E-11)	SEDIMENT BASIN (E-14)	OBLITERATION OF SEDIMENT BASIN	*SEDIMENT REMOVAL & DISPOSAL
			ACRE	TON	ACRE	M.GAL.	ACRE	SQ.YD.	ACRE	ACRE	M.GAL.	BAG	CU.YD.	LIN. FT.	LIN. FT.	CU.YD.	CU.YD.	CU. YD.
ENTIRE	PROJECT	CLEARING AND GRUBBING										286	33					24
ENTIRE	PROJECT	STAGE 1														10		10
ENTIRE	PROJECT	STAGE 2	1.40	2.80	1.40	157.5	1.40	1170	1.40	1.40	28.6	352	9	40			10	20
*ENTIRE PROJECT TO BE USED IF AND WHERE DIRECTED BY THE ENGINEER.			1.00	2.00	1.00	102.0	1.00		1.00	1.00	20.4	44	3	10	100	2	2	5
TOTALS:			2.40	4.80	2.40	259.5	2.40	1170	2.40	2.40	49.0	682	45	50	100	12	12	59

BASIS OF ESTIMATE:
LIME .....2 TONS / ACRE OF SEEDING
WATER.....102.0 M.G. / ACRE OF SEEDING
WATER.....20.4 M.G. / ACRE OF TEMPORARY SEEDING
WATER.....12.6 GAL. / SQ. YD. OF SOLID SODDING
SAND BAG DITCH CHECKS.....22 BAGS / LOCATION
ROCK DITCH CHECKS.....3 CU.YD./LOCATION

NOTE: THE TEMPORARY EROSION CONTROL DEVICES SHOWN ABOVE AND ON THE PLANS SHALL BE INSTALLED IN SUCH A SEQUENCE AS TO DETER EROSION AND SEDIMENTATION ON U.S. WATERWAYS AS EXPLAINED BY THE NATIONAL POLLUTANT DISCHARGE ELIMINATION SYSTEM PERMIT.

*QUANTITIES ESTIMATED.
SEE SECTION 104.03 OF THE STD. SPECS.

STATE OF ARKANSAS REGISTERED PROFESSIONAL ENGINEER No. 10479 BRENT L. MASSEY 12/17/2021

PIPE BOLLARDS

LOCATION	PIPE BOLLARD
	EACH
ENTIRE PROJECT	40
TOTAL:	**40**

GAS

LOCATION	GAS SERVICE	GAS LINE
	EACH	LIN. FT.
ENTIRE PROJECT	1	478
TOTALS:	**1**	**478**

NOTE: GAS METER SHALL BE INCLUDED IN THE GAS SERVICE QUANTITY AND PLACED AT THE DISCRETION OF THE UTILITY PROVIDER.

EARTHWORK

LOCATION	UNCLASSIFIED EXCAVATION	COMPACTED EMBANKMENT	* SOIL STABILIZATION
	CU. YD.		TON
ENTIRE PROJECT	2609	5716	
ENTIRE PROJECT TO BE USED IF AND WHEN DIRECTED BY THE ENGINEER	100	150	40
TOTALS:	**2709**	**5866**	**40**

QUANTITY ESTIMATED.
* SEE SECTION 104.03 OF THE STD. SPECS.

NOTE: EARTHWORK QUANTITIES SHOWN ABOVE SHALL BE PAID AS PLAN QUANTITY.

STANDARD SIGNS - SHEET ALUMINIUM 0.100" THICKNESS (5 SQ. FT. OR LESS)

SIGN NUMBER	DESCRIPTION	SIGN SIZE	TOTAL SIGNS REQUIRED		OMNI-DIRECTIONAL BREAKAWAY SIGN SUPPORTS (TYPE G-1)
			NO.	SQ. FT.	EACH
D9-6	ACCESSIBLE PARKING	24"x24"	1	4.0	1
R5-1	DO NOT ENTER	24"x24"	6	24.0	6
TOTALS:				**28.0**	**7**

NOTE: THIS IS A HIGH TRAFFIC VOLUME ROAD AS DEFINED IN SECTION 604.03, STANDARD SPECIFICATIONS FOR HIGHWAY CONSTRUCTION.

SELECTED PIPE BEDDING

LOCATION	SELECTED PIPE BEDDING
	CU.YD.
ENTIRE PROJECT TO BE USED IF	
AND WHERE DIRECTED BY THE	25
ENGINEER	
TOTAL:	**25**

NOTE: QUANTITY ESTIMATED.
SEE SECTION 104.03 OF THE STD. SPECS.

STRUCTURES

NORTHING	EASTING	REINFORCED CONCRETE PIPE (CLASS III)			FLARED END SECTIONS FOR R.C. PIPE CULVERTS		DROP INLETS TYPE	STD. DWG. NOS.
		24"	30"	36"	30"	36"	ST	
		LIN. FT.			EACH			
304395.97	1838160.83	318					1	FPC-9S, PCC-1
304279.35	1837864.77		180		1		1	FES-1, FES-2, FPC-9S, PCC-1
303885.03	187669.47			111		2		FES-1, FES-2, FPC-9S, PCC-1
TOTALS:		**318**	**180**	**111**	**1**	**2**	**2**	

BASIS OF ESTIMATE:
NOTE: FOR R.C. PIPE CULVERT INSTALLATIONS USE TYPE 3 BEDDING UNLESS OTHERWISE SPECIFIED.

DRIVEWAYS & TURNOUTS

LOCATION	WIDTH	PORTLAND CEMENT CONCRETE DRIVEWAY
	FEET	SQ. YD.
BUILDING PARKING AREA	VAR.	283.48
TOTAL:		**283.48**

PTZ CAMERA AND RADAR DETECTION SYSTEM CONDUIT INSTALLATION

LOCATION	NON-METALLIC CONDUIT (2")	CONCRETE PULL BOX (TYPE 2 HD)	CONCRETE PULL BOX (TYPE 3 HD)	TRAFFIC SIGNAL MAST ARM AND POLE WITH FOUNDATION (30')	TRAFFIC SIGNAL MAST ARM AND POLE WITH FOUNDATION (50')
				POLE HEIGHT 30'	POLE HEIGHT 50'
	LIN. FT.	EACH	EACH	EACH	EACH
ENTIRE PROJECT	3057	3	1	2	2
TOTALS:	**3057**	**3**	**1**	**2**	**2**

ELECTRICAL

LOCATION	NON-METALLIC CONDUIT (4")
	LIN. FT.
TRANSFORMER PAD TO LIGHTING SERVICE POINT	40
TOTALS:	**40**

FIBER OPTIC CONDUIT INSTALLATION

LOCATION	NON-METALLIC CONDUIT (2")	CONCRETE PULL BOX (TYPE 4 HD)
	LIN. FT.	EACH
ENTIRE PROJECT	3772	18
TOTALS:	**3772**	**18**

SANITARY SEWER

LOCATION	SANITARY SEWER FORCE MAIN (2 1/2")	SANITARY SEWER PIPE (PVC SDR-26) (6")	SANITARY SEWER MANHOLES (4' DIA.)	SANITARY SEWER GRINDER PUMP STATION	SANITARY SEWER GRINDER	TAPPING SADDLE (2.5")	GATE VALVE (2.5")
	LIN. FT.	LIN. FT.	EACH	EACH	EACH	EACH	EACH
ENTIRE PROJECT	3017	5	1	1	1	1	1
TOTALS:	**3017**	**5**	**1**	**1**	**1**	**1**	**1**

MAIN LANES ROADSIDE MOUNTED SIGNING QUANTITIES

SIGN NO. / LOCATION	I-BEAM STRUCTURE TYPE			GUIDE SIGN DEMOUNTABLE LEGEND			I-BEAM BREAKAWAY SIGN SUPPORT												
							STEEL SECT. A-572		SIGN POST LENGTH			STUB POST			FOOTINGS			SIGN POST AND STUB
	G1	G2	G3	LENGTH	HEIGHT				H - 1	H - 2	H - 3	H - 1	H - 2	H - 3	DIA.	DEPTH	EMBED.	
				LIN. FT.		SQ. FT.	BEAM	LBS	LIN FT			LIN FT			LIN FT			POUND
ML55-TP275-3SB		1		15.00	7.00	105.00	W8	18.00	14.00	15.00		3.99	3.99		2.50	5.50	3.66	665.64
ML40-TP275-4WB		1		15.00	7.00	105.00	W8	18.00	14.00	15.00		3.99	3.99		2.50	5.50	3.66	665.64
ML40-TP275-2WB		1		15.50	8.00	124.00	W8	21.00	15.00	16.00		4.99	4.99		2.50	7.00	4.66	860.58
TOTALS :		**3**				**334.00**												**2191.86**

CONCRETE BASE

LOCATION	LENGTH	CEMENT STABILIZED CRUSHED STONE BASE COURSE (6" COMP'D. DEPTH)				TYPE 8 GEOTEXTILE FABRIC		ROLLER-COMPACTED CONCRETE PAVEMENT	
		AVG. WID.	PROCESSING	CEMENT	AGGREGATE	AVG. WID.	SQ. YD.	AVG. WID.	8"
	FEET	FEET	SQ. YD.	TON	TON	FEET		FEET	SQ. YD.
ENTIRE PROJECT - OVERLAY OF EXISTING PAVEMENT	VAR.					VAR.	8609.55	VAR.	8609.55
ENTIRE PROJECT - FULL-DEPTH NEW PAVEMENT	VAR.	VAR.	27046.00	472.98	9015.33	VAR.	27046.00	VAR.	26435.45
TOTALS:			**27046.00**	**472.98**	**9015.33**		**35655.55**		**35045.00**

BASIS OF ESTIMATE:
CEMENT STABILIZED CRUSHED STONE BASE COURSE = 94.0% AGGR. 6.0% CEMENT

WATER

LOCATION	PVC AWWA C900 CLASS 160 (1")	PVC AWWA C900 CLASS 160 (3")	PVC AWWA C900 CLASS 150 (6")	GATE VALVE (1")	GATE VALVE (3")	GATE VALVE (6")	FIRE HYDRANT ASSEMBLY	MJ TEE (3" X 3")	MJ TEE (6" X 6")	DUCTILE IRON FITTINGS
	LIN. FT.	LIN. FT.	LIN. FT.	EACH	EACH	EACH	EACH	EACH	EACH	LBS.
ENTIRE PROJECT	32	94	340	1	1	1	1	1	1	180
TOTALS:	**32**	**94**	**340**	**1**	**1**	**1**	**1**	**1**	**1**	**180**

DATE REVISED	DATE FILMED	DATE REVISED	DATE FILMED
04-26-21		09-16-21	
05-06-21		12-17-21	
06-04-21			
06-23-21			

FED.RD. DIST.NO.	STATE	FED. AID PROJ. NO.	SHEET NO.	TOTAL SHEETS
6	ARK.			
JOB NO.		110800	22	49
SUMMARY OF QUANTITIES AND REVISIONS				

2

STATE OF ARKANSAS REGISTERED PROFESSIONAL ENGINEER No. 10479 BRENT L. MASSEY

12/17/2021

SUMMARY OF QUANTITIES

ITEM NUMBER	ITEM	QUANTITY	UNIT
201	CLEARING	8	ACRE
201	GRUBBING	8	ACRE
202	REMOVAL AND DISPOSAL OF CURB AND GUTTER	2803	LIN. FT.
202	REMOVAL AND DISPOSAL OF UNDERGROUND ELECTRICAL LINE	506	LIN. FT.
202	REMOVAL AND DISPOSAL OF CONCRETE PAVEMENT	1247	SQ. YD.
202	REMOVAL AND DISPOSAL OF WALKS	646	SQ. YD.
202	REMOVAL AND DISPOSAL OF PIPE CULVERTS	5	EACH
202	REMOVAL AND DISPOSAL OF POLE AND FOUNDATION	5	EACH
202	REMOVAL AND DISPOSAL OF ELECTRICAL TRANSFORMER	1	EACH
SS & 210	UNCLASSIFIED EXCAVATION	2709	CU. YD.
210	COMPACTED EMBANKMENT	5866	CU. YD.
SP & 210	SOIL STABILIZATION	40	TON
308	AGGREGATE IN CEMENT STABILIZED CRUSHED STONE BASE COURSE	9015	TON
308	CEMENT IN CEMENT STABILIZED CRUSHED STONE BASE COURSE	473	TON
308	PROCESSING CEMENT STABILIZED CRUSHED STONE BASE COURSE	27046	SQ. YD.
SS & 505	PORTLAND CEMENT CONCRETE DRIVEWAY	283	SQ. YD.
SP	ROLLER COMPACTED CONCRETE PAVEMENT (8")	35045	SQ. YD.
601	MOBILIZATION	1.00	LUMP SUM
SP & 602	FURNISHING FIELD OFFICE	1	EACH
SP, SS, & 603	MAINTENANCE OF TRAFFIC	1.00	LUMP SUM
SS & 604	SIGNS	27	SQ. FT.
SS & 604	BARRICADES	32	LIN. FT.
SP, SS, & 605	CONCRETE DITCH PAVING (TYPE FLUME)	197	SQ. YD.
606	24" REINFORCED CONCRETE PIPE CULVERTS (CLASS III)	318	LIN. FT.
606	30" REINFORCED CONCRETE PIPE CULVERTS (CLASS III)	180	LIN. FT.
606	36" REINFORCED CONCRETE PIPE CULVERTS (CLASS III)	111	LIN. FT.
606	30" FLARED END SECTIONS FOR REINFORCED CONCRETE PIPE CULVERTS	1	EACH
606	36" FLARED END SECTIONS FOR REINFORCED CONCRETE PIPE CULVERTS	2	EACH
606	SELECTED PIPE BEDDING	25	CU. YD.
SS & 609	DROP INLETS (TYPE ST)	2	EACH
620	LIME	5	TON
620	SEEDING	2.40	ACRE
SS & 620	MULCH COVER	4.80	ACRE
620	WATER	310.4	M. GAL.
621	TEMPORARY SEEDING	2.40	ACRE
621	SILT FENCE	100	LIN. FT.
621	SAND BAG DITCH CHECKS	682	BAG
621	SEDIMENT BASIN	12	CU. YD.
621	OBLITERATION OF SEDIMENT BASIN	12	CU. YD.
621	SEDIMENT REMOVAL AND DISPOSAL	59	CU. YD.
621	ROCK DITCH CHECKS	45	CU. YD.
SS & 621	FILTER SOCK (12")	50	LIN. FT.
623	SECOND SEEDING APPLICATION	2.40	ACRE
624	SOLID SODDING	1318	SQ. YD.
SP & 625	GEOTEXTILE FABRIC (TYPE 8)	35656	SQ. YD.
SS & 632	CONCRETE ISLAND	2199	SQ. YD.
SS & 633	CONCRETE WALKS	120	SQ. YD.
SS & 634	CONCRETE COMBINATION CURB AND GUTTER (TYPE A) (1' 6")	3064	LIN. FT.
641	WHEELCHAIR RAMPS (TYPE 5)	10	SQ. YD.
641	WHEELCHAIR RAMPS (TYPE 6)	11	SQ. YD.
SP	ELECTRICAL CONDUCTORS-IN-CONDUIT (2C/8 A.W.G., E.G.C.)	1509	LIN. FT.
SP	ELECTRICAL CONDUCTORS-IN-CONDUIT (2C/6 A.W.G.)	2048	LIN. FT.
SP	ELECTRICAL CONDUCTORS-IN-CONDUIT (2C/4 A.W.G., E.G.C.)	2583	LIN. FT.
SP	ELECTRICAL CONDUCTORS-IN-CONDUIT (1C/6 A.W.G.)	2048	LIN. FT.
SP	ELECTRICAL CONDUCTORS FOR LUMINAIRES	2338	LIN. FT.
710	NON-METALLIC CONDUIT (2")	6978	LIN. FT.
710	NON-METALLIC CONDUIT (4")	40	LIN. FT.
SP & 710	NON-METALLIC CONDUIT (2")	3772	LIN. FT.
711	CONCRETE PULL BOX (TYPE 2 HD)	3	EACH
711	CONCRETE PULL BOX (TYPE 3 HD)	19	EACH
SP & 711	CONCRETE PULL BOX (TYPE 4 HD)	18	EACH
SS & 714	TRAFFIC SIGNAL MAST ARM AND POLE WITH FOUNDATION (30')	2	EACH
SS & 714	TRAFFIC SIGNAL MAST ARM AND POLE WITH FOUNDATION (50')	2	EACH
SP	HIGH MAST ILLUMINATION ASSEMBLY (100'-4 LUMINAIRE)	2	EACH
SP	PEDESTAL TYPE SERVICE POINT (100 AMP)	1	EACH
718	REFLECTORIZED PAINT PAVEMENT MARKING WHITE (10")	1343	LIN. FT.
719	THERMOPLASTIC PAVEMENT MARKING WHITE (6")	7871	LIN. FT.
719	THERMOPLASTIC PAVEMENT MARKING WHITE (8")	1848	LIN. FT.
719	THERMOPLASTIC PAVEMENT MARKING (ARROWS)	23	EACH
SP & 719	THERMOPLASTIC PAVEMENT MARKING SYMBOLS (WHEELCHAIR)	1	EACH
SS & 725	GUIDE SIGN-ROADSIDE MOUNTED (DEMOUNTABLE LEGEND)	334	SQ. FT.
SS & 726	STANDARD SIGN	28	SQ. FT.
SS & 730	BREAKAWAY SIGN SUPPORT (TYPE G-2)	2192	POUND
SP	OMNI-DIRECTIONAL BREAKAWAY SIGN SUPPORTS (TYPE G-1)	7	EACH
SP	TRASH RECEPTACLE	11	EACH
SP	PVC AWWA C900 CLASS 160 (1")	32	LIN. FT.
SP	PVC AWWA C900 CLASS 160 (3")	94	LIN. FT.
SP	PVC AWWA C900 CLASS 150 (6")	340	LIN. FT.
SP	GATE VALVE (1")	1	EACH
SP	GATE VALVE (3")	1	EACH
SP	GATE VALVE (6")	1	EACH
SP	FIRE HYDRANT ASSEMBLY	1	EACH
SP	MJ TEE (3" X 3")	1	EACH
SP	MJ TEE (6" X 6")	1	EACH
SP	DUCTILE IRON FITTINGS	180	LBS.
SP	SANITARY SEWER FORCE MAIN (2 1/2")	3017	LIN. FT.
SP	SANITARY SEWER PIPE (PVC SDR-26) (6")	5	LIN. FT.
SP	SANITARY SEWER MANHOLES (4')	1	EACH
SP	SANITARY SEWER GRINDER PUMP STATION	1	EACH
SP	SANITARY SEWER GRINDER	1	EACH
SP	TAPPING SADDLE (2.5")	1	EACH
SP	GATE VALVE (2.5")	1	EACH
SP	GAS SERVICE	1	EACH
SP	GAS LINE	478	LIN. FT.
SP	PIPE BOLLARD	40	EACH
SP	LED ROADWAY ILLUMINATION POLE (15,000 LUMENS, COBRA HEAD, T-BASE, 40')	5	EACH
SP	LED ROADWAY ILLUMINATION POLE (15,000 LUMENS, COBRA HEAD, SHOE BASE, 40')	2	EACH
SP	LED ROADWAY ILLUMINATION POLE (15,000 LUMENS, COBRA HEAD, SHOE BASE, 50')	2	EACH

REVISIONS (BLOCK 1 OF 3)

DATE	REVISION	SHEET NUMBER
4/26/2021	REMOVED DISADVANTAGED BUSINESS ENTERPRISE BIDDER'S RESPONSIBILITIES AND GOALS FOR DISADVANTAGED BUSINESS ENTERPRISE PARTICIPATION	3 & 19
5/6/2021	REVISED "ELECTRICAL CONDUCTORS-IN-CONDUIT", "WATER DISTRIBUTION FACILITIES", "SANITARY SEWER FACILITIES", "SANITARY SEWER GRINDER PUMP STATION", AND "SANITARY SEWER GRINDER" SPS; ADDED "PTZ CAMERAS", "RADAR DETECTION SYSTEM", AND "DYNAMIC MESSAGING SYSTEM" SPS; ADDED SHEETS 10A AND 10B TO SHEET INDEX ON SHEET 2; ADDED "PTZ CAMERAS", "RADAR DETECTION SYSTEM", AND "DYNAMIC MESSAGING SYSTEM" SPS TO SHEET 3; REVISED CALLOUT OF DYNAMIC MESSAGING SYSTEM FOR ML40-TP275-2WB DETAIL ON SHEET 7; ADDED DETAILS FOR THRUST BLOCKING, FIRE HYDRANT ASSEMBLY, SANITARY SEWER CLEAN-OUT, CAST-IN-PLACE SANITARY SEWER MANHOLES, AND PIPE TRENCHING AND BEDDING TO SHEETS 10A AND 10B; REVISED PAY ITEM NAMES FOR TAPPING SADDLE (2.5") AND GATE VALVE (2.5"), ADDED QUANTITY ITEMS FOR 2.5" TAPPING SADDLE AND 2.5" GATE VALVE TO SANITARY SEWER QUANTITIES, AND REVISED ELECTRICAL QUANTITIES WITH CONDUIT SIZE, WIRE GAUGE, AND QUANTITIES FOR PTZ CAMERAS AND RADAR SYSTEMS ON SHEET 18; REVISED PAY ITEM NAMES FOR TAPPING SADDLE (2.5") AND GATE VALVE (2.5"), ADDED QUANTITY ITEMS FOR TAPPING SADDLE (2.5") AND GATE VALVE (2.5") TO SUMMARY OF QUANTITIES, REVISED SUMMARY OF QUANTITIES TO INCLUDE CONDUIT SIZE, WIRE GAUGE, AND QUANTITIES FOR PTZ CAMERAS AND RADAR DETECTION SYSTEM, REVISED SUMMARY OF QUANTITIES TO PROPOSE 2 40' SHOE BASE ILLUMINATON POLES AND 2 50' SHOE BASE ILLUMINATION POLES, AND REVISED ORDER OF PAY ITEMS FOR ELECTRICAL CONDUCTORS-IN-CONDUIT (2C/10 A.W.G., E.G.C.), ELECTRICAL CONDUCTORS-IN-CONDUIT (2C/3 A.W.G., E.C.G.), PTZ CAMERAS, RADAR DETECTION SYSTEM, TAPPING SADDLE (2.5"), GATE VALVE (2.5"), AND LED ROADWAY ILLUMINATION POLE (15,000 LUMENS, COBRA HEAD, SHOE BASE, 50') ON SHEET 19; CALLED OUT TRAFFIC SIGNAL PEDESTAL POLES WITH CIRCUIT NUMBERS, CONDUIT SIZES, AND WIRE GAUGES AND REVISED UNDERGROUND FIBER OPTIC AND ELECTRIC CABLE CALLOUTS TO REMOVE CONDUIT SIZE ON SHEET 27; REVISED INVERT FLOW DIRECTION IN CALLOUT ON SHEET 28; REVISED INVERT ELEVATIONS IN CALLOUT AND ADDED NOTE 14 CALLOUT TO POWER POLES 8 AND 9 ON SHEET 28; REVISED CALLOUT TO INDICATE THAT PROPOSED FORCE MAIN WILL CONNECT TO EXISTING FORCE MAIN WITH 2.5" TAPPING SADDLE AND 2.5" GATE VALVE ON SHEET 29; ADDED FOUNDATION DIMENSIONS TO SHEET 42; REVISED SUMMARY OF ILLUMINATION QUANTITIES TO PROPOSE 2 40' SHOE BASE ILLUMINATON POLES AND 2 50' SHOE BASE ILLUMINATION POLES ON SHEET ON SHEET 59; REVISED HEIGHTS OF POLES 8 AND 9 AND REVISED ILLUMINATION TABLES ON SHEET 60	2, 3, 7, 10A, 10B, 18, 19, 27, 28, 29, 42, 59, 60
6/4/2021	REMOVED "SAWCUT EXISTING CONCRETE PAVING" SP; REVISED "FIBER OPTIC FACILITIES" SP; REVISED "UNDERCUT BACKFILL" SP; REVISED "ROLLER COMPACTED CONCRETE PAVEMENT" SP; ADDED SS 505-1; ADDED "REACTIVE AGGREGATE" SP; UPDATED REVISION DATES FOR ROADWAY STANDARD DRAWINGS TC-2 AND TC-3 ON SHEET 2; REMOVED "SAWCUT EXISTING PAVEMENT" SP, ADDED SS 505-1 AND "REACTIVE AGGREGATE" SP TO SHEET 3; ADDED DETAIL FOR P.C. CONCRETE DRIVEWAY SECTION TO SHEET 5; RENAMED "PHASE 1 CURB ISLAND 6" TO "BUILDING DETAIL", REVISED SHEET SUBTITLE TO " PHASE 1 CURB ISLANDS AND BUILDING DETAIL", AND REMOVED DETAIL FOR PHASE 1 CURB ISLAND 7 FROM SHEET 9; REVISED PHASE LINE, REMOVED PHASE 1 CURB ISLAND 7, REPLACED FULL DEPTH ROLLER-COMPACTED CONCRETE ADJACENT TO AHP STATION WITH PORTLAND CEMENT CONCRETE, AND REVISED CONCRETE CURB ISLAND LEGEND DESCRIPTIONS TO INCLUDE "CONSTRUCTED OVER ROLLER-COMPACTED CONCRETE PAVEMENT" ON SHEET 10; REVISED PHASE LINE AND GRADING ON SHEET 13; REVISED PHASE LINE, ADDED THERMOPLASTIC PAVEMENT MARKING WHITE (6"), UPDATED QUANTITY FOR THERMOPLASTIC PAVEMENT MARKING WHITE (6"), UPDATED QUANTITY FOR THERMOPLASTIC PAVEMENT MARKING WHITE (8"), AND UPDATED QUANTITY FOR REFLECTORIZED PAINT PAVEMENT MARKING (10") ON SHEET 15; REVISED PHASE LINE ON SHEET 16; REMOVED SAWCUT EXISTING PAVEMENT QUANTITY BOX, UPDATED QUANTITY FOR THERMOPLASTIC PAVEMENT MARKING WHITE (6"), UPDATED QUANTITY FOR THERMOPLASTIC PAVEMENT MARKING WHITE (8"), UPDATED REFLECTORIZED PAINT PAVEMENT MARKING (10"), AND UPDATED QUANTITY FOR CONCRETE ISLANDS ON SHEET 17; ADDED QUANTITY FOR NON-METALLIC CONDUIT (4"), ADDED QUANTITY BOX FOR PORTLAND CEMENT CONCRETE DRIVEWAY (6"), AND REMOVED FIBER OPTIC CABLE AND FIBER OPTIC SERVICE QUANTITIES FROM FIBER OPTIC QUANTITY BOX ON SHEET 18; REMOVED PAY ITEM FOR SAWCUT EXISTING PAVEMENT, UPDATED PAY ITEM QUANTITY FOR THERMOPLASTIC PAVEMENT MARKING WHITE (6"), UPDATED PAY ITEM QUANTITY FOR THERMOPLASTIC PAVEMENT MARKING WHITE (8"), UPDATED PAY ITEM QUANTITY FOR REFLECTORIZED PAINT PAVEMENT MARKING (10"), UPDATED PAY ITEM QUANTITY FOR CONCRETE ISLANDS, ADDED PAY ITEM QUANTITY FOR NON-METALLIC CONDUIT (4"), ADDED PAY ITEM QUANTITY FOR PORTLAD CEMENT CONCRETE DRIVEWAY, UPDATED PAY ITEM QUANTITY FOR CONCRETE PULL BOX (TYPE 2 HD), REMOVED PAY ITEM FOR FIBER OPTIC CABLE, REMOVED PAY ITEM QUANTITY FOR FIBER OPTIC SERVICE, AND REMOVED "SP &" FROM ITEM NUMBER OF GEOTEXTILE (TYPE 8) PAY ITEM ON SHEET 19; REMOVED NOTE 8 FROM DEMOLITION NOTES, RENUMBERED NOTE 9 TO NOTE 8 IN DEMOLITION NOTES, AND RENUMBERED NOTE 10 TO NOTE 9 IN DEMOLITON NOTES ON SHEET 22; REVISED PHASE LINE, REVISED CALLOUT FOR PHASE 1 CURB ISLAND 7 TO "PHASE 2 CURB ISLAND 5", AND REMOVED "PHASE 1 CURB ISLAND 6" CALLOUT FROM SHEET 23; REVISED PHASE LINE ON SHEET 24; REVISED PHASE LINE AND ADJUSTED GRADING ON SHEET 25; REVISED PHASE LINE ON SHEET 26; REVISED PHASE LINE, REVISED NOTE 10 TO "SERVICE POINT" IN UTILITY NOTES, REVISED LOCATION OF SERVICE CONNECTION POINT, AND REVISED ROUTING OF UNDERGROUND ELECTRIC CABLE FROM SERVICE CONNECTION POINT TO TRANSFORMER; REVISED PHASE LINE, REVISED LOCATION OF LIGHTING SERVICE CONNECTION POINT, AND REVISED ROUTING OF UNDERGROUND ELECTRIC CABLE FROM SERVICE CONNECTION POINT TO TRANSFORMER; REVISED PHASE LINE ON SHEET 29; TYPE 2 HD PULL BOX QUANTITY INCREASE FROM 13 TO 14 ON SHEET 59; LUMINAIRE SCHEDULE TABLE FOR THE CHANGED SERVICE POINT LOCATIONS AND VOLTAGE DROP (NEW CALCULATION) TABLES WERE CHANGED ON SHEET 60; REPRINTED LAYOUT (100 SCALE) WITH THE NEW LOCATION FOR THE SERVICE POINT ON SHEET 61; REPRINTED LAYOUT (60 SCALE) WITH THE NEW LOCATION FOR THE SERVICE POINT ON SHEET 63; ADDED SHEETS 62 AND 64-70 TO PLAN SET	2, 3, 5, 9, 10, 13, 15, 16, 17, 18, 19, 22, 23, 24, 25, 26, 27, 28, 29, 59, 60, 61, 62, 63, 64, 65, 66, 67, 68, 69, 70
6/23/2021	REVISED "RADAR DETECTION SYSTEM" SP; REVISED "SANITARY SEWER FACILITIES" SP; REVISED "WATER DISTRIBUTION FACILITIES" SP; REVISED "REACTIVE AGGREGATE TESTING" SP ON SHEET 3; REVISED ROLLER-COMPACTED CONCRETE PAVING DETAIL AND PORTLAND CEMENT CONCRETE DRIVEWAY DETAIL ON SHEET 5; ADDED SOLID TRACER WIRE CALLOUT TO WATER LINE AND FORCE MAIN DETAIL ON SHEET 10B; REVISED "ROLLER COMPACTED CONRETE PAVEMENT (8")" QUANTITY AND "GEOTEXTILE FABRIC (TYPE 8)" QUANTITY ON SHEET 19; ADJUSTED ELEVATION OF SANITARY SEWER CLEANOUT (8) AND REVISED SANITARY SEWER MANHOLE CALLOUT (10) ON SHEET 28	3, 5, 10B, 19, 28

12/17/2021

31944 - QNTY.dgn

SUMMARY OF QUANTITIES AND REVISIONS

DATE REVISED	DATE FILMED	DATE REVISED	DATE FILMED
04-26-21		09-16-21	
05-06-21		11-19-21	
06-04-21		12-17-21	
06-23-21			

FED.RD. DIST.NO.	STATE	FED. AID PROJ. NO.	SHEET NO.	TOTAL SHEETS
6	ARK.			
JOB NO.		110800	23	49
SUMMARY OF QUANTITIES AND REVISIONS				

2

STATE OF ARKANSAS REGISTERED PROFESSIONAL ENGINEER No. 10479 BRENT L. MASSEY

12/17/2021

REVISIONS (BLOCK 2 OF 3)

DATE	REVISION	SHEET NUMBER
9/16/2021	UPDATED TOTAL SHEET NUMBER ON ALL SHEETS; REMOVED "DYNAMIC MESSAGING SYSTEM" SP; REMOVED "ELECTRICAL METERING" SP; REMOVED "PTZ CAMERAS" SP; REMOVED "PROJECT MANUAL" SP; REMOVED "RADAR DETECTION SYSTEM" SP; REMOVED "UNDERCUT BACKFILL" SP; EDITED "FIBER OPTIC FACILITIES" SP; EDITED "ROLLER COMPACTED CONCRETE PAVEMENT" SP; EDITED "SANITARY SEWER FACILITIES" SP; ADDED "CONCRETE PULL BOX (TYPE 4 HD)" SP, REMOVED SHEETS 31 THROUGH 58 FROM INDEX OF SHEETS, RENUMBERED ILLUMINATION SHEETS IN INDEX OF SHEETS, AND UPDATED REVISION DATE FOR ROADWAY STANDARD DRAWING TC-3 ON SHEET 2; REMOVED "DYNAMIC MESSAGING SYSTEM" SP, "ELECTRICAL METERING" SP, "PTZ CAMERAS" SP, "PROJECT MANUAL" SP, RADAR DETECTION SYSTEM" SP, "UNDERCUT BACKFILL" SP AND ADDED "CONCRETE PULL BOX (TYPE 4 HD) SP ON SHEET 3; ADDED CONCRETE ISLAND DETAIL, REVISED ROLLER COMPACTED CONCRETE PAVING DETAIL, AND PORTLAND CEMENT CONCRETE DRIVEWAY DETAIL ON SHEET 5; REMOVED "NO RIGHT TURN" SIGN (W/ ARROW) DETAIL, REMOVED "ONE WAY" SIGN DETAIL, AND ADJUSTED DUMPSTER PAD DETAIL ON SHEET 6; ADDED "TO BE PROVIDED AND INSTALLED BY OTHERS" NOTE TO ML40-TP275-2WB DETAIL ON SHEET 7; REMOVED "PHASE 1" TEXT AND UPDATED CURB ISLAND NUMBERS ON SHEET 8; REMOVED "PHASE 1" TEXT, UPDATED CURB ISLAND NUMBER, AND ADDED "FUTURE RESTROOM BUILDING NOT INCLUDED IN THIS CONTRACT" NOTE ON SHEET 9; ADDED SHEET 9A; REMOVED PHASE 1 AND PHASE 2 TEXT, REMOVED PHASING LINE, REMOVED PHASE 2 HATCHES FROM LEGEND, UPDATED HATCHING TO MATCH NEW LAYOUT, REMOVED AHP SUBSTATION CALLOUT, UPDATED WESTERN CURB AND GUTTER NORTHINGS AND EASTINGS ON SHEET 10; ADDED ANCHOR BOLT DETAIL AND REMOVED SANITARY SEWER CLEAN-OUT DETAIL ON SHEET 10A; REMOVED PHASE 1 AND PHASE 2 TEXT, REMOVED PHASING LINE, REMOVED AHP SUBSTATION CALLOUT, ADDED "FUTURE RESTROOM BUILDING NOT PART OF THIS CONTRACT" NOTE, AND ADJUSTED SAND BAG DITCH CHECKS TO NEW FLUME LOCATIONS ON SHEET 13; REMOVED PHASE 1 AND PHASE 2 TEXT, REMOVED PHASING LINE, REMOVED SIGNS ON WEST SIDE EXCEPT FOR "DO NOT ENTER" SIGNS, ADDED TWO "DO NOT ENTER" SIGNS TO EAST ENTRANCE, REMOVED "WIDE LOAD" MARKINGS, REMOVED AHP SUBSTATION CALLOUT, ADDED "FUTURE RESTROOM BUILDING NOT PART OF THIS CONTRACT" NOTE, AND ADJUSTED STRIPING LINEWORK AND QUANTITIES TO MATCH NEW LAYOUT ON SHEET 15; REMOVED PHASE 1 AND PHASE 2 TEXT, REMOVED PHASING LINE, AND ADJUSTED STRIPING TO MATCH NEW LAYOUT ON SHEET 16; UPDATED QUANTITY FOR THERMOPLASTIC PAVEMENT MARKING WHITE (6"), THERMOPLASTIC PAVEMENT MARKING WHITE (8"),THERMOPLASTIC PAVMENT MARKING ARROWS, REFLECTORIZED PAINT PAVEMENT MARKING WHITE (10"), CLEARING, GRUBBING, CONCRETE ISLAND, CONCRETE WALKS, CONCRETE COMBINATION CURB AND GUTTER (TYPE A) (1'6"), CONCRETE DITCH PAVING, SOLID SODDING, SEEDING, LIME, MULCH COVER, WATER, SECOND SEEDING APPLICATION, TEMPORARY SEEDING, SAND BAG DITCH CHECKS, ROCK DITCH CHECKS, SEDIMENT REMOVAL AND DISPOSAL, REMOVED QUANTITY FOR THERMOPLASTIC PAVEMENT MARKING WORDS, ADDED SOLID SODDING TO EROSION CONTROL, AND UPDATED LOCATION OF CONCRETE WALKS ON SHEET 17; UPDATED QUANTITY FOR GAS LINE, STANDARD SIGN, OMNI-DIRECTIONAL BREAKAWAY SIGN SUPPORTS (TYPE G-1), NON-METALLIC CONDUIT (1"), CONCRETE PULL BOX (TYPE 3 HD), PVC AWWA C900 CLASS 160 (1"), PVC AWWA C900 CLASS 160 (3"), PVC AWWA C900 CLASS 150 (6"), DUCTILE IRON FITTINGS, AGGREGATE IN CEMENT STABILIZED CRUSHED STONE BASE COURSE, CEMENT IN CEMENT STABILIZED CRUSHED STONE BASE COURSE, PROCESSING CEMENT STABILIZED CRUSHED STONE BASE COURSE, ROLLER COMPACTED CONCRETE PAVEMENT (8"), TYPE 8 GEOTEXTILE FABRIC, SANITARY SEWER FORCE MAIN (2 1/2"), SANITARY SEWER PIPE (PVC SDR-26) (6"), ELECTRICAL CONDUCTORS-IN-CONDUIT (2C/10), ELECTRICAL CONDUCTORS-IN-CONDUIT (2C/8), ELECTRICAL CONDUCTORS-IN-CONDUIT (2C/3), CONCRETE PULL BOX (TYPE 2 HD), 30" REINFORCED CONCRETE PIPE (CLASS III), 36" REINFORCED CONCRETE PIPE (CLASS III), UNCLASSIFIED EXCAVATION, COMPACTED EMBANKMENT, REMOVED QUANTITY FOR DYNAMIC MESSAGING SYSTEM, SANITARY SEWER PIPE (PVC SDR-26) (4"), SANITARY SEWER CLEANOUT (4"), ELECTRIC METER, PTZ CAMERAS, RADAR DETECTION SYSTEM, UNDERCUT BACKFILL, ADDED QUANTITIES FOR GATE VALVE (1"), GATE VALVE (3"), CONCRETE PULL BOX (TYPE 4 HD), ADJUSTED LOCATION OF DRIVEWAYS & TURNOUTS, AND REMOVED "NO RIGHT TURN" AND "ONE WAY (ARROW LEFT)" LINES FROM STANDARD SIGNS BLOCK ON SHEET 18; UPDATED SUMMARY OF QUANTITIES PER SHEET 17 AND 18 UPDATES, UPDATED QUANTITY FOR ELECTRICAL CONDUCTORS-IN-CONDUIT (2C/8 A.W.G., E.G.C.), ELECTRICAL CONDUCTORS-IN-CONDUIT (2C/6 A.W.G.), ELECTRICAL CONDUCTORS-IN-CONDUIT (2C/4 A.W.G., E.G.C.), ELECTRICAL CONDUCTORS-IN-CONDUIT (1C/6 A.W.G.), ELECTRICAL CONDUCTORS FOR LUMINAIRES, NON-METALLIC CONDUIT (2"), CONCRETE PULL BOX (TYPE 3 HD), AND REMOVED QUANTITY FOR AHP SUBSTATION, PUBLIC RESTROOM, AND PARKING DETECTION ON SHEET 19; REMOVED PHASE 1 AND PHASE 2 TEXT, REMOVED PHASING LINE, ADJUSTED CURB ISLAND SIZES AND LOCATIONS, ADDED CURB ISLANDS, UPDATED 30" AND 36" REINFORCED CONCRETE PIPE LOCATIONS AND LENGTHS, ADJUSTED FLUME LOCATIONS, REMOVED SELECT FLUMES, ADDED BOLLARDS TO THE HIGH MAST LIGHTS, AND REDUCED PAVEMENT FOOTPRINT BY APPROXIMATELY 15% ON WEST SIDE ON SHEET 23; REMOVED AHP SUBSTATION, ADJUSTED RESTROOM BUILDING LINEWORK FROM SOLID TO DASHED, ADDED "FUTURE RESTROOM BUILDING NOT PART OF THIS CONTRACT" NOTE, ADDED "FUTURE" TO GENERATOR PAD CALLOUT, AND ADJUSTED SIDEWALK ON SHEET 24; REMOVED PHASE 1 AND PHASE 2 TEXT, REMOVED PHASING LINE, REMOVED AHP SUBSTATION CALLOUT, ADDED "FUTURE" TO RESTROOM BUILDING CALLOUT, AND ADJUSTED GRADING TO MATCH NEW LAYOUT ON SHEET 25; REMOVED PHASE 1 AND PHASE 2 TEXT, REMOVED PHASING LINE, ADDED "FUTURE RESTROOM BUILDING NOT PART OF THIS CONTRACT" NOTE, AND ADJUSTED GRADING TO MATCH NEW LAYOUT ON SHEET 26; REMOVED PHASE 1 AND PHASE 2 TEXT, REMOVED PHASING LINE, REMOVED AHP SUBSTATION CALLOUT, ADDED "FUTURE" TO RESTROOM BUILDING CALLOUT, ADDED "FUTURE" TO NOTE 11 BEFORE "PTZ CAMERA", ADDED "FUTURE" TO NOTE 13 BEFORE "RADAR DETECTION SYSTEM", REMOVED NOTE 15, REMOVED NOTE 16, ADDED "PURCHASE" TO NOTE C BEFORE "CONNECT", ADDED NOTE E, ADDED NOTE F, AND ADJUSTED UTILITIES TO MATCH NEW LAYOUT ON SHEET 27; REMOVED PHASE 1 AND PHASE 2 TEXT, REMOVED PHASING LINE, REMOVED NOTE 7, REMOVED "(REFER TO ARCHITECTURAL PLANS)" FROM NOTE 13, ADDED GENERAL NOTE D, ADDED "FUTURE AHP SUBSTATION NOT IN THIS CONTRACT" CALLOUT, UPDATED NOTE 7, UPDATED NOTE 8, UPDATED NOTE 15, ADDED NOTE E, ADDED NOTE F, AND ADJUSTED UTILITIES TO MATCH NEW LAYOUT ON SHEET 28; REMOVED PHASE 1 AND PHASE 2 TEXT AND REMOVED PHASING LINE ON SHEET 29. UPDATED QUANTITY FOR ELECTRICAL CONDUCTORS-IN-CONDUIT (2C/8 A.W.G., E.G.C.), ELECTRICAL CONDUCTORS-IN-CONDUIT (2C/6 A.W.G.), ELECTRICAL CONDUCTORS-IN-CONDUIT (2C/4 A.W.G., E.G.C.), ELECTRICAL CONDUCTORS-IN-CONDUIT (1C/6 A.W.G.), ELECTRICAL CONDUCTORS FOR LUMINAIRES, NON-METALLIC CONDUIT (2"), CONCRETE PULL BOX (TYPE 3 HD) ON SHEET 31; UPDATED COORDINATES OF LUMINAIRES ON SHEET 32, UPDATED LIGHTING AND ELECTRICAL LOCATIONS TO MATCH NEW LAYOUT ON SHEET 33; UPDATED LIGHTING AND ELECTRICAL LOCATIONS TO MATCH NEW LAYOUT ON SHEET 34; UPDATED LIGHTING AND ELECTRICAL LOCATIONS TO MATCH NEW LAYOUT ON SHEET 35; PROVIDED REVISED TC-3	1-42

REVISIONS (BLOCK 3 OF 3)

DATE	REVISION	SHEET NUMBER
11/19/2021	UPDATED TOTAL SHEET NUMBER ON ALL SHEETS; REVISED FIBER OPTIC FACILITIES SP; UPDATED PROJECT NAME ON SHEET 1; ADDED CONDUIT DIAGRAM TO SHEET INDEX AND ADDED SD-6 AND SD-9 TO ROADWAY STANDARD DRAWINGS TABLE TO SHEET 2; REVISED LOCATIONS OF FIBER OPTIC AND ELECTRICAL PULL BOXES ON SHEET 10; REVISED LOCATIONS OF FIBER OPTIC AND ELECTRICAL PULL BOXES ON SHEET 13; REVISED LOCATIONS OF FIBER OPTIC AND ELECTRICAL PULL BOXES ON SHEET 15; REVISED LOCATIONS OF FIBER OPTIC AND ELECTRICAL PULL BOXES SHEET 16; REVISED ADVANCED WARNING SIGNS AND DEVICES QUANTITY BOX AND TOTALS, REVISED CONSTRUCTION PAVEMENT MARKINGS AND PERMANENT PAVEMENT MARKINGS TABLE ON SHEET 17; REVISED FORMATING ON STRCUTURES QUANTITY TABLE, REVISED STANDARD SIGNS - SHEET ALUMINUM 0.100" THICKNESS (5 SQ. FT. OR LESS) TOTAL, REVISED "TOTALS" TO "TOTAL" IN DRIVEWAY & TURNOUTS QUANTITY TABLE, REVISED GAS QUANTITY TABLE TOTALS, REVISED ELECTRICAL QUANTITY BOX TOTALS AND LINE ITEMS, ADDED QUANTITY BOX FOR PTZ CAMERA AND RADAR DETECTION SYSTEM CONDUIT INSTALLATION, REVISED FIBER OPTIC QUANTITY BOX TITLE AND TOTALS ON SHEET 18; REVISED QUANTITIES FOR SIGNS PAY ITEM, STANDARD SIGN PAY ITEM, WATER PAY ITEM, SOLID SODDING PAY ITEM, ELECTRICAL CONDUCTORS-IN-CONDUIT (2C/8 A.W.G., E.G.C.) PAY ITEM, ELECTRICAL CONDUCTORS-IN-CONDUIT (2C/4 A.W.G., E.G.C.) PAY ITEM, ELECTRICAL CONDUCTORS-IN-CONDUIT (1C/9 A.W.G.), CONCRETE PULL BOX (TYPE 2 HD) PAY ITEM, CONCRETE PULL BOX (TYPE 3 HD) PAY ITEM, CONCRETE PULL BOX (TYPE 4 HD) PAY ITEM ON SHEET 19; REMOVED ELECTRICAL CONDUCTORS-IN-CONDUIT (2C/10 A.W.G., E.G.C.) PAY ITEM, ELECTRICAL CONDUCTORS-IN-CONDUIT (2C/3 A.W.G., E.G.C.) PAY ITEM, NON-METALLIC CONDUIT (1") PAY ITEM, TRAFFIC SIGNAL PEDESTAL POLE WITH FOUNDATION PAY ITEM, AND REVISED TITLE OF TRAFFIC SIGNAL MAST ARM AND POLE WITH FOUNDATION PAY ITEM TO INCLUDE HEIGHT OF 0' SHEET 19; ADDED SP & 710 NON-METALLIC CONDUIT (2") PAY ITEM, SS & 714 TRAFFIC SIGNAL MAST ARM AND POLE WITH FOUNDATION (0') PAY ITEM ON SHEET 19; UPDATED PROJECT NAME ON SHEET 20; REVISED LOCATIONS OF FIBER OPTIC AND ELECTRICAL PULL BOXES AND REVISED PTZ CAMERA AND RADAR DETECTION TRAFFIC SIGNAL MAST ARM CALLOUTS ON SHEET 23; REVISED LOCATIONS OF FIBER OPTIC AND ELECTRICAL PULL BOXES AND REVISED FIBER OPTIC AND ELECTRICAL PULL BOX CALLOUTS ON SHEET 24; REVISED LOCATIONS OF FIBER OPTIC AND ELECTRICAL PULL BOXES ON SHEET 25; REVISED LOCATIONS OF FIBER OPTIC AND ELECTRICAL PULL BOXES AND REMOVED CALLOUTS FOR PULL BOXES, FUTURE GENERATOR PAD, SERVICE POINT, AND TRANSFORMER PAD ON SHEET 26; REVISED LOCATIONS OF FIBER OPTIC AND ELECTRICAL PULL BOXES, REVISED NOTE "D" OF GENERAL NOTES, ADDED NOTES "G" AND "H" TO GENERAL NOTES, AND REVISED UTILITY NOTES AND CALLOUTS ON SHEET 27; REVISED LOCATIONS OF FIBER OPTIC AND ELECTRICAL PULL BOXES, REVISED NOTE "D" OF GENERAL NOTES, ADDED NOTES "G" AND "H" TO GENERAL NOTES, AND REMOVED ITEMS 7 AND 8 FROM UTILITY NOTES AND RENUMBERED NOTES AND CALLOUTS ON SHEET 28; ADDED SHEET FOR THIRD REVISION BLOCK (SHEET 19A); ADDED CONDUIT DIAGRAM SHEETS AFTER UTILITY PLAN SHEETS	1-46
12/17/2021	REVISED SWPPP SP; ADDED JOB NUMBER TO MANDATORY ELECTRONIC DOCUMENT SUBMITTAL SP, SOIL STABILIZATION SP, AND SHORING FOR CULVERTS SP; RENUMBERED ALL SHEETS; REVISED SHEET INDEX ON SHEET 2; REMOVED COLD MILLING NOTES FROM GENERAL NOTES ON SHEET 3; REVISED SPELLING OF "DUCTILE" IN WATER QUANTITIES BOX AND REMOVED DYNAMIC MESSAGING SYSTEM PAY ITEM FROM MAIN LANES ROADSIDE MOUNTED SIGNING QUANTITIES BOX ON SHEET 21; SEPARATED TRAFFIC SIGNAL MAST ARM AND POLE WITH FOUNDATION (30') PAY ITEM INTO TWO SEPARATE PAY ITEMS FOR 30' AND 50' POLES ON SHEET 22	1-49

STATE OF ARKANSAS REGISTERED PROFESSIONAL ENGINEER No. 10479 BRENT L. MASSEY 12/17/2021

SURVEY CONTROL COORDINATES

Project Name: 110800 I-40 TRUCK PARKING EXPANSION PROJECT (PH. I) (WEST MEMPHIS) (S)
Date: 9/16/2020
Coordinate System: ARKANSAS STATE PLANE - NORTH ZONE BASED ON GPS CONTROL,
PROJECTED TO GROUND.
Units: U.S. SURVEY FOOT

Point Name	Northing	Easting	Elev	Feature	Description
1	303840.6373	1837601.8970	211.796	CTL	ARDOT STD MON STAMPED PN:1 W.MEMPHIS
2	304036.1827	1838109.3406	211.788	CTL	ARDOT STD MON STAMPED PN:2
3	304237.3290	1838614.7011	211.591	CTL	ARDOT STD MON STAMPED PN:3
4	304210.3172	1838024.2566	212.813	CTL	ARDOT STD MON STAMPED PN:4 W.MEMPHIS
5	304341.4312	1837777.9132	211.724	CTL	ARDOT STD MON STAMPED PN:5 W.MEMPHIS
6	304478.5178	1837969.0271	212.132	CTL	ARDOT STD MON STAMPED PN:6 W.MEMPHIS
7	304605.6739	1838268.8410	209.641	CTL	ARDOT STD MON STAMPED PN:7 W.MEMPHIS
100	300872.4931	1832103.3244	210.025	GPS	ARDOT GPS MON 180014
101	308075.7204	1833842.9613	212.416	GPS	ARDOT GPS MON 180016A

*Note - Rebar and Cap - Standard - 5/8" Rebar with 2" Aluminum Cap stamped
*(standard markings common to all caps), or as indicated
(other markings indicated in the point description of the individual point).
USE CAF = 1.0 FOR STAKEOUT FOR THIS PROJECT
A PROJECT CAF OF .9999535122 HAS BEEN USED TO COMPUTE THE ABOVE GROUND COORDINATES.
THIS CAF IS INTENDED FOR USE WITHIN THE PROJECT LIMITS.
GRID DISTANCE = GROUND DISTANCE X CAF.
GRID COORDINATES ARE STORED UNDER FILE NAME.XXXCTL
HORIZONTAL DATUM: NAD 83 (2011)
VERTICAL DATUM: NAVD 88 POSITIONAL ACCURACY THIRD ORDER, UNLESS SPECIFIED OTHERWISE
AT A SPECIFIC POINT.

REFERENCE POINTS (1500 SERIES) ARE TO BE USED TO ESTABLISH CONTROL
IF THE PRIMARY CONTROL POINTS LISTED ABOVE HAVE BEEN DESTROYED.
REFERENCE POINTS ARE NOT TO BE USED FOR VERTICAL CONTROL

BASIS OF BEARING:
ARKANSAS STATE PLANE GRID BEARINGS - 0301-NORTH ZONE
DETERMINED FROM GPS CONTROL POINTS: 180014 & 180016A
CONVERGENCE ANGLE:01 01 23.6 RIGHT AT LAT N 35-09-22.2711 LON W 90-14-29.6137
GRID AZIMUTH = ASTRONOMICAL AZIMUTH - CONVERGENCE ANGLE.

DATE REVISED	DATE FILMED	DATE REVISED	DATE FILMED	FED.RD. DIST.NO.	STATE	FED. AID PROJ. NO.	SHEET NO.	TOTAL SHEETS
09-16-21				6	ARK.			
11-19-21				JOB NO.		110800	25	49
12-17-21								

(2) SURVEY CONTROL DETAILS

STATE OF ARKANSAS REGISTERED PROFESSIONAL ENGINEER No. 10479 BRENT L. MASSEY 12/17/2021

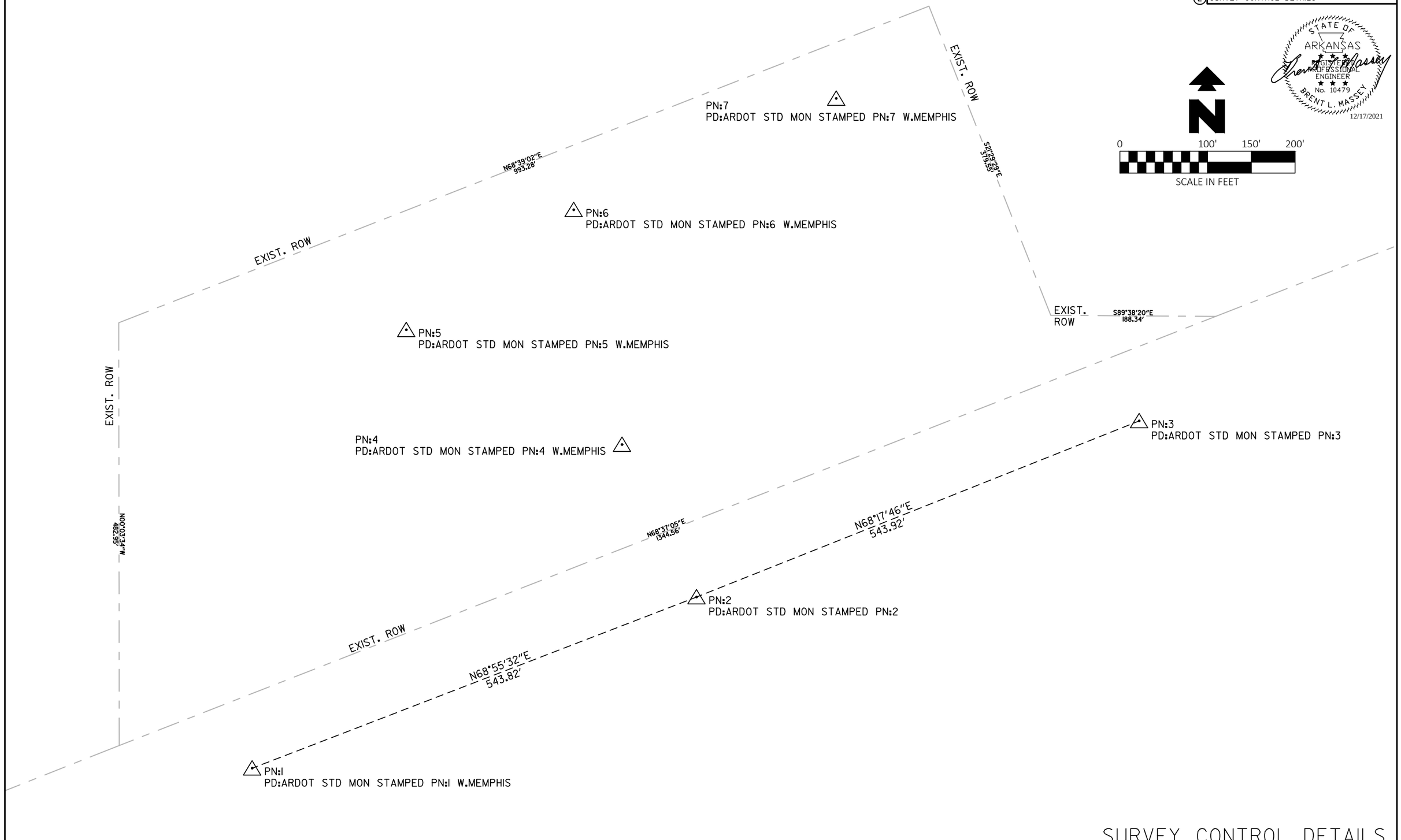

SURVEY CONTROL DETAILS

3944 - CTRL.dgn 12/15/2021

DATE REVISED	DATE FILMED	DATE REVISED	DATE FILMED	FED. RD. DIST. NO.	STATE	FED. AID PROJ. NO.	SHEET NO.	TOTAL SHEETS
06-04-21		12-17-21		6	ARK.			
09-16-21				JOB NO.		110800	26	49
11-19-21								

(2) DEMOLITION PLAN

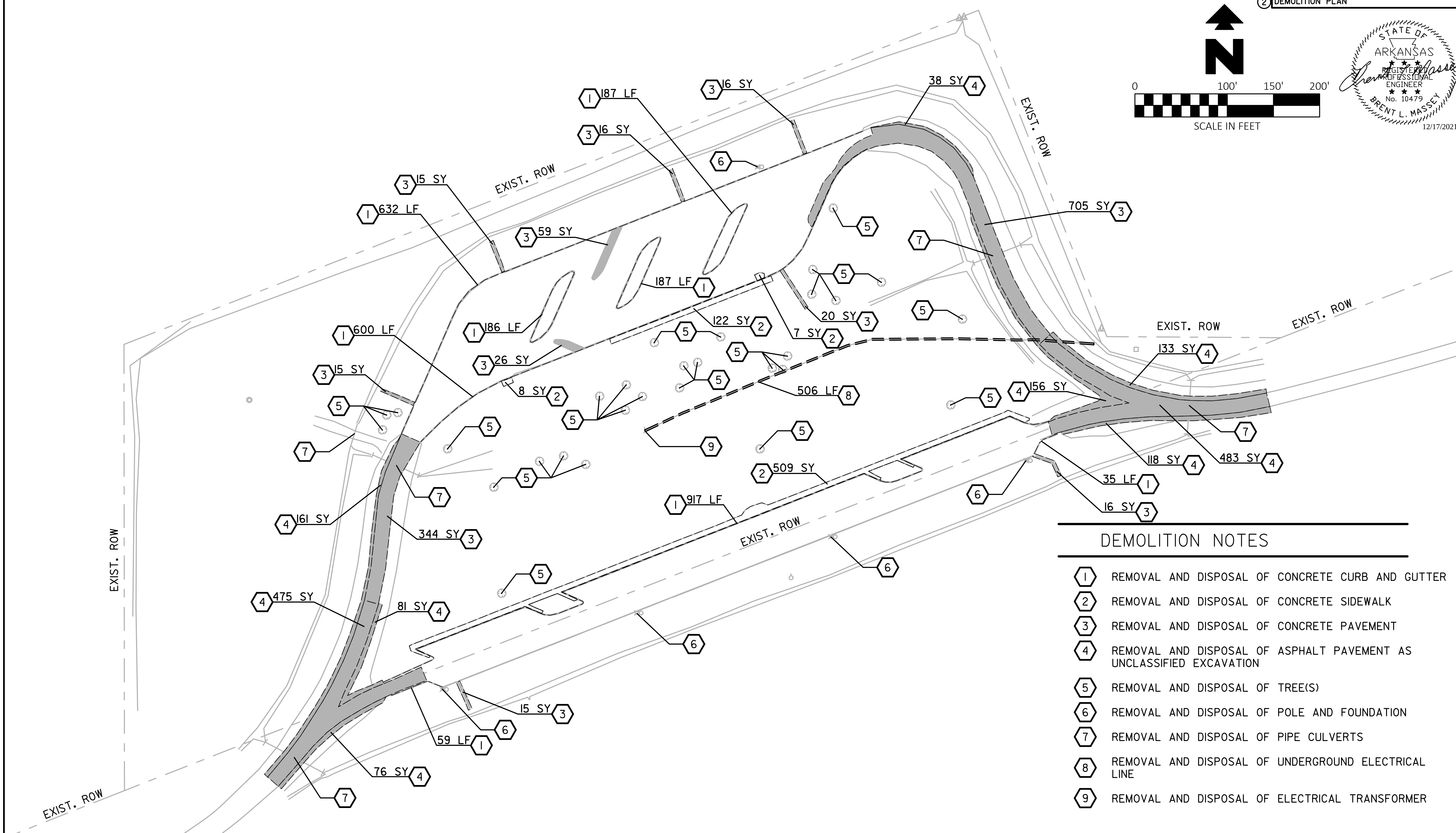

DEMOLITION NOTES

1. REMOVAL AND DISPOSAL OF CONCRETE CURB AND GUTTER
2. REMOVAL AND DISPOSAL OF CONCRETE SIDEWALK
3. REMOVAL AND DISPOSAL OF CONCRETE PAVEMENT
4. REMOVAL AND DISPOSAL OF ASPHALT PAVEMENT AS UNCLASSIFIED EXCAVATION
5. REMOVAL AND DISPOSAL OF TREE(S)
6. REMOVAL AND DISPOSAL OF POLE AND FOUNDATION
7. REMOVAL AND DISPOSAL OF PIPE CULVERTS
8. REMOVAL AND DISPOSAL OF UNDERGROUND ELECTRICAL LINE
9. REMOVAL AND DISPOSAL OF ELECTRICAL TRANSFORMER

DEMOLITION PLAN

12/15/2021

31944 - DEMO.dgn

DATE REVISED	DATE FILMED	DATE REVISED	DATE FILMED	FED.RD. DIST.NO.	STATE	FED. AID PROJ. NO.	SHEET NO.	TOTAL SHEETS
06-04-21		12-17-21		6	ARK.			
09-16-21				JOB NO.		110800	27	49
11-19-21								

(2) SITE PLAN

STATE OF ARKANSAS REGISTERED PROFESSIONAL ENGINEER No. 10479 BRENT L. MASSEY 12/17/2021

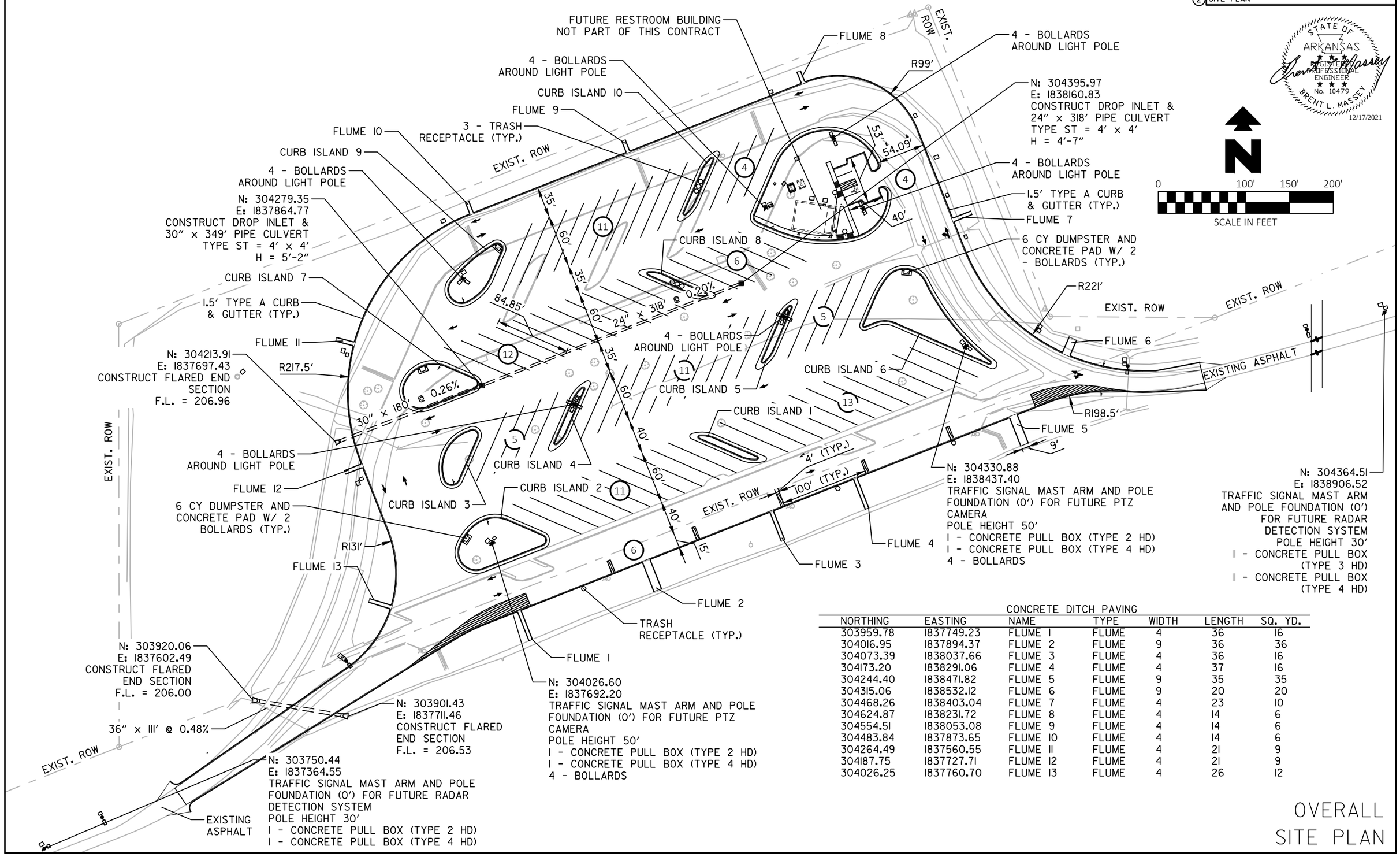

CONCRETE DITCH PAVING

NORTHING	EASTING	NAME	TYPE	WIDTH	LENGTH	SQ. YD.
303959.78	1837749.23	FLUME 1	FLUME	4	36	16
304016.95	1837894.37	FLUME 2	FLUME	9	36	36
304073.39	1838037.66	FLUME 3	FLUME	4	36	16
304173.20	1838291.06	FLUME 4	FLUME	4	37	16
304244.40	1838471.82	FLUME 5	FLUME	9	35	35
304315.06	1838532.12	FLUME 6	FLUME	9	20	20
304468.26	1838403.04	FLUME 7	FLUME	4	23	10
304624.87	1838231.72	FLUME 8	FLUME	4	14	6
304554.51	1838053.08	FLUME 9	FLUME	4	14	6
304483.84	1837873.65	FLUME 10	FLUME	4	14	6
304264.49	1837560.55	FLUME 11	FLUME	4	21	9
304187.75	1837727.71	FLUME 12	FLUME	4	21	9
304026.25	1837760.70	FLUME 13	FLUME	4	26	12

OVERALL SITE PLAN

12/15/2021

31944 - SP.dgn

DATE REVISED	DATE FILMED	DATE REVISED	DATE FILMED	FED.RD. DIST.NO.	STATE	FED. AID PROJ. NO.	SHEET NO.	TOTAL SHEETS
06-04-21		12-17-21		6	ARK.			
09-16-21				JOB NO.		110800	28	49
11-19-21								

(2) SITE PLAN

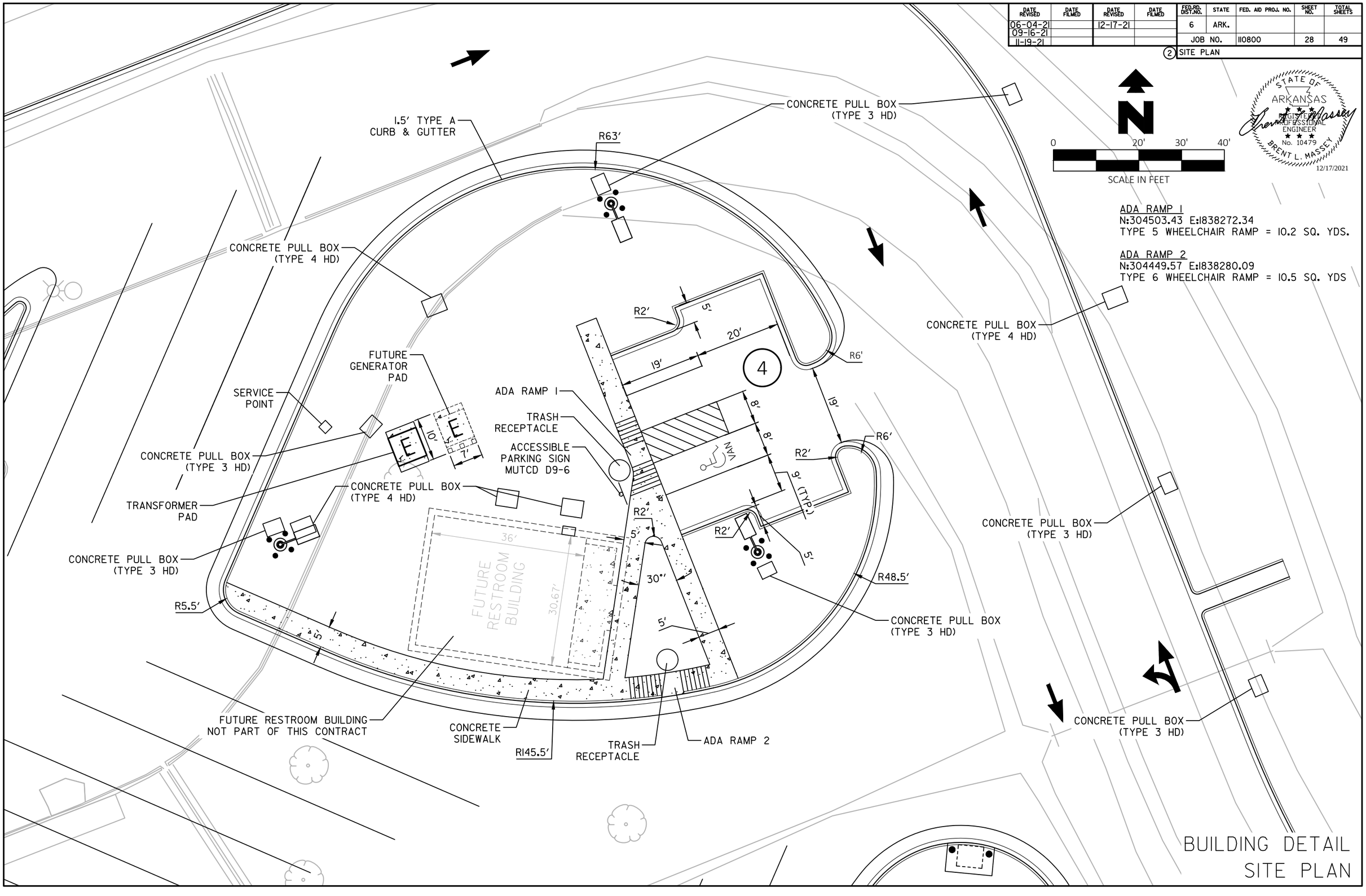

12/15/2021

31944 - SP.dgn

DATE REVISED	DATE FILMED	DATE REVISED	DATE FILMED	FED.RD. DIST.NO.	STATE	FED. AID PROJ. NO.	SHEET NO.	TOTAL SHEETS
06-04-21		12-17-21		6	ARK.			
09-16-21				JOB NO.		110800	29	49
11-19-21								

(2) GRADING PLAN

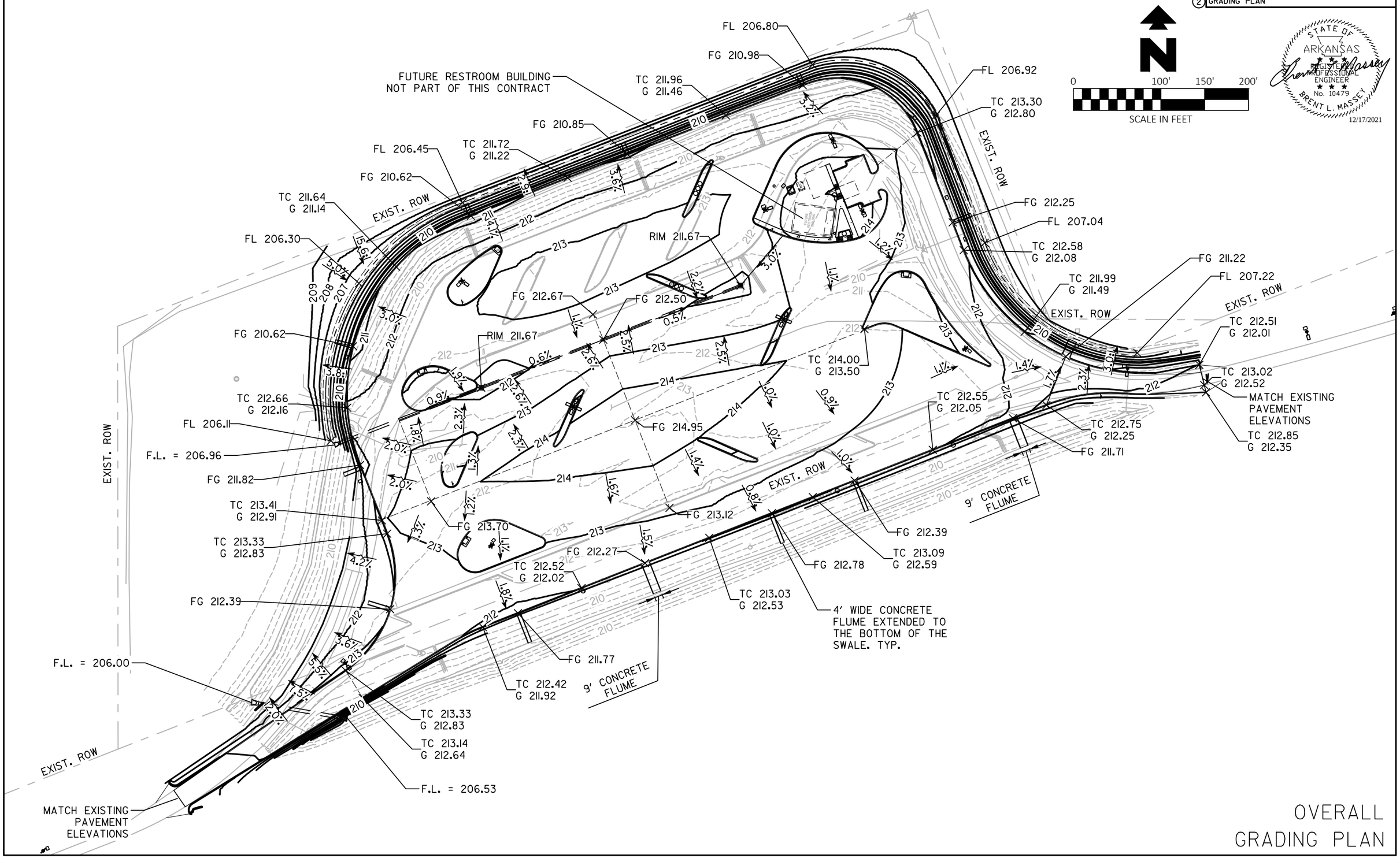

OVERALL
GRADING PLAN

12/15/2021

31944 - GP.dgn

DATE REVISED	DATE FILMED	DATE REVISED	DATE FILMED	FED.RD. DIST.NO.	STATE	FED. AID PROJ. NO.	SHEET NO.	TOTAL SHEETS
06-04-21		12-17-21		6	ARK.			
09-16-21				JOB NO.		110800	30	49
11-19-21								

(2) GRADING PLAN

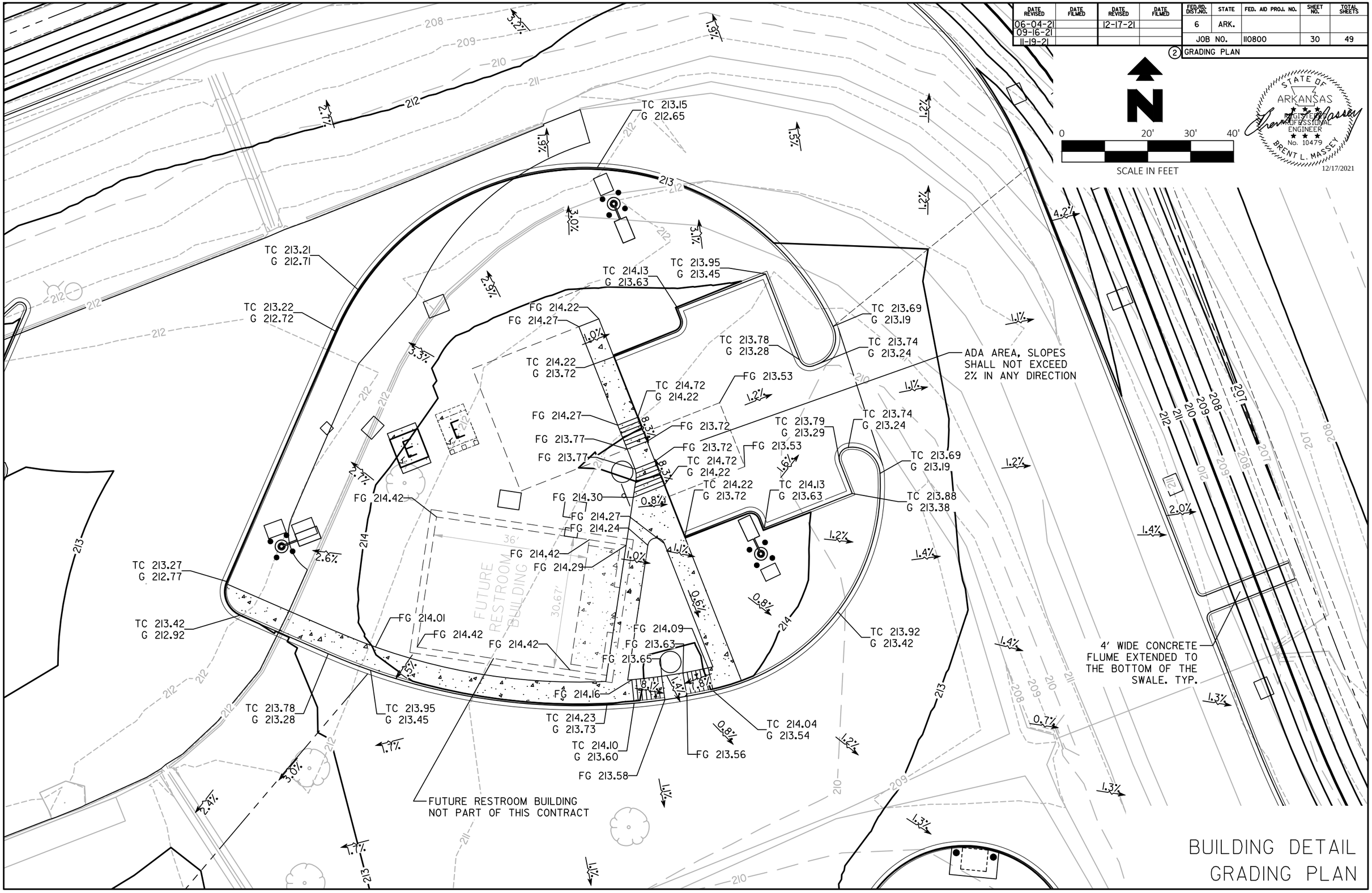

12/15/2021

31944 - GP.dgn

DATE REVISED	DATE FILMED	DATE REVISED	DATE FILMED	FED.RD. DIST.NO.	STATE	FED. AID PROJ. NO.	SHEET NO.	TOTAL SHEETS
05-06-21		11-19-21		6	ARK.			
06-04-21		12-17-21		JOB NO.		110800	31	49
09-16-21				(2) UTILITY PLAN				

GENERAL NOTES

A. ALL FIBER OPTIC CABLE TO BE RUN IN SCHEDULE 40 PVC CONDUIT. SIZE SPECIFIED ON PLANS.

B. ALL UNDERGROUND ELECTRIC CABLE TO BE RUN IN SCHEDULE 40 PVC CONDUIT. SIZE SPECIFIED ON PLANS. (REFER TO LIGHTING PLAN)

C. ARDOT TO PURCHASE, CONNECT AND INSTALL CAMERA AND RADAR EQUIPMENT.

D. CONTRACTOR TO PROVIDE TRACER WIRE ON FIBER CONDUIT.

E. ARDOT TO PROVIDE AND PULL ALL FIBER OPTIC CABLE, PTZ CAMERA CABLE, AND RADAR DETECTION SYSTEM CABLE.

F. CONTRACTOR TO VERIFY EXISTING WATER SERVICE LINE IS IN WORKING ORDER AND WILL BE RESPONSIBLE FOR REPAIRS PRIOR TO CONNECTING ON TO IT.

G. ALL CONDUIT ENDS IN PULL BOXES AND ALL CONDUIT EXPOSED TO WEATHER FOR FUTURE PTZ CAMERA CABLE AND RADAR DETECTION SYSTEM SHALL BE SEALED AND CAPPED FOR A FUTURE PHASE OF CONSTRUCTION.

H. ALL NON-METALLIC CONDUIT RUNS SHALL HAVE BELL RING FITTINGS INSTALLED ON THE TERMINATING ENDS OF THE CONDUIT. THIS INCLUDES PULL BOXES, POLE BASES, AND CABINETS.

RESOURCE LIST

1. NATURAL GAS: CENTERPOINT ENERGY - 501-454-1308
2. SANITARY SEWER: WEST MEMPHIS UTILITIES - 870-702-5153
3. ELECTRIC: WEST MEMPHIS UTILITIES - 870-702-5131
4. WATER: WEST MEMPHIS UTILITIES - 870-702-5153

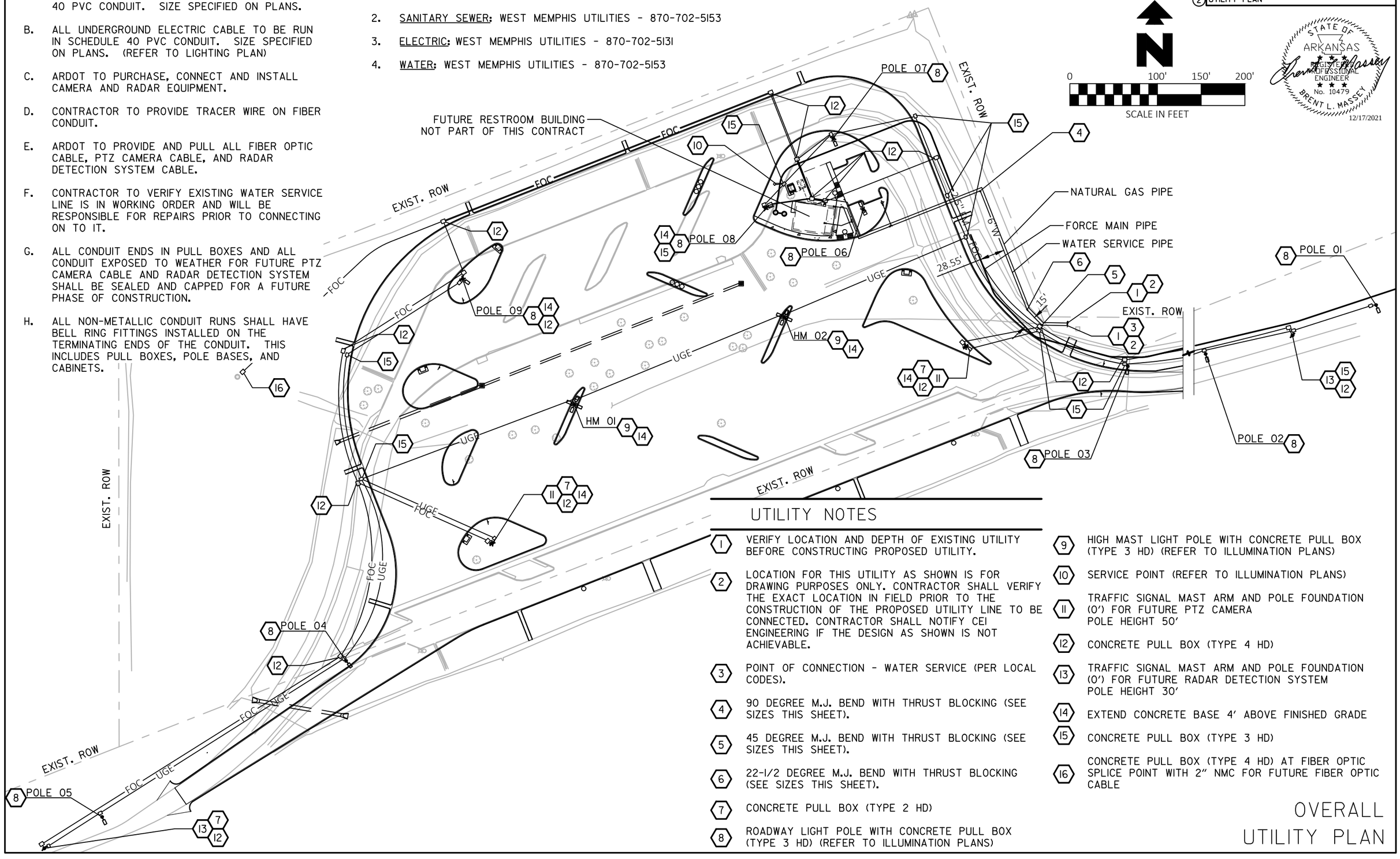

UTILITY NOTES

(1) VERIFY LOCATION AND DEPTH OF EXISTING UTILITY BEFORE CONSTRUCTING PROPOSED UTILITY.

(2) LOCATION FOR THIS UTILITY AS SHOWN IS FOR DRAWING PURPOSES ONLY. CONTRACTOR SHALL VERIFY THE EXACT LOCATION IN FIELD PRIOR TO THE CONSTRUCTION OF THE PROPOSED UTILITY LINE TO BE CONNECTED. CONTRACTOR SHALL NOTIFY CEI ENGINEERING IF THE DESIGN AS SHOWN IS NOT ACHIEVABLE.

(3) POINT OF CONNECTION - WATER SERVICE (PER LOCAL CODES).

(4) 90 DEGREE M.J. BEND WITH THRUST BLOCKING (SEE SIZES THIS SHEET).

(5) 45 DEGREE M.J. BEND WITH THRUST BLOCKING (SEE SIZES THIS SHEET).

(6) 22-1/2 DEGREE M.J. BEND WITH THRUST BLOCKING (SEE SIZES THIS SHEET).

(7) CONCRETE PULL BOX (TYPE 2 HD)

(8) ROADWAY LIGHT POLE WITH CONCRETE PULL BOX (TYPE 3 HD) (REFER TO ILLUMINATION PLANS)

(9) HIGH MAST LIGHT POLE WITH CONCRETE PULL BOX (TYPE 3 HD) (REFER TO ILLUMINATION PLANS)

(10) SERVICE POINT (REFER TO ILLUMINATION PLANS)

(11) TRAFFIC SIGNAL MAST ARM AND POLE FOUNDATION (0') FOR FUTURE PTZ CAMERA POLE HEIGHT 50'

(12) CONCRETE PULL BOX (TYPE 4 HD)

(13) TRAFFIC SIGNAL MAST ARM AND POLE FOUNDATION (0') FOR FUTURE RADAR DETECTION SYSTEM POLE HEIGHT 30'

(14) EXTEND CONCRETE BASE 4' ABOVE FINISHED GRADE

(15) CONCRETE PULL BOX (TYPE 3 HD)

(16) CONCRETE PULL BOX (TYPE 4 HD) AT FIBER OPTIC SPLICE POINT WITH 2" NMC FOR FUTURE FIBER OPTIC CABLE

OVERALL UTILITY PLAN

12/15/2021

31944 - UP.dgn

DATE REVISED	DATE FILMED	DATE REVISED	DATE FILMED	FED.RD. DIST.NO.	STATE	FED. AID PROJ. NO.	SHEET NO.	TOTAL SHEETS
05-06-21		09-16-21		6	ARK.			
06-04-21		11-19-21		JOB NO.		110800	32	49
06-23-21		12-17-21						

(2) UTILITY PLAN

UTILITY NOTES

1. WATER SERVICE PLUG (SEE SIZES THIS SHEET).
2. M.J. GATE VALVE WITH ADJUSTABLE VALVE BOX (SEE SIZES THIS SHEET).
3. M.J. TEE WITH THRUST BLOCKING (SEE SIZES THIS SHEET).
4. M.J. REDUCER (SEE SIZES THIS SHEET).
5. FIRE HYDRANT ASSEMBLY (PER LOCAL CODES).
6. WATER METER IS LOCATED AT COLLEGE BLVD. CONTRACTOR TO TEST IT OR INSTALL A NEW ONE (PER LOCAL CODES).
7. GRINDER PUMP STATION.
8. 4' INSIDE DIAMETER SANITARY SEWER MANHOLE W/ INLINE GRINDER
9. PROPOSED 4'x4' TRANSFORMER PAD
10. FUTURE POINT OF CONNECTION FOR ELECTRICAL SERVICE (PER ELECTRIC COMPANY REQUIREMENTS).
11. FUTURE GENERATOR AND PAD LOCATION.
12. GAS SERVICE PER LOCAL GAS COMPANY.
13. FUTURE GAS METER.

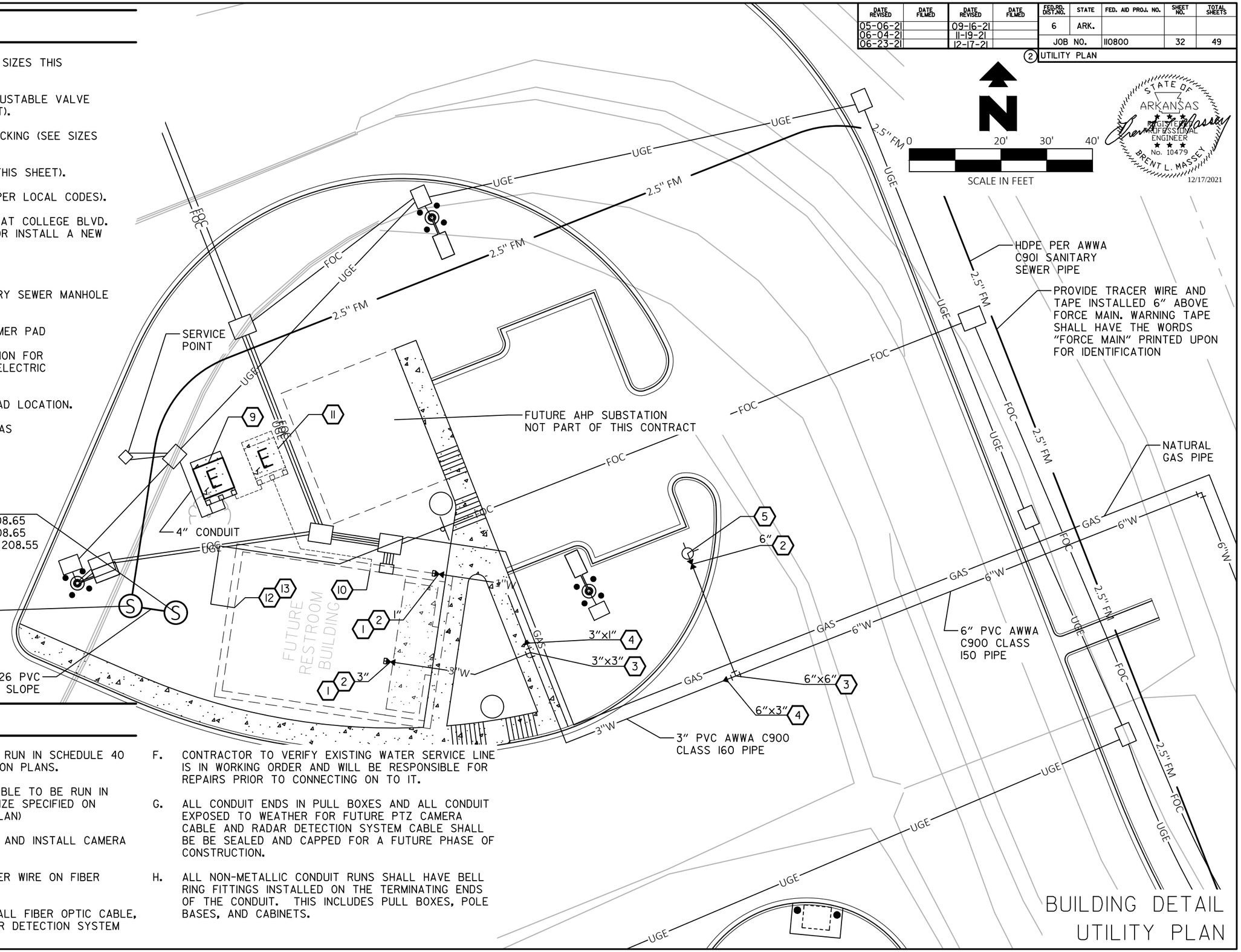

GENERAL NOTES

A. ALL FIBER OPTIC CABLE TO BE RUN IN SCHEDULE 40 PVC CONDUIT. SIZE SPECIFIED ON PLANS.

B. ALL UNDERGROUND ELECTRIC CABLE TO BE RUN IN SCHEDULE 40 PVC CONDUIT. SIZE SPECIFIED ON PLANS. (REFER TO LIGHTING PLAN)

C. ARDOT TO PURCHASE, CONNECT AND INSTALL CAMERA AND RADAR EQUIPMENT.

D. CONTRACTOR TO PROVIDE TRACER WIRE ON FIBER CONDUIT.

E. ARDOT TO PROVIDE AND PULL ALL FIBER OPTIC CABLE, PTZ CAMERA CABLE, AND RADAR DETECTION SYSTEM CABLE.

F. CONTRACTOR TO VERIFY EXISTING WATER SERVICE LINE IS IN WORKING ORDER AND WILL BE RESPONSIBLE FOR REPAIRS PRIOR TO CONNECTING ON TO IT.

G. ALL CONDUIT ENDS IN PULL BOXES AND ALL CONDUIT EXPOSED TO WEATHER FOR FUTURE PTZ CAMERA CABLE AND RADAR DETECTION SYSTEM CABLE SHALL BE BE SEALED AND CAPPED FOR A FUTURE PHASE OF CONSTRUCTION.

H. ALL NON-METALLIC CONDUIT RUNS SHALL HAVE BELL RING FITTINGS INSTALLED ON THE TERMINATING ENDS OF THE CONDUIT. THIS INCLUDES PULL BOXES, POLE BASES, AND CABINETS.

BUILDING DETAIL UTILITY PLAN

12/15/2021

31944 - UP.dgn

DATE REVISED	DATE FILMED	DATE REVISED	DATE FILMED	FED.RD. DIST.NO.	STATE	FED. AID PROJ. NO.	SHEET NO.	TOTAL SHEETS
05-06-21		11-19-21		6	ARK.			
06-04-21		12-17-21		JOB NO.		110800	33	49
09-16-21								

2 UTILITY PLAN

RESOURCE LIST

1. NATURAL GAS: CENTERPOINT ENERGY - 501-454-1308
2. SANITARY SEWER: WEST MEMPHIS UTILITIES - 870-702-5153
3. ELECTRIC: WEST MEMPHIS UTILITIES - 870-702-5131
4. WATER: WEST MEMPHIS UTILITIES - 870-702-5153

N

0 200' 300' 400'

SCALE IN FEET

STATE OF ARKANSAS REGISTERED PROFESSIONAL ENGINEER No. 10479 BRENT L. MASSEY

12/17/2021

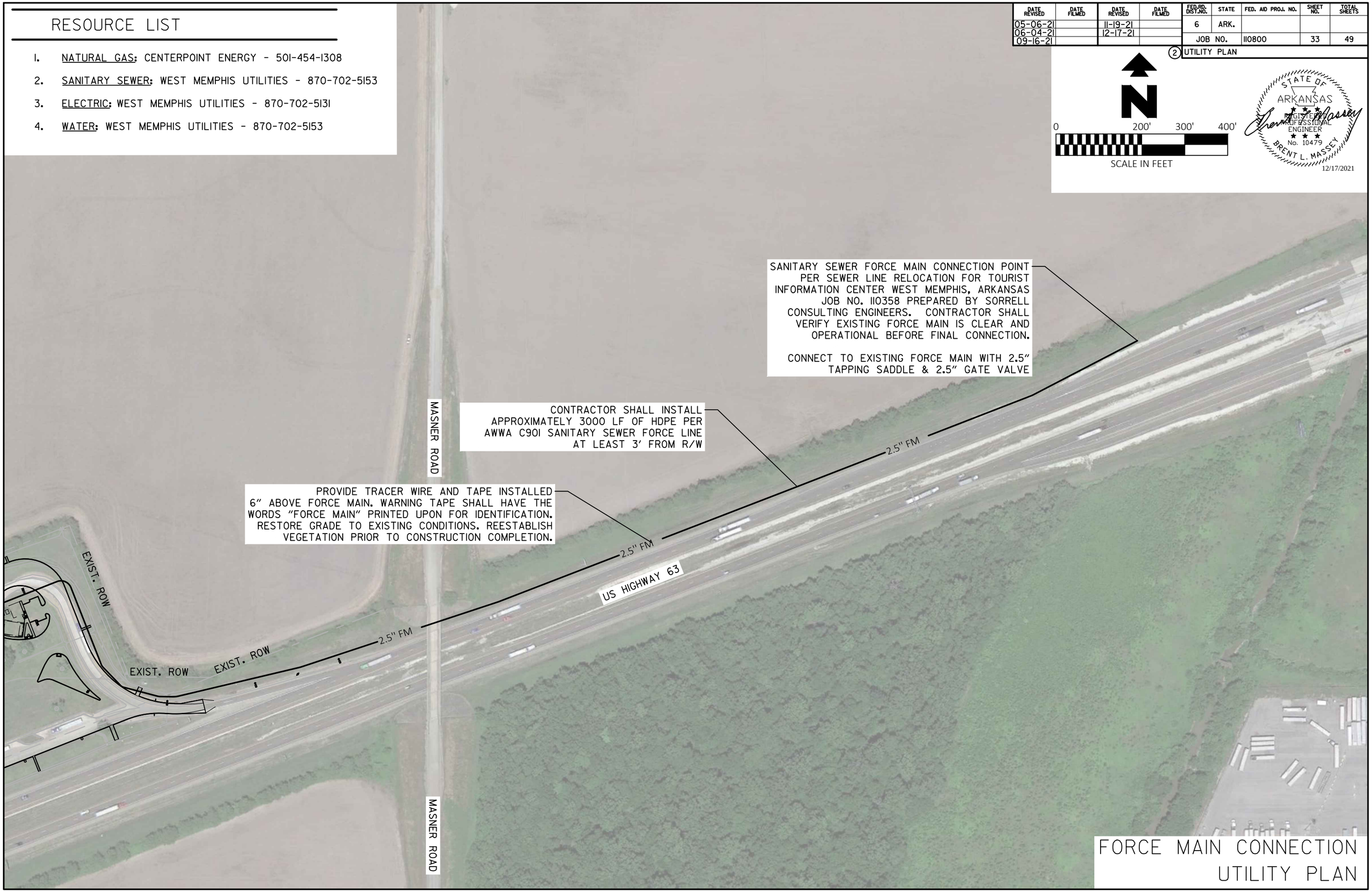

FORCE MAIN CONNECTION
UTILITY PLAN

31944 - UP.dgn 12/15/2021

DATE REVISED	DATE REVISED	FED.RD. DIST.NO.	STATE	JOB NO.	SHEET NO.	TOTAL SHEETS
11-19-21		6	ARK.	110800	34	49
12-17-21		CONDUIT DIAGRAM				

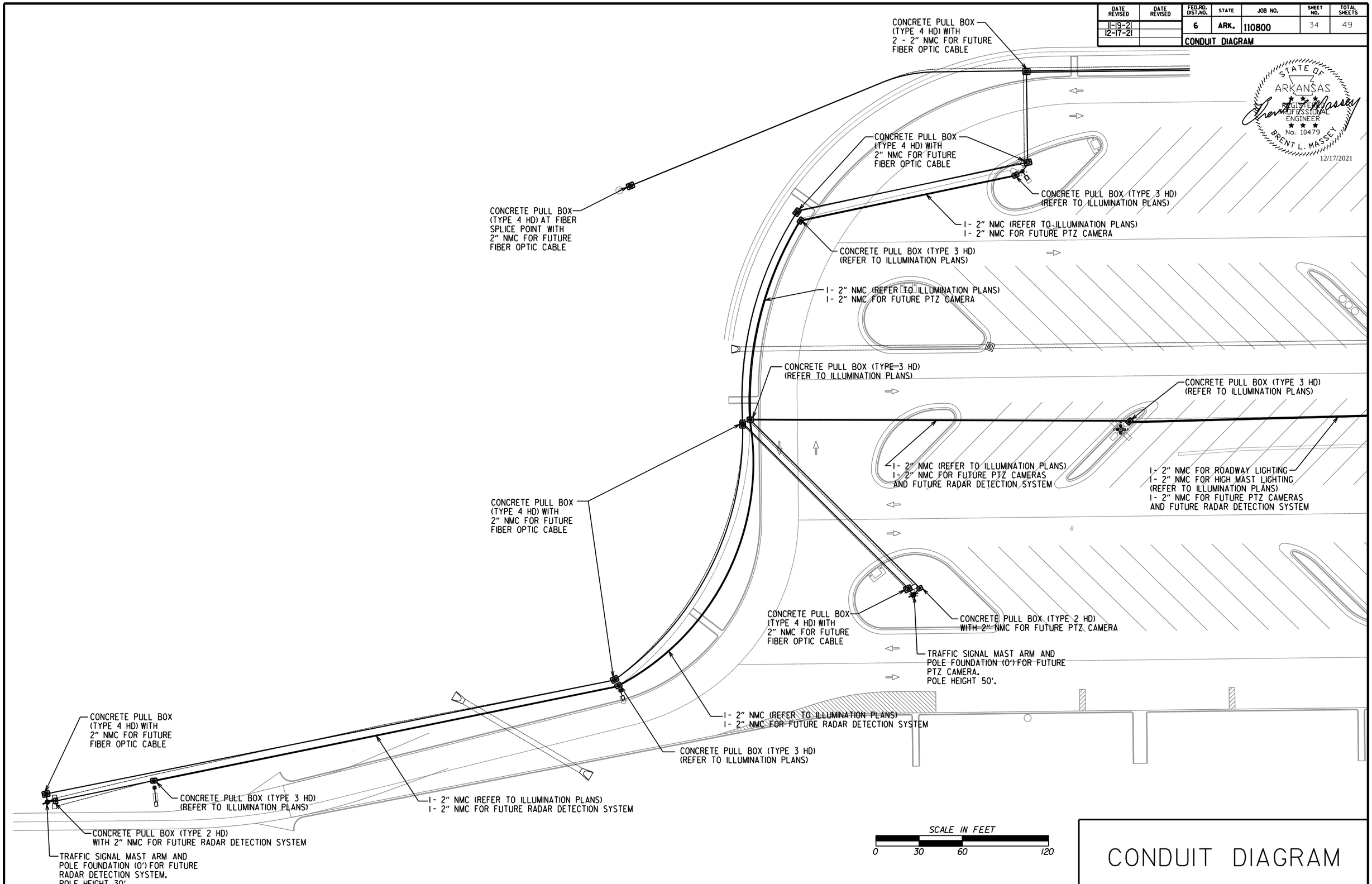

CONDUIT DIAGRAM

T110800_COMMENTS_02N/2021

DATE REVISED	DATE REVISED	FED.RD. DIST.NO.	STATE	JOB NO.	SHEET NO.	TOTAL SHEETS
11-19-21		6	ARK.	110800	35	49
12-17-21		CONDUIT DIAGRAM				

STATE OF ARKANSAS
REGISTERED PROFESSIONAL ENGINEER
No. 10479
BRENT L. MASSEY
12/17/2021

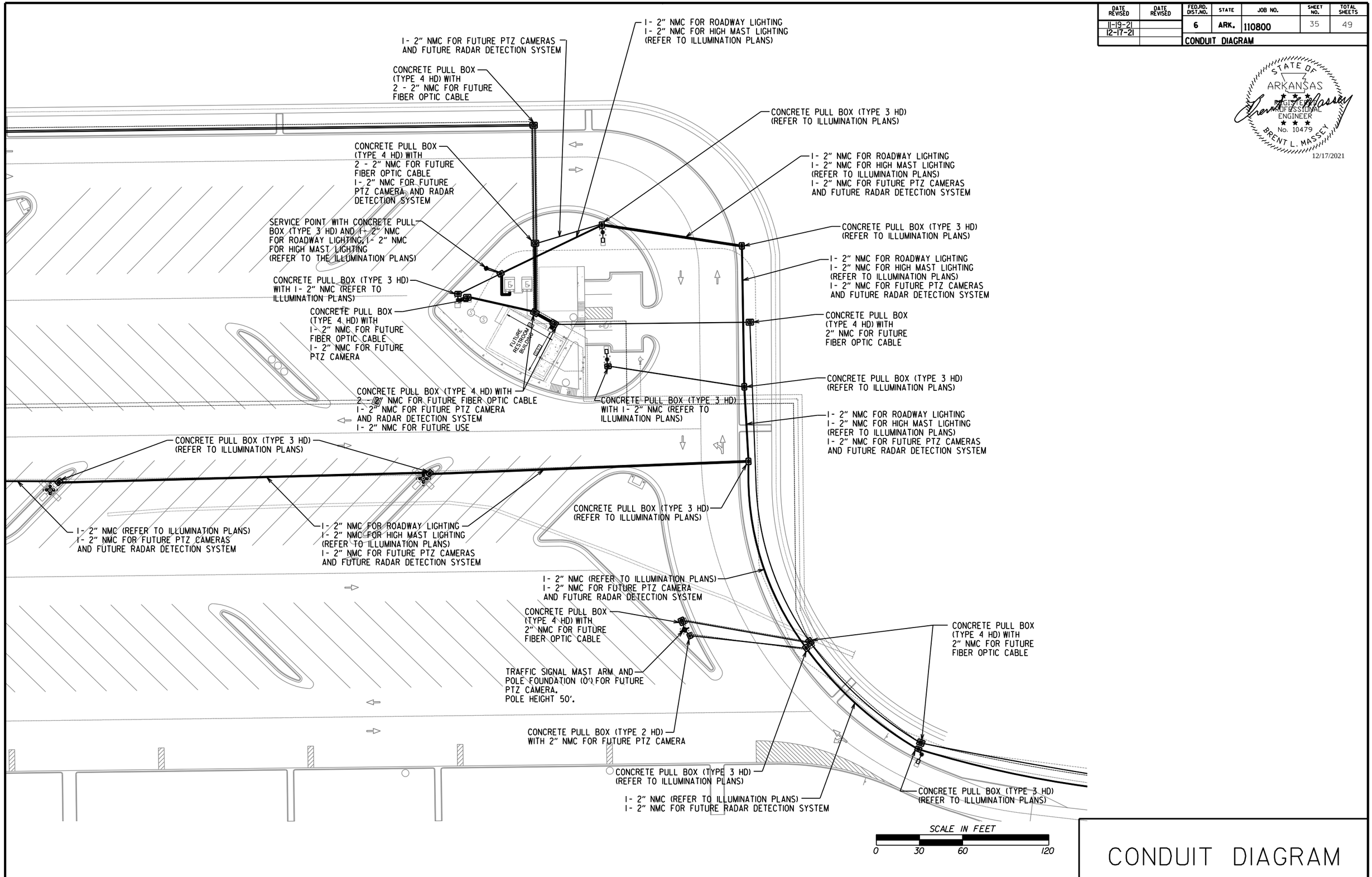

CONDUIT DIAGRAM

T110800_COMMENTS.DGN 12/17/2021

DATE REVISED	DATE REVISED	FED.RD. DIST.NO.	STATE	JOB NO.	SHEET NO.	TOTAL SHEETS
11-19-21		6	ARK.	110800	36	49
12-17-21		CONDUIT DIAGRAM				

STATE OF ARKANSAS
REGISTERED PROFESSIONAL ENGINEER
No. 10479
BRENT L. MASSEY
12/17/2021

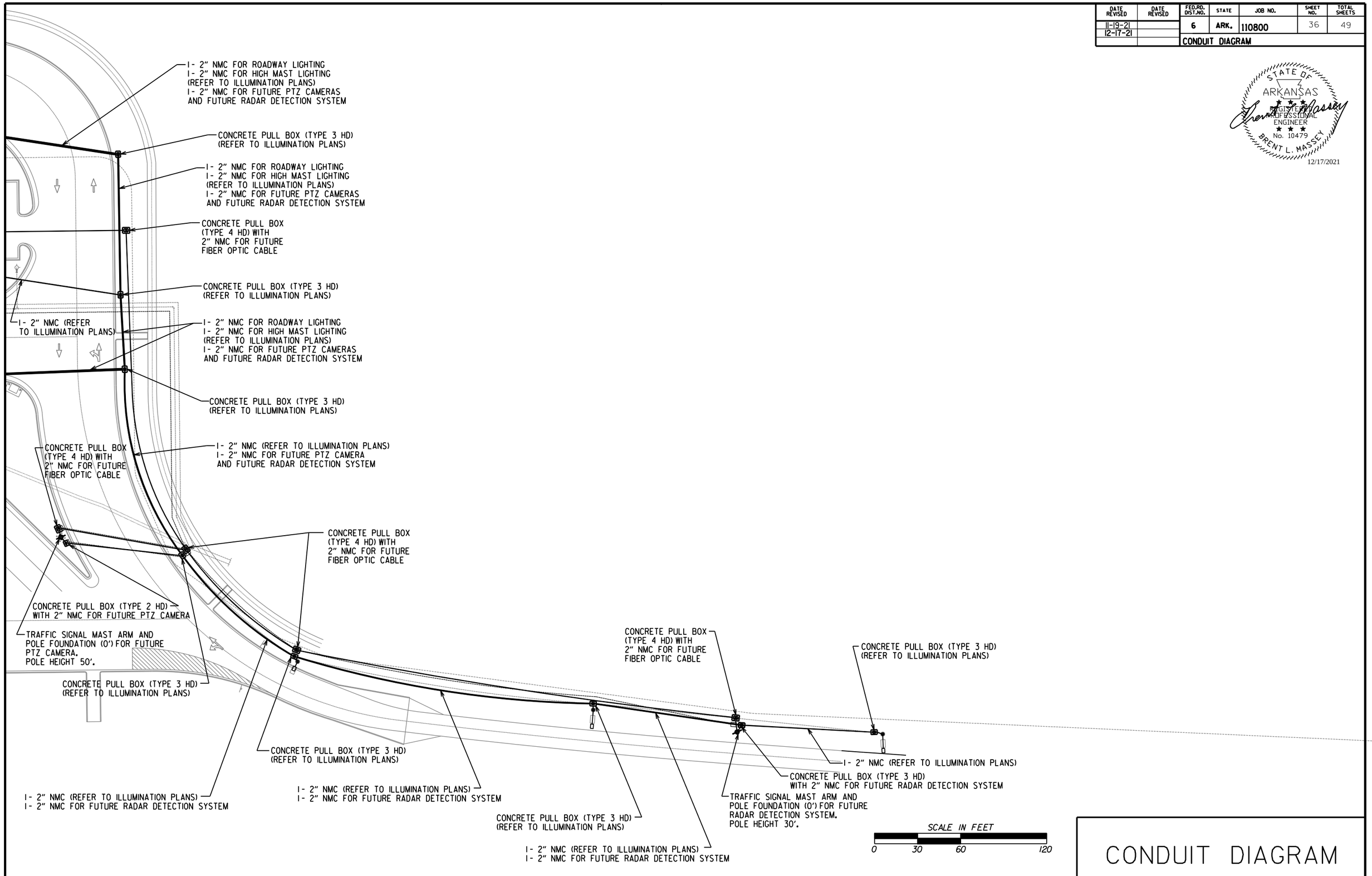

CONDUIT DIAGRAM

T110800_CONDUIT.DGN 12/17/2021

DATE REVISED	DATE FILMED	DATE REVISED	DATE FILMED	FED.RD. DIST.NO.	STATE	FED. AID PROJ. NO.	SHEET NO.	TOTAL SHEETS
09-16-21				6	ARK.			
11-19-21				JOB NO.		110800	37	49
12-17-21								

(2) SIGN PLACEMENT PLAN

N

0 2000 3000 4000

SCALE IN FEET

STATE OF ARKANSAS REGISTERED PROFESSIONAL ENGINEER No. 10479 BRENT L. MASSEY 12/17/2021

31944 - MOT.dgn 12/15/2021

DATE REVISED	DATE FILMED	DATE REVISED	DATE FILMED
05/06/2021		11/19/2021	
06/04/2021		12/17/2021	
09/16/2021			

FED.RD. DIST.NO.	STATE	FED.AID PROJ.NO.	SHEET NO.	TOTAL SHEETS
6	ARK.			
JOB NO.		110800	38	49

2 ILLUMINATION NOTES AND QUANTITIES

STATE OF ARKANSAS LICENSED PROFESSIONAL ENGINEER No. 7527 JOSEPH A. SARTINE

Dec 17 2021 9:34 AM

GENERAL NOTES:

1. ALL ELECTRICAL WORK SHALL BE PERFORMED IN ACCORDANCE WITH NATIONAL ELECTRICAL CODE (NFPA 70, CURRENT EDITION), LIFE SAFETY CODE (NFPA 101, CURRENT EDITION), UNDERGROUND FACILITIES DAMAGE PREVENTION ACT (§14-271-101 ET SEQ.), AND LOCAL ELECTRICAL CODE. IN ADDITION, ALL PARTS OF THIS INSTALLATION SHALL BE IN ACCORDANCE WITH THE ARKANSAS DEPARTMENT OF TRANSPORTATION STANDARD SPECIFICATIONS FOR HIGHWAY CONSTRUCTION, CURRENT EDITION.

2. PRIOR TO CONSTRUCTION, THE CONTRACTOR SHALL PROVIDE DOCUMENTATION TO PROJECT ENGINEER, TO ENSURE ARKANSAS STATE CODES (§17-28-101 ET SEQ. AND §20-31-101 ET SEQ.) ARE MET. THE DOCUMENTATION SHALL INCLUDE:
   (1) ELECTRICIANS' LICENSE INFORMATION AND EXPIRATION DATE.
   (2) THE RATIO OF LICENSED-ELECTRICIAN-TO-APPRENTICE-ELECTRICIANS.
   (3) PRINTED SEARCH RESULT OF LICENSED ELECTRICIANS FROM ARKANSAS DEPARTMENT OF LABOR ELECTRICIAN LICENSEE DIRECTORY (https://www.ark.org/labor/electrician/search.php)
   ALL LICENSES SHALL BE VALID AND CURRENT.

3. THE CONTRACTOR SHALL NOT ENGAGE IN EXCAVATION OR DEMOLITION ACTIVITIES WITHOUT HAVING FIRST NOTIFIED THE ARKANSAS ONE CALL CENTER IN ACCORDANCE WITH UNDERGROUND FACILITIES DAMAGE PREVENTION ACT. NOT ALL UTILITY COMPANIES ARE MEMBERS OF THE ARKANSAS ONE CALL SYSTEM. THE CONTRACTOR IS ADVISED TO CONTACT ALL NON-MEMBER UTILITIES AS WELL AS THE ONE CALL CENTER.

4. UNDERGROUND UTILITIES EXIST WITHIN AND ADJACENT TO THE LIMITS OF CONSTRUCTION. SOME UTILITES MAY HAVE BEEN RELOCATED SINCE THE TIME OF DESIGN AND THE CONTRACTOR'S NOTICE TO PROCEED. THE CONTRACTOR SHALL CONTACT THE UTILITY COMPANIES INVOLVED AND VERIFY THE LOCATIONS OF UNDERGROUND UTILITIES. THE CONTRACTOR SHALL MAINTAIN THE UTILITY LOCATION MARKINGS UNTIL IT IS NO LONGER NECESSARY.

5. THE CONTRACTOR SHALL BE RESPONSIBLE FOR ALL COSTS OF REPAIR OR REPLACEMENT OF EXISTING UTILITES DAMAGED DURING THE CONSTRUCTION.

6. ANY EQUIPMENT OR APPURTENANCE THAT INTERFERES WITH THE PROPOSED CONSTRUCTION AND WHICH MAYBE THE PROPERTY OF UTILITY SERVICE ORGANIZATIONS SHALL BE MOVED BY THE OWNERS UNLESS OTHERWISE PROVIDED.

7. CONDUIT INSTALLED UNDER ROADWAY SURFACES SHALL BE INSTALLED BY A PUSHING OR BORING METHOD OR AS DIRECTED BY ENGINEER. PVC OR HDPE CONDUIT SHALL BE USED. PVC CONDUIT SHALL BE MARKED "DIR. BORING" OR "DIRECTIONAL BORING" AS PER NEC.

8. NON-DESTRUCTIVE MEG TEST AND CURRENT LEAKAGE TEST SHALL BE PERFORMED ON NEW CONDUCTORS, IN THE PRESENCE OF FIELD INSPECTOR. THE TEST VOLTAGE SHALL BE LIMITED TO 600 VOLTS. ANY CONDUCTOR NOT MEETING THE MIMINUM ACCEPTABLE VALUE SHALL BE REPLACED AT THE CONTRACTOR'S EXPENSE USING NEW CONDUCTOR. THE RESULTS SHALL BE DOCUMENTED AND PROVIDED TO THE JOB ENGINEER. THE CONTRACTOR SHALL BE RESPONSIBLE FOR ALL DAMAGES CAUSED BY MEG TEST WHILE DEVICES OR ACCESSORIES ARE STILL CONNECTED AND SHALL BE REPLACED AT CONTRACTOR'S EXPENSE. SEE SPECIAL PROVISION ELECTRICAL CONDUCTORS-IN-CONDUIT.

9. PULL BOX LIDS SHALL CLOSE FLUSH WITHOUT PINCHING ANY CONDUCTORS. CONDUIT LENGTHS IN PULL BOXES SHALL BE SET ACCORDINGLY. ANY CONDUCTORS THAT HAVE BEEN DAMAGED BY PINCHING SHALL BE COMPLETELY REPLACED AT CONTRACTOR'S EXPENSE.

10. EACH ROADWAY ILLUMINATION POLE SHALL BE BONDED TO EQUIPMENT GROUNDING CONDUCTOR PER NEC. SEE ARTICLES 250 AND 410.

11. ALL ELECTRICAL COMPONENTS SHALL BE UL LISTED.

12. ALL LUMINAIRE ASSEMBLIES SHALL HAVE BUG RATING OF U0.

13. PULL CABLE SHALL BE MINIMUM 1/4" PULL NYLON OR POLYESTER ROPE, OR 1200 LBS PULL TAPE WHEN PULLING CONDUCTORS. STEEL CABLE OR FISH TAPE SHALL NOT BE USED. CONNECT PULLING DEVICES TO COPPER WIRE AND NOT TO JACKET. USE PULLING COMPOUND PER MANUFACTURER'S REQUIREMENTS. ALL BENDS SHALL NOT BE LESS THAN RECOMMENDED BY NEC FOR CONDUCTORS USED.

14. ALL CONCRETE PULL BOXES SHALL BE TYPE 2 HD UNLESS OTHERWISE INDICATED ON THE PLANS.
    ALL CONDUIT SHALL BE 2" UNLESS OTHERWISE INDICATED ON THE PLANS.

15. SLACK CABLES IN PULL BOXES SHALL BE 3 FEET.

SUMMARY OF ILLUMINATION QUANTITIES

ITEM NUMBER	ITEM	QUANTITY	UNIT
SP	ELECTRICAL CONDUCTORS-IN-CONDUIT (2C/8 A.W.G., E.G.C.)	1509	LIN. FT.
SP	ELECTRICAL CONDUCTORS-IN-CONDUIT (2C/6 A.W.G.)	2048	LIN. FT.
SP	ELECTRICAL CONDUCTORS-IN-CONDUIT (2C/4 A.W.G., E.G.C.)	2583	LIN. FT.
SP	ELECTRICAL CONDUCTORS-IN-CONDUIT (1C/6 A.W.G.)	2048	LIN. FT.
SP	ELECTRICAL CONDUCTORS FOR LUMINAIRES	2338	LIN. FT.
710	NON-METALLIC CONDUIT (2")	3921	LIN. FT.
711	CONCRETE PULL BOX (TYPE 3 HD)	18	EACH
SP	HIGH MAST ILLUMINATION ASSEMBLY (100'-4 LUMINAIRE)	2	EACH
SP	PEDESTAL TYPE SERVICE POINT (100 AMP)	1	EACH
SP	LED ROADWAY ILLUMINATION POLE (15,000 LUMENS, COBRA HEAD, T-BASE, 40')	5	EACH
SP	LED ROADWAY ILLUMINATION POLE (15,000 LUMENS, COBRA HEAD, SHOE BASE 40')	2	EACH
SP	LED ROADWAY ILLUMINATION POLE (15,000 LUMENS, COBRA HEAD, SHOE BASE 50')	2	EACH

DATE	REVISION	SHEET NUMBER
5/6/2021	ADDENDUM	31, 32
6/4/2021	LIGHTING SERVICE POINT RELOCATION	31, 32, 33, 35
9/16/2021	DESIGN CHANGE	31, 32, 33, 35, 41
10/21/2021	PULL BOX CHANGE	31, 32, 33, 35, 41
11/19/2021	SHEET NUMBER CHANGE AND LAYOUT DESCRIPTION CHANGE	31 — 42
12/17/2021	SHEET NUMBER CHANGE	31 — 42

LOCATION: I-40 WESTBOUND TRUCK PARKING
CITY: WEST MEMPHIS
COUNTY: CRITTENDEN
DISTRICT: 01 SCALE: N/A DRAWN BY: PC

DATE REVISED	DATE FILMED	DATE REVISED	DATE FILMED
05/06/2021		11/19/2021	
06/04/2021		12/17/2021	
09/16/2021			

FED.RD. DIST.NO.	STATE	FED.AID PROJ.NO.	SHEET NO.	TOTAL SHEETS
6	ARK.			
JOB NO.		110800	39	49

(2) ILLUMINATION TABLES

STATE OF ARKANSAS LICENSED PROFESSIONAL ENGINEER No. 7527 JOSEPH A. SARTINI
Dec 17 2021 8:44 AM DocuSign

LUMINAIRE SCHEDULE

POLE NO.	NORTHING	EASTING	STA.	OFFSET (FT)	CENTER LINE	POLE HT. (FT)	POLE ARM (FT)	POLE BASE	ORIENTATION ANGLE (PLAN NORTH = 0°, CLOCKWISE ROTATION)
SERVICE POINT	304509.44	1838198.71	8+01.86	406.66	I-40	N/A	N/A	N/A	N/A
POLE 01	304386.90	1838910.19	*	*		40	10	BREAKAWAY	345°
POLE 02	304330.95	1838715.47	*	*		40	10	BREAKAWAY	310°
POLE 03	304289.17	1838510.77	10+10.34	86.60		40	10	BREAKAWAY	270°
POLE 04	303964.83	1837710.11	1+45.63	76.97		40	10	BREAKAWAY	270°
POLE 05	303785.81	1837430.83	*	*		40	10	BREAKAWAY	40°
POLE 06	304480.66	1838300.05	8+85.38	342.45		40	4	NON-BREAKAWAY	340°
POLE 07	304562.21	1838265.82	8+83.73	430.87		40	4	NON-BREAKAWAY	160°
POLE 08**	304481.92	1838188.64	7+82.33	384.81		50	4	NON-BREAKAWAY	50°
POLE 09**	304401.35	1837841.92	4+25.59	436.90		50	4	NON-BREAKAWAY	130°
HIGHMAST 01	304357.73	1838210.19	7+56.43	261.45		100	N/A	N/A	270°
HIGHMAST 02	304258.21	1837970.10	4+93.73	257.24		100	N/A	N/A	270°

NOTES:
* INDICATES STA. AND OFFSET NOT AVAILABLE IN SURVEY
** LUMINAIRE MOUNTING HEIGHT FOR POLES 08 AND 09 IS 40 FT
SERVICE POINT SHALL BE MINIMUM 6FT AWAY FROM THE TRANSFORMER.
LOCATION OF SERVICE POINT MAY BE FIELD ADJUSTED WITH RESPECT TO FORCE MAIN.

ILLUMINATION STATISTICS

DESCRIPTION	AVERAGE (FC)	MAXIMUM (FC)	MINIMUM (FC)	AVG/MIN
PARKING LOT	1.1	2.5	0.3	3.7:1
ROADWAY	0.7	1.6	0.2	3.5:1

NOTE:
1. CALCULATIONS WERE BASED ON 0.87 LIGHT LOSS FACTOR.
2. HORIZONTAL ILLUMINATION VALUES ARE SHOWN.

ILLUMINATION DESIGN CRITERIA

DESCRIPTION	AVG. (FC)	AVG/MIN
PARKING LOT	1.0	4:1
RAMPS	0.6	4:1

NOTE:
1. DESIGN BASIS WERE AASHTO ROADWAY LIGHTING DESIGN GUIDE, 7TH ED. AND IES RP-8-18

VOLTAGE DROP, CIRCUIT A, ON-RAMP

SEGMENT		VOLTAGE	PHASE	SETS	CONDUCTOR	CURRENT	SEG AMP	Z/1000ft	LENGTH	VD	% VD
SRV. PT.	POLE 03	240	1	1	#8	0.94	2.82	0.78	579	2.55	1.06
POLE 03	POLE 02	240	1	1	#8	0.94	1.88	0.78	212	0.62	0.26
POLE 02	POLE 01	240	1	1	#8	0.94	0.94	0.78	200	0.29	0.12
										TOTAL	1.44

VOLTAGE DROP, CIRCUIT B, BUILDINGS

SEGMENT		VOLTAGE	PHASE	SETS	CONDUCTOR	CURRENT	SEG AMP	Z/1000ft	LENGTH	VD	% VD
SRV. PT.	POLE 08	240	1	1	#8	0.94	2.82	0.78	34	0.15	0.06
POLE 08	POLE 07	240	1	1	#8	0.94	1.88	0.78	111	0.33	0.14
POLE 07	POLE 06	240	1	1	#8	0.94	0.94	0.78	256	0.38	0.16
										TOTAL	0.35

VOLTAGE DROP, CIRCUIT C, EXIT RAMP

SEGMENT		VOLTAGE	PHASE	SETS	CONDUCTOR	CURRENT	SEG AMP	Z/1000ft	LENGTH	VD	% VD
SRV. PT.	PULL BOX	240	1	1	#6	0.94	2.82	0.49	1077	2.98	1.24
PULL BOX	POLE 09	240	1	1	#6	0.94	0.94	0.49	298	0.27	0.11
PULL BOX	POLE 04	240	1	1	#6	0.94	1.88	0.49	220	0.41	0.17
POLE 04	POLE 05	240	1	1	#6	0.94	0.94	0.49	328	0.30	0.13
										TOTAL	1.65

VOLTAGE DROP, CIRCUIT D, HIGH-MAST

SEGMENT		VOLTAGE	PHASE	SETS	CONDUCTOR	CURRENT	SEG AMP	Z/1000ft	LENGTH	VD	% VD
Srv. Pt	HM 01	240	1	1	#4	10.21	20.42	0.31	553	7.00	2.92
HM 01	HM 02	240	1	1	#4	10.21	10.21	0.31	258	1.63	0.68
										TOTAL	3.60

ELECTRICAL SERVICE DATA

CIRCUIT ID	LOCATION	SERVICE VOLTAGE	SERVICE CONDUIT SIZE	SERVICE CONDCUTORS	MAIN CIRCUIT BREAKER	BRANCH CIRCUIT BREAKER	BRANCH CIRCUIT (AMPS)	KVA LOAD
A	SEE LUMINAIRE SCHEDULE TABLE AND ILLUMINATION LAYOUT	120/240V, SINGLE PHASE	2" NMC	2C/8 A.W.G. & E.G.C.	2P/100A	2P/15A	2.82	0.68
B			2" NMC	2C/8 A.W.G. & E.G.C.		2P/15A	2.82	0.68
C			2" NMC	2C/6 A.W.G. & E.G.C.		2P/15A	2.82	0.68
D			2" NMC	2C/4 A.W.G. & E.G.C.		20P/50A	20.42	4.90

LOCATION: I-40 WESTBOUND TRUCK PARKING
CITY: WEST MEMPHIS
COUNTY: CRITTENDEN
DISTRICT: 01 SCALE: N/A DRAWN BY: PC

5/6/2021
MI10800_LIGHTING.DGN

DATE REVISED	DATE FILMED	DATE REVISED	DATE FILMED
06/04/2021		12/17/2021	
09/16/2021			
11/19/2021			

FED.RD. DIST.NO.	STATE	FED.AID PROJ.NO.	SHEET NO.	TOTAL SHEETS
6	ARK.			
JOB NO.		110800	40	49

(2) ILLUMINATION LAYOUT - 100 SCALE

STATE OF ARKANSAS LICENSED PROFESSIONAL ENGINEER No. 7527 JOSEPH A. SARTINI Dec 17, 2021 DocuSign

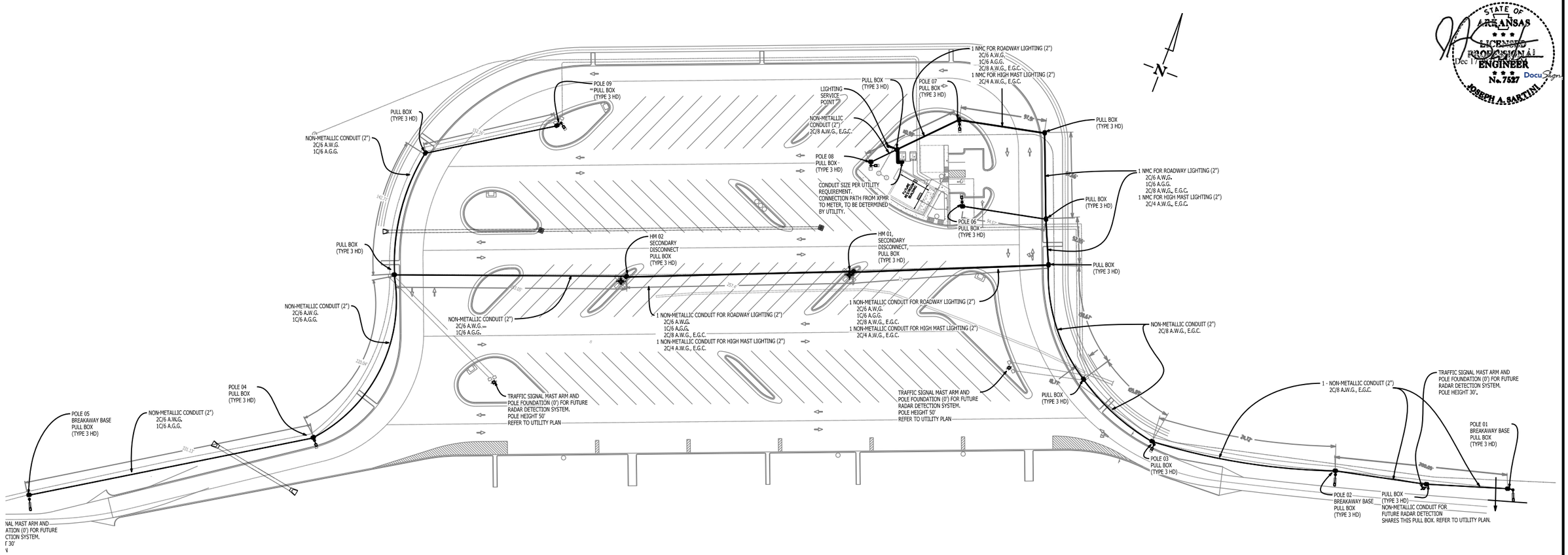

LIGHTING NOTES:

1. CONDUIT RUNS AND PULL BOXES NOT LABELED DEALS WITH OPTICAL FIBER AND FUTURE EQUIPMENT. REFER TO UTILITY PLANS.
2. FOR LUMINAIRE ORIENTATION AND X-Y COORDINATES OF POLES, SEE LUMINAIRE SCHEDULE.
3. A PULL BOX SHALL BE INSTALLED WITHIN 5' OF POLE FOUNDATION.
4. CONDUIT BURIED UNDERGROUND SHALL HAVE MINIMUM 24" DEPTH. CONDUIT INSTALLED USING DIRECTIONAL BORING SHALL BE HDPE SCH. 40, SCH. 80, OR SDR 13.5.
5. INSTALL CONDUIT BELL END FITTINGS ON NON-METALLIC CONDUIT ENDS. THE COST OF FITTINGS SHALL BE CONSIDERED SUBSIDIARY TO THE PAY ITEM, "NON-METALLIC CONDUIT (2").
6. THE DEGREE OF TILT ON LUMINAIRES SHALL BE ZERO.
7. ALL SPLICES SHALL BE WATERTIGHT AND UL-LISTED FOR CONTINUOUS USE IN SUBMERSIBLE INSTALLATIONS.
8. USE MINIMUM 1/4" PULL ROPE OR 1200 LBS. PULL TAPE WHEN PULLING CONDUCTORS.
9. E.G.C. SHALL BE EXOTHERMICALLY BONDED TO GROUND ROD.
10. CONDUCT A MINIMUM 14-DAY BURN TEST FOR THE COMPLETE LIGHTING SYSTEM. REPLACE BURNED OUT AND NOTICEABLY DIM LUMINAIRES; MALFUNCTIONING EQUIPMENT SHALL BE CORRECTED, AND RETEST THE SYSTEM. OTHERWISE REMOVE AND REPLACE WITH NEW EQUIPMENT.
11. SEE STANDARD DRAWING SD-6 FOR PULL BOX CONSTRUCTION.
12. ALL METAL POLES SHALL BE GROUNDED TO E.G.C. PER NEC (2020) ARTICLE 410.
13. LOCATION OF SERVICE POINT MAY BE ADJUSTED WITH RESPECT TO FORCE MAIN.
14. POLES 01 THROUGH 05 UTILIZE TYPE III DISTRIBUTION. POLES 06 THROUGH 09 UTILIZE TYPE V DISTRIBUTION.
15. ALL CONDUIT ENDS IN PULL BOXES AND ALL CONDUIT EXPOSED TO WEATHER SHALL BE SEALED, AND CAPPED, FOR A FUTURE PHASE OF THE CONSTRUCTION.
16. ALL NON-METALLIC CONDUIT ENDS, OR TERMINATING ENDS, SHALL HAVE BELL END FITTING INSTALLED. THIS INCLUDES PULL BOXES, POLE BASES, CABINETS, AND JUNCTION BOXES.

LOCATION: I-40 WESTBOUND TRUCK PARKING
CITY: WEST MEMPHIS
COUNTY: CRITTENDEN
DISTRICT: 01 SCALE: 1"=100' DRAWN BY: PC

3/11/2021

M110800_LIGHTING.DGN

DATE REVISED	DATE FILMED	DATE REVISED	DATE FILMED
06/04/2021		12/17/2021	
09/16/2021			
11/19/2021			

FED.RD. DIST.NO.	STATE	FED.AID PROJ.NO.	SHEET NO.	TOTAL SHEETS
6	ARK.			
JOB NO.		110800	41	49

2 ILLUMINATION LAYOUT - 60 SCALE

STATE OF ARKANSAS LICENSED PROFESSIONAL ENGINEER No. 7527 JOSEPH A. SARTINI

Dec 17 2021 DocuSign

NOTES:

1. DISTANCE SHOWN IS MEASURED BETWEEN THE CENTER OF PULL BOXES.
2. 2C/8 A.W.G., E.G.C. INDICATES TWO #8 CONDUCTORS AND ONE #8 E.G.C.
3. 2C/6 A.W.G. INDICATES TWO #6 CONDUCTORS.
   1C/6 A.W.G. IS SERVED AS E.G.C.
4. 2C/4 A.W.G., E.G.C. INDICATES TWO #4 CONDUCTORS AND ONE #4 E.G.C.
5. OPTICAL FIBER CABLE AND PTZ CAMERA ARE CO-LOCATED AT POLES 08 AND 09.
6. ALL SPLICES SHALL BE WATERTIGHT AND UL-LISTED FOR CONTINUOUS USE IN SUBMERSIBLE INSTALLATIONS.
7. USE MINIMUM 1/4" PULL ROPE OR 1200 LBS. PULL TAPE WHEN PULLING
8. E.G.C. SHALL BE EXOTHERMICALLY BONDED TO GROUND ROD.
9. CONDUCT A MINIMUM 14-DAY BURN TEST FOR THE COMPLETE LIGHTING SYSTEM. REPLACE BURNED OUT AND NOTICEABLY DIM LUMINAIRES; MALFUNCTIONING EQUIPMENT SHALL BE CORRECTED, AND RETEST THE SYSTEM. OTHERWISE REMOVE AND REPLACE WITH NEW EQUIPMENT.
10. SEE STANDARD DRAWING SD-6 FOR PULL BOX CONSTRUCTION.
11. SEE UTILITY PLANS FOR ADDITIONAL INFORMATION.
12. ALL CONDUIT ENDS IN PULL BOXES AND ALL CONDUIT EXPOSED TO WEATHER SHALL BE SEALED, AND CAPPED, FOR A FUTURE PHASE OF THE CONSTRUCTION.
13. **ALL NON-METALLIC CONDUIT ENDS, OR TERMINATING ENDS, SHALL HAVE BELL END FITTING INSTALLED. THIS INCLUDES PULL BOXES, POLE BASES, CABINETS, AND JUNCTION BOXES.**

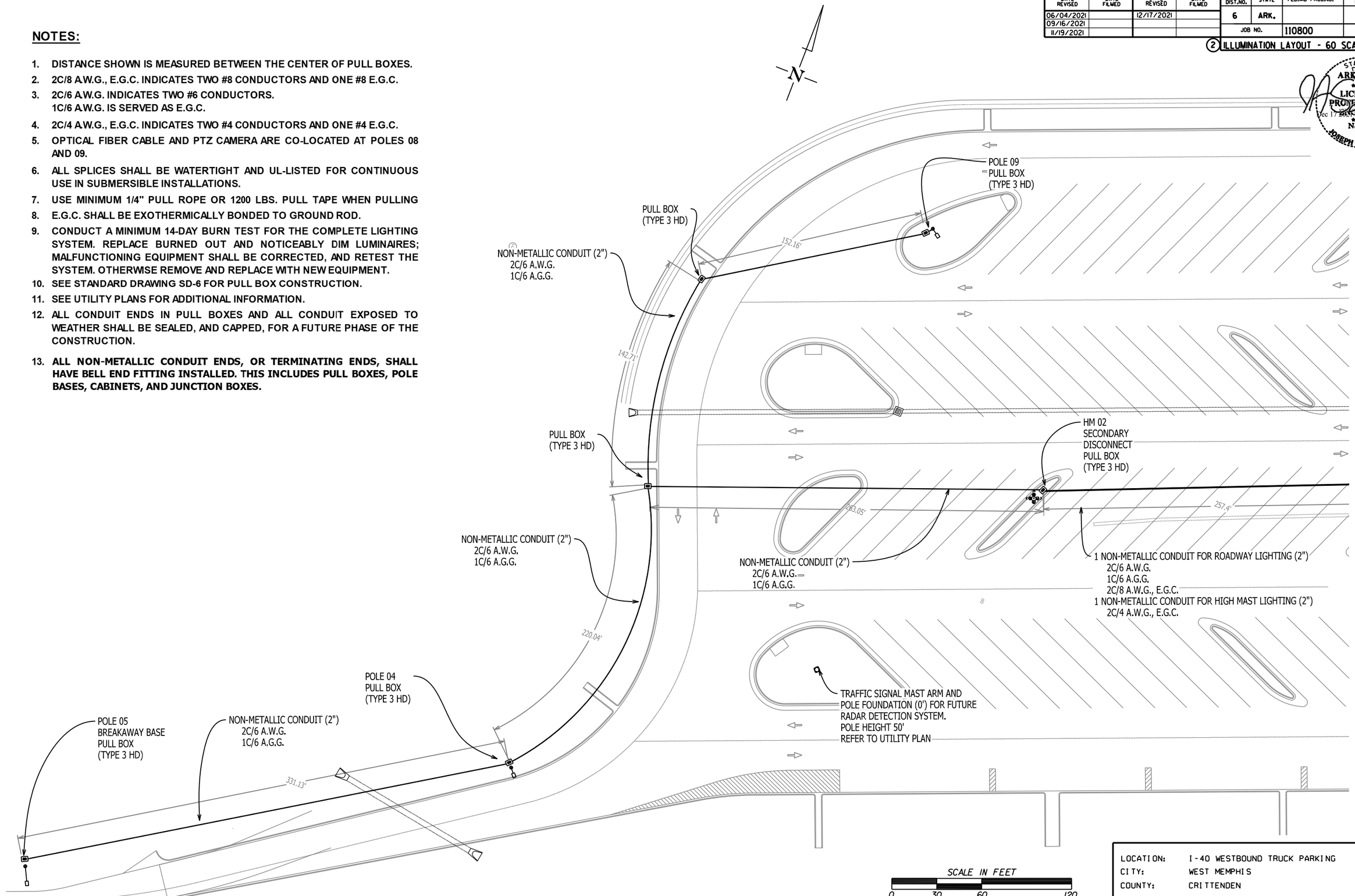

LOCATION: I-40 WESTBOUND TRUCK PARKING
CITY: WEST MEMPHIS
COUNTY: CRITTENDEN
DISTRICT: 01 SCALE: 1"=60' DRAWN BY: PC

3/5/2021

M110800_LIGHTING.DGN

DATE REVISED	DATE FILMED	DATE REVISED	DATE FILMED	FED.RD. DIST.NO.	STATE	FED.AID PROJ.NO.	SHEET NO.	TOTAL SHEETS
05/28/2021		11/19/2021		6	ARK.			
06/04/2021		12/17/2021		JOB NO.		110800	42	49
09/16/2021								

(2) ILLUMINATION LAYOUT - 60 SCALE

STATE OF ARKANSAS LICENSED PROFESSIONAL ENGINEER No. 7527 JOSEPH A. SARTINI

Dec 17, 2021

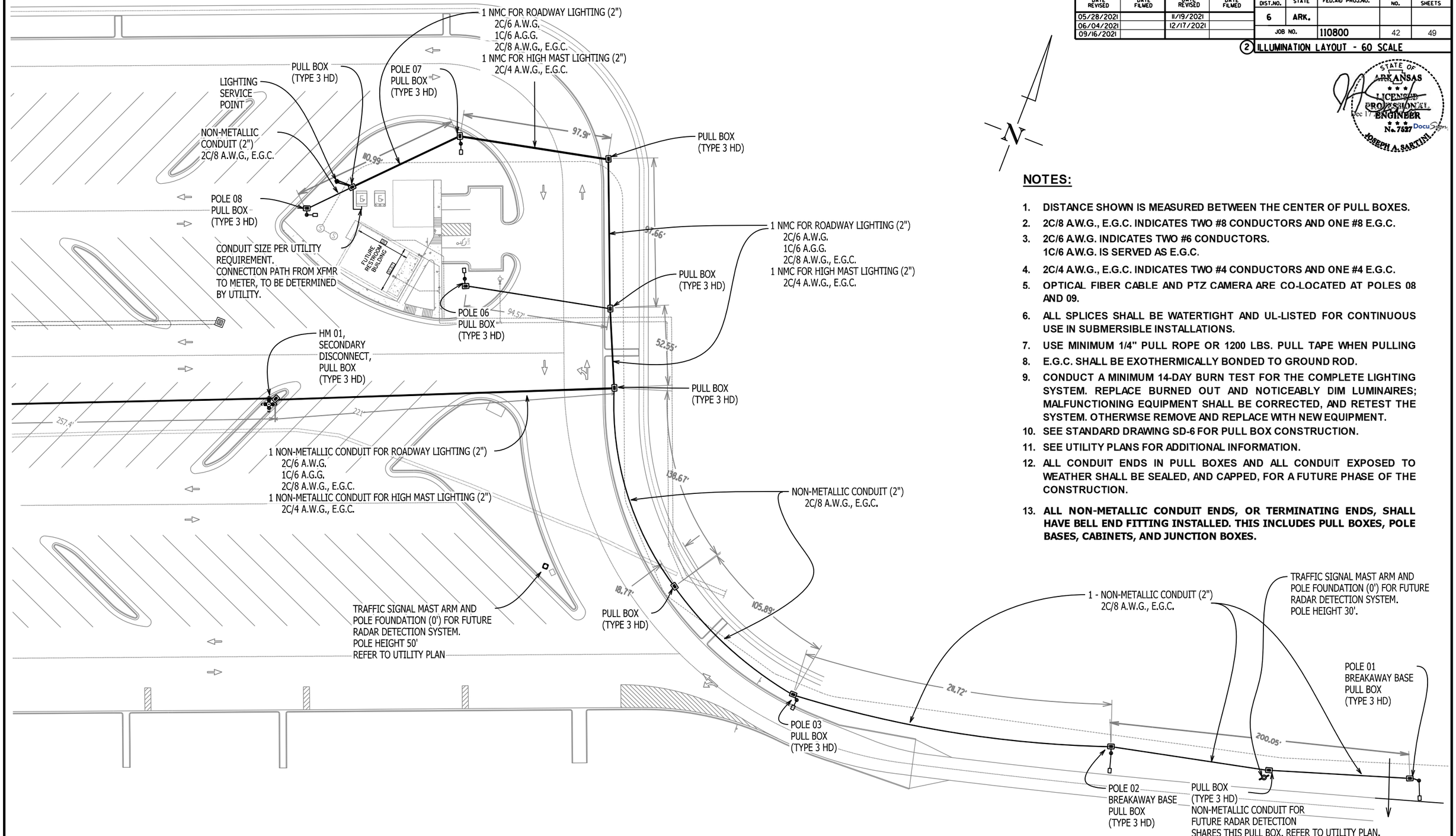

NOTES:

1. DISTANCE SHOWN IS MEASURED BETWEEN THE CENTER OF PULL BOXES.
2. 2C/8 A.W.G., E.G.C. INDICATES TWO #8 CONDUCTORS AND ONE #8 E.G.C.
3. 2C/6 A.W.G. INDICATES TWO #6 CONDUCTORS. 1C/6 A.W.G. IS SERVED AS E.G.C.
4. 2C/4 A.W.G., E.G.C. INDICATES TWO #4 CONDUCTORS AND ONE #4 E.G.C.
5. OPTICAL FIBER CABLE AND PTZ CAMERA ARE CO-LOCATED AT POLES 08 AND 09.
6. ALL SPLICES SHALL BE WATERTIGHT AND UL-LISTED FOR CONTINUOUS USE IN SUBMERSIBLE INSTALLATIONS.
7. USE MINIMUM 1/4" PULL ROPE OR 1200 LBS. PULL TAPE WHEN PULLING
8. E.G.C. SHALL BE EXOTHERMICALLY BONDED TO GROUND ROD.
9. CONDUCT A MINIMUM 14-DAY BURN TEST FOR THE COMPLETE LIGHTING SYSTEM. REPLACE BURNED OUT AND NOTICEABLY DIM LUMINAIRES; MALFUNCTIONING EQUIPMENT SHALL BE CORRECTED, AND RETEST THE SYSTEM. OTHERWISE REMOVE AND REPLACE WITH NEW EQUIPMENT.
10. SEE STANDARD DRAWING SD-6 FOR PULL BOX CONSTRUCTION.
11. SEE UTILITY PLANS FOR ADDITIONAL INFORMATION.
12. ALL CONDUIT ENDS IN PULL BOXES AND ALL CONDUIT EXPOSED TO WEATHER SHALL BE SEALED, AND CAPPED, FOR A FUTURE PHASE OF THE CONSTRUCTION.
13. ALL NON-METALLIC CONDUIT ENDS, OR TERMINATING ENDS, SHALL HAVE BELL END FITTING INSTALLED. THIS INCLUDES PULL BOXES, POLE BASES, CABINETS, AND JUNCTION BOXES.

LOCATION: I-40 WESTBOUND TRUCK PARKING
CITY: WEST MEMPHIS
COUNTY: CRITTENDEN
DISTRICT: 01 SCALE: 1"=60' DRAWN BY: PC

M110800_LIGHTING.DGN 3/11/2021

DATE REVISED	DATE FILMED	DATE REVISED	DATE FILMED	FED.RD. DIST.NO.	STATE	FED.AID PROJ.NO.	SHEET NO.	TOTAL SHEETS
06/04/2021		12/17/2021		6	ARK.			
09/16/2021				JOB NO.		110800	43	49
11/19/2021								

(2) ILLUMINATION DETAILS

STATE OF ARKANSAS LICENSED PROFESSIONAL ENGINEER No. 7527 JOSEPH A. SARTINI Dec 17 2021 9:40 AM DocuSign

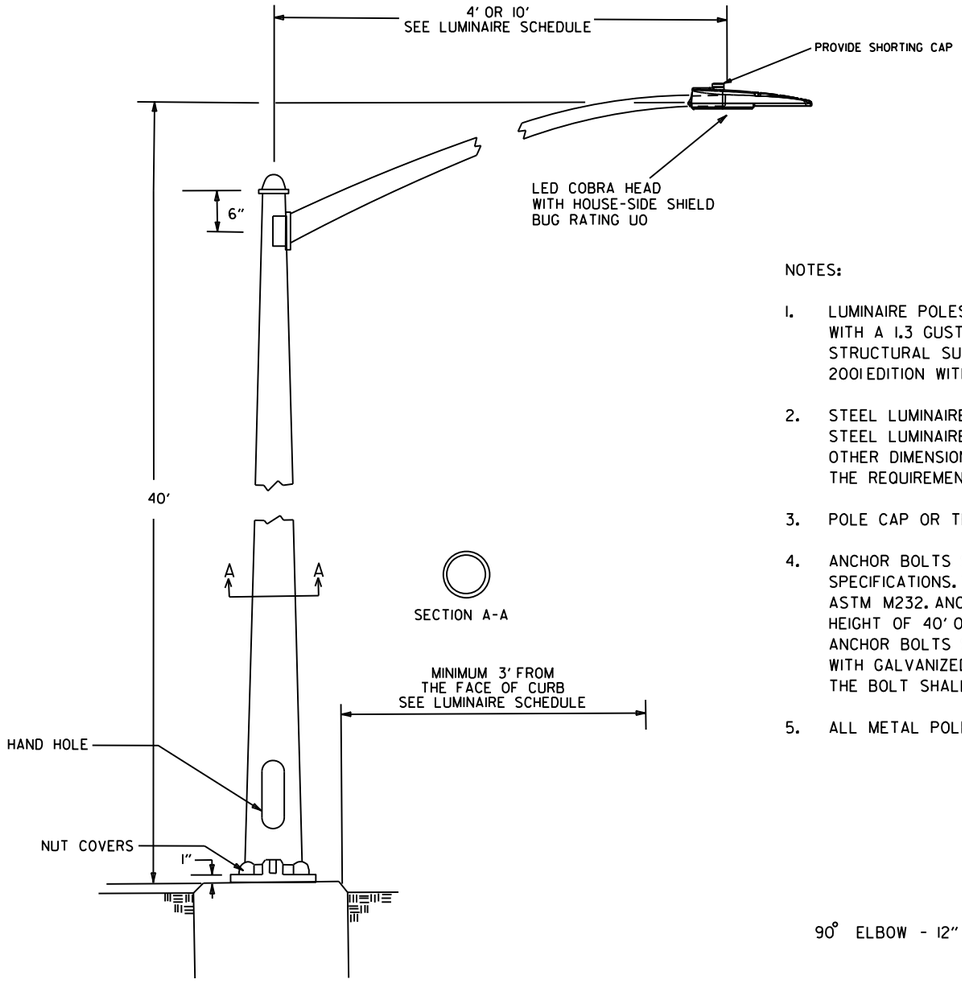

COBRA HEAD LUMINAIRE WITH SHOE BASE

NOTES:

1. LUMINAIRE POLES SHALL MEET THE REQUIREMENTS OF 90 MPH WIND ZONE WITH A 1.3 GUST FACTOR ON THE AASHTO STANDARD SPECIFICATIONS FOR STRUCTURAL SUPPORTS FOR HIGHWAY SIGNS LUMINAIRES AND TRAFFIC SIGNALS, 2001 EDITION WITH 2003 AND 2006 INTERIMS.

2. STEEL LUMINAIRE POLES SHALL BE A MINIMUM OF 11 GAUGE. STEEL LUMINAIRE POLES SHALL BE HOT-DIPPED GALVANIZED. OTHER DIMENSIONS PER MANUFACTURER'S RECOMMENDATION AS NECESSARY TO MEET THE REQUIREMENTS OF THE SP - LED ROADWAY ILLUMINATION POLE.

3. POLE CAP OR TENON CAP SHALL BE PROVIDED.

4. ANCHOR BOLTS SHALL MEET THE REQUIREMENTS OF SECTION 714 OF THE STANDARD SPECIFICATIONS. THE TOP 8" OF ALL ANCHOR BOLTS SHALL BE GALVANIZED PER ASTM M232. ANCHOR BOLTS IN FOUNDATIONS SHALL BE 1.25" X 30" FOR MOUNTING HEIGHT OF 40' OR GREATER, 1" X 30" FOR MOUNTING HEIGHT LESS THAN 40'. ANCHOR BOLTS SHALL HAVE TOP END THREADED NOT LESS THAN 5" AND FURNISHED WITH GALVANIZED HEX NUTS, LOCK WASHERS, AND TEMPLATE. THE LOWER END OF THE BOLT SHALL BE THREADED AND FURNISHED WITH HEX NUT AND TEMPLATE.

5. ALL METAL POLES SHALL BE BONDED TO E.G.C. PER NATIONAL ELECTRICAL CODE.

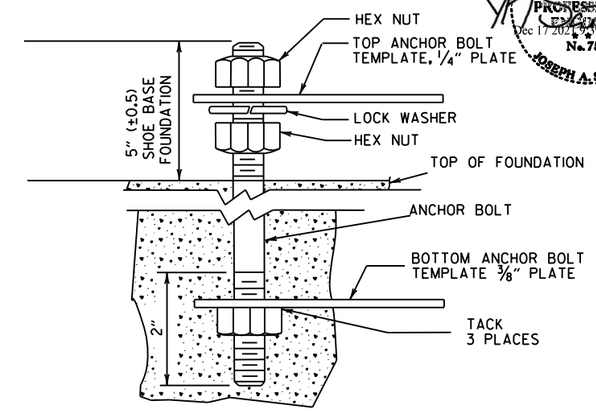

ANCHOR BOLT DETAIL

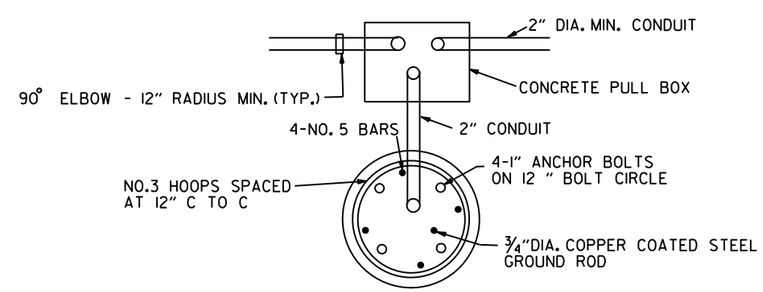

PLAN

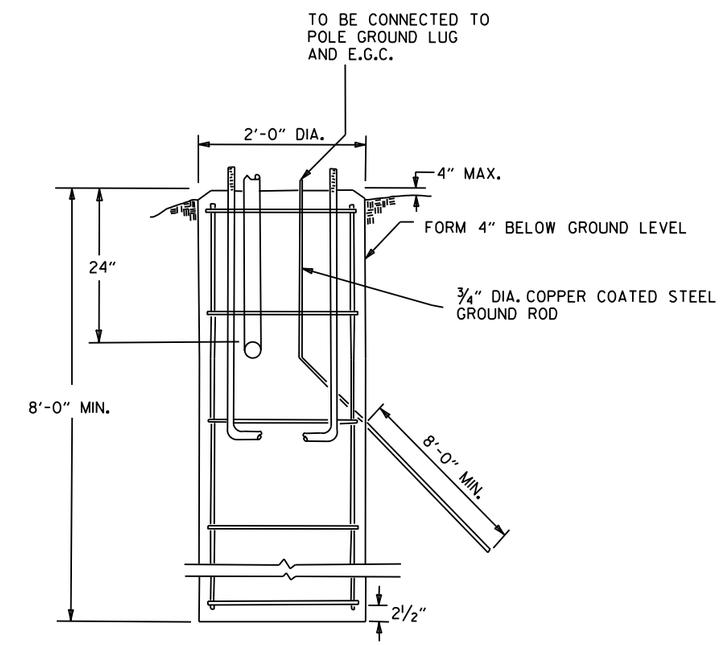

ROADWAY LUMINAIRE
POLE FOUNDATION

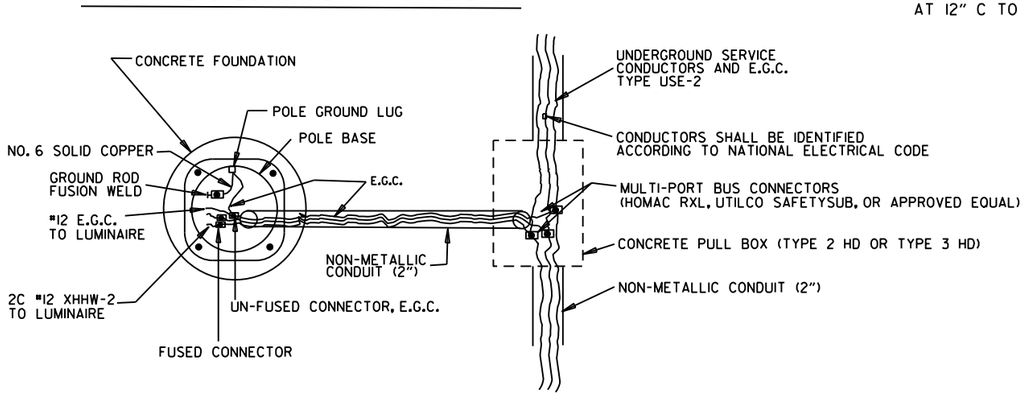

POLE FOUNDATION/PULL BOX
WIRING DETAIL

LOCATION:	I-40 WESTBOUND TRUCK PARKING		
CITY:	WEST MEMPHIS		
COUNTY:	CRITTENDEN		
DISTRICT: 01	SCALE: N/A	DRAWN BY: PC	

12/8/2020

M110800_LIGHTING.DGN

DATE REVISED	DATE FILMED	DATE REVISED	DATE FILMED
06/04/2021		12/17/2021	
09/16/2021			
11/19/2021			

FED.RD. DIST.NO.	STATE	FED.AID PROJ.NO.	SHEET NO.	TOTAL SHEETS
6	ARK.			
JOB NO.		110800	44	49

(2) ILLUMINATION DETAILS

STATE OF ARKANSAS LICENSED PROFESSIONAL ENGINEER No. 7527 JOSEPH A. SARTINI
Dec 17 2021 9:40 AM
DocuSign

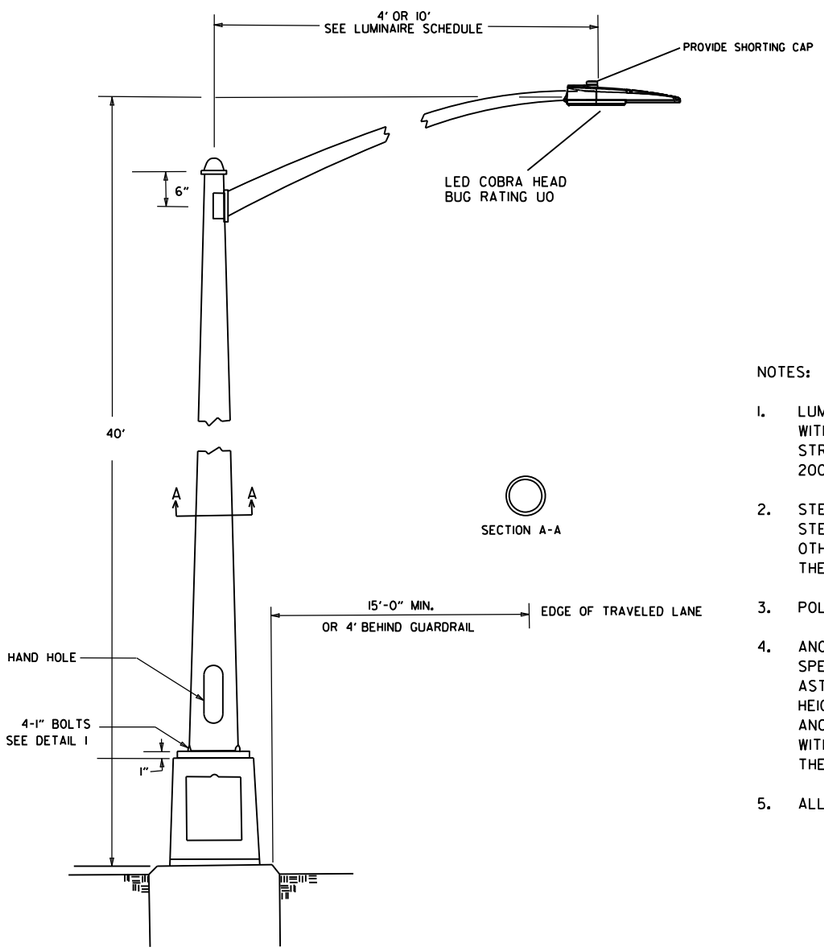

COBRA HEAD LUMINAIRE WITH BREAKAWAY TRANSFORMER BASE

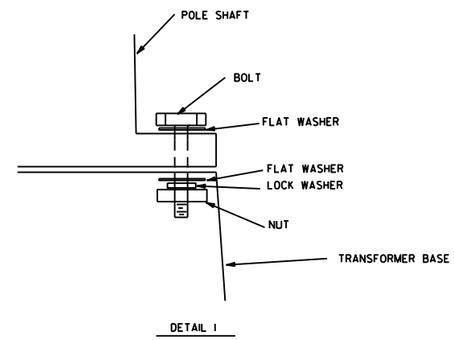

NOTES:

1. LUMINAIRE POLES SHALL MEET THE REQUIREMENTS OF 90 MPH WIND ZONE WITH A 1.3 GUST FACTOR ON THE AASHTO STANDARD SPECIFICATIONS FOR STRUCTURAL SUPPORTS FOR HIGHWAY SIGNS LUMINAIRES AND TRAFFIC SIGNALS, 2001 EDITION WITH 2003 AND 2006 INTERIMS.
2. STEEL LUMINAIRE POLES SHALL BE A MINIMUM OF 11 GAUGE. STEEL LUMINAIRE POLES SHALL BE HOT-DIPPED GALVANIZED. OTHER DIMENSIONS PER MANUFACTURER'S RECOMMENDATION AS NECESSARY TO MEET THE REQUIREMENTS OF THE SP - LED ROADWAY ILLUMINATION POLE.
3. POLE CAP OR TENON CAP SHALL BE PROVIDED.
4. ANCHOR BOLTS SHALL MEET THE REQUIREMENTS OF SECTION 714 OF THE STANDARD SPECIFICATIONS. THE TOP 8" OF ALL ANCHOR BOLTS SHALL BE GALVANIZED PER ASTM M232. ANCHOR BOLTS IN FOUNDATIONS SHALL BE 1.25" X 30" FOR MOUNTING HEIGHT OF 40' OR GREATER, 1" X 30" FOR MOUNTING HEIGHT LESS THAN 40'. ANCHOR BOLTS SHALL HAVE TOP END THREADED NOT LESS THAN 5" AND FURNISHED WITH GALVANIZED HEX NUTS, LOCK WASHERS, AND TEMPLATE. THE LOWER END OF THE BOLT SHALL BE THREADED AND FURNISHED WITH HEX NUT AND TEMPLATE.
5. ALL METAL POLES SHALL BE BONDED TO E.G.C. PER NATIONAL ELECTRICAL CODE.

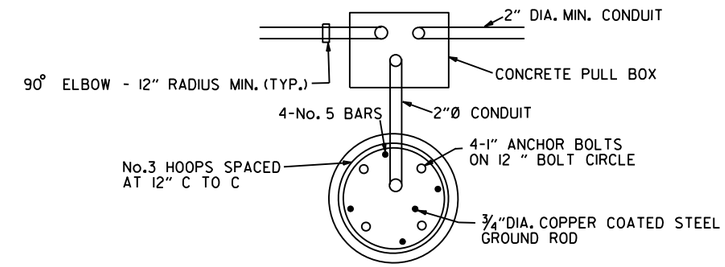

PLAN

NOTE: TOP OF FOUNDATION SHALL BE FLUSH WITH LOCAL GROUND SURFACE.

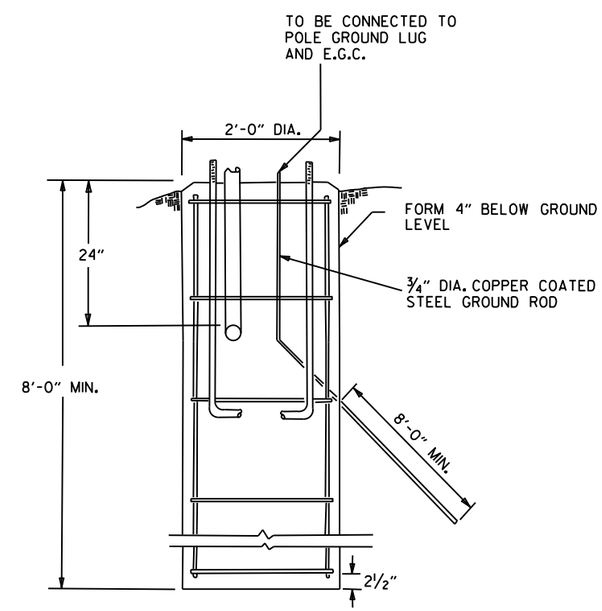

ROADWAY LUMINAIRE
POLE FOUNDATION

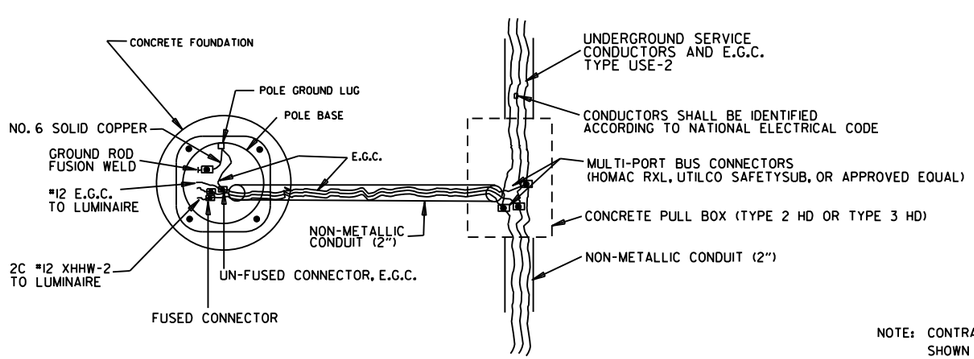

POLE FOUNDATION/PULL BOX
WIRING DETAIL

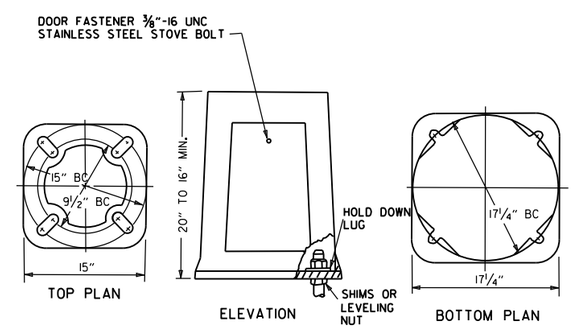

NOTE: DOOR OPENING APPROX. 7" x 8" x 10.5"
TOP AND BOTTOM BOLT HOLES WILL ACCOMMODATE MINIMUM 1" DIA. BOLTS
MATERIAL SHALL CONFORM TO COMMERCIAL DESIGNATION: A356-T6 ALLOY.

4 - HOT DIP GALVANIZED HOLD DOWN LUGS PROVIDED FOR USE UNDER ANCHOR BOLT HEX NUTS AS SHOWN.

TYPICAL BREAKAWAY TRANSFORMER BASE

NOTE: CONTRACTOR MAY SUBSTITUTE A "SLIP TYPE" BREAKAWAY BASE IN LIEU OF THE "BREAKAWAY TRANSFORMER BASE" SHOWN IN THIS DETAIL. THE SLIP BASE PROVIDED SHALL MEET BREAKAWAY CRITERIA OUTLINED IN AASHTO'S STANDARD SPECIFICATIONS FOR HIGHWAY SIGNS, LUMINAIRES AND TRAFFIC SIGNALS, EDITION OF 2001 WITH 2003 AND 2006 INTERIMS AND SHALL BE APPROVED BY THE FEDERAL HIGHWAY ADMINISTRATION. IN ADDITION, STRUCTURAL DESIGN MUST CONFORM TO AASHTO REQUIREMENTS FOR AN 90 M.P.H. WIND ZONE AND BE CERTIFIED AS SO BY A REGISTERED ENGINEER REPRESENTING THE MANUFACTURER.

LOCATION:	I-40 WESTBOUND TRUCK PARKING		
CITY:	WEST MEMPHIS		
COUNTY:	CRITTENDEN		
DISTRICT: 01	SCALE: N/A	DRAWN BY: PC	

12/8/2020

M110800_LIGHTING.DGN

DATE REVISED	DATE FILMED	DATE REVISED	DATE FILMED	FED.RD. DIST.NO.	STATE	FED.AID PROJ.NO.	SHEET NO.	TOTAL SHEETS
06/04/2021		12/17/2021		6	ARK.			
09/16/2021				JOB NO.		110800	45	49
11/19/2021								

(2) ILLUMINATION DETAILS

STATE OF ARKANSAS LICENSED PROFESSIONAL ENGINEER No. 7527 JOSEPH A. SARTINI
Dec 17 2021 9:00 AM DocuSign

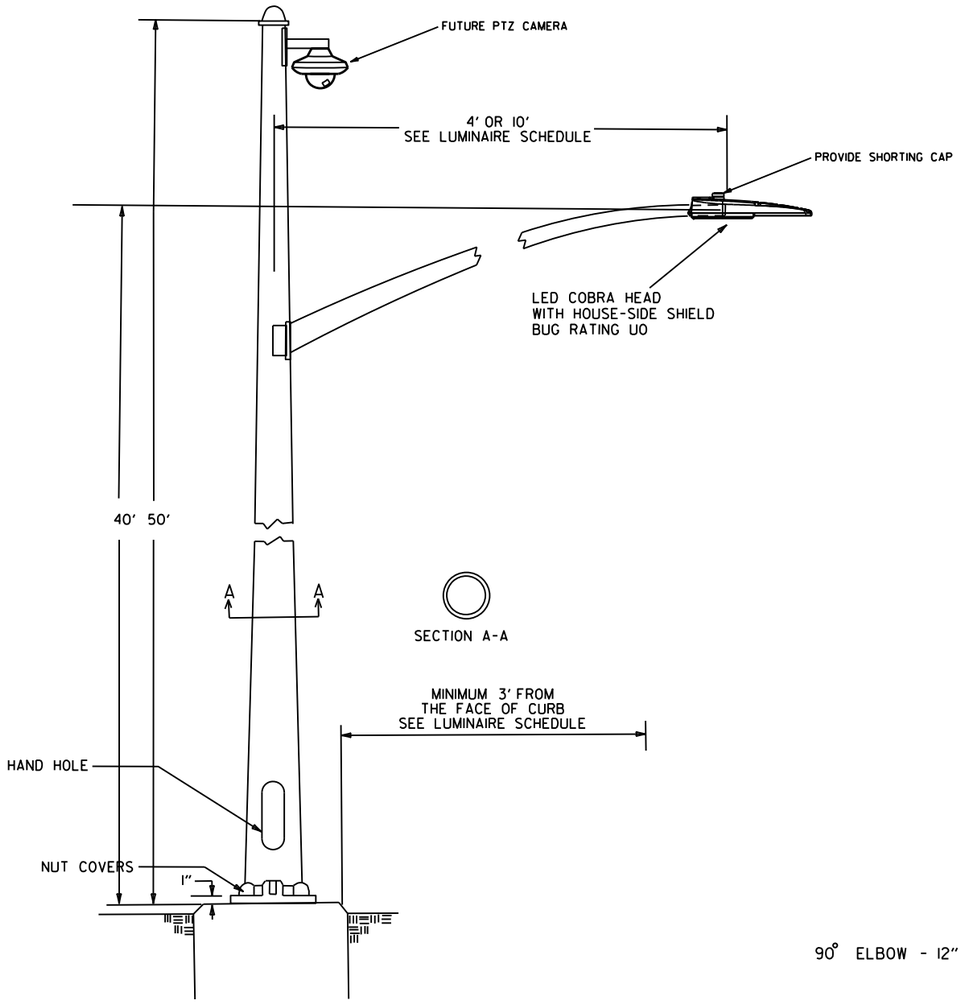

COBRA HEAD LUMINAIRE WITH SHOE BASE

NOTES:

1. LUMINAIRE POLES SHALL MEET THE REQUIREMENTS OF 90 MPH WIND ZONE WITH A 1.3 GUST FACTOR ON THE AASHTO STANDARD SPECIFICATIONS FOR STRUCTURAL SUPPORTS FOR HIGHWAY SIGNS LUMINAIRES AND TRAFFIC SIGNALS, 2001 EDITION WITH 2003 AND 2006 INTERIMS.

2. STEEL LUMINAIRE POLES SHALL BE A MINIMUM OF 11 GAUGE. STEEL LUMINAIRE POLES SHALL BE HOT-DIPPED GALVANIZED. OTHER DIMENSIONS PER MANUFACTURER'S RECOMMENDATION AS NECESSARY TO MEET THE REQUIREMENTS OF THE SP - LED ROADWAY ILLUMINATION POLE.

3. POLE CAP OR TENON CAP SHALL BE PROVIDED.

4. ANCHOR BOLTS SHALL MEET THE REQUIREMENTS OF SECTION 714 OF THE STANDARD SPECIFICATIONS. THE TOP 8" OF ALL ANCHOR BOLTS SHALL BE GALVANIZED PER ASTM M232. ANCHOR BOLTS IN FOUNDATIONS SHALL BE 1.25" X 30" FOR MOUNTING HEIGHT OF 40' OR GREATER, 1" X 30" FOR MOUNTING HEIGHT LESS THAN 40'. ANCHOR BOLTS SHALL HAVE TOP END THREADED NOT LESS THAN 5" AND FURNISHED WITH GALVANIZED HEX NUTS, LOCK WASHERS, AND TEMPLATE. THE LOWER END OF THE BOLT SHALL BE THREADED AND FURNISHED WITH HEX NUT AND TEMPLATE.

5. ALL METAL POLES SHALL BE BONDED TO E.G.C. PER NATIONAL ELECTRICAL CODE.

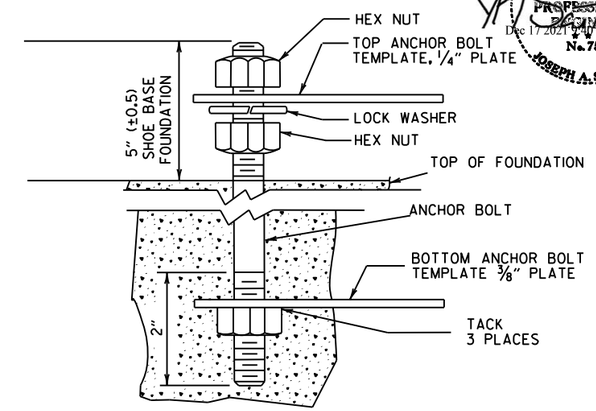

ANCHOR BOLT DETAIL

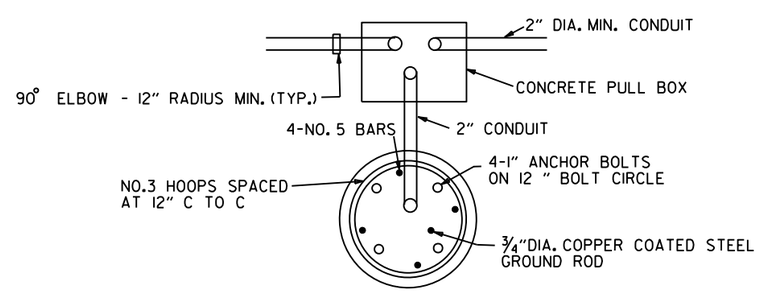

PLAN

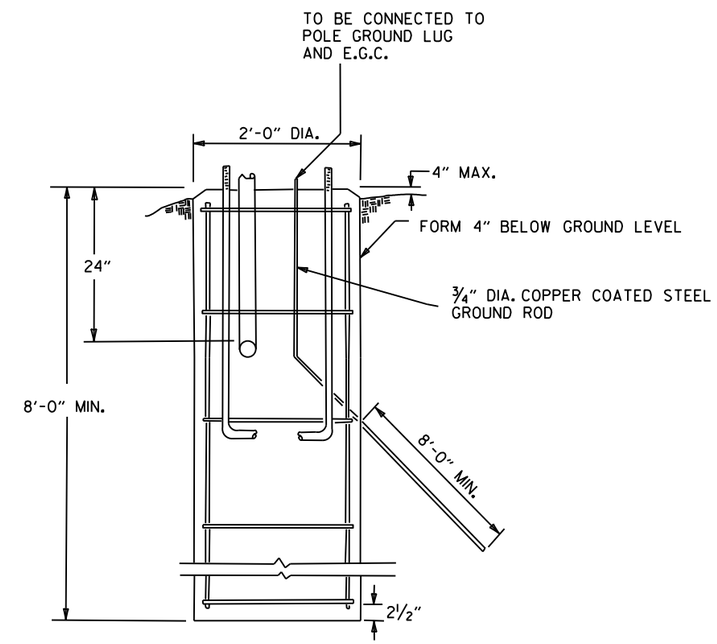

ROADWAY LUMINAIRE
POLE FOUNDATION

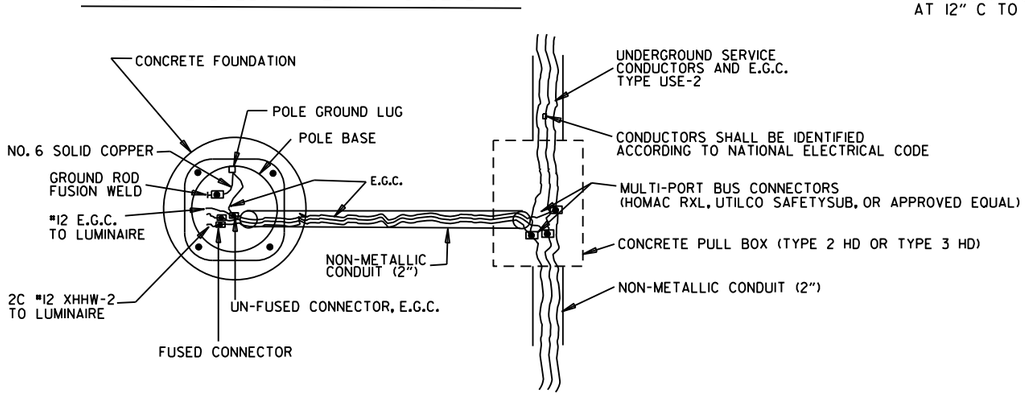

POLE FOUNDATION/PULL BOX
WIRING DETAIL

LOCATION:	I-40 WESTBOUND TRUCK PARKING		
CITY:	WEST MEMPHIS		
COUNTY:	CRITTENDEN		
DISTRICT: 01	SCALE: N/A	DRAWN BY: PC	

3/17/2021

M110800_LIGHTING.DGN

DATE REVISED	DATE FILMED	DATE REVISED	DATE FILMED
06/04/2021		12/17/2021	
09/16/2021			
11/19/2021			

FED.RD. DIST.NO.	STATE	FED.AID PROJ.NO.	SHEET NO.	TOTAL SHEETS
6	ARK.			
JOB NO.		110800	46	49

2 ILLUMINATION DETAILS

STATE OF ARKANSAS LICENSED PROFESSIONAL ENGINEER No. 7527 JOSEPH A. SARTINI

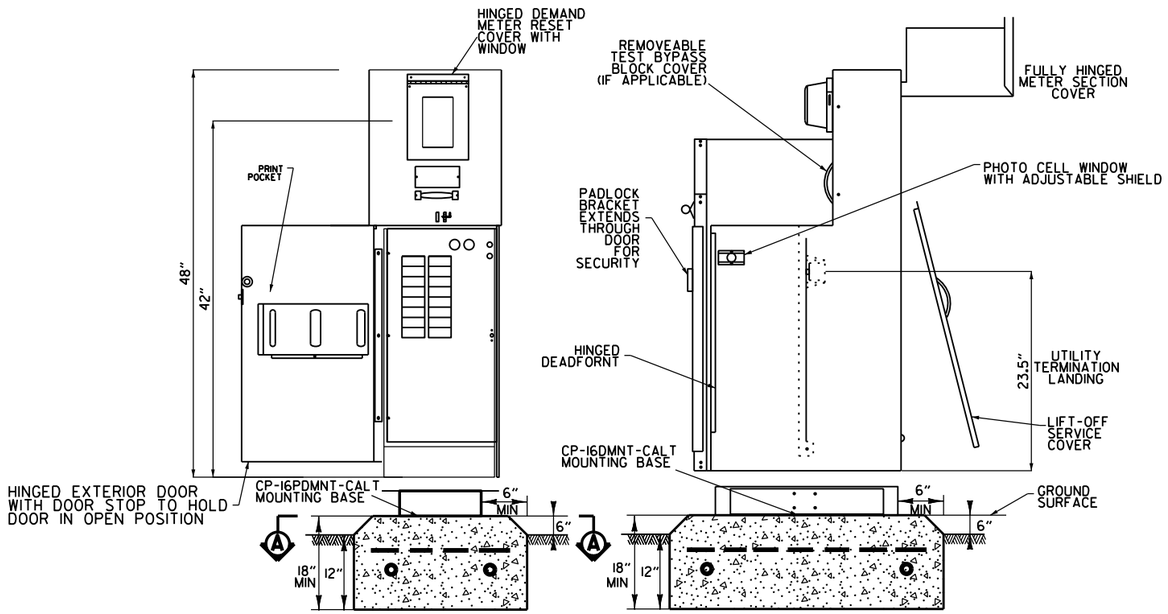

METERED COMMERCIAL PEDESTAL
100 AMP (N.T.S)

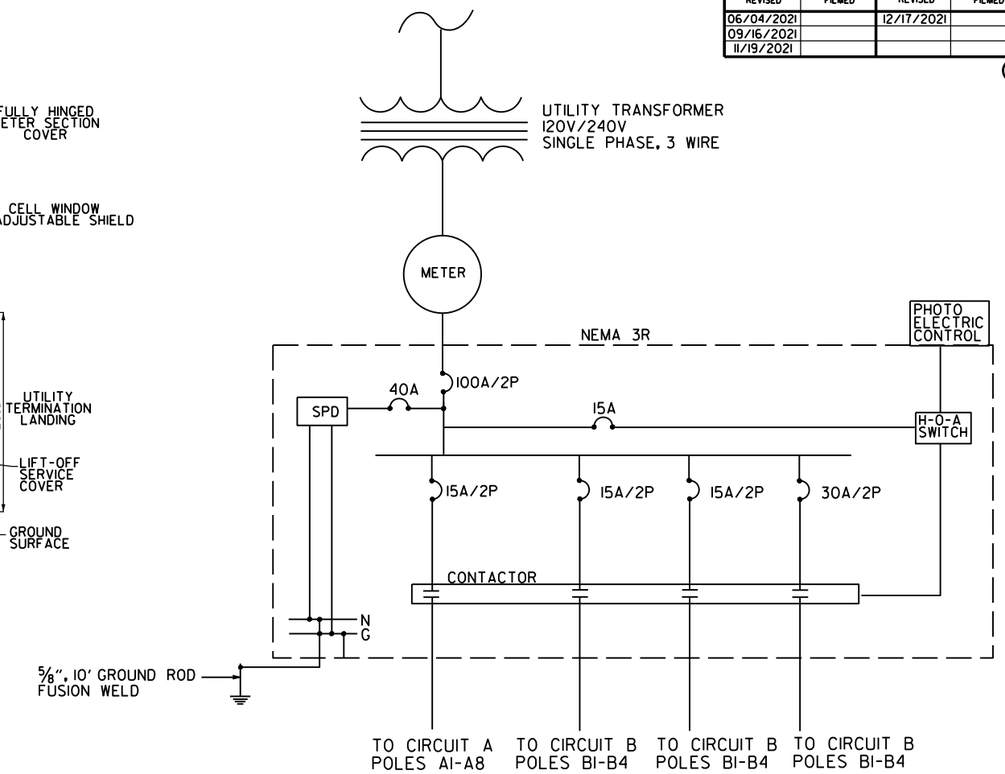

ONE-LINE DIAGRAM

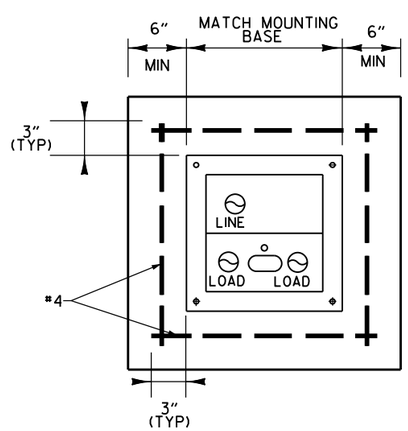

SECTION A-A

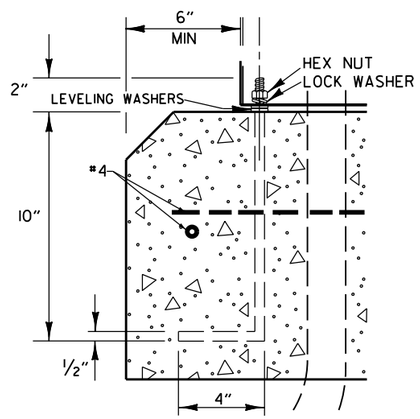

ANCHOR BOLT

NOTES:

1. CONCRETE FOR CAST-IN-PLACE FOUNDATION SHALL BE CLASS S WITH A MINIMUM 28 DAY COMPRESSIVE STRENGTH, f'c = 3,500 PSI.
2. ALL REINFORCING STEEL SHALL BE GRADE 60 AND CONFORM TO AASHTO M31 OR M53.

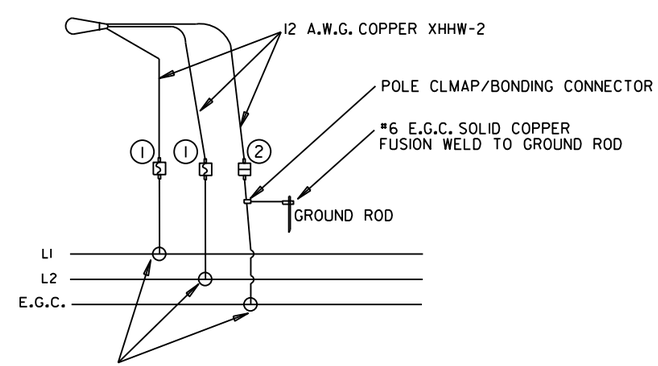

MULTI-PORT CONNECTOR
HOMAC RXL, POLARIS EDGE,
UTILCO SAFETYSUB, OR EQUIVALENT

TYPICAL WIRING FOR LUMINAIRES
THREE-WIRE CIRCUIT-CENTER GROUNDED
LUMINIARES SERVED AT 240 VAC.

(120/240 VOLT SERVICE)

LUMINAIRE WIRING SCHEMATICS

KEYED NOTES:

1. FUSED CONNECTOR - SHALL BE WATERTIGHT, UL-LISTED, AND DESIGNED AS BREAKAWAY (HOMAC FLOOD-SEAL, EATON BUSSMANN OR EQUAL). USE A FUSED CONNECTOR FOR THE LINE WIRE ON ALL POLES. USE MANUFACTURER'S RECOMMENDED FUSE SIZE.
2. UN-FUSED CONNECTOR - SHALL BE WATERTIGHT AND SHALL BE DESIGNED AS BREAKAWAY (HOMAC FLOOD-SEAL, EATON BUSSMANN, OR EQUAL).

LOCATION: I-40 WESTBOUND TRUCK PARKING
CITY: WEST MEMPHIS
COUNTY: CRITTENDEN
DISTRICT: 01 SCALE: N/A DRAWN BY: PC

3/3/2021

M110800_LIGHTING.DGN

DATE REVISED	DATE FILMED	DATE REVISED	DATE FILMED	FED.RD. DIST.NO.	STATE	FED.AID PROJ.NO.	SHEET NO.	TOTAL SHEETS
06/04/2021		12/17/2021		6	ARK.			
09/16/2021				JOB NO.		110800	47	49
11/19/2021								

2 ILLUMINATION DETAILS

STATE OF ARKANSAS LICENSED PROFESSIONAL ENGINEER No. 7527 JOSEPH A. SARTINI Dec 17, 2021 DocuSign

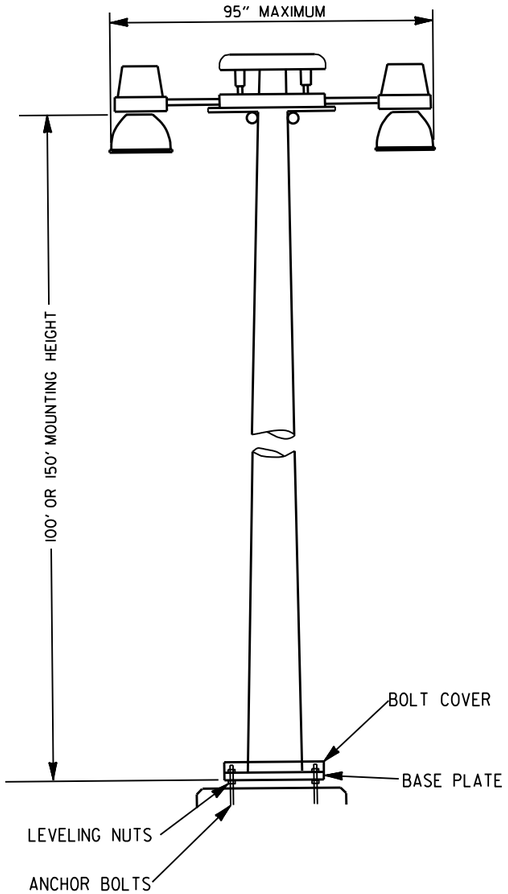

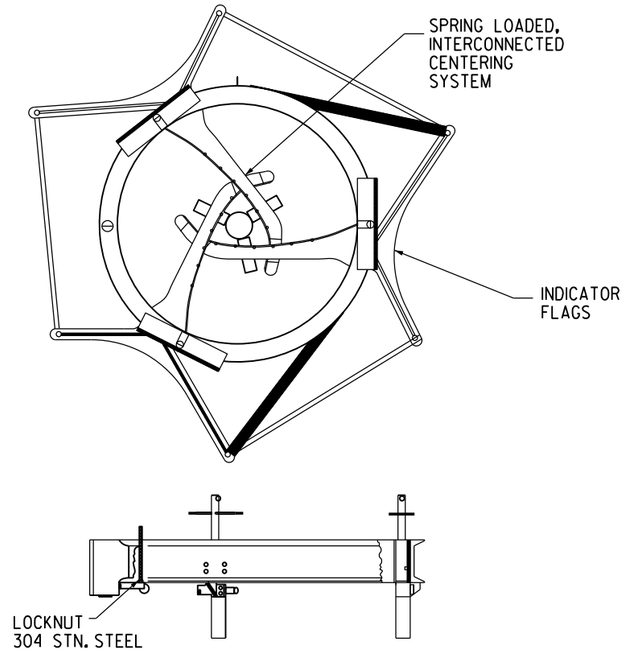

RISER SUPPORT ASSEMBLY

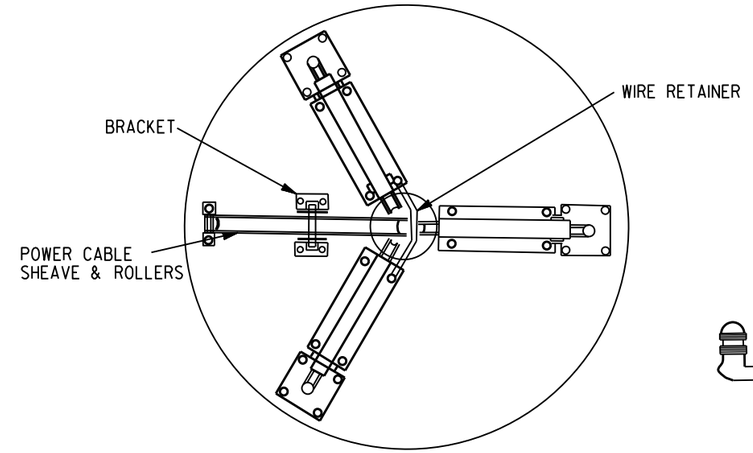

TOP VIEW

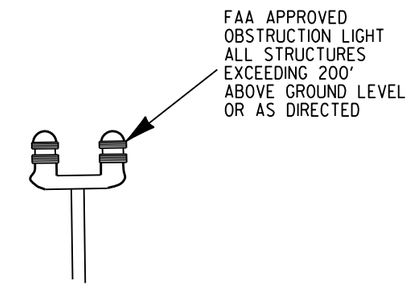

OBSTRUCTION LIGHT

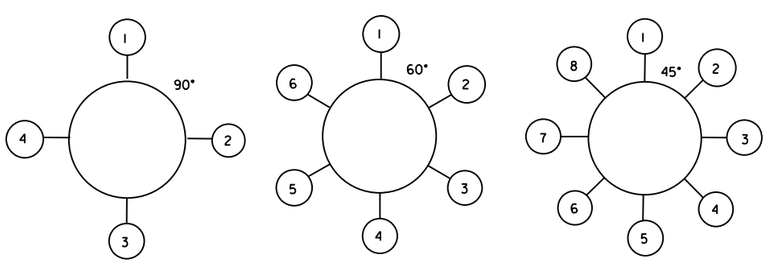

TYPICAL MAST ARM LAYOUT

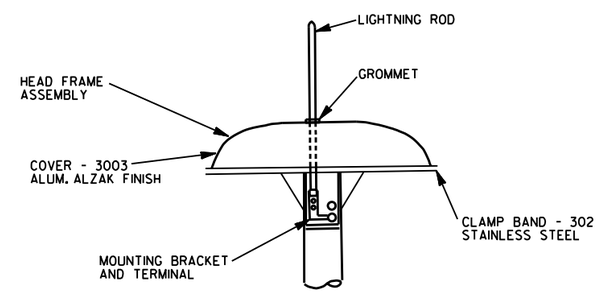

LIGHTNING ROD

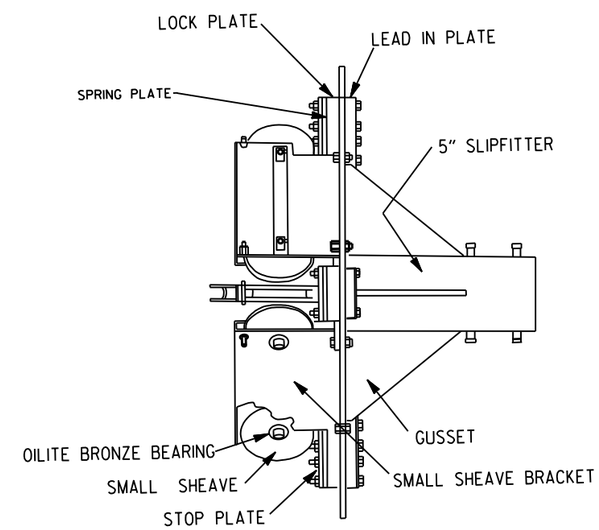

SIDE VIEW

HEAD FRAME ASSEMBLY

NOTE:
THESE DETAILS ARE NOT INTENDED TO LIMIT COMPETITION.
THE DETAILS AND SPECIAL PROVISIONS GOVERN THE MINIMUM QUALITY REQUIREMENTS CONCERNING MATERIALS AND OPERATION.

LOCATION: I-40 WESTBOUND TRUCK PARKING
CITY: WEST MEMPHIS
COUNTY: CRITTENDEN
DISTRICT: 01 SCALE: N/A DRAWN BY: PC

3/4/2021

M110800_LIGHTING.DGN

DATE REVISED	DATE FILMED	DATE REVISED	DATE FILMED
06/04/2021		12/17/2021	
09/16/2021			
11/19/2021			

FED.RD. DIST.NO.	STATE	FED.AID PROJ.NO.	SHEET NO.	TOTAL SHEETS
6	ARK.			
JOB NO.		110800	48	49

2 ILLUMINATION DETAILS

STATE OF ARKANSAS LICENSED PROFESSIONAL ENGINEER No. 7527 JOSEPH A. SARTINI Dec 2021 DocuSign

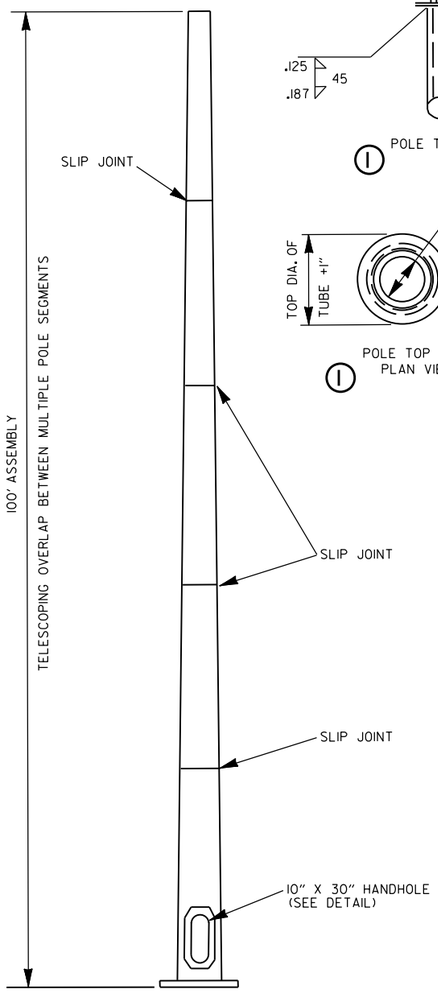

POLE DETAIL
N.T.S.

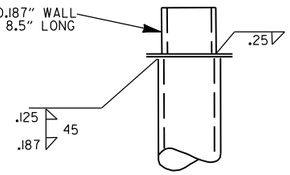

1 POLE TOP DETAIL

1 POLE TOP DETAIL PLAN VIEW

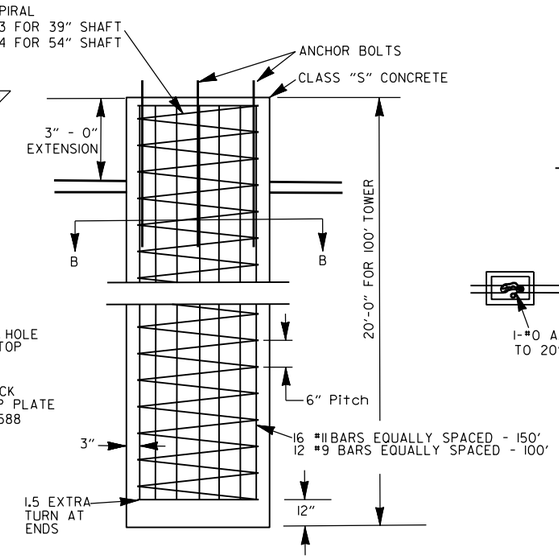

POLE FOUNDATION DETAIL
N.T.S.

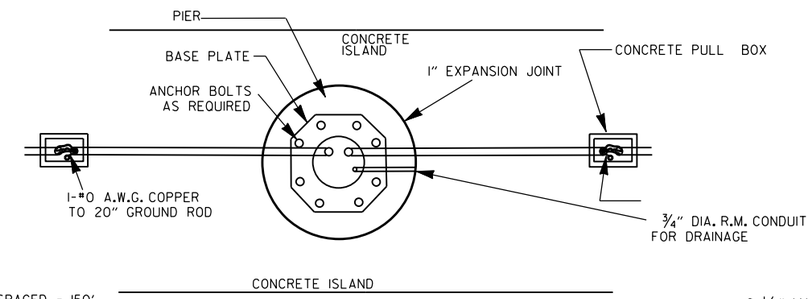

PLAN VIEW

CONCRETE ISLAND DETAILS
N.T.S.

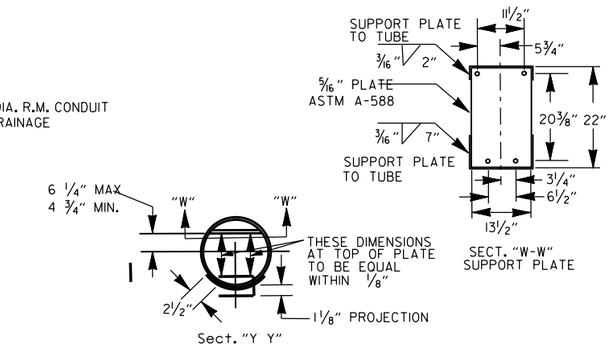

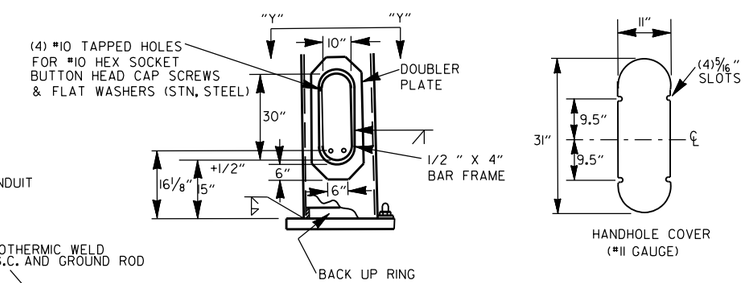

HANDHOLE AND BASE DETAILS
N.T.S.

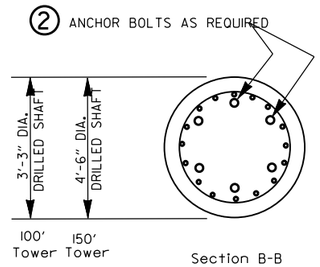

Section B-B
N.T.S.

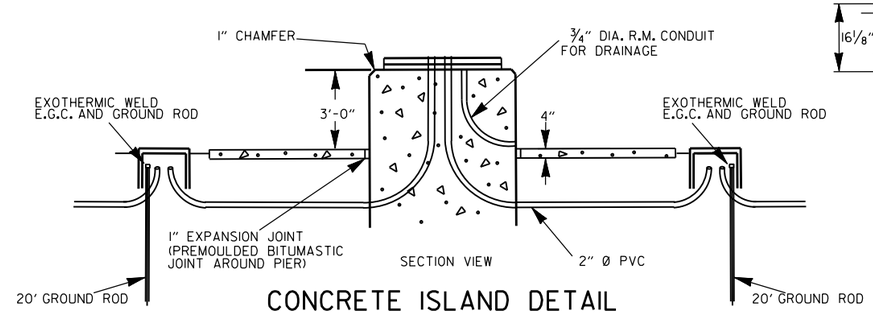

CONCRETE ISLAND DETAIL
N.T.S.

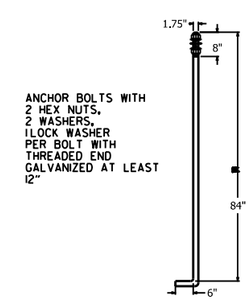

ANCHOR BOLT DETAILS
N.T.S.

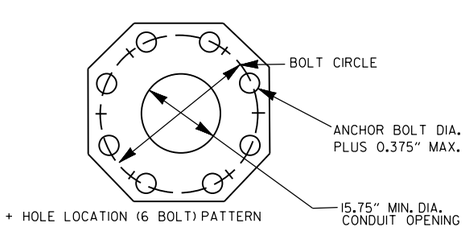

BASE PLATE DETAIL
N.T.S.

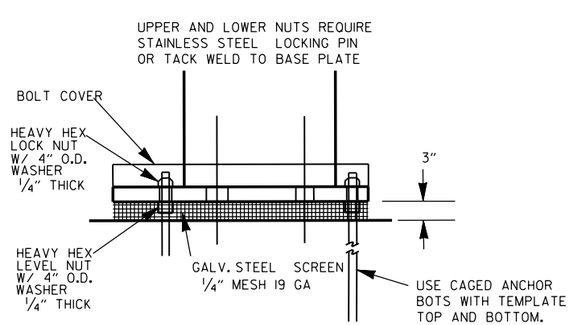

BASE PLATE ANCHOR DETAIL
N.T.S.

NOTE:

1. THESE DETAILS ARE NOT INTENDED TO LIMIT COMPETITION. THE DETAILS AND SPECIAL PROVISIONS GOVERN THE MINIMUM QUALITY REQUIREMENTS CONCERNING MATERIALS AND OPERATION.

2. POLE AND ANCHOR BOLTS ARE DESIGNED BY THE MANUFACTURER.

LOCATION: I-40 WESTBOUND TRUCK PARKING
CITY: WEST MEMPHIS
COUNTY: CRITTENDEN
DISTRICT: 01 SCALE: N/A DRAWN BY: PC

M110800_LIGHTING.DGN 3/4/2021

DATE REVISED	DATE FILMED	DATE REVISED	DATE FILMED	FED.RD. DIST.NO.	STATE	FED.AID PROJ.NO.	SHEET NO.	TOTAL SHEETS
06/04/2021		12/17/2021		6	ARK.			
09/16/2021				JOB NO.		110800	49	49
11/19/2021								

(2) ILLUMINATION DETAILS

STATE OF ARKANSAS LICENSED PROFESSIONAL ENGINEER No. 7527 JOSEPH A. SARTINI

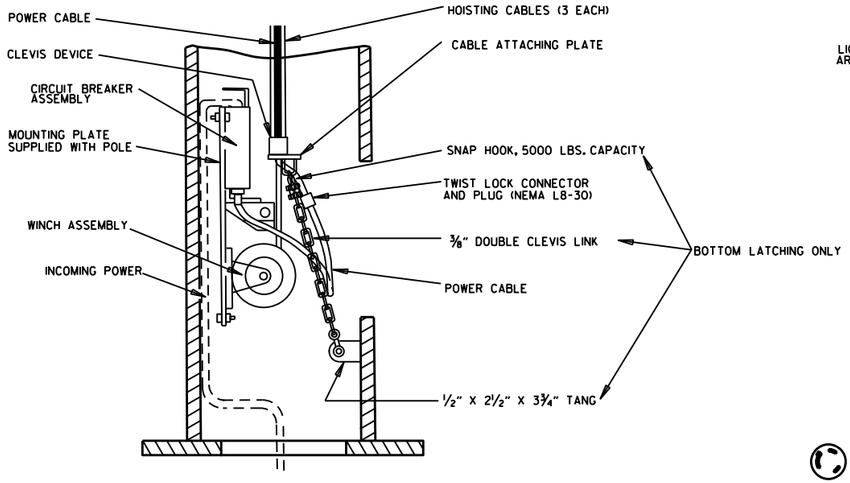

POLE BASE

NOTE: POWER INLET CABLE SHALL BE OF SUFFICIENT LENGTH TO ALLOW ENERGIZING LUMINAIRES WHEN LUMINAIRE RING IS IN THE LOWERED POSITION.

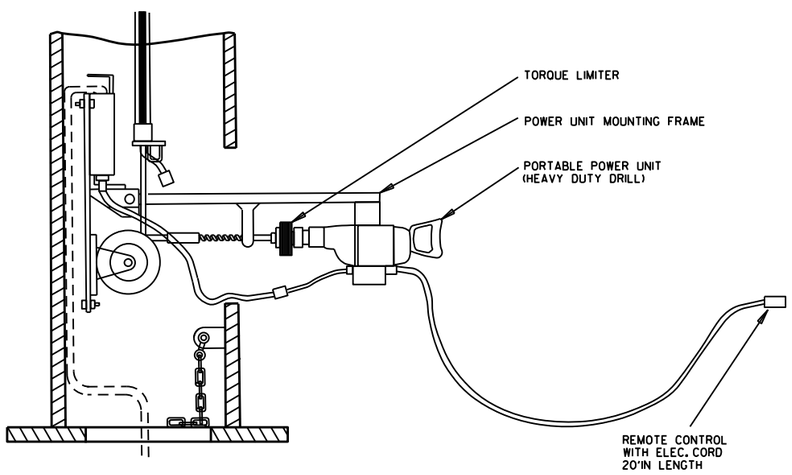

POLE BASE

(READY FOR LOWERING)

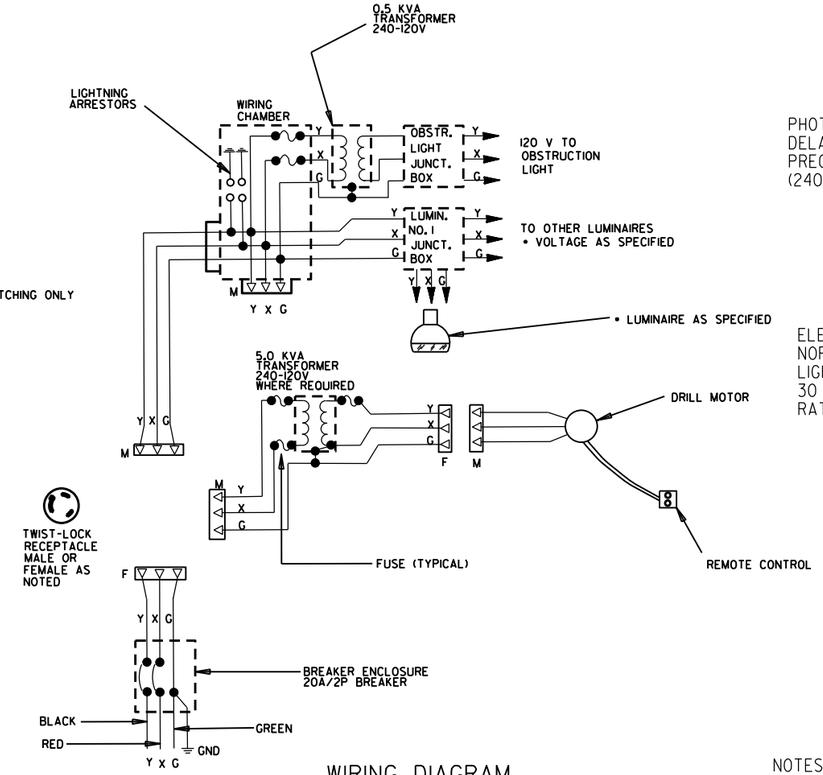

WIRING DIAGRAM

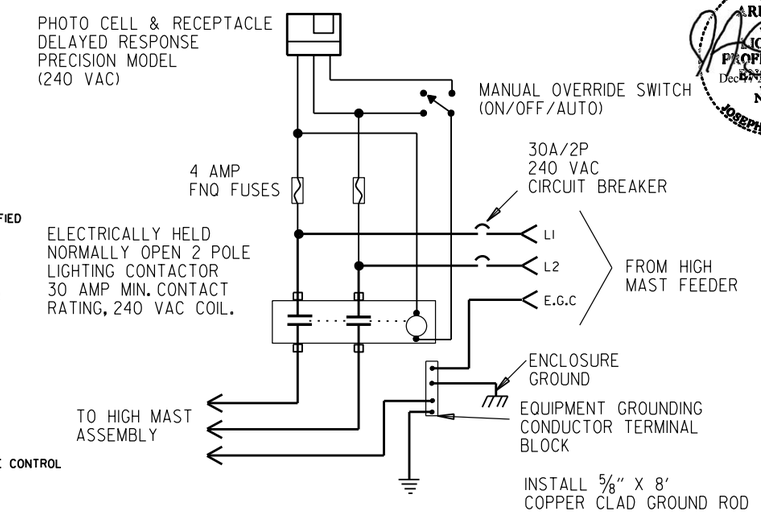

WIRING DIAGRAM FOR HIGH MAST PHOTO CONTROL AND CONTACTOR

NOTES:
1. INSTALL CONTACTOR AND EQUIPMENT IN PEDESTAL ENCLOSURE. PEDESTAL ENCLOSURE SHALL BE BUILT BY A UL LISTED INDUSTRIAL CONTROL PANEL SHOP. ASSEMBLY SHALL HAVE A UNIQUE SERIAL NUMBER AND SHALL BE LABELED WITH A "LISTED ENCLOSED UNDUSTRIAL CONTROL PANEL" UL LABEL.
2. ASSEMBLY SHALL BE LISTED FOR OPERATION AT 120/240 VAC.
3. CONDUCTORS SUPPLYING PEDESTAL FROM GROUND BOX SHOWN ON THE PLANS SHALL BE THE SAME SIZE AS THE FEEDER CIRCUIT. CONDUCTORS FROM THE PEDESTAL TO THE HIGH MAST POLE SHALL BE NO. 8 AWG. ALL CONDUIT AND CONDUCTORS FROM THE GROUND BOX ADJACENT TO THE PEDESTAL, THROUGH THE PEDESTAL, AND TO THE HIGH MAST POLE WILL NOT BE PAID FOR DIRECTLY BUT WILL BE SUBSIDIARY TO THE HIGH MAST ILLUMINATION POLE.

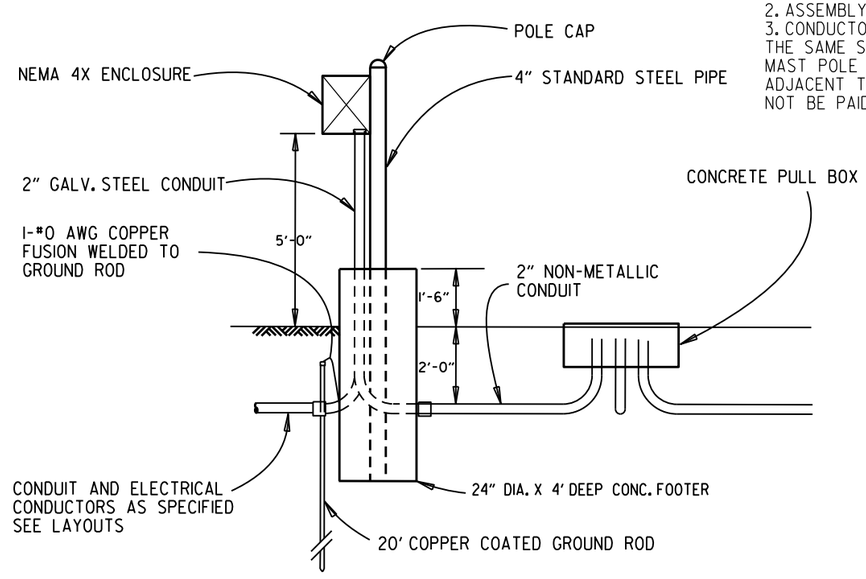

SECONDARY SERVICE PEDESTAL DETAIL

LOCATION:	I-40 WESTBOUND TRUCK PARKING		
CITY:	WEST MEMPHIS		
COUNTY:	CRITTENDEN		
DISTRICT: 01	SCALE: N/A	DRAWN BY: PC	

M110800_LIGHTING.DGN 3/4/2021

REFER TO TABULATION OF QUANTITIES FOR "W" & "B" DIMENSIONS

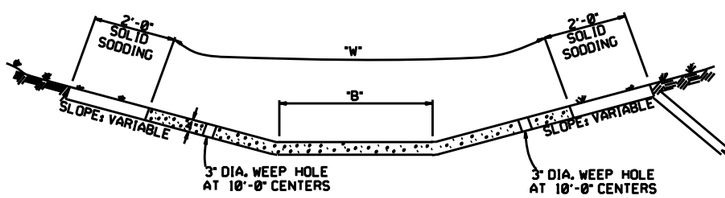

TYPE A

EXCAVATE TO NEAT LINES TO CONSTRUCT DITCH PAVING AND SOLID SODDING.

REFER TO TABULATION OF QUANTITIES FOR "W" DIMENSIONS

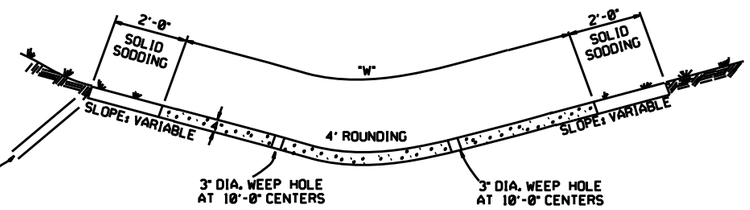

TYPE B

THE STEEL AND ADDITIONAL CONCRETE FOR THE WALLS SHALL NOT BE PAID FOR DIRECTLY, BUT SHALL BE CONSIDERED TO BE INCLUDED IN THE PRICE BID FOR "CONCRETE DITCH PAVING."

TOE WALL DEPTH MAY BE ALTERED TO 1'-0" WHEN DIRECTED BY THE ENGINEER IN ROCK EXCAVATION

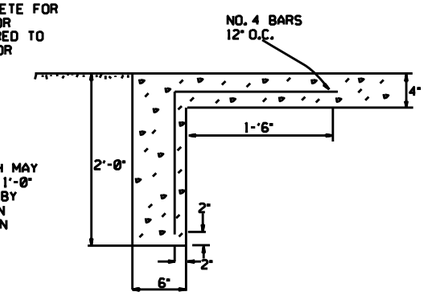

TOE WALL DETAIL FOR CONCRETE DITCH PAVING

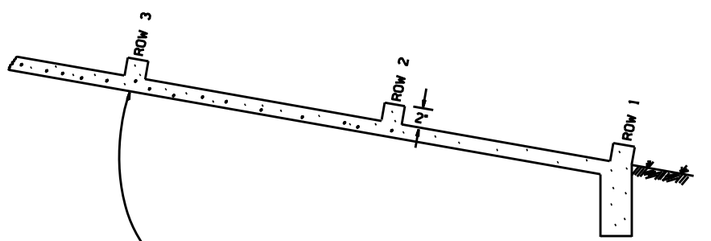

NUMBER OF ELEMENTS PER ROW VARIES WITH WIDTH OF PAVING SPECIFIED

ENERGY DISSIPATORS TO BE USED FOR THE ENTIRE LENGTH OF DITCH WHEN SLOPE OF DITCH PAVING EXCEEDS 7%. THE DISSIPATORS WILL NOT BE PAID FOR DIRECTLY, BUT SHALL BE CONSIDERED TO BE INCLUDED IN THE PRICE BID FOR CONCRETE DITCH PAVING.

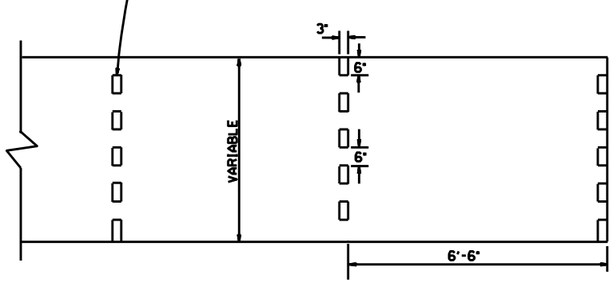

ENERGY DISSIPATORS
(NO SCALE)

GENERAL NOTES:

THE FULL WIDTH OF EACH SECTION SHALL BE POURED MONOLITHICALLY.

TOE WALLS TO BE CONSTRUCTED FULL WIDTH AT EACH END OF DITCH PAVING, AND POURED MONOLITHICALLY.

SOLID SOD ALONG DITCH PAVING TO BE PLACED WITHIN 14 DAYS OF DITCH PAVING CONSTRUCTION.

1" WIDE TRANSVERSE EXPANSION JOINTS SHALL BE PLACED IN CONCRETE DITCH PAVING AT 45' INTERVALS. THE SPACE SHALL BE FILLED WITH APPROVED JOINT FILLER COMPLYING WITH AASHTO M213.

DATE	REVISION	DATE FILMED
12-8-16	CORRECTED ENERGY DISSIPATOR DRAWING AND NOTE	
11-17-10	ADDED GENERAL NOTE	
6-2-94	ADDED GENERAL NOTE ABOUT SOLID SODDING	
11-30-8	ELIMINATED MIN. ROWS OF ELEMENTS	111-30-89
7-15-88	REVISED DISSIPATOR NOTE	653-7-15-88
4-3-87	REVISED ENERGY DISSIPATOR	671-4-3-87
1-9-87	MODIFIED NOTE ON ENERGY DISS.	532-1-9-87
11-3-86	ADDED NOTE TO ENERGY DISS.	599-12-1-86
11-1-84	ENERGY DISSIPATOR DETAILS ADDED	508-11-1-84
11-1-84	EXCAVATION DETAILS ADDED TYPED A & B	
10-2-72	REVISED AND REDRAWN	508-10-2-72

ARKANSAS STATE HIGHWAY COMMISSION

CONCRETE DITCH PAVING

STANDARD DRAWING CDP-1

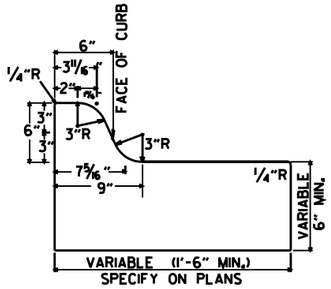

TYPE A

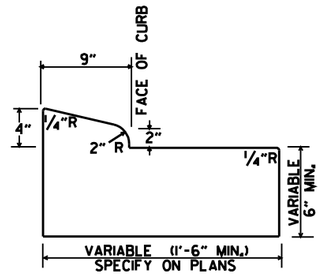

TYPE B-1

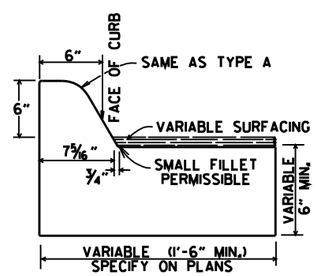

TYPE C

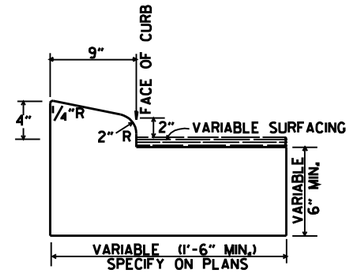

TYPE B-2

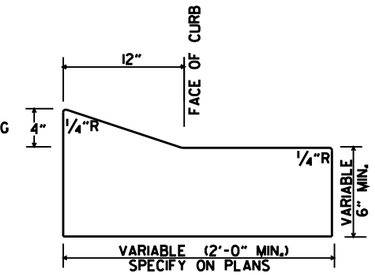

TYPE E-1

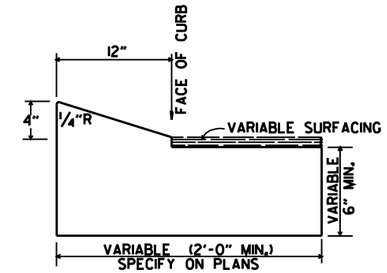

TYPE E-2

CONCRETE COMBINATION CURB AND GUTTER

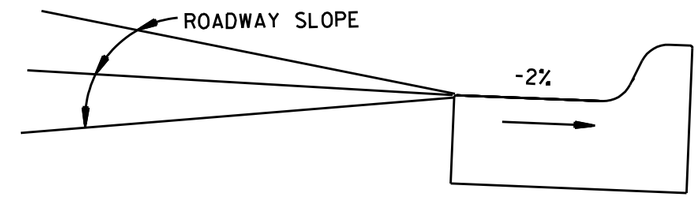

DETAIL OF GUTTER SLOPE

GUTTER SHALL BE CONSTRUCTED ON 2% SLOPE AWAY FROM ROADWAY, REGARDLESS OF ROADWAY SLOPE.

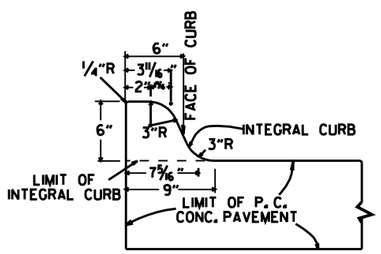

TYPE A

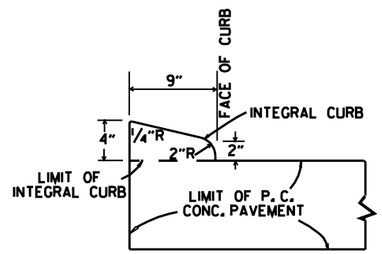

TYPE B

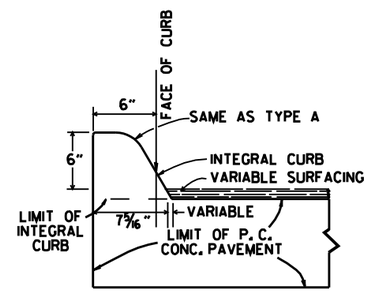

TYPE C

INTEGRAL CURB

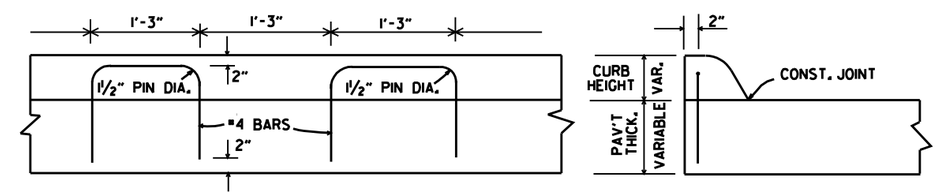

ALTERNATE CONSTRUCTION METHOD FOR INTEGRAL CURB

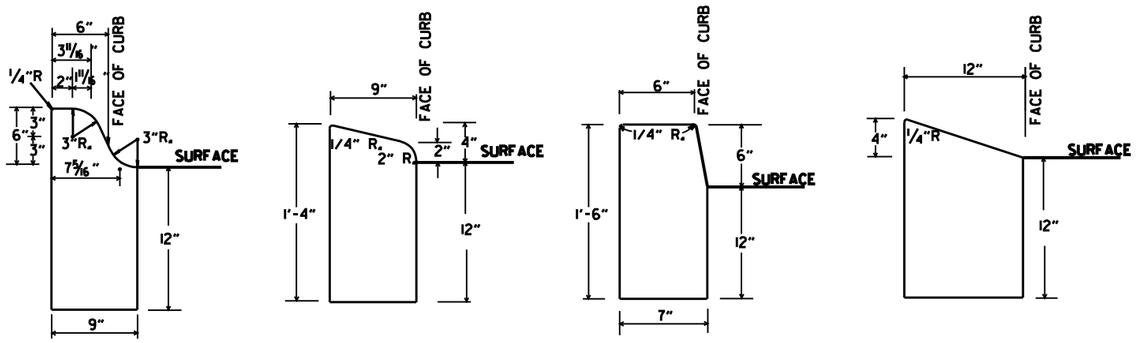

TYPE A TYPE B TYPE D TYPE E

CONCRETE CURB

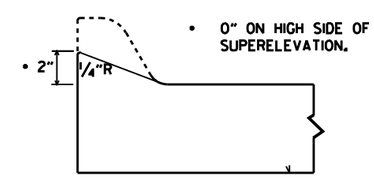

NOTE: USE MODIFIED CURB AS SPECIFIED ON STD. DR-1. COMPENSATION FOR MODIFIED CURB WILL BE CONSIDERED INCLUDED IN THE PRICE BID FOR THE TYPE OF CURB OR CURB AND GUTTER SPECIFIED.

DETAILS OF MODIFIED CURB

DATE	REVISION	DATE FILMED
11-29-07	REVISED GUTTER SLOPE & MODIFIED CURB DETAILS	
11-10-05	ADDED DETAILS OF TYPE E CURBS	
11-16-01	REVISED CONCRETE CURB TYPE B	
11-18-98	REVISED MODIFIED CURB	
6-2-94	ADDED NOTE TO SPECIAL MODIFIED CURB	
8-5-93	CORRECTED GUTTER SLOPE	8-5-93
10-1-92	ADDED DETAILS OF GUTTER SLOPE	10-1-92
5-24-90	ADDED DETAILS OF MODIFIED CURB	5-24-90
11-30-89	VARIBLE DEPTH TYPE A & B I	11-30-89
7-15-88	REVISED MODIFIED CURB	630-7-15-88
11-1-73	REVISED MODIFIED CURB	500-11-1-73
10-2-72	REVISED AND REDRAWN	512-10-2-72

ARKANSAS STATE HIGHWAY COMMISSION

CURBING DETAILS

STANDARD DRAWING CG-1

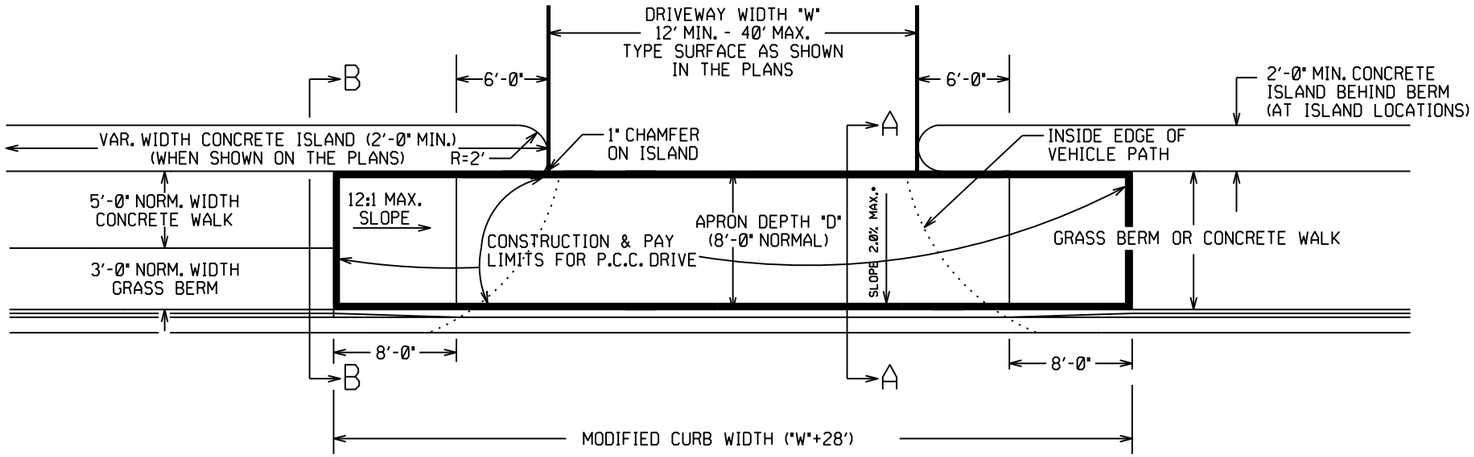

PLAN VIEW

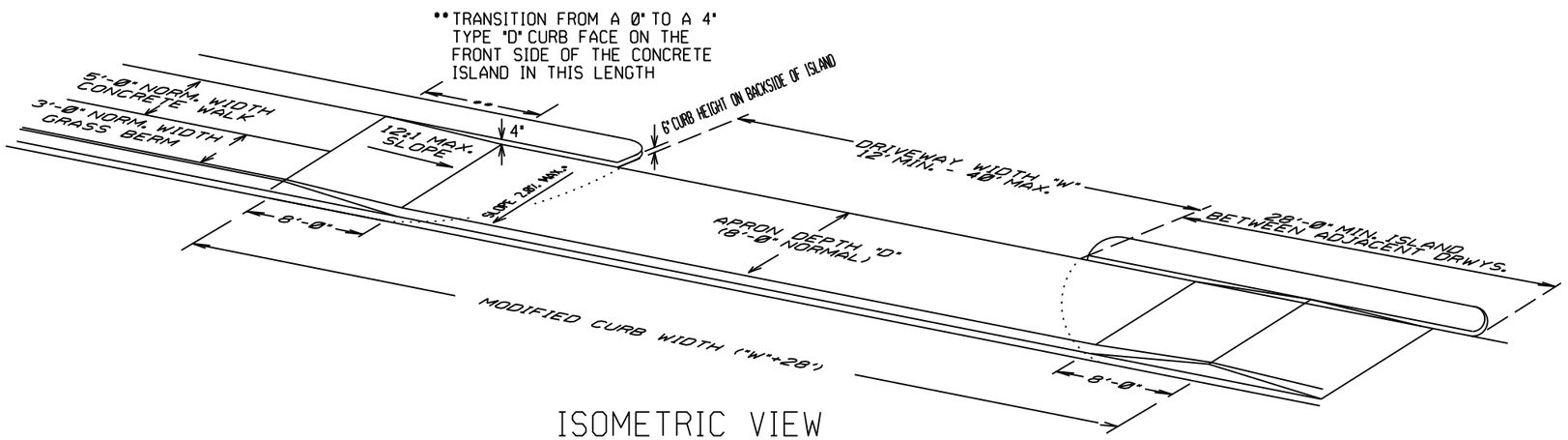

ISOMETRIC VIEW

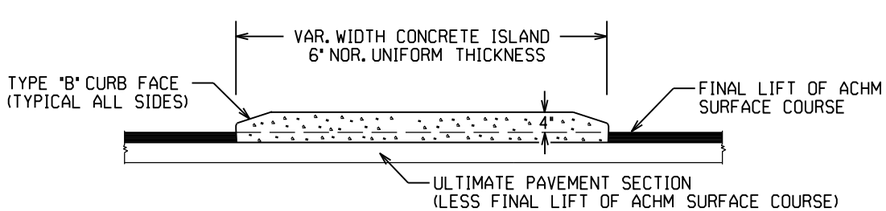

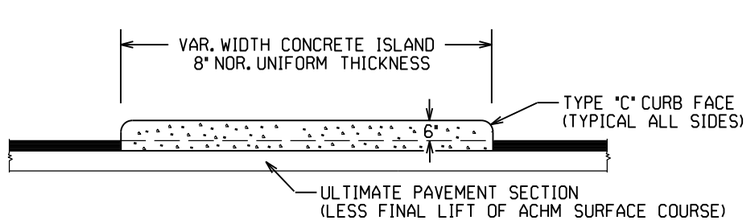

CURBED ISLANDS FOR CHANNELIZATION

REFER TO PLANS FOR TYPE OF CURB FACE TO BE USED. NO DIRECT PAYMENT WILL BE MADE FOR THE CURB FACES SHOWN ON THE ISLAND DETAILS. PAYMENT FOR THE CURB FACE WILL BE INCLUDED IN THE UNIT PRICE BID FOR THE ITEM "CONCRETE ISLAND".

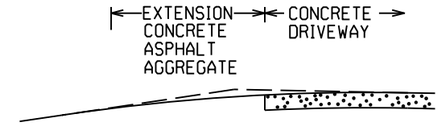

EXTENSION TYPICAL SECTIONS

1: CONCRETE - 6" P.C. CONCRETE DRIVEWAY

2: ASPHALT - 2" ACHM SURFACE COURSE (1/2")
4" ACHM BINDER COURSE (1") OR
4" ACHM BASE COURSE (1-1/2")

3: ASPHALT - 2" ACHM SURFACE COURSE (1/2")
7" AGGREGATE BASE COURSE

4: AGGREGATE - 6" AGGREGATE BASE COURSE

THE TYPE OF EXTENSION SHALL BE AS SHOWN IN THE PLANS. THE CONTRACTOR MAY, WITH THE APPROVAL OF THE ENGINEER, SUBSTITUTE A LOWER NUMBERED TYPE OF EXTENSION IN LIEU OF THE TYPE SPECIFIED IN THE PLANS, BUT AT NO ADDITIONAL COST TO THE DEPARTMENT.

DRIVEWAY EXTENSION DETAILS

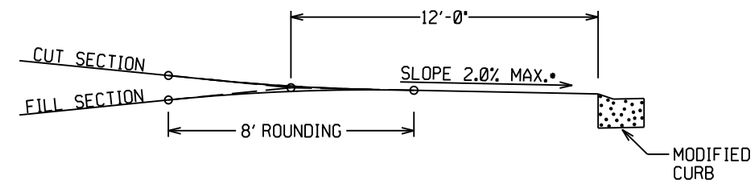

DRIVEWAY VERTICAL ALIGNMENT DETAILS

- NOTE: DRIVEWAYS MAY NOT BE SLOPED AWAY FROM THE ROADWAY UNLESS APPROVED BY THE ENGINEER.

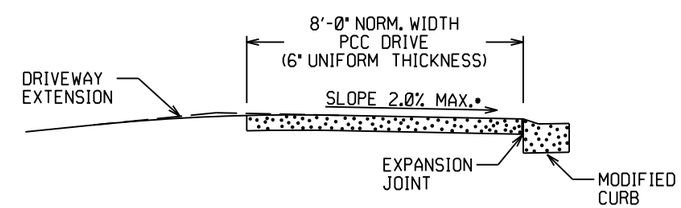

SECTION A-A

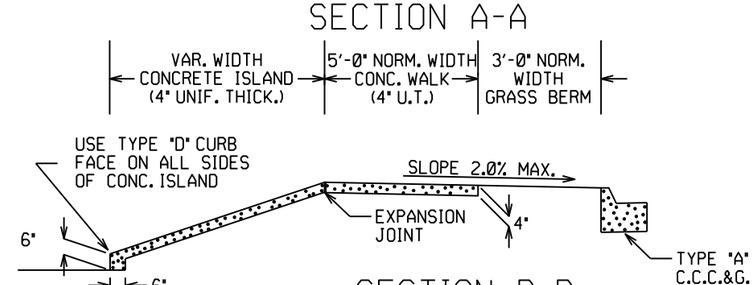

SECTION B-B
CURBED ISLAND BEHIND WALK

DATE REV	DATE FILMED	DESCRIPTION
11-07-19		REVISED WALK DETAILS
2-27-14		REVISED PLAN & ISOMETRIC VIEW
11-29-07		ADDED CHANNELIZATION ISLAND WITH TYPE C CURB FACE & REVISED DRIVEWAY SLOPE NOTE & VERTICAL ALIGNMENT DETAIL
11-10-05		REV. APRON SLOPE & DEPTH OF AGG. BASE.
8-22-02		ADDED ISLAND DETAILS & NOTES
3-30-00		REV. MOD. CURB WIDTH & TRANS. NOTE
11-19-98		REVISED NOTES
11-18-98		REDRAWN AND REISSUED

ARKANSAS STATE HIGHWAY COMMISSION

DETAILS OF DRIVEWAYS & ISLANDS

STANDARD DRAWING DR-1

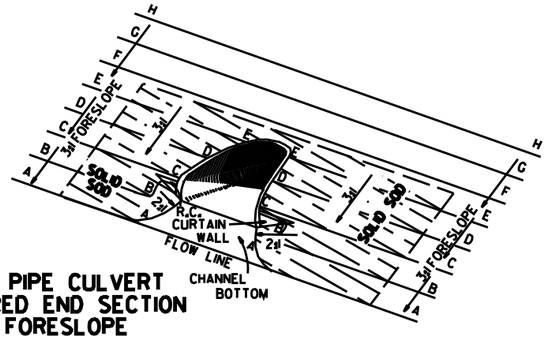

TYPICAL PIPE CULVERT
WITH FLARED END SECTION
& 3:1 FORESLOPE

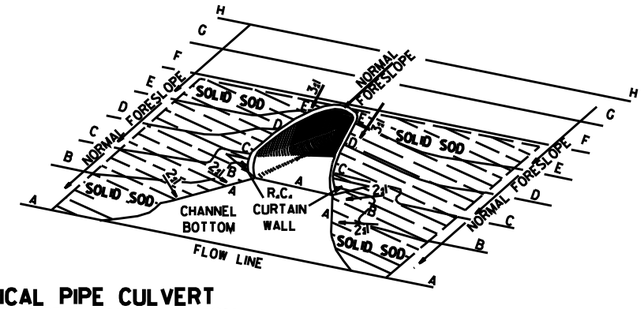

TYPICAL PIPE CULVERT
WITH FLARED END SECTION
& FLATTENED ADJACENT SLOPES

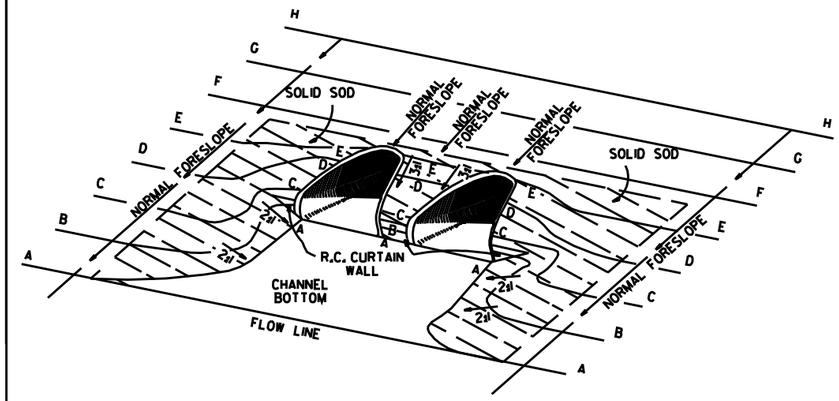

TYPICAL MULTIPLE PIPE CULVERT
WITH FLARED END SECTIONS
& FLATTENED ADJACENT SLOPES

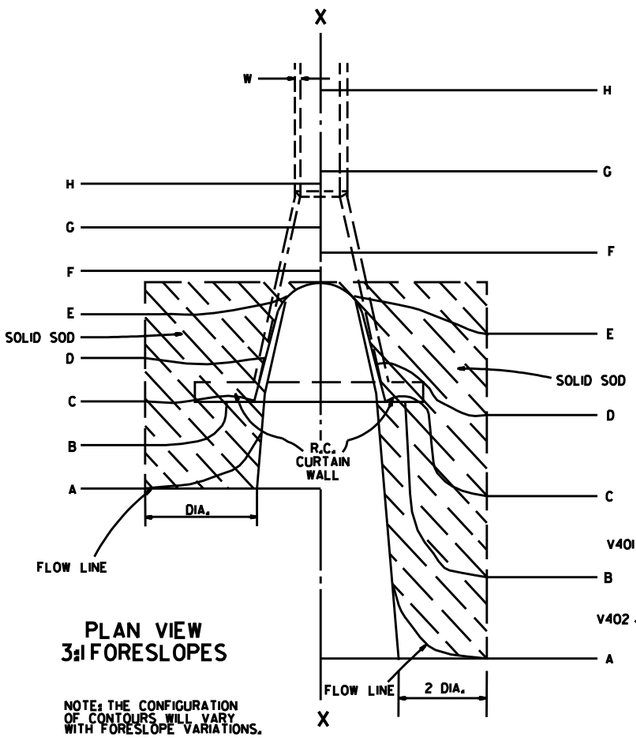

PLAN VIEW
3:1 FORESLOPES

NOTE: THE CONFIGURATION OF CONTOURS WILL VARY WITH FORESLOPE VARIATIONS.

PLAN VIEW
FLATTENED FORESLOPES

R.C. CURTAIN WALL DIMENSIONS & QUANTITIES

PIPE DIA.	H_1	L_1	L	L (DBL.)/2	SINGLE R.C.P.C. CONC.	SINGLE R.C.P.C. REINF. STEEL	DOUBLE R.C.P.C. CONC.	DOUBLE R.C.P.C. REINF. STEEL
					CU. YDS.	LBS.	CU. YDS.	LBS.
18"	11½"	3'-5"	8'-0"	6'-3"	0.31	27.7	0.45	39.5
24"	1'-0½"	4'-6"	9'-6"	7'-6"	0.37	33.4	0.53	48.0
30"	1'-3½"	5'-7"	11'-0"	9'-0"	0.45	39.0	0.67	59.0
36"	1'-7"	6'-8"	13'-0"	10'-6"	0.58	52.6	0.83	73.9
42"	2'-1½"	7'-3"	15'-6"	12'-0"	0.82	77.1	1.10	100.7
48"	2'-5"	7'-10"	17'-0"	13'-0"	0.98	94.9	1.27	120.4
54"	2'-9½"	8'-5"	18'-6"	14'-0"	1.16	115.8	1.47	143.7
60"	3'-4"	9'-0"	20'-6"	15'-6"	1.47	149.7	1.84	180.3
72"	4'-5"	10'-2"	25'-6"	18'-6"	2.31	232.6	2.73	271.0

NOTE: QUANTITIES SHOWN ARE FOR ONE (1) CURTAIN WALL.

REINFORCING STEEL SCHEDULE

PIPE DIA.	SINGLE R.C. PIPE CULVERT H401 L	NO.	H402 L	NO.	V401 L	NO.	V402 L	NO.	DOUBLE R.C. PIPE CULVERT H401 L	NO.	H402 L	NO.	H403 L	NO.	V401 L	NO.	V402 L	NO.
18"	7'-8"	2	1'-11½"	4	1'-7½"	8	8"	8	12'-2"	2	1'-11½"	4	8"	2	1'-7½"	10	8"	14
24"	9'-2"	2	2'-2"	4	1'-8½"	10	8"	9	14'-8"	2	2'-2"	4	8"	2	1'-8½"	12	8"	18
30"	10'-8"	2	2'-4½"	4	1'-11½"	10	8"	12	17'-8"	2	2'-4½"	4	8"	2	1'-11½"	14	8"	22
36"	12'-8"	2	2'-10"	6	2'-3"	12	8"	14	20'-8"	2	2'-10"	6	8"	3	2'-3"	14	8"	28
42"	15'-2"	2	3'-9½"	8	2'-9½"	16	8"	15	23'-8"	2	3'-9½"	8	8"	4	2'-9½"	18	8"	30
48"	16'-8"	2	4'-3"	10	3'-1"	18	8"	16	25'-8"	2	4'-3"	10	8"	5	3'-1"	20	8"	32
54"	18'-2"	2	4'-8½"	12	3'-5½"	20	8"	17	27'-8"	2	4'-9"	12	8"	6	3'-5½"	22	8"	34
60"	20'-2"	2	5'-5"	14	4'-0"	24	8"	18	30'-8"	2	5'-5"	14	8"	7	4'-0"	26	8"	36
72"	25'-2"	2	7'-4"	18	5'-1"	30	8"	20	36'-8"	2	7'-4"	18	8"	9	5'-1"	33	8"	40

ALL REINFORCING STEEL #4 BARS @ 6" O.C.

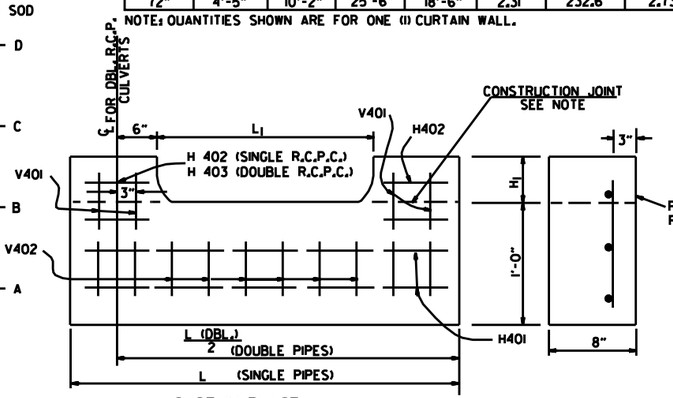

CAST-IN-PLACE

NOTE: THE PORTION OF THE R.C. CURTAIN WALL BENEATH THE FLARED END SECTION (LOWER 1'-0") SHALL BE PLACED MONOLITHICALLY. THE FLARED END SECTION SHALL THEN BE SET IN PLACE & THE REMAINING PORTIONS OF THE R.C. CURTAIN WALL PLACED.

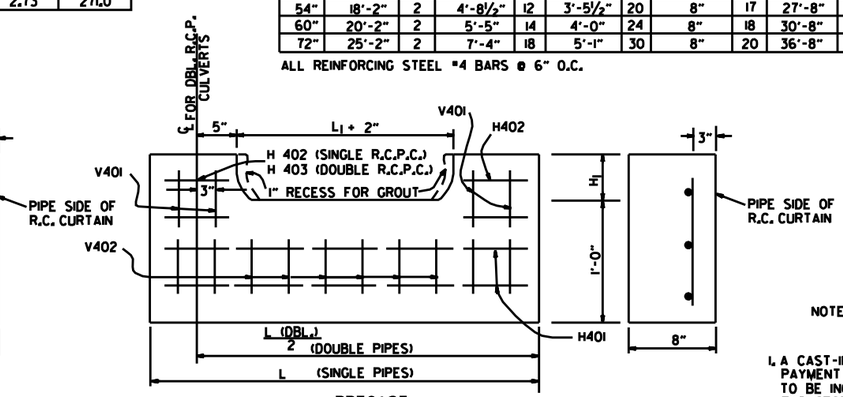

PRECAST

NOTE: THE PRECAST CURTAIN WALL WILL BE SET AND BACKFILLED WITH COMPACTED MATERIAL. THE FLARED END SECTION SHALL THEN BE SET IN PLACE AND THE 1" RECESS FILLED WITH GROUT. WHERE "L" EXCEEDS 11' THE CURTAIN WALL MAY BE CAST IN TWO (2) OR MORE SECTIONS. THE METHOD OF JOINING THE SECTIONS FOR INSTALLATION SHALL BE APPROVED BY THE ENGINEER.

R.C. CURTAIN WALL DETAILS

SOLID SODDING

PIPE DIA.	SINGLE R.C.P.C. 3:1	4:1	6:1	DOUBLE R.C.P.C. 3:1	4:1	6:1
	SQ. YDS.			SQ. YDS.		
18"	5	7	12	6	8	13
24"	8	12	19	9	13	20
30"	13	18	29	14	19	30
36"	17	26	41	18	28	43
42"	23	35	55	25	37	57
48"	29	46	68	31	48	70
54"	35	57	85	37	59	87
60"	45	62	104	48	65	107
72"	64	92	156	67	95	159

NOTE: QUANTITIES SHOWN ABOVE ARE FOR ONE (1) END OF F.E.S.

GENERAL NOTES

1. A CAST-IN-PLACE OR PRECAST CURTAIN WALL MAY BE USED. PAYMENT FOR THE CURTAIN WALL SHALL BE CONSIDERED TO BE INCLUDED IN THE UNIT PRICE BID EACH FOR FLARED END SECTIONS OF THE SEVERAL SIZES, WHICH PRICE SHALL BE FULL COMPENSATION FOR FURNISHING ALL MATERIALS INCLUDING REINFORCING STEEL AND CONCRETE; FOR FORMS, MIXING AND PLACING; FOR EXCAVATION AND BACKFILL, AND FOR ALL LABOR, TOOLS, EQUIPMENT AND INCIDENTALS NECESSARY TO COMPLETE THE WORK.
2. ALL EXPOSED EDGES SHALL BE CHAMFERED ¾".
3. CONCRETE FOR CURTAIN WALL SHALL MEET THE REQUIREMENTS FOR CLASS A OR S CONCRETE AS PROVIDED IN SECTION 802 OF THE STANDARD SPECIFICATIONS OR FOR PAVING CONCRETE AS PROVIDED IN SECTION 501 OF THE STANDARD SPECIFICATIONS.
4. WELDED WIRE MESH 3 × 3 W/10 × W10 MAY BE USED IN LIEU OF REINFORCING BARS.

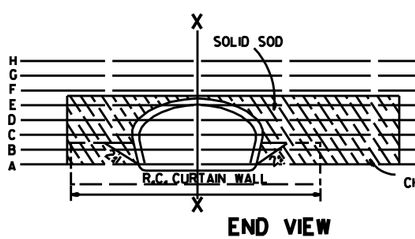

END VIEW

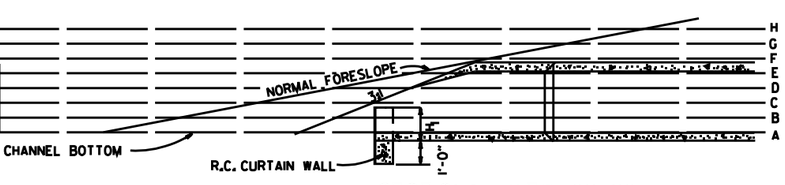

SECTIONAL VIEW "X-X"

DATE	REVISION	FILMED
10-18-96	ADDED NOTE TO SOLID SODDING	
10-12-95	CORRECTED SPELLING	
11-3-94	ADDED GENERAL NOTE NO. 4	
8-15-91	REV. CURTAIN WALL QUANT. STEEL SCH. & SOLID SOD QUANT.	
3-2-81	ALLOW PRECAST IN 2 OR MORE PIECES CHAMFER EDGES	
5-15-80	ADDED PRECAST WALL & GENERAL NOTES	
10-2-72	REVISED AND REDRAWN	

ARKANSAS STATE HIGHWAY COMMISSION

FLARED END SECTION

STANDARD DRAWING FES-1

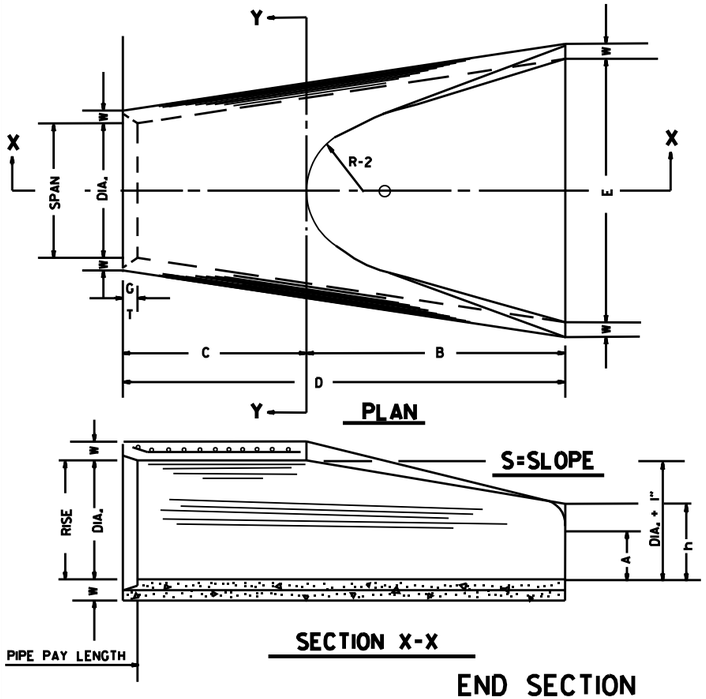

TABLE OF DIMENSIONS

DIA.	WALL	A	B	C	D	E	S	DIA. + 1"	P	R-1	R-2	G-T	WT.	h
18"	2 1/2"	9"	2'-3"	3'-10"	6'-1"	3'-0"	3:1	19"	29"	15 1/2"	12"	2"	1000	1'-0 1/2"
24"	3"	9 1/2"	3'-7 1/2"	2'-6"	6'-1 1/2"	4'-0"	3:1	25"	33 3/16"	16 11/16"	14"	2 1/2"	1600	1'-1 1/2"
30"	3 1/2"	1'-0"	4'-6"	1'-7 3/4"	6'-1 3/4"	5'-0"	3:1	31"	37"	18 1/2"	15"	3 1/4"	1940	1'-4 5/8"
36"	4"	1'-3"	5'-3"	2'-10 3/4"	8'-1 3/4"	6'-0"	3:1	37"	47 11/16"	24 5/16"	20"	3 1/2"	4100	1'-8"
42"	4 1/2"	1'-9"	5'-3"	2'-11"	8'-2"	6'-6"	3:1	43"	53 7/8"	27 1/2"	22"	3 1/2"	5380	2'-2 1/2"
48"	5"	2'-0"	6'-0"	2'-2"	8'-2"	7'-0"	3:1	49"	56 1/2"	28 1/2"	22"	3 1/2"	6550	2'-6"
54"	5 1/2"	2'-4"	6'-6"	1'-10"	8'-4"	7'-6"	3:1	55"	65 1/2"	33 1/8"	24"	4"	8750	2'-10 1/2"
60"	6"	2'-10"	6'-6"	1'-10"	8'-4"	8'-0"	3:1	61"	72 1/2"	36 11/16"	24"	4"	9270	3'-5"
72"	7"	3'-10"	6'-6"	1'-10"	8'-4"	9'-0"	3:1	73"	77 11/16"	38 15/16"	24"	5"	13250	4'-6"

ARCH PIPE

EQUIV. DIA.	• SPAN AASHTO M 206	• SPAN AHD NOMINAL	• RISE AASHTO M 206	• RISE AHD NOMINAL	W	A	B	C	D	E	P	R2	G-T	S
INCHES														
15	18	18	11	11	2"	4"	2'-0"	4'-0"	6'-0"	3'-0"	29"	12"	1 1/2"	2 1/2:1
18	22	22	13 1/2	14	2 1/2"	5"	2'-0"	4'-1"	6'-1"	3'-6"	32 1/8"	13"	2 1/2"	2 1/2:1
21	26	26	15 1/2	16	2 3/4"	7"	2'-3"	3'-10"	6'-1"	4'-0"	34 1/8"	14"	2 1/2"	2 1/2:1
24	28 1/2	29	18	18	3"	9"	2'-3"	3'-10"	6'-1"	5'-0"	36 11/16"	15"	2 1/2"	2 1/2:1
30	36 1/4	36	22 1/2	23	3 1/2"	10"	3'-1"	3'-0 1/2"	6'-1 1/2"	6'-0"	47 11/16"	20"	3"	2 1/2:1
36	43 3/4	44	26 5/8	27	4"	10 1/2"	4'-0"	2'-11 1/2"	6'-1 1/2"	6'-6"	54 7/16"	22"	3 1/2"	2 1/2:1
42	51 1/8	51	31 5/16	31	4 1/2"	11 1/2"	4'-7"	1-10 1/4"	6'-5 1/4"	7'-2"	59 1/2"	23"	3 3/4"	2 1/2:1
48	58 1/2	59	36	36	5"	1'-3"	5'-3"	2'-10 3/4"	8'-1 3/4"	7'-10"	70 3/16"	24"	4 1/4"	2 1/2:1
54	65	65	40	40	5 1/2"	1'-7"	5'-3"	2'-11"	8'-2"	8'-6"	72 1/16"	24"	4 3/4"	2 1/4:1
60	73	73	45	45	6"	1'-10"	5'-6"	2'-8"	8'-2"	9'-0"	77 11/16"	24"	5"	2 1/4:1

• THE MEASURED SPAN AND RISE SHALL NOT VARY MORE THAN ± 2 PER CENT FROM THE VALUES SPECIFIED BY AASHTO M 206.

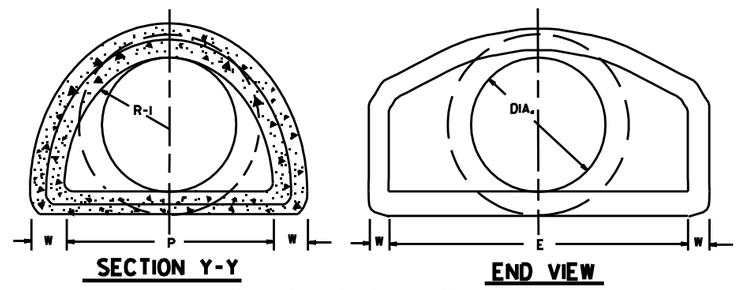

NOTE: TONGUE END ON UPSTREAM SECTION
GROOVE END ON DOWNSTREAM SECTION

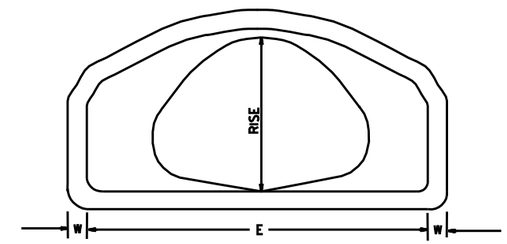

END VIEW
CONCRETE ARCH PIPE

END SECTION
FOR REINFORCED CONCRETE PIPE CULVERTS

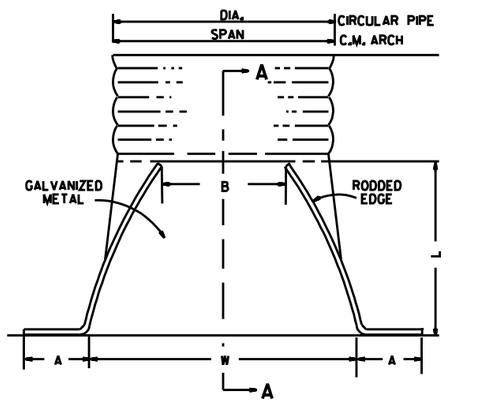

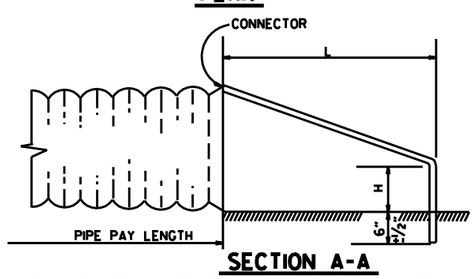

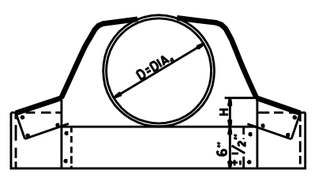

CIRCULAR PIPE

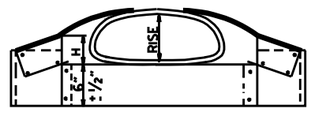

C.M. ARCH PIPE

CIRCULAR PIPE

D. DIA.	GAUGE	A 1" ±	B. MAX.	H 1" ±	L 1 1/2" ±	W 2" ±	S
		INCHES					
12	16	6	6	6	21	24	2 1/2:1
15	16	7	8	6	26	30	2 1/2:1
18	16	8	10	6	31	36	2 1/2:1
21	16	9	12	6	36	42	2 1/2:1
24	16	10	13	6	41	48	2 1/2:1
30	14	12	16	8	51	60	2 1/2:1
36	14	14	19	9	60	72	2 1/2:1
42	12	16	22	11	69	84	2 1/2:1
48	12	18	27	12	78	90	2 1/2:1
54	12	18	30	12	84	102	2:1
60	12	18	33	12	87	114	1 3/4:1
66	12	18	36	12	87	120	1 1/2:1
72	12	18	39	12	87	126	1 1/3:1

C.M. ARCH PIPE

EQUIV. DIA.	SPAN	RISE	A 1" ±	B MAX.	H 1" ±	L 1 1/2" ±	W 2" ±	S	GAUGE
			INCHES						
15"	17	13	7	9	6	19	30	2 1/2:1	16
18"	21	15	7	10	6	23	36	2 1/2:1	16
21"	24	18	8	12	6	28	42	2 1/2:1	16
24"	28	20	9	14	6	32	48	2 1/2:1	16
30"	35	24	10	16	6	39	60	2 1/2:1	14
36"	42	29	12	18	8	46	75	2 1/2:1	14
42"	49	33	13	21	9	53	85	2 1/2:1	12
48"	57	38	18	26	12	63	90	2 1/2:1	12
54"	64	43	18	30	12	70	102	2 1/4:1	12
60"	71	47	18	33	12	77	114	2 1/4:1	12

NOTE: ALTERNATE CONNECTIONS TO THE PIPE CULVERTS, IN ACCORDANCE WITH MANUFACTURER'S STANDARD PRACTICES, MAY BE MADE SUBJECT TO THE APPROVAL OF THE ENGINEER.

END SECTIONS FOR CORRUGATED METAL PIPE CULVERTS

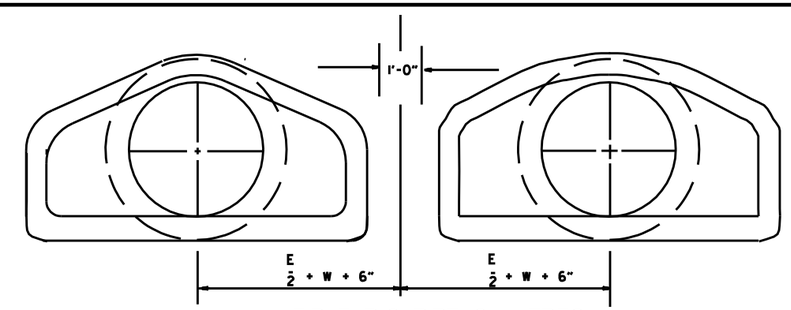

MULTIPLE R.C. PIPE CULVERTS

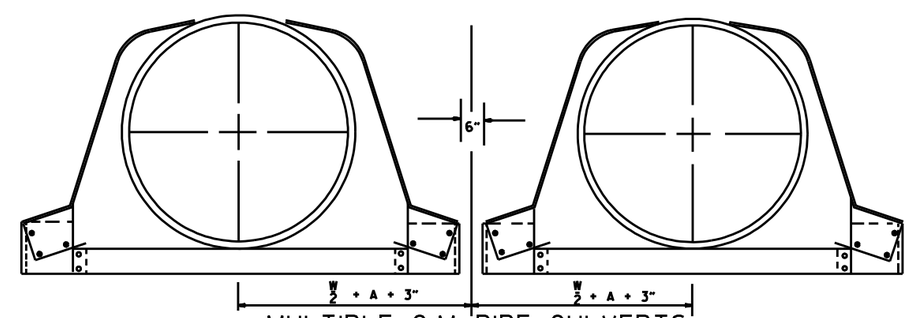

MULTIPLE C.M. PIPE CULVERTS

DATE	REVISION	FILMED
10-18-96	REVISED ASTM REF. TO AASHTO	
5-15-80	REVISED DISTANCE BETWEEN MULTIPLE R.C.P. F.E.S.	664-5-15-80
7-14-78	C.M. ARCH SIZES TO CONFORM WITH AASHTO SIZES	752-7-14-78
8-22-75	ADDED MULTIPLE PIPE CULVERTS	517-8-22-75
12-5-74	REMOVED NOTE RE REINF. FOR R.C. F.E.S.	500-12-5-74
5-24-73	CMP END SECTION, SHOW PIPE PAY LENGTH	627-5-24-73
10-2-72	REVISED AND REDRAWN	760-10-2-72

ARKANSAS STATE HIGHWAY COMMISSION

FLARED END SECTION

STANDARD DRAWING FES-2

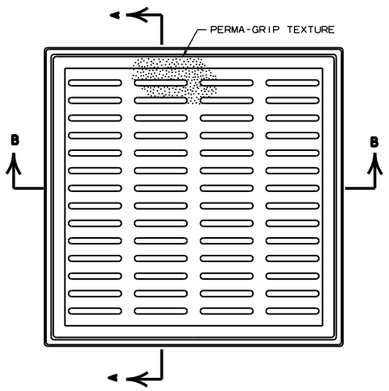

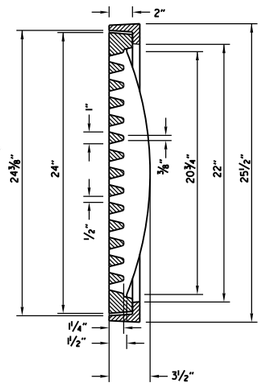

SECTION A-A

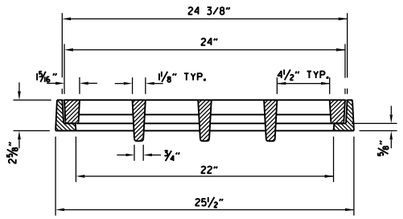

SECTION B-B

GENERAL NOTES (PEDESTRIAN GRATE & FRAME)

1. THE PEDESTRIAN GRATE SHALL BE ORIENTED IN THE TOP OF THE DROP INLET SO THAT THE ½" OPENINGS ARE PERPENDICULAR TO THE PATH OF PEDESTRIAN TRAVEL.
2. THE PEDESTRIAN GRATE AND FRAME SHALL BE CONSTRUCTED OF CAST IRON AND SHALL CONFORM TO THE REQUIREMENTS OF THE STANDARD SPECIFICATIONS FOR GRAY IRON CASTINGS AASHTO M 105, CLASS 35B, & AASHTO M 306.
3. THE GRATE AND FRAME SHALL NOT BE PAINTED.
4. THE GRATE AND FRAME SHALL BE INSTALLED IN THE DROP INLET IN THE ASSEMBLED POSITION.
5. THE APPROXIMATE WEIGHT OF THE GRATE AND FRAME SHALL BE 218 LBS.
6. THE MINIMUM WATERWAY OPENING SHALL BE 122 SQ. IN.

DETAILS OF PEDESTRIAN GRATE AND FRAME

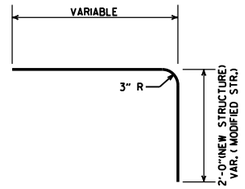

DETAIL OF BENT "b" BAR

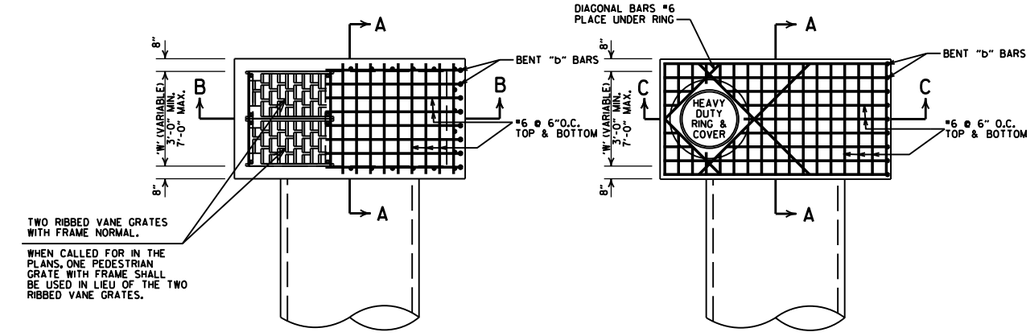

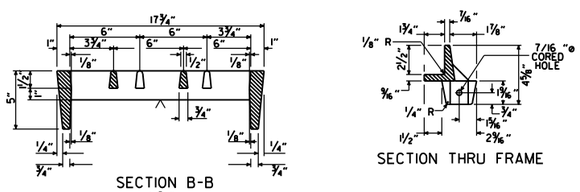

SECTION B-B

SECTION THRU FRAME

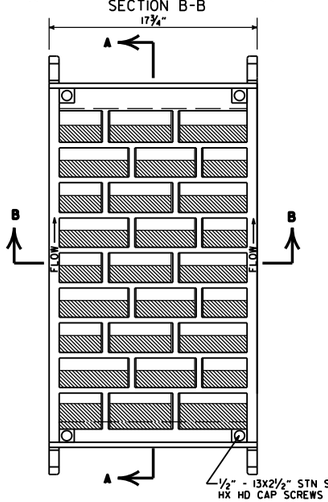

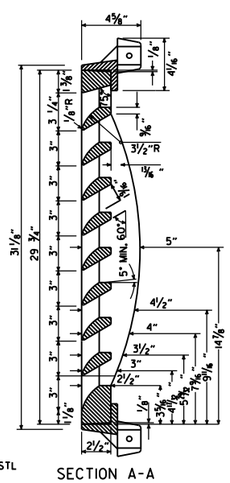

SECTION A-A

DETAILS OF RIBBED VANE GRATE AND FRAME

GENERAL NOTES (RIBBED VANE GRATE & FRAME)

1. RIBBED VANE GRATE AND FRAME SHALL BE CONSTRUCTED OF CAST IRON AND SHALL CONFORM TO THE REQUIREMENTS OF THE STANDARD SPECIFICATIONS FOR GRAY IRON CASTINGS AASHTO M 105, CLASS 35B, & AASHTO M 306.
2. GRATE AND FRAME SHALL NOT BE PAINTED.
3. GRATE AND FRAME SHALL BE INSTALLED IN DROP INLET IN ASSEMBLED POSITION.
4. APPROXIMATE WEIGHT OF GRATE SHALL BE 170 LBS.

SECTION 'A'
'V' = 8"

SECTION 'B' (W≤4'-0")
'V' = 8"

SECTION 'B' (W>4'-0")
'V' = 10"

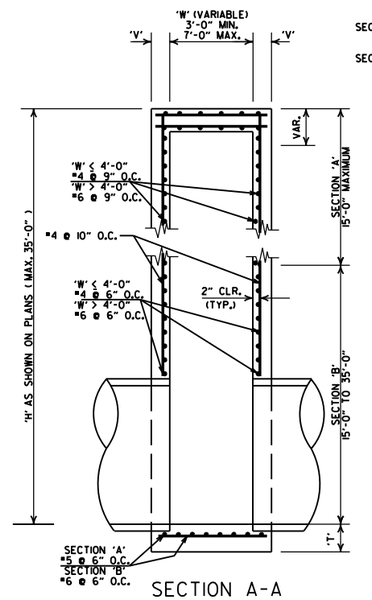

SECTION A-A

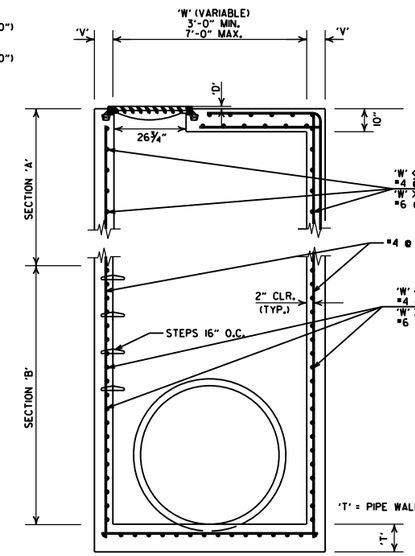

SECTION B-B

SECTION C-C

DETAILS OF JUNCTION BOX (TYPE ST)

GENERAL NOTES (TYPE ST DROP INLET & JUNCTION BOX)

1. THE 'D' DIMENSION SHALL MATCH THE FINAL LIFT OF ACHM SURFACE COURSE SHOWN IN THE PLANS WHEN ASPHALT PAVING SURROUNDS THE GRATE OR RING COVER, AND SHALL BE 0" AT OTHER INSTALLATIONS.
2. THE STEPS SHALL BE OMITTED WHERE 'H' IS LESS THAN 4'-0".
3. ALL EXPOSED CORNERS ARE TO HAVE A ¾" CHAMFER.

DETAILS OF DROP INLET (TYPE ST)

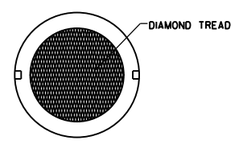

COVER FACE

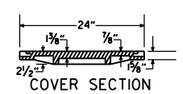

COVER SECTION

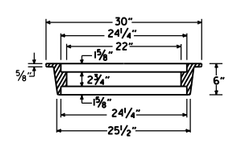

RING SECTION

HEAVY DUTY RING & COVER

APPROXIMATE TOTAL WEIGHT = 333 LBS.

GENERAL NOTES (HEAVY DUTY RING & COVER):

1. HEAVY DUTY RING AND COVER SHALL BE CONSTRUCTED OF CAST IRON AND SHALL CONFORM TO THE REQUIREMENTS OF THE STANDARD SPECIFICATIONS FOR GRAY IRON CASTINGS AASHTO M 105, CLASS 35B, & AASHTO M 306.
2. HEAVY DUTY RING AND COVER SHALL NOT BE PAINTED.
3. HEAVY DUTY RING SHALL ALWAYS BE INSTALLED WITH FLANGE ON TOP.
4. DIMENSIONS SHOWN FOR RING AND COVER ARE TYPICAL. THE CONTRACTOR MAY SUBSTITUTE SIMILAR CASTINGS WITH THE APPROVAL OF THE ENGINEER, REQUESTING APPROVAL FOR CASTING DESIGNS MAY BE MADE BY REFERRING TO PREVIOUSLY APPROVED DRAWINGS.

DATE REVISED	DATE FILMED	DESCRIPTION
7-26-12		REMOVED NOTE 4, REVISED 'T', REVISED BOTTOM SLAB REBAR FOR SECTION 'A', SHOWED REBAR CLEARANCE IN SECTIONS
11-16-01		ADDED NOTE 4
1-12-00		REVISED HEAVY DUTY RING & COVER
5-13-99		ADDED PEDESTRIAN FRAME & GRATE
7-02-98		REMOVED NOTE 5, REV. DIMENSIONS, ADDED HEAVY DUTY RING & COVER ADDED AASHTO REF. REVISED GRATE
10-18-96		REVISED ASTM REF. TO AASHTO
10-1-92		REVISED & REISSUED
8-15-91	8-15-91	REVISED & REISSUED

ARKANSAS STATE HIGHWAY COMMISSION

DETAILS OF DROP INLET & JUNCTION BOX (TYPE ST)

STANDARD DRAWING FPC-9S

REINFORCED CONCRETE ARCH PIPE DIMENSIONS

EQUIV. DIA.	SPAN		RISE	
	AASHTO M 206	ARDOT NOMINAL	AASHTO M 206	ARDOT NOMINAL
INCHES	INCHES			
15	18	18	11	11
18	22	22	13½	14
21	26	26	15½	16
24	28½	29	18	18
30	36¼	36	22½	23
36	43⅜	44	26⅝	27
42	51⅛	51	31⅝	31
48	58½	59	36	36
54	65	65	40	40
60	73	73	45	45
72	88	88	54	54
84	102	102	62	62
90	115	115	72	72
96	122	122	77½	77
108	138	138	87⅛	87
120	154	154	96⅞	97
132	168¾	169	106½	107

THE MEASURED SPAN AND RISE SHALL NOT VARY MORE THAN ± 2 PERCENT FROM THE VALUES SPECIFIED BY AASHTO M206.

REINFORCED CONCRETE HORIZONTAL ELLIPTICAL PIPE DIMENSIONS

EQUIV. DIA.	AASHTO M 207	
	SPAN	RISE
INCHES	INCHES	
18	23	14
24	30	19
27	34	22
30	38	24
33	42	27
36	45	29
39	49	32
42	53	34
48	60	38
54	68	43
60	76	48
66	83	53
72	91	58
78	98	63
84	106	68

THE MEASURED SPAN AND RISE SHALL NOT VARY MORE THAN ± 2 PERCENT FROM THE VALUES SPECIFIED BY AASHTO M207.

CONSTRUCTION SEQUENCE

1. PLACE STRUCTURAL BEDDING MATERIAL TO GRADE. DO NOT COMPACT.
2. INSTALL PIPE TO GRADE.
3. COMPACT STRUCTURAL BEDDING OUTSIDE THE MIDDLE THIRD OF THE PIPE.
4. PLACE AND COMPACT THE HAUNCH AREA UP TO THE MIDDLE OF THE PIPE.
5. COMPLETE BACKFILL ACCORDING TO SUBSECTION 606.03.(f)(1).

NOTE: HAUNCH AND STRUCTURAL BEDDING MATERIAL WILL NOT BE PAID FOR SEPARATELY, BUT COMPENSATION WILL BE CONSIDERED TO BE INCLUDED IN THE PRICE BID PER LINEAR FOOT OF CONCRETE PIPE.

- LEGEND -

D_1 = NORMAL INSIDE DIAMETER OF PIPE
D_O = OUTSIDE DIAMETER OF PIPE
H = FILL COVER HEIGHT OVER PIPE (FEET)
MIN. = MINIMUM
= UNDISTURBED SOIL

INSTALLATION TYPE	MATERIAL REQUIREMENTS FOR HAUNCH AND STRUCTURAL BEDDING
TYPE 1	AGGREGATE BASE COURSE (CLASS 5 OR CLASS 7)
TYPE 2	SELECTED MATERIALS (CLASS SM-1, SM-2, OR SM-4) OR TYPE 1 INSTALLATION MATERIAL*
TYPE 3**	AASHTO CLASSIFICATION A-1 THRU A-6 SOIL OR TYPE 1 OR 2 INSTALLATION MATERIAL

* SM-3 WILL NOT BE ALLOWED.

** MATERIALS SHALL NOT INCLUDE ORGANIC MATERIALS OR STONES LARGER THAN 3 INCHES.

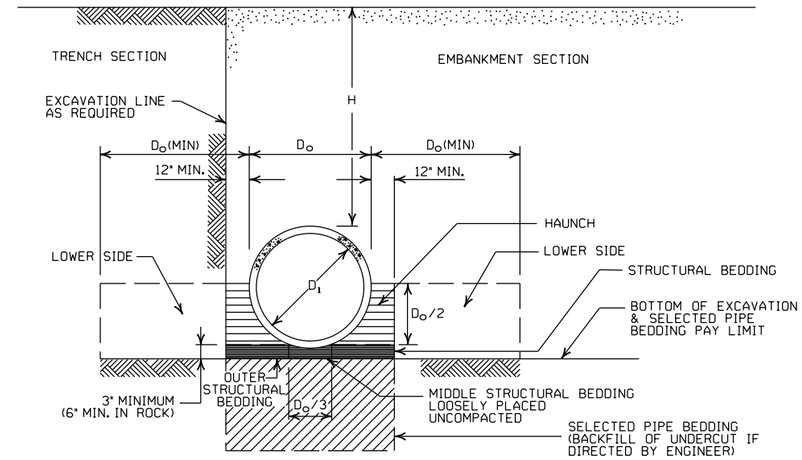

EMBANKMENT AND TRENCH INSTALLATIONS

1. MATERIAL IN THE HAUNCH AND OUTER STRUCTURAL BEDDING SHALL BE COMPACTED TO 95% OF THE MAXIMUM DENSITY ACCORDING TO THE TYPE OR CLASS OF MATERIAL USED.
2. FOR TRENCHES WITH WALLS OF NATURAL SOIL, THE DENSITY OF THE SOIL IN THE LOWER SIDE ZONE SHALL BE AS FIRM AS THE 95% DENSITY REQUIRED FOR THE HAUNCH. IF THE EXISTING SOIL DOES NOT MEET THIS CRITERIA, IT SHALL BE REMOVED AND RECOMPACTED TO 95% OF THE MAXIMUM DENSITY ACCORDING TO THE TYPE OF MATERIAL USED.
3. FOR EMBANKMENTS, THE MATERIAL IN THE LOWER SIDE ZONE SHALL BE COMPACTED TO 95% OF THE MAXIMUM DENSITY ACCORDING TO THE TYPE OR CLASS OF MATERIAL USED.

MINIMUM HEIGHT OF FILL "H" OVER CIRCULAR R.C. PIPE CULVERTS

	CLASS OF PIPE			
	CLASS III		CLASS IV	CLASS V
INSTALLATION TYPE	TYPE 1 OR 2	TYPE 3	ALL	ALL
PIPE ID (IN.)	FEET			
12-15	2	2.5	2	1
18-24	2.5	3	2	1
27-33	3	4	2	1
36-42	3.5	5	2	1
48	4.5	5.5	2	1
54-60	5	7	2	1
66-78	6	8	2	1
84-108	7.5	8	2	1

NOTE: FOR MINIMUM COVER VALUES, "H" SHALL INCLUDE A MINIMUM OF 12" OF PAVEMENT AND/OR BASE.

MAXIMUM HEIGHT OF FILL "H" OVER CIRCULAR R.C. PIPE CULVERTS

INSTALLATION TYPE	CLASS OF PIPE		
	CLASS III	CLASS IV	CLASS V
	FEET		
TYPE 1	21	32	50
TYPE 2	16	25	39
TYPE 3	12	20	30

NOTE: IF FILL HEIGHT EXCEEDS 50 FEET, A SPECIAL DESIGN CONCRETE PIPE WILL BE REQUIRED USING TYPE 1 INSTALLATION.

MINIMUM HEIGHT OF FILL "H" OVER R.C. ARCH & HORIZONTAL ELLIPTICAL PIPE CULVERTS

INSTALLATION TYPE	CLASS OF PIPE	
	CLASS III	CLASS IV
	FEET	
TYPE 2 OR TYPE 3	2.5	1.5

NOTE: TYPE 1 INSTALLATION WILL NOT BE ALLOWED FOR ARCH & HORIZONTAL ELLIPTICAL PIPE CULVERTS.

NOTE: FOR MINIMUM COVER VALUES, "H" SHALL INCLUDE A MINIMUM OF 12" OF PAVEMENT AND/OR BASE.

MAXIMUM HEIGHT OF FILL "H" OVER R.C. ARCH & HORIZONTAL ELLIPTICAL PIPE CULVERTS

INSTALLATION TYPE	CLASS OF PIPE	
	CLASS III	CLASS IV
	FEET	
TYPE 2	13	21
TYPE 3	10	16

NOTE: TYPE 1 INSTALLATION WILL NOT BE ALLOWED FOR ARCH & HORIZONTAL ELLIPTICAL PIPE CULVERTS.

GENERAL NOTES

1. CONCRETE PIPE CULVERT CONSTRUCTION SHALL CONFORM TO ARKANSAS DEPARTMENT OF TRANSPORTATION STANDARD SPECIFICATIONS FOR HIGHWAY CONSTRUCTION (CURRENT EDITION), WITH APPLICABLE SUPPLEMENTAL SPECIFICATIONS AND SPECIAL PROVISIONS. UNLESS OTHERWISE NOTED IN THE PLANS, SECTION AND SUBSECTION REFER TO THE STANDARD CONSTRUCTION SPECIFICATIONS.
2. CONCRETE PIPE CULVERT DESIGN SHALL CONFORM TO AASHTO LRFD BRIDGE DESIGN SPECIFICATIONS, FIFTH EDITION (2010) WITH 2010 INTERIMS.
3. ALL PIPE SHALL CONFORM TO SECTION 606. CIRCULAR R.C. PIPE CULVERTS SHALL CONFORM TO AASHTO M170. R.C. ARCH PIPE CULVERTS SHALL CONFORM TO AASHTO M206 AND HORIZONTAL ELLIPTICAL PIPE CULVERTS SHALL CONFORM TO AASHTO M207.
4. ALL PIPE SHALL BE PROTECTED DURING CONSTRUCTION BY A COVER SUFFICIENT TO PREVENT DAMAGE FROM PASSAGE OF EQUIPMENT.
5. THE MINIMUM TRENCH WIDTH SHALL BE THE OUTSIDE DIAMETER OF THE PIPE PLUS 24 INCHES. THE MAXIMUM ALLOWABLE TRENCH WIDTH SHALL BE THE MINIMUM WIDTH PRACTICABLE FOR WORKING CONDITIONS.
6. MULTIPLE PIPE CULVERTS SHALL BE INSTALLED WITH A MINIMUM CLEARANCE OF 24 INCHES BETWEEN STRINGS OF PIPE. REFER TO STD. DWG. FES-2 FOR MINIMUM CLEARANCE WHERE FLARED END SECTIONS ARE USED.
7. IMPERVIOUS MATERIAL SHOULD BE PLACED AS DIRECTED BY THE ENGINEER AT THE ENDS OF THE CULVERT TO PREVENT LOSS OF STRUCTURAL BEDDING WHEN PERVIOUS MATERIAL IS USED FOR STRUCTURAL BEDDING AND/OR BACKFILL.
8. NOT MORE THAN ONE LIFTING HOLE MAY BE PROVIDED IN CONCRETE PIPE TO FACILITATE HANDLING. HOLE MAY BE CAST IN PLACE, CUT INTO THE FRESH CONCRETE AFTER FORMS ARE REMOVED, OR DRILLED. THE HOLE SHALL NOT BE MORE THAN TWO INCHES IN DIAMETER OR TWO INCHES SQUARE. CUTTING OR DISPLACEMENT OF REINFORCEMENT WILL NOT BE PERMITTED. SPALLED AREAS AROUND THE HOLE SHALL BE REPAIRED IN A WORKMANLIKE MANNER. LIFTING HOLE SHALL BE FILLED WITH MORTAR, CONCRETE, OR OTHER METHOD AS APPROVED BY THE ENGINEER.
9. WHEN DIRECTED BY THE ENGINEER, UNSUITABLE MATERIAL THAT IS ENCOUNTERED AT THE BOTTOM OF THE EXCAVATED TRENCH (BELOW THE AREA IDENTIFIED AS "STRUCTURAL BEDDING" ABOVE) WILL BE EXCAVATED AND REPLACED WITH SELECTED PIPE BEDDING. THE QUANTITY OF MATERIAL REQUIRED TO BACKFILL THE UNDERCUT AREA UP TO THE SELECTED PIPE BEDDING PAY LIMIT DESIGNATED ABOVE WILL BE MEASURED AND PAID FOR AS "SELECTED PIPE BEDDING."
10. WHEN THE EXISTING MATERIAL EXCAVATED FOR THE PIPE TRENCH IS DETERMINED BY THE ENGINEER TO BE UNSUITABLE FOR BACKFILLING THE PIPE (ABOVE THE AREA IDENTIFIED ABOVE AS THE HAUNCH), BORROW MATERIAL OR MATERIAL FROM THE ROADWAY EXCAVATION WILL BE USED TO BACKFILL THE PIPE. IF SUITABLE MATERIAL IS NOT AVAILABLE, THE ENGINEER MAY AUTHORIZE THE USE OF "SELECTED PIPE BACKFILL."

DATE	REVISION	DATE FILMED
2-27-14	REVISED GENERAL NOTE 1.	
12-15-11	REVISED FOR LRFD DESIGN SPECIFICATIONS	
5-18-00	REVISED TYPE 3 BEDDING & ADDED NOTE	
3-30-00	REVISED INSTALLATIONS	
11-06-97	ISSUED	

ARKANSAS STATE HIGHWAY COMMISSION

CONCRETE PIPE CULVERT FILL HEIGHTS & BEDDING

STANDARD DRAWING PCC-1

NOTES:

1. REFER TO THE STRIPING DETAILS FOR PAVEMENT MARKING LINE WIDTHS.
2. THIS DRAWING SHALL BE USED IN CONJUNCTION WITH THE LATEST REVISED ADDITION OF THE "MANUAL ON UNIFORM TRAFFIC CONTROL DEVICES."
3. RAISED PAVEMENT MARKERS SHALL BE PLACED ON AN 80 FEET SPACING UNLESS OTHERWISE SHOWN IN THE PLANS.

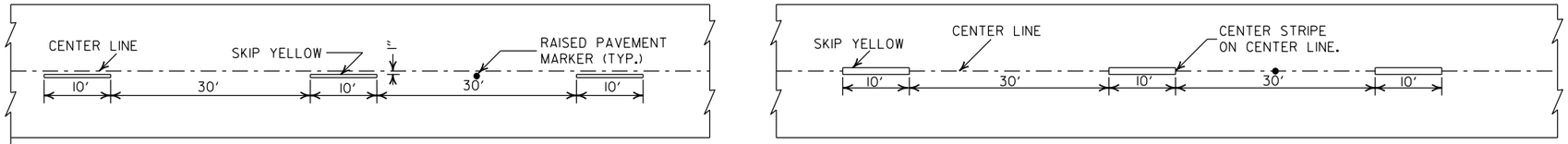

CONCRETE PAVEMENT

ASPHALT PAVEMENT

BROKEN LINE STRIPING

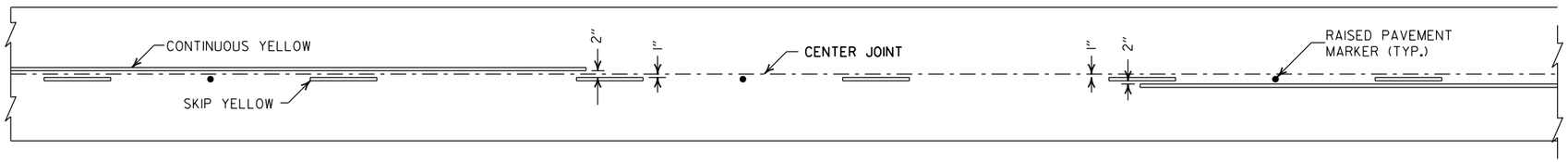

SOLID LINE STRIPING ON CONCRETE PAVEMENT

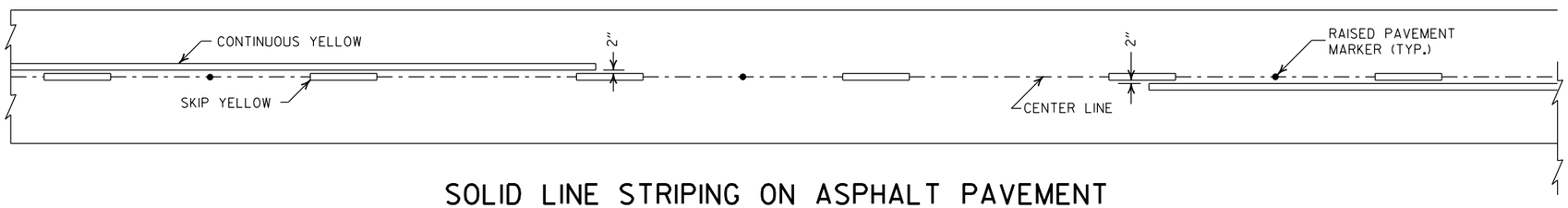

SOLID LINE STRIPING ON ASPHALT PAVEMENT

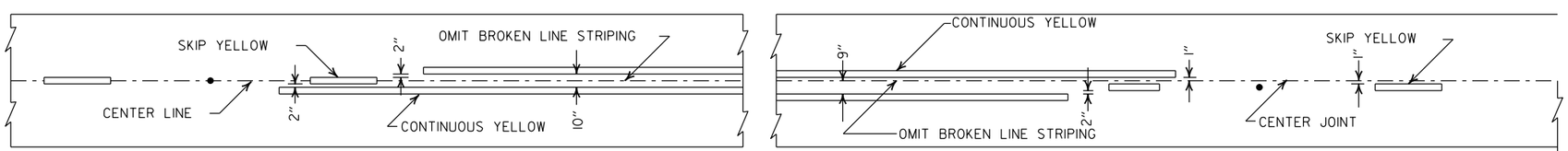

ASPHALT PAVEMENT

CONCRETE PAVEMENT

STRIPING AT ADJACENT NO PASSING LANES

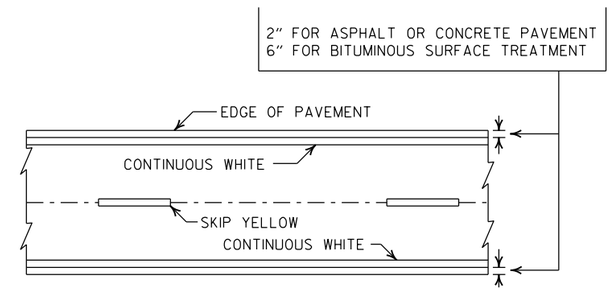

PAVEMENT EDGE LINE MARKING

NOTE:
THE RED LENS OF THE TYPE II R.P.M. SHALL FACE THE INCORRECT TRAFFIC MOVEMENT.

NOTE:
DIMENSIONS SHOWN FOR RAISED PAVEMENT MARKERS ARE TYPICAL. THE CONTRACTOR MAY SUBSTITUTE SIMILAR MARKERS WITH THE APPROVAL OF THE ENGINEER. REQUESTING APPROVAL FOR SIMILAR MARKERS MAY BE MADE BY REFERRING TO THE ARDOT QUALIFIED PRODUCTS LIST.

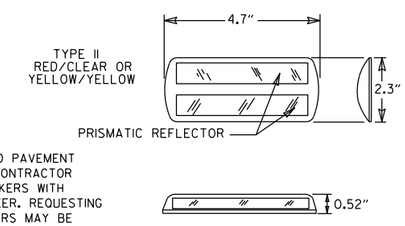

DETAIL OF STANDARD RAISED PAVEMENT MARKERS

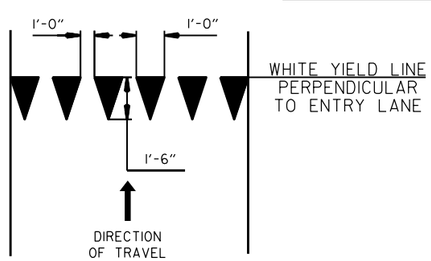

YIELD LINE DETAIL

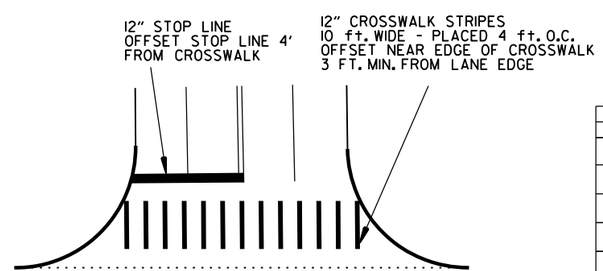

CROSSWALK AND STOP LINE DETAILS

DATE	REVISION	FILMED
2-27-20	REVISED STOP LINE DETAILS	
6-1-17	ADDED YIELD LINE DETAIL	
5-12-16	REVISED LINE WIDTHS, SPACING, & NOTES	
9-12-13	REVISED DETAIL OF STANDARD RAISED PAVEMENT MARKERS	
11-17-10	REVISED GENERAL NOTES & REMOVED PLOWABLE PVMT MRKRS	
11-18-04	REVISED NOTE 2 & GENERAL NOTES	
8-22-02	ADDED CROSSWALK & STOPBAR DTLS.	
7-02-98	ADDED DETAILS OF STD. RAISED PAV'T. MARKERS	
4-26-96	REV. NOTES 3&4; ADDED R.P.M.	
9-30-80	DRAWN	1-9-30-80

ARKANSAS STATE HIGHWAY COMMISSION

PAVEMENT MARKING DETAILS

STANDARD DRAWING PM-1

CONDUIT ENTRY TO EXISTING POLE BASE

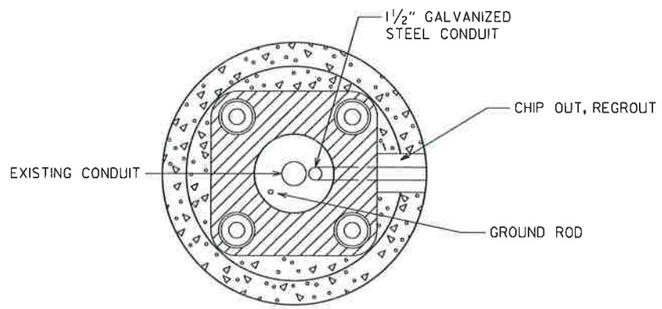

ANCHOR BASE

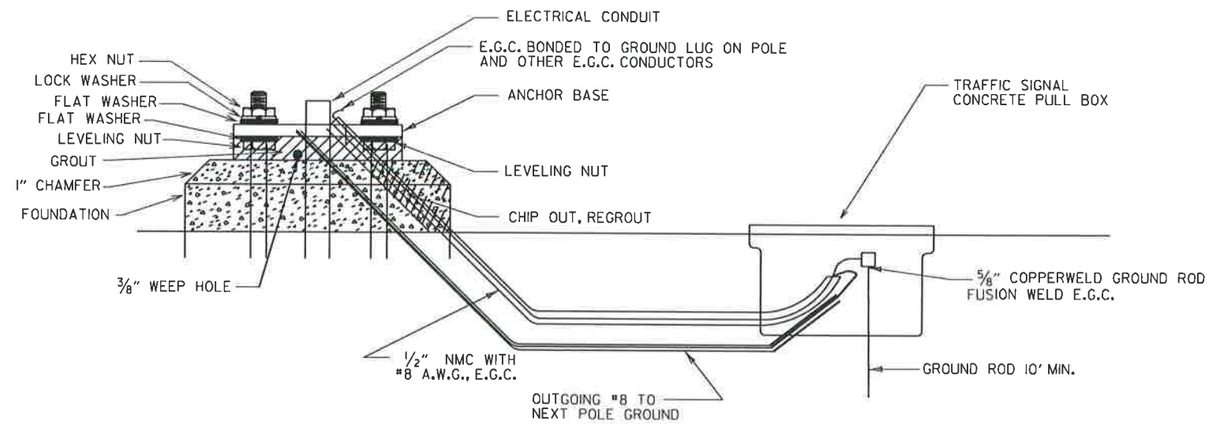

CONDUIT ENTRY TO EXISTING CONTROLLER CABINET

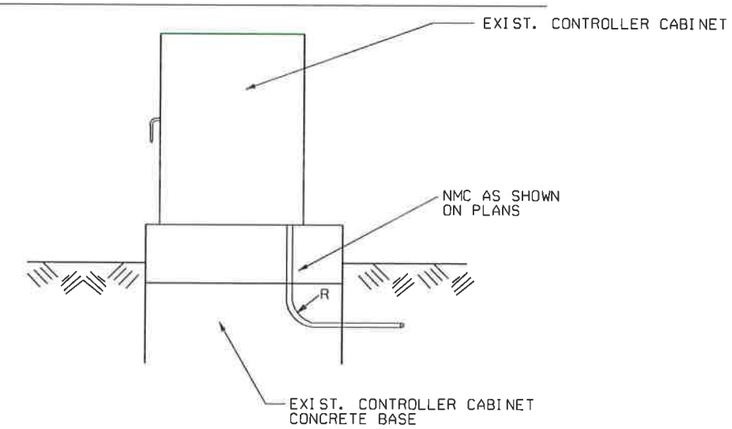

NOTE: ENTRY TO CABINET SHALL BE THROUGH A CUT IN THE BASE SUFFICIENT TO PROVIDE ADEQUATE CONDUIT RADIUS FOR ITEM.

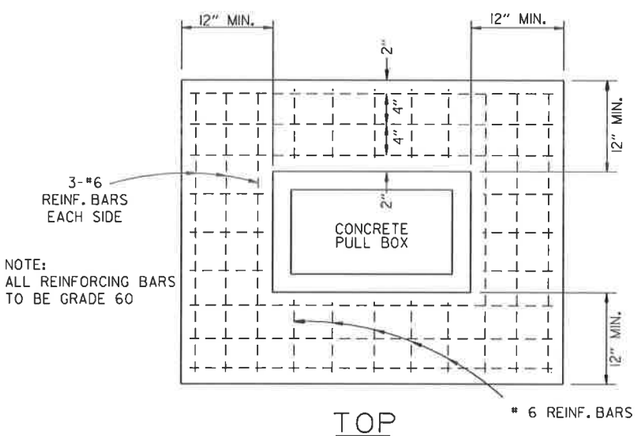

TOP

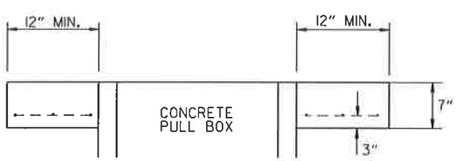

ELEVATION

TYPE "HD" CONCRETE PULL BOX DETAIL

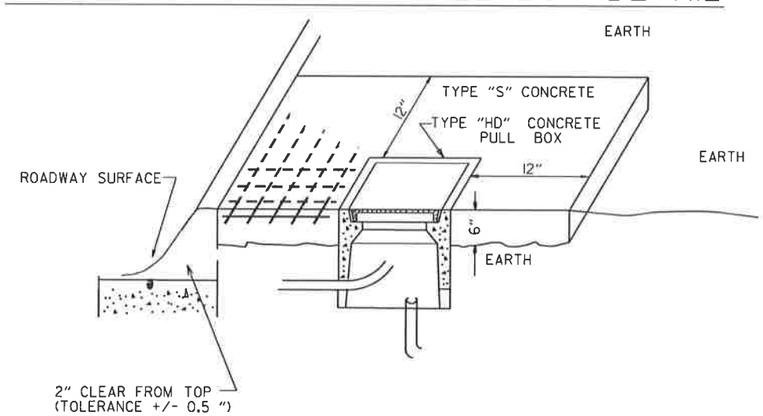

NOTE:
ALL TYPE 1 AND TYPE 2 HD CONCRETE PULL BOXES ARE INSTALLED WITH AN APRON OF CONCRETE 12" WIDE AND 7" IN DEPTH. ALL PAYMENT SHALL BE INCLUDED IN THE PRICE OF THE TYPE HD CONCRETE PULL BOX. THE CONCRETE PULL BOX SHALL BE INSTALLED FLUSH TO SURROUNDING GRADE UNLESS OTHERWISE INSTRUCTED BY THE ENGINEER. THE CONCRETE SHALL BE CLASS "S". THREE #6 REINFORCING BARS IN THE APRON ON ALL SIDES OF THE CONCRETE PULL BOX IS REQUIRED IN CONCRETE.

DATE	REVISION	FILMED
11-16-17	REVISED NOTES	
09-02-15	REVISED PULL BOX DEPTH	
09-12-13	ISSUED AS STANDARD DRAWING	
05-21-09	REVISED GROUNDING	
07-31-08	ADDED & REVISED CONDUIT ENTRY	
06-23-04	REVISED CLEARANCE AT CURB ENTRY	
01-04-02	ADDED REINFORCING TO BOX APRON	
07-02-01	REVISED	
12-27-99	REVISED NOTES	
11-18-98	ISSUED	

ARKANSAS STATE HIGHWAY COMMISSION

HEAVY DUTY PULL BOX

STANDARD DRAWING SD-6

MAIN BREAKER NOT NEAR CONTROLLER CABINET SECONDARY REQUIRED

GROUND ROD - A 10' X 5/8" GROUND ROD SHALL BE INSTALLED IN THE CONCRETE PULL BOX FOR EACH POLE AND THE CONTROLLER. PAYMENT FOR THE GROUND ROD AND 1/2" NMC SHALL BE INCLUDED IN ITEM 701. THE CONCRETE PULL BOX AND CONDUCTOR BOX SHALL BE PAID FOR SEPARATELY.

WITH POWER ISOLATION ASSEMBLY

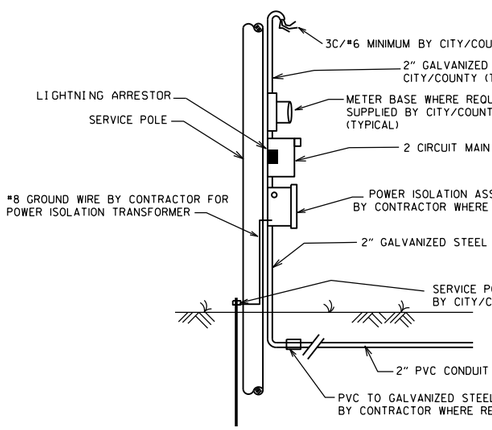

WITHOUT POWER ISOLATION ASSEMBLY

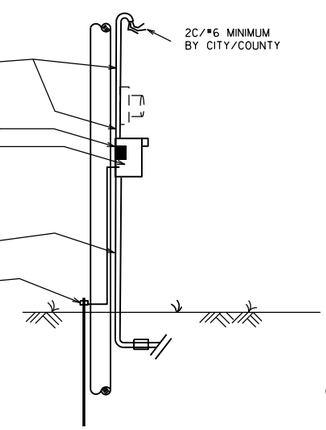

SECONDARY BREAKER BY CONTRACTOR (SUBSIDIARY)

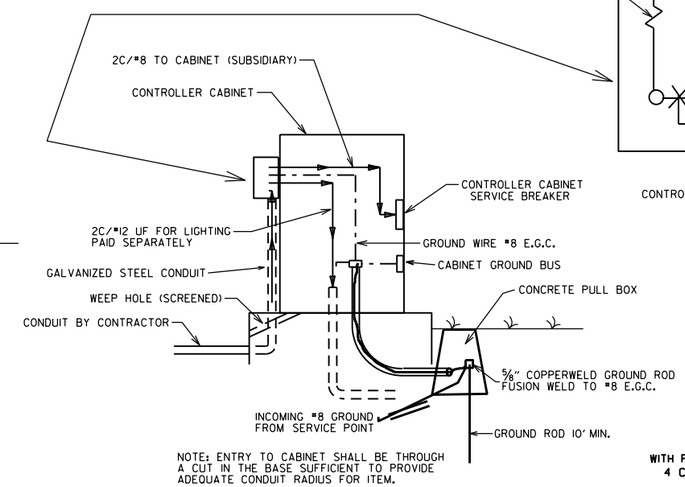

NOTE: ENTRY TO CABINET SHALL BE THROUGH A CUT IN THE BASE SUFFICIENT TO PROVIDE ADEQUATE CONDUIT RADIUS FOR ITEM.

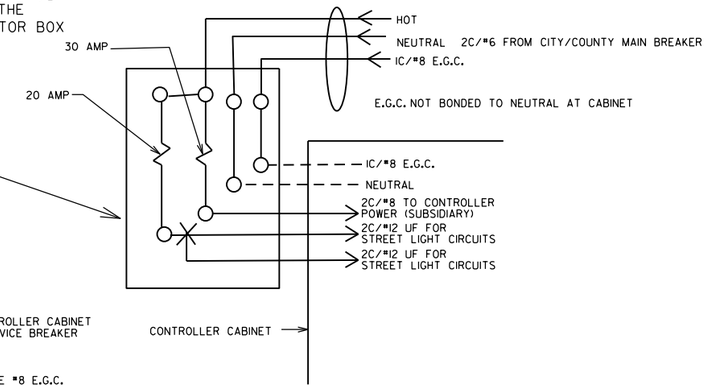

MAIN BREAKER WIRING (TYPICAL)

SERVICE GROUND IS TYPICALLY TIED TO NEUTRAL AT THE MAIN BREAKER. AS SUCH, CONTROLLER GROUND IS NOT TIED TO NEUTRAL AT SECONDARY BREAKER OR IN CONTROLLER CABINET.

NOTES TO CONTRACTOR AND AGENCY RESPONSIBLE FOR MAINTENANCE OF THE INTERSECTION (CITY/COUNTY):

ELECTRICAL SERVICE TYPICALLY FALLS INTO TWO CATEGORIES:
MAIN BREAKER NEAR CONTROLLER CABINET; AND MAIN BREAKER NOT NEAR CONTROLLER CABINET. THE CONTRACTOR'S AND THE CITY'S/COUNTY'S RESPONSIBILITY VARIES ACCORDINGLY AS INDICATED ON THESE DETAILS.

ALL SITUATIONS:
ELECTRICAL SERVICE SHALL BE PROVIDED BY THE CITY/COUNTY TO A SERVICE POLE WITH EXTERNAL RAINTIGHT BREAKER (MAIN BREAKER) AT A MUTUALLY ACCEPTABLE POINT WITHIN THE RIGHT-OF-WAY. SERVICE POINT INCLUDES GALVANIZED STEEL CONDUIT TO A POINT 18" BELOW GROUND LINE, TWO CIRCUIT MAIN BREAKER, LIGHTNING ARRESTOR, POWER ISOLATION ASSEMBLY WHERE REQUIRED, METER LOOP IF REQUIRED BY LOCAL UTILITY COMPANY, ELECTRICAL CONDUCTORS AND WEATHERHEAD. WHERE STREET LIGHTING IS INCLUDED AS PART OF SIGNAL INSTALLATION STREET LIGHTING CIRCUIT (2C/#12 A.W.G. UF RATED, TYPICAL) SHALL BE KEPT SEPARATE FROM THE CIRCUIT SERVING TRAFFIC SIGNAL. SERVICE WIRE AND WIRING FROM THE CONTROLLER TO MAIN BREAKER IS PROVIDED BY THE CONTRACTOR AS A PART OF THIS CONTRACT. WIRE AND WIRING FROM MAIN BREAKER, AND CONNECTION TO THE UTILITY IS THE RESPONSIBILITY OF THE CITY/COUNTY.

MAIN BREAKER NOT NEAR CONTROLLER CABINET:
THE MAIN BREAKER ASSEMBLY, GALVANIZED STEEL CONDUIT. WEATHERHEAD AND WIRE ABOVE MAIN BREAKER AND CONNECTION TO THE UTILITY SHALL BE PROVIDED BY CITY/COUNTY. CONTRACTOR SHALL PROVIDE AS PART OF CONTRACT SECONDARY BREAKER, CONDUIT, WIRE AND WIRING TO THE MAIN BREAKER.

MAIN BREAKER NEAR CONTROLLER CABINET:
ALL COMPONENTS OF THE SERVICE POINT WITH THE EXCEPTION OF THE WIRE AND WIRING ABOVE THE MAIN BREAKER IS FURNISHED AND INSTALLED BY THE CONTRACTOR. WIRING FROM MAIN BREAKER INCLUDING CONNECTION TO THE UTILITY, IS THE RESPONSIBILITY OF THE CITY/COUNTY. IF METER LOOP IS REQUIRED, METER BASE AND HARDWARE IS PROVIDED BY THE CITY/COUNTY AND INSTALLED BY THE CONTRACTOR.

WITH POWER ISOLATION ASSEMBLY
4 CIRCUIT MAIN BREAKER

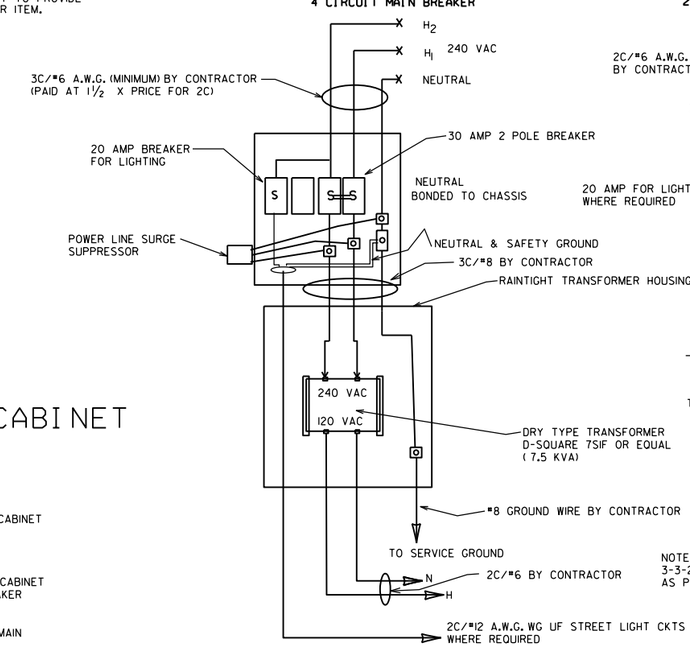

WITHOUT POWER ISOLATION ASSEMBLY
2 CIRCUIT MAIN BREAKER

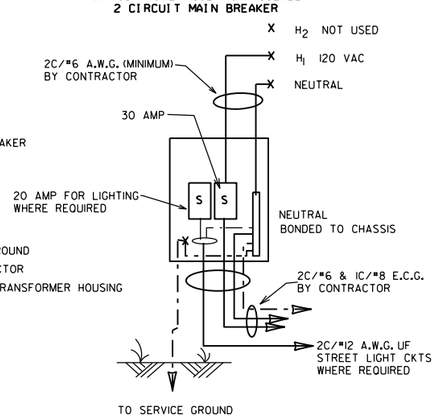

NOTE: ELECTRICAL GROUND CONDUCTOR (E.C.G.) ADDED 3-3-2003, CONSISTING OF A IC/#8 A.W.G. CU GREEN WIRE AS PER NATIONAL ELECT. CODES.

MAIN BREAKER NEAR CONTROLLER CABINET SECONDARY NOT REQUIRED

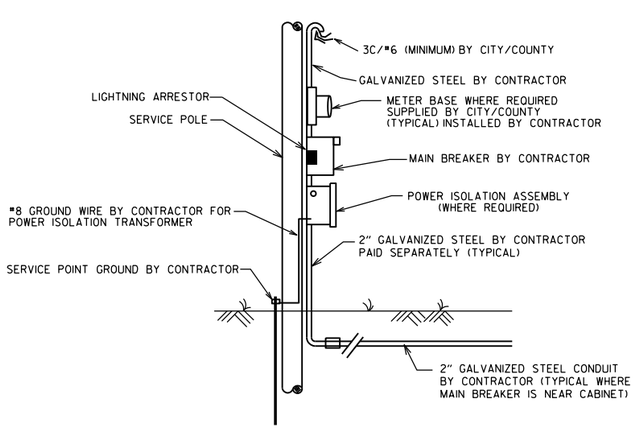

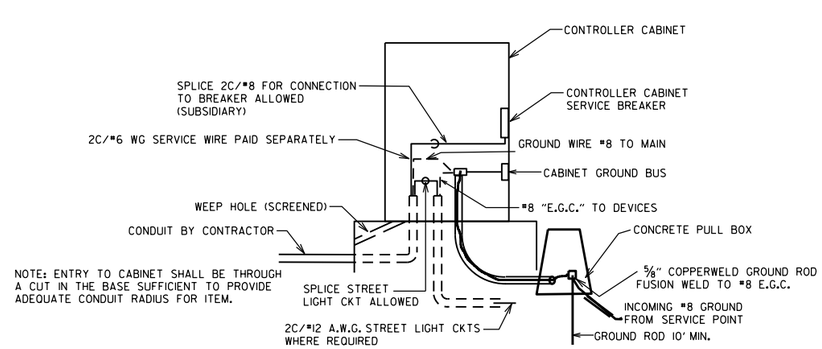

NOTE: ENTRY TO CABINET SHALL BE THROUGH A CUT IN THE BASE SUFFICIENT TO PROVIDE ADEQUATE CONDUIT RADIUS FOR ITEM.

DATE	REVISION	FILMED
11-07-19	REVISED	
11-16-17	REVISED NOTES	
09-12-13	ISSUED AS STANDARD DRAWING	
04-18-13	ADDED LIGHTNING ARRESTOR	
05-21-09	REVISED GROUNDING	
07-31-08	REVISED GROUNDING	
03-03-03	ADDED EGC NOTE	
09-26-01	REVISED	
12-27-99	REVISED	
07-28-99	REVISED	
02-05-99	ISSUED	

ARKANSAS STATE HIGHWAY COMMISSION

SERVICE POINT

STANDARD DRAWING SD-9

NOTES:
PEDESTRIAN AND TRAFFIC SIGNAL HEAD SIGNS:
EACH ITEM "TRAFFIC SIGNAL HEAD (4 SEC., 1-WAY)" SHALL INCLUDE A SPECIAL SIGN AS SHOWN, ATTACHED TO THE MAST ARM OR SPAN ASSEMBLY 12" TO THE RIGHT OF THE SIGNAL HEAD UNLESS REMOVED WITHIN THE SIGNAL PLAN NOTES.

EACH ITEM "TRAFFIC SIGNAL HEAD (3 SEC., 1-WAY)" TO BE USED AS A LEFT TURN INDICATION ONLY SHALL INCLUDE A SIGN (R10-10) AS SHOWN, ATTACHED TO THE MAST ARM OR SPAN ASSEMBLY 12" TO THE RIGHT OF THE SIGNAL HEAD.

EACH PEDESTRIAN PUSHBUTTON SHALL HAVE ONE R10-3E SIGN ATTACHED TO THE POLE ABOVE THE BUTTON. ALL SIGNS SHALL BE MANUFACTURED IN ACCORDANCE WITH SECTION 723 OF THE STANDARD SPECIFICATIONS FOR HIGHWAY CONSTRUCTION.

ALL SIGN BLANKS SHALL BE CONSTRUCTED OF ALUMINUM ALLOY (ASTM DESIGNATION B-209. ALLOY 5052-H38) WITH THICKNESS OF 0.100 INCH.

GENERAL NOTES:
1. MAST ARM POLES SHALL BE MOUNTED A MINIMUM OF FOUR (4') FEET BEHIND CURB OR SHOULDER.

2. OCTAGONAL POLES AND ARMS MEETING THE REQUIREMENTS OF THE PLANS SPECIFICATIONS CAN BE INSTALLED IN LIEU OF ROUND. ALL POLES AND ARMS IN A JOB MUST BE THE SAME SHAPE.

3. MINIMUM STRUCTURAL REQUIREMENTS:
DESIGN SPECIFICATIONS: AASHTO STANDARD SPECIFICATIONS FOR STRUCTURAL SUPPORTS FOR HIGHWAY SIGNS, LUMINAIRES AND TRAFFIC SIGNALS, 4TH EDITION (2001) WITH 2003 AND 2006 INTERIMS.

USE FATIGUE CATEGORY I FOR ALL STRUCTURES ON ROUTES WHERE THE SPEED LIMIT IS 65 MPH AND GREATER AT THE STRUCTURE LOCATION AND ON ROUTES WHERE THE SPEED LIMIT IS GREATER THAN 45 MPH WITH AN MAST ARM OF 60' OR LONGER.

USE FATIGUE CATEGORY II FOR ALL STRUCTURES ON ROUTES WHERE THE SPEED LIMIT IS LESS THAN 65 MPH AND GREATER THAN 45 MPH WITH MAST ARMS LESS THAN 60' AND ON ROUTES WHERE THE SPEED LIMITS OF 45 MPH AND LESS WITH AN MAST ARM OF 60' OR LONGER.

USE FATIGUE CATEGORY III FOR ALL STRUCTURES WHERE THE SPEED LIMIT IS 45 MPH AND LESS AND MAST ARMS LESS THAN 60'.

CONSTRUCTION SPECIFICATIONS:
STANDARD SPECIFICATIONS FOR HIGHWAY CONSTRUCTION (CURRENT EDITION) WITH APPLICABLE SUPPLEMENTAL SPECIFICATIONS AND SPECIAL PROVISIONS.

BASE WIND SPEED: 90 MPH.

STEEL MEMBERS CONSIDERED MAIN LOAD CARRYING MEMBERS WITH A THICKNESS GREATER THAN ½" SHALL MEET THE LONGITUDINAL CHARPY V-NOTCH TEST SPECIFIED IN SUBSECTION 807.05 OF THE STANDARD SPECIFICATIONS.

DEAD LOAD: AS A MINIMUM, DESIGN SHALL BE BASED ON THE FIXED ATTACHMENTS SHOWN BELOW OR AS MODIFIED IN THE PLANS.

ALL SIGNAL HEADS TO BE ONE WAY, TWELVE (12") INCH AND HAVE FIVE (5") INCH BACK PLATES:

SIGNAL HEADS AT THE END OF MAST ARM - ONE 4 SEC., 85 LB., 14.5 SQ. FT., ONE SIGN MOUNTED 3 FEET FROM SIGNAL HEAD (2'-0" X 2'-6"; 20 LB.) REMAINING SIGNAL HEADS SPACED AT 8 FT. (3 SEC., 56 LB., 8.3 SQ. FT.):
DESIGN TO ACCOMMODATE:
2 SIGNAL HEADS FOR MAST ARMS 10 FT. TO 16 FT.
3 SIGNAL HEADS FOR MAST ARMS 18 FT. TO 24 FT.
4 SIGNAL HEADS FOR MAST ARMS OVER 26 FT.

STREET NAME SIGN - 72" X 18", 36 LB., MOUNTED SUCH THAT OUTSIDE EDGE IS NOT GREATER THAT 12 FT. FROM POLE. DEPENDING UPON POSITION OF SIGNAL HEAD ADJACENT TO POLE, SIGN MAY OVERLAP POLE SHAFT.
ROADWAY LUMINAIRES (WHERE REQUIRED ON PLAN SHEET) - VARIABLE ARM LENGTH (MAX. WT. 75 LB., 3.3 SQ. FT.)
PEDESTRIAN SIGNALS - TWO 1 SEC., 12 INCH MOUNTED 8 FT. FROM BASE OF POLE, POST MOUNTED 3 SEC. SIGNAL HEAD AT 10 FT. ON SIDE OF POLE.

4. POLE/MAST ARM CAP - POLE AND MAST ARM CAPS SHALL BE PROVIDED, FABRICATED OF EITHER STEEL OR CAST ALUMINUM.

5. HAND HOLE - HAND HOLES SHALL BE 4 IN. X 6 IN. FOR STANDARD, AND 3 IN. X 5 IN. FOR PED POLES. MINIMUM PLACED APPROXIMATELY 12 INCHES FROM BASE, AND SHALL BE FIXED WITH A BOLT DOWN COVER. A VACCUM FORMED ABS COVER IS AN ACCEPTABLE ALTERNATE TO STEEL. POLES GREATER THAN 21 FT. IN HEIGHT (FOR ROADWAY LUMINAIRE ATTACHMENT) SHALL INCLUDED A HAND HOLE WITHIN 12 INCHES OF MAST ARM(S) ATTACHMENT(S).

6. POLE/MAST ARM TAPER SLOPE - AVERAGE TAPER OF SIGNAL MAST ARMS AND POLE SHAFT SHALL BE 0.125 TO 0.15 INCHES PER FOOT.

MAST ARM CENTERLINE ANGLE AT ATTACHMENT POINT WITH POLE SHALL MAINTAIN NOT LESS THAN 0.5 DEGREES OR MORE THAN 4 DEGREES POSITIVE SLOPE WITH A LINE PERPENDICULAR TO THE POLE CENTERLINE. THE MAST ARM SHALL MAINTAIN A POSITIVE SLOPE AFTER IT IS PLACED UNDER LOAD.

7. NUT COVERS - EACH POLE SHALL INCLUDE A BOLT DOWN NUT COVER FOR EACH ANCHOR BOLT.

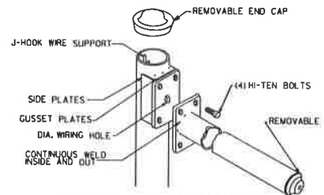

TYPICAL ARM ATTACHMENT

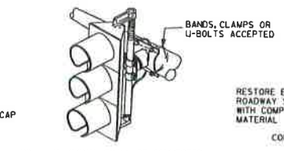

NOTE: THE SIGNAL SHALL BE CONNECTED TO THE MAST ARM BY BRACKETING AS DIRECTED BY THE ENGINEER.

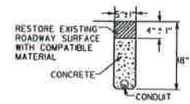

TRENCHING DETAIL
(FOR SAW CUT TRENCH IN ROADWAY)

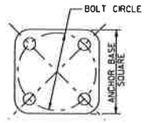

ANCHOR BASE

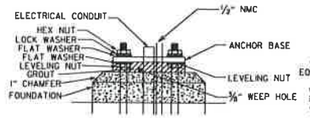

THE SWEEPING "L" IN THE FOUNDATION SHALL BE THE SAME SIZE AS THE CONDUIT FROM THE FOUNDATION TO THE PULL BOX AS SHOWN ON THE PLANS.

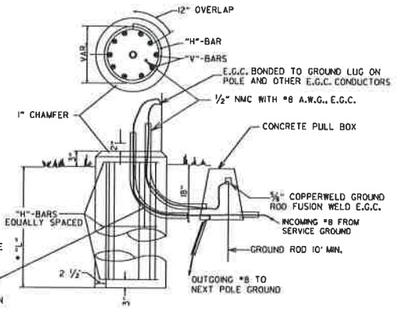

THE GROUND ROD SHALL BE FUSION WELDED TO A 1C/#8 A.W.G. SOLID COPPER GROUND WIRE. ATTACHMENT TO THE PRIMARY GROUND MAY BE BY AN APPROVED CLAMP. THE GROUND ROD IS TO BE LOCATED IN THE CONCRETE PULL BOX.

TYPICAL FOUNDATION DETAILS

POLE FOUNDATION MINIMUM DIMENSIONS AND STEEL REINFORCING. ALL REINFORCING STEEL SHALL BE GRADE 40 MIN.

ARM LENGTH	FOUNDATION DIAMETER	DEPTH "L"*	STEEL VERTICAL	STEEL HORIZONTAL	STEEL O.C.
PED	30"	7'-0"	12-#7 (6'-6")	10-#4	8.44"
2' TO 12'	30"	10'-6"	12-#7 (10'-0")	15-#4	8.42"
OVER 12' TO 20'	30"	11'-6"	12-#7 (11'-0")	16-#4	8.66"
OVER 20' TO 35'	36"	12'-6"	13-#8 (12'-0")	17-#4	8.88"
OVER 35' TO 50'	36"	13'-6"	13-#8 (13'-0")	19-#4	8.56"
OVER 50' TO 72'	42"	14'-6"	18-#8 (14'-0")	20-#4	8.74"
TWINS TO 20'	30"	16'-0"	12-#6 (15'-6")	22-#4	8.76"
TWINS OVER 20' TO 44'	36"	16'-0"	13-#8 (15'-6")	22-#4	8.76"
TWINS OVER 44' TO 50'	42"	16'-0"	18-#8 (15'-6")	22-#4	8.76"
TWINS OVER 50' TO 72'	42"	16'-6"	18-#8 (16'-0")	23-#4	8.64"

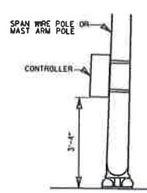

SPAN WIRE SUPPORT POLE AND MAST ARM POLE MOUNTED

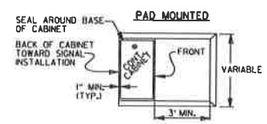

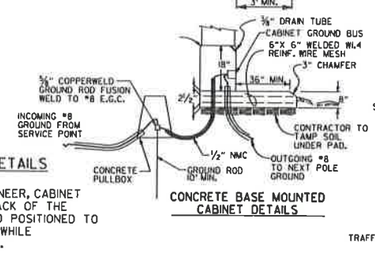

CONCRETE BASE MOUNTED CABINET DETAILS

CONTROLLER CABINET MOUNTING DETAILS

NOTE:
UNLESS OTHERWISE DIRECTED BY THE ENGINEER, CABINET ORIENTATION SHALL BE SUCH THAT THE BACK OF THE CABINET IS PARALLEL TO THE STREET AND POSITIONED TO ALLOW VISIBILITY OF THE SIGNAL DISPLAY WHILE OBSERVING THE CONTROLLER FRONT PANEL.

8. GROUND ROD - A 10' X ⅝" GROUND ROD SHALL BE INSTALLED IN THE CONCRETE PULL BOX FOR EACH POLE AND THE CONTROLLER. PAYMENT FOR THE GROUND ROD AND ½" NMC SHALL BE INCLUDED IN ITEM 714 FOR SIGNAL POLES AND ITEM 701 FOR THE CONTROLLER. THE CONCRETE PULL BOX AND CONDUCTOR BOX SHALL BE PAID SEPERATELY.

9. POLE BASE/FOUNDATION - ANCHOR BOLTS SHALL INCLUDE AS A MINIMUM, ONE LEVELING NUT, TWO FLAT WASHERS, ONE LOCK WASHER, AND ONE HEX NUT. PERIMETER OF ANCHOR BASE SHALL BE GROUTED WITH A ¼" WEEP HOLE. ALL CONCRETE SHALL BE CLASS "S" OR GREATER.

10. CONCRETE - ALL CONCRETE FOR CONTROLLER CABINET AND POLE FOUNDATIONS SHALL BE CLASS "S" OR GREATER.

11. PEDESTRIAN PHASES - PEDESTRIAN MOVEMENTS SHALL BE PUSH BUTTON ACTUATED AND CONCURRENTLY TIMED, UNLESS OTHERWISE INDICATED ON THE PLAN SHEET(S). FURNISHING AND INSTALLING PEDESTRIAN PUSH SWITCH SHALL BE CONSIDERED SUBSIDIARY TO THE ITEM 707 PEDESTRIAN SIGNAL HEAD.

* WHEN THE GROUND ELEVATION AT THE POLE IS LOWER THAN THE ROADWAY ELEVATION, THE LENGTH OF FOUNDATION ABOVE THE GROUND MAY BE INCREASED TO PROVIDE THE REQUIRED SIGNAL HEAD CLEARANCE ABOVE THE ROADWAY. WHEN THE REQUIRED LENGTH OF FOUNDATION ABOVE THE GROUND IS 18" OR LESS, NO INCREASE IN DEPTH "L" WILL BE REQUIRED. WHEN THE REQUIRED LENGTH OF FOUNDATION ABOVE THE GROUND IS 5'-6" OR LESS, INCREASE DEPTH "L" BY 1'-0". FOR LENGTHS GREATER THAN 5'-6", DEPTH "L" SHALL BE ADJUSTED AS DIRECTED BY THE ENGINEER. LONGITUDINAL REINFORCING, AS SHOWN IN THE TABLE, SHALL BE PROVIDED FOR THE LENGTH OF THE EXTENDED SHAFT AND #4 TIES SHALL BE PROVIDED AT A SPACING NOT TO EXCEED 9" ON CENTERS. PAYMENT WILL BE IN ACCORDANCE WITH SECTION 714 TRAFFIC SIGNAL MAST ARM AND POLE WITH FOUNDATION OF THE STANDARD SPECIFICATIONS.

** IN LIEU OF DESIGNING THE STRUCTURE TO RESIST PERIODIC GALLOPING, A VIBRATORY MITIGATION DEVICE MAY BE PROVIDED BY THE POLE MANIFACTURER. THE VIBRATORY MITIGATION DEVICE SHALL BE AN ANTI-GALLOPING PANEL CONSISTING OF A 60" X 16" X 0.125" SIGN BLANK MOUNTED NEAR THE END OF THE MAST ARM NOT TO EXCEED ONE QUARTER OF THE LENGTH OF THE MAST ARM FROM THE END OF THE MAST ARM WITH THE LONG AXIS OF THE PANEL COLLINEAR WITH THE LONG AXIS OF THE MAST ARM. THE PANEL SHOULD BE MOUNTED AT SUCH THE HEIGHT AS TO PROVIDE AT LEAST 6" CLEAR FROM THE TOP OF ANY SIGNAL ASSEMBLY OF SIGN PANEL LOCATED ON THE MAST ARM WITHIN THE LENGTH OF THE ANTI-GALLOPING PANEL.

TRUCK-INDUCED GUST LOADS SHALL BE EXCLUDED FOR FATIGUE DESIGN FOR ALL STRUCTURES EXCEPT MAST ARMS MOUNTED OVER FACILITIES WITH POSTED SPEEDS OF 65 MPH OR GREATER AT THE LOCATION OF THE STRUCTURE.

SIGNAL OPERATION NOTES:

FLASHING OPERATION - PRIOR TO NORMAL OPERATION, SIGNAL SHALL BE FLASHED FOR A PERIOD OF 3 TO 5 WORK DAYS OR AS DIRECTED BY THE ENGINEER. SIGNAL SHALL BE PLACED IN OPERATION ONLY ON A REGULAR WORK DAY, EXCEPT FRIDAY.

THE CONTRACTOR MAY BE REQUIRED TO ALTER THE FLASHING DISPLAY DURING THE TEMPORARY FLASH PERIOD. AT THE TIME THE INTERSECTION IS PLACED IN PERMANENT OPERATION, THE FLASH SEQUENCE SHALL THEN BE RETURNED TO THAT INDICATED ON THE PLAN SHEETS. NO ADDITIONAL COMPENSATION SHALL BE ALLOWED FOR THESE ALTERATION IN FLASH SEQUENCE.

SPECIAL NOTE: 90 MPH WIND ZONE DESIGN, SEE NOTE 3. MINIMUM STRUCTURAL REQUIREMENTS.

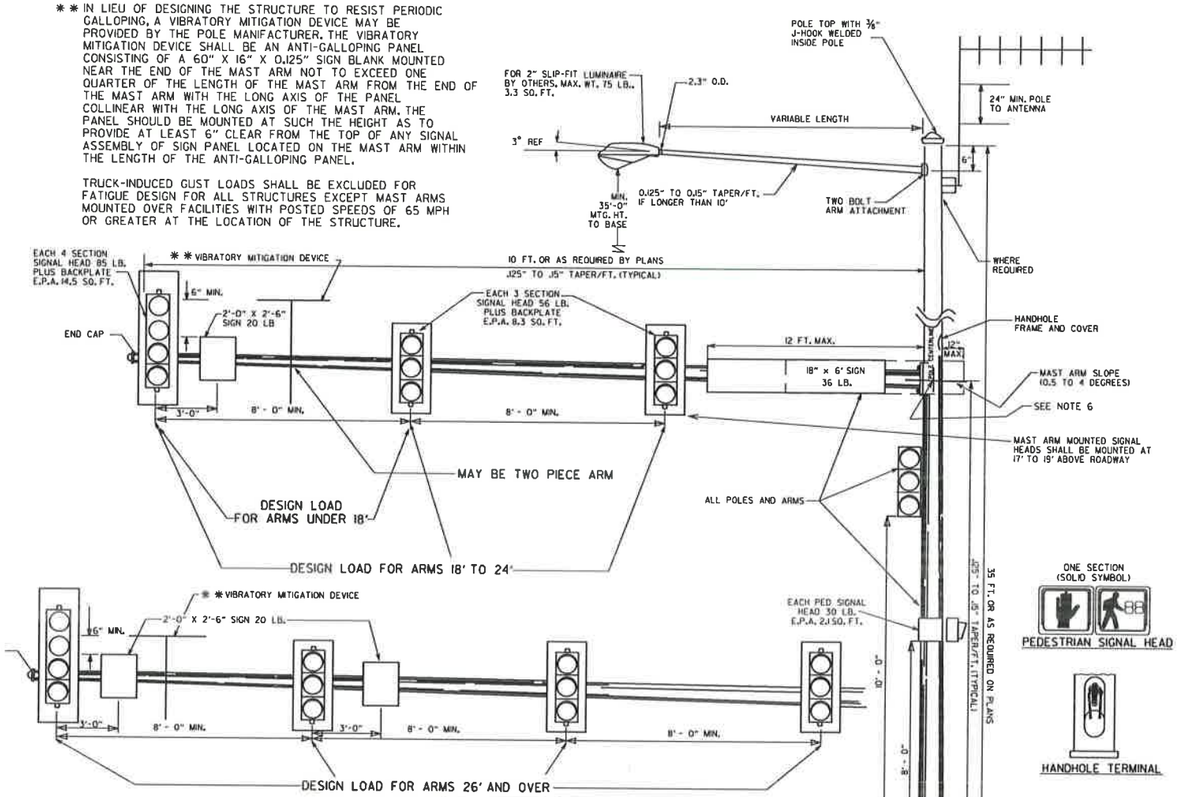

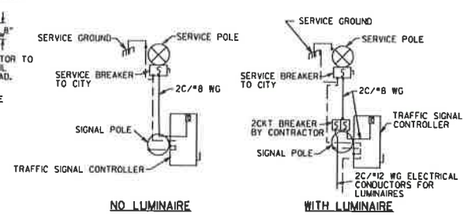

NO LUMINAIRE — WITH LUMINAIRE

SERVICE DISCONNECT

NOTE: ELECTRICAL GROUND CONDUCTOR IS BONDED TO ALL METAL ENCLOSURES

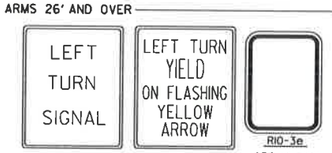

R10-10 — SPECIAL

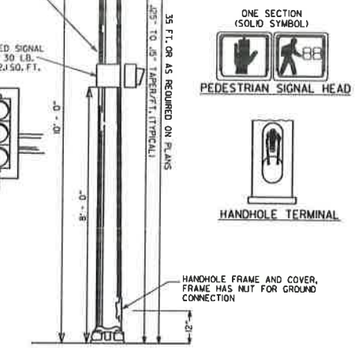

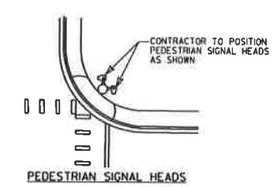

PEDESTRIAN SIGNAL HEADS

DATE	REVISION	FILMED
11-16-17	REVISED NOTES, ADDED PEDESTRIAN SIGNAL HEAD DETAIL, ADDED HANDHOLE TERMINAL DETAIL, ADDED TRENCHING DETAIL	
02-27-14	REVISED NOTES.	
09-12-13	ISSUED AS STANDARD DRAWING	
12-08-16	REVISED NOTES	
02-27-14	REVISED NOTES	
09-12-13	ISSUED AS STANDARD DRAWING	
07-21-11	REVISED VMD, SIGNAL HEADS	
05-21-09	REVISED GROUNDING	
07-31-08	REVISED GROUNDING	
04-25-08	ADDED VIBRATORY MITIGATION DEVICE & NOTES	
04-18-08	REVISED AASHTO NOTES	
04-17-08	REVISED TO 2001 AASHTO STANDARDS	
10-12-04	REVISED CABINET ORIENTATION	
06-23-04	REVISED	
05-11-04	REV. NOTE 3/AASHTO REQUIREMENTS	
06-11-01	REV. NOTES & POLE MAST ARM SLOPE	
04-11-01	REVISED POLE TAPERS	
04-25-00	REV. NOTES & SIGNAL HEAD PLACEMENT	
11-22-99	REVISED FOUNDATION DETAILS	
11-17-98	REVISED DETAILS AND NOTES	
11-21-95	ISSUED	

ARKANSAS STATE HIGHWAY COMMISSION

STEEL POLE WITH MAST ARM

STANDARD DRAWING SD-11

POST SIZE	BASE CONNECTION DATA											FUSE PLATE DATA										
	BOLT SIZE	BOLT TORQUE (INCH/LBS)	A	B	C	D	E	t_1	t_2	W	R	F	G		J	K	M	d_1	d_2	t_3	BOLT SIZE	WT. OF EACH FUSE PLATE LBS.
W 6X9	5/8" x 2 3/4"	450"-680"	5"	2"	1 1/4"	2 3/4"	1 1/8"	3/4"	1/2"	1/4"	11/32"	4 1/4"	2"		4"	2 1/4"	1"	9/16"	3/4"	1/4"	1/2" x 1 1/2"	1.01
W 6X12																						
W 6X15												5"	2 1/2"		6"	3 1/2"	1 1/2"	11/16"	1 1/4"	3/8"	5/8" x 2 1/4"	2.51
W 8X18	3/4" x 3 1/2"	750"-1050"	6"	2 1/4"	1 3/8"	3 1/2"	1 1/4"	1"	3/4"	5/16"	11/32"	5"	2 1/2"		5 1/4"	2 3/4"	1 1/4"	13/16"	1 1/16"	3/8"	3/4" x 2 1/4"	2.26
W 8X21												5 1/2"	2 1/2"		5 1/4"	2 3/4"	1 1/4"	13/16"	1"	1/2"	3/4" x 2 1/4"	3.35
W 10X22												6"	3"		5 3/4"	2 3/4"	1 3/8"	13/16"	1 1/8"	1/2"	3/4" x 2 1/4"	4.03
W 10X26																						
W 12X26												6"	3"		6 1/2"	3 1/2"	1 5/8"	13/16"	1 3/16"	1/2"	3/4" x 2 1/4"	4.47

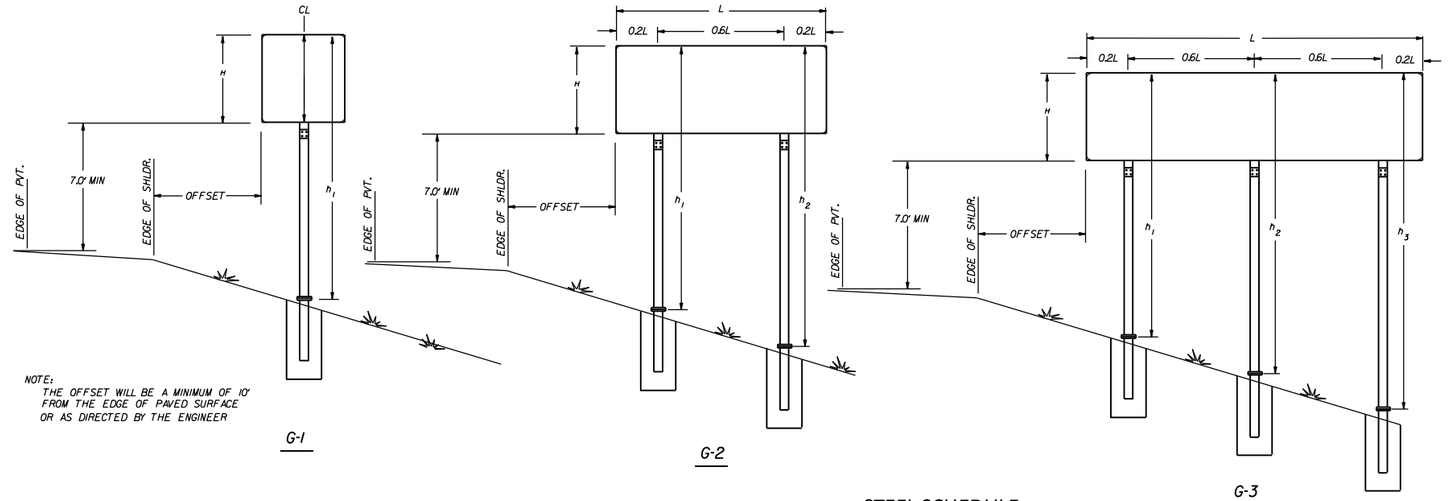

NOTE:
THE OFFSET WILL BE A MINIMUM OF 10' FROM THE EDGE OF PAVED SURFACE OR AS DIRECTED BY THE ENGINEER

G-1 G-2 G-3

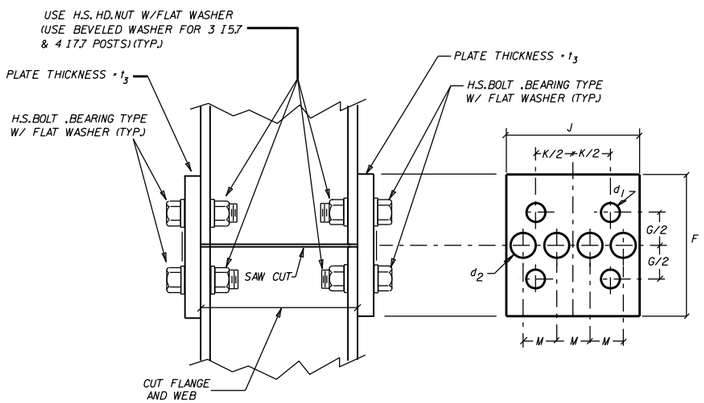

NOTE: USE H.S.HEX HEAD BOLTS.HEX HEAD NUTS AND BEVEL OR FLAT WASHERS (WHERE REQ.) UNDER NUTS. ALL HOLES SHALL BE DRILLED.ALL PLATE CUTS SHALL PREFERABLY BE SAW CUTS.HOWEVER FLAME CUTTING WILL BE PERMITTED PROVIDED ALL EDGES ARE GROUND. METAL PROJECTING BEYOND THE PLANE OF THE PLATE FACE WILL NOT BE PERMITTED. STEEL FUSE PLATES SHALL CONFORM TO THE REQUIREMENTS OF ASTM-A36,ASTM-A441,ASTM-572 GRADE 50,OR ASTM-A588 MAY BE SUBSTITUTED FOR A36 AT THE OPTION OF THE FABRICATOR. STEEL USED SHALL HAVE AN ULTIMATE TENSILE STRENGTH NOT TO EXCEED 80 KSI.

NOTE: SECTIONS SHOWN ARE FOR INSTALLATION ON THE RIGHT SHOULDER AND IN THE GORE. BOLT HOLES IN BASE PLATE ARE SLOTTED AND BEVELED AS SHOWN. USE H.S.BOLTS WITH HEX HD.,HEX NUT AND THREE FLAT WASHERS FOR EACH BOLT.SEE TABLE FOR BOLT DIA. AND TORQUE.
NOTE: ASSEMBLE SIGN POST TO STUB POST USING THE BOLTS SPEC.IN THE TABLE AND AS SHOWN IN THE ELEVATION DETAILS.THERE SHALL BE THREE FLAT WASHERS ON EACH BOLT LOCATED AS SHOWN IN THE ELEVATIONS. USE A SHIM TO PLUMB THE SIGN POST.THEN TIGHTEN THE BOLTS USING A 12" TO 15" WRENCH UNTIL THE WASHERS AND SHIMS ARE SEATED AND THE BOLT THREADS ARE CLEAR ,THEN LOOSEN EACH BOLT IN TURN AND RETIGHTEN IN A SYSTEMATIC ORDER TO THE PRESCRIBED TORQUE (SEE TABLE).THE BURR THREADS ADJACENT TO THE BACK SIDE OF THE NUT TO PREVENT LOOSENING.

STEEL SCHEDULE

FOOTING DIAMETER	#3 TIE BARS		
	DIAMETER	BAR LENGTH	POUNDS
INCHES	INCHES	FEET	
18	12	4.39	1.65
24	18	5.96	2.24
30	24	7.53	2.83
36	30	9.1	3.42

FOOTINIG DEPTH	#6 STRAIGHT BARS		
	BAR LENGTH	NUMBER REQ'D.	POUNDS
FEET	FEET		
2.50	2.00	8	24.03
3.00	2.50	8	30.04
3.50	3.00	8	36.05
4.00	3.50	8	42.06
4.50	4.00	8	48.06
5.00	4.50	8	54.07
5.50	5.00	8	60.08
6.00	5.50	8	66.09
6.50	6.00	8	72.10
7.00	6.50	8	78.10
7.50	7.00	8	84.11
8.00	7.50	8	90.12

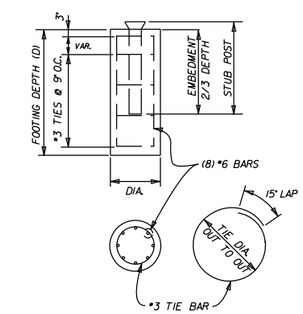

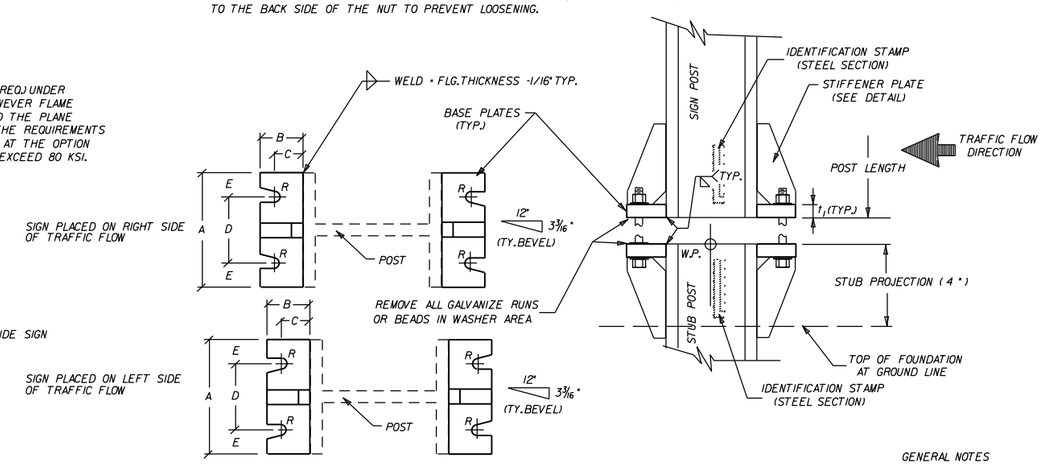

NOTE: BOLT HOLES.USED IN THE MOUNTING OF STANDARD SIGNS SHALL BE LOCATED IN THE FLANGE ADJACENT TO THE NEAR EDGE OF PAVEMENT FOR SINGLE POST ASSEMBLIES AND IN THE OUTSIDE FLANGES FOR MULTIPLE POST ASSEMBLIES.

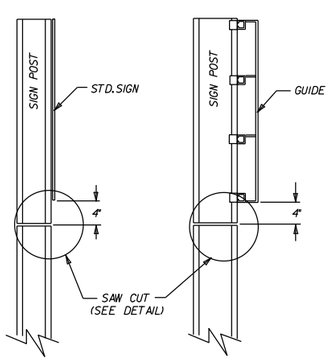

NOTE: POST SHALL BE SAW CUT AFTER GALVANIZING AND THE CUT SURFACE TREATED.AFTER PLATE IS INSTALLED AND ALL BOLTS FULLY TIGHTENED.WITH AN APPROVED ZINC SOLDER MEETING THE FEDERAL SPEC.O-G-93 (STICK ONLY).

STANDARD SIGNS GUIDE SIGNS

FUSE PLATE DETAILS

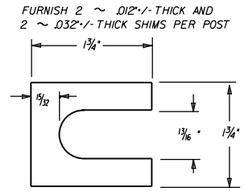

SHIM DETAIL

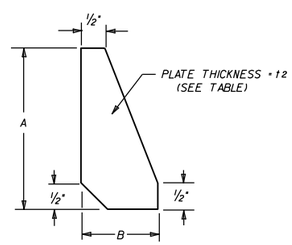

STIFFENER PLATE DETAIL

GENERAL NOTES

TIGHTEN THE HIGH STRENGTH BOLTS IN THE BASE CONNECTION ONLY TO THE TORQUE SHOWN. DO NOT OVERTIGHTEN.

BASE PLATES AND STIFFENER PLATES SHALL BE OF THE SAME MATERIAL AS THE PRIMARY SUPPORT POSTS WHICH THEY ARE WELDED.

REFER TO THE PLANS FOR FOOTING DIMENSIONS.

EACH STUB POST AND SIGN POST SHALL HAVE A PERMANENT IDENTIFYING STAMP WHICH SPECIFIES THE STEEL SECTION USED. IF THE CONTRACTOR ELECTS TO SHIP THE STUB POST SEPARATE FROM THE SIGN POST A MATCH MARK SYSTEM WILL BE REQUIRED.

FOOTING QUANTITIES

FOOTINIG DEPTH	NUMBER TIE BARS REQ'D	18" DIAMETER		24" DIAMETER		30" DIAMETER		36" DIAMETER	
		CLASS S CONCRETE	REINF STEEL	CLASS S CONCRETE	REINF STEEL	CLASS S CONCRETE	REINF STEEL	CLASS S CONCRETE	REINF STEEL
FEET		CU. YD.	(GRADE 60)	CU. YD.	(GRADE 60)	CU. YD.	(GRADE 60)	CU. YD.	(GRADE 60)
2.50	4	0.16	31						
3.00	4	0.20	37						
3.50	5	0.23	44						
4.00	6	0.26	52	0.47	56				
4.50	6	0.29	58	0.52	62				
5.00	7	0.33	66	0.58	70	0.91	74		
5.50	8			0.64	78	1.00	83		
6.00	8			0.70	84	1.09	89	1.57	93
6.50	9					1.18	98	1.70	103
7.00	10					1.27	106	1.83	112
7.50	10							1.96	118
8.00	11							2.09	128

SIGN POST AND STUB POST

DATE	REVISION	FILMED
9-12-13	ISSUED	

ARKANSAS STATE HIGHWAY COMMISSION

DETAIL OF BREAKAWAY SIGN SUPPORTS FOR GUIDE SIGNS

STANDARD DRAWING SHS-3

TYPICAL DETAIL

TYPE A

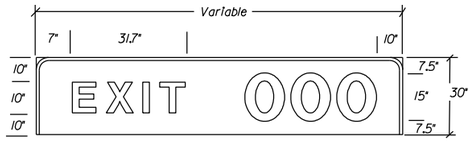

EXIT WITH 1 DIGIT 84"X30"=17.50 SF
EXIT WITH 2 DIGITS 96"X30"=20.0 SF
EXIT WITH 3 DIGITS 114"X30"=23.57 SF

TYPE B

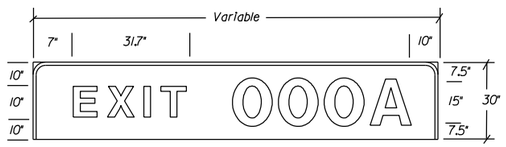

EXIT WITH 1 DIGIT PLUS "A"OR"B" 96"X30"=20.0 SF
EXIT WITH 2 DIGITS PLUS "A"OR"B" 114"X30"=23.57 SF
EXIT WITH 3 DIGITS PLUS "A"OR"B" 126"X30"=26.25 SF

TYPE C

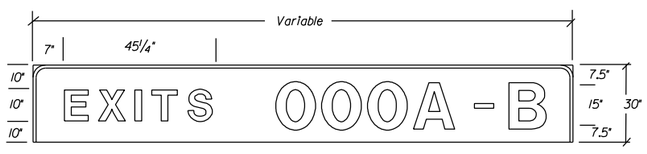

EXITS WITH 1 DIGIT PLUS "A"&"B" 132"X30"=27.50 SF
EXITS WITH 2 DIGITS PLUS "A"&"B" 150"X30"=31.25 SF
EXITS WITH 3 DIGITS PLUS "A"&"B" 168"X30"=35.00 SF

TYPE D

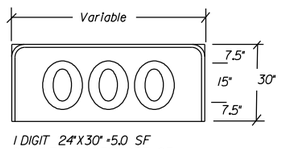

1 DIGIT 24"X30" =5.0 SF
2 DIGITS 42"X30" =8.75 SF
3 DIGITS 60"X30" =12.50 SF

TYPE E

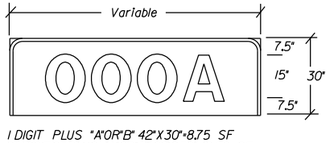

1 DIGIT PLUS "A"OR"B" 42"X30"=8.75 SF
2 DIGITS PLUS "A"OR"B" 60"X30"=12.50 SF
3 DIGITS PLUS "A"OR"B" 78"X30"=16.25 SF

EXIT PANEL DETAILS

NOTE: EXIT NUMBER PANELS SHALL HAVE WHITE LEGENDS AND BORDERS. THE BACK GROUND COLOR WILL BE AS USE SPECIFIES. SHEETING TYPE WILL BE THE SAME AS THE GUIDE SIGN WHICH THE EXIT PANEL IS ATTACHED OR AS SPECIFIED IN THE PLANS. PAYMENT FOR ALL POST CLIPS, BOLTS, AND ANGLES SHALL BE SUBSIDIARY TO THE ITEM "EXIT NUMBER PANEL".

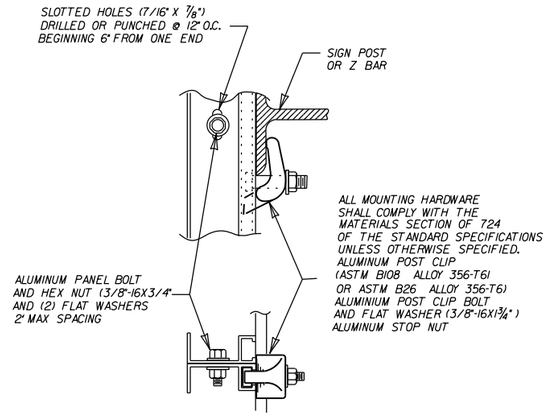

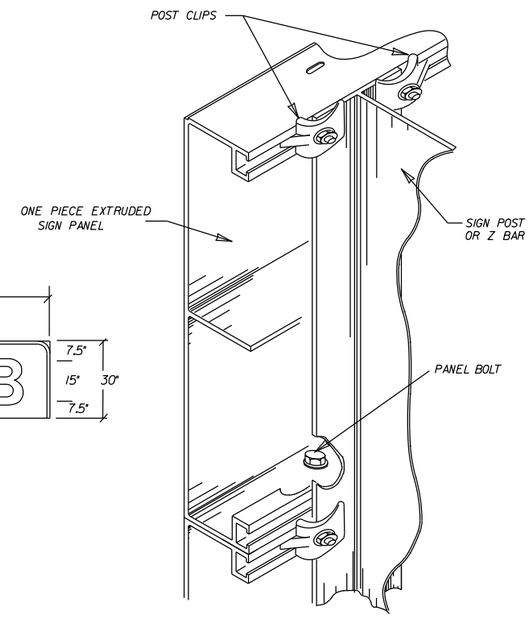

MOUNTING HARDWARE

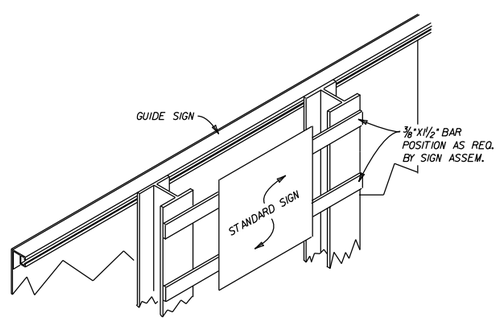

SECONDARY SIGN INSTALLATION ON BACKSIDE OF GUIDE SIGN

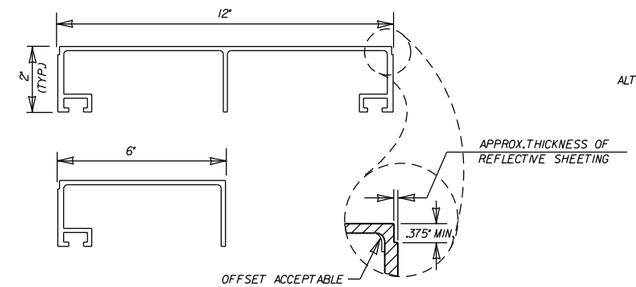

ONE PIECE EXTRUDED SIGN PANELS

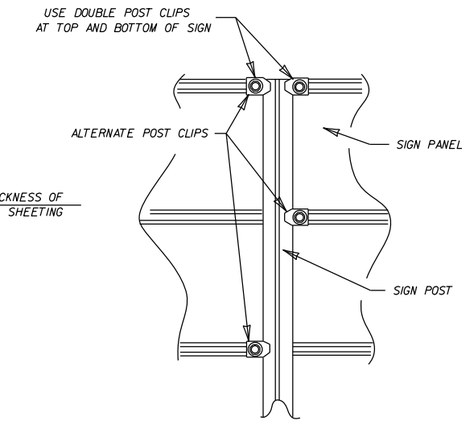

POST CLIP PLACEMENT

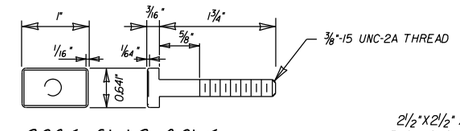

POST CLIP BOLT

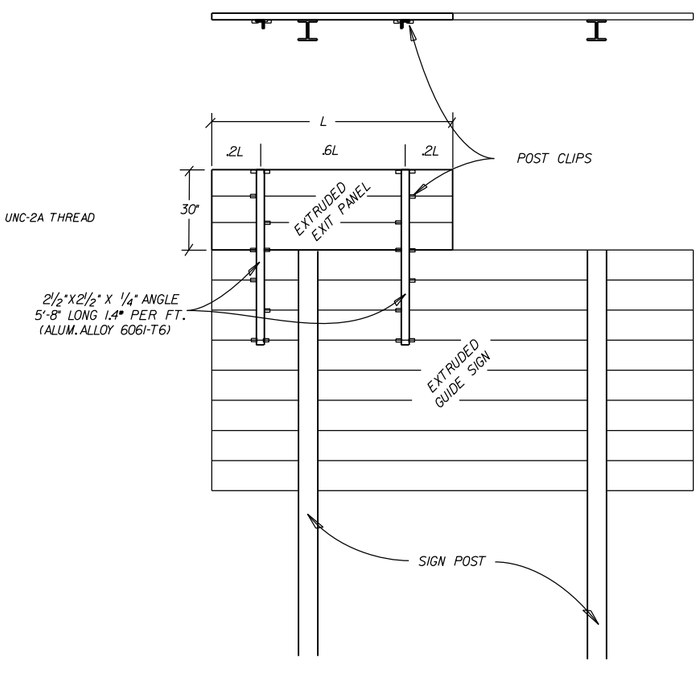

DATE	REVISION	FILMED
9-12-13	ISSUED	

ARKANSAS STATE HIGHWAY COMMISSION

DETAILS OF GUIDE SIGN PANELS

STANDARD DRAWING SHS-5

THE CONTRACTOR SHALL DRILL AND POP-RIVET LEGEND, SHIELDS, ARROWS, OR OTHER COPY AS SHOWN.

MOUNTING DETAILS FOR DEMOUNTABLE LEGEND ON GUIDE SIGNS

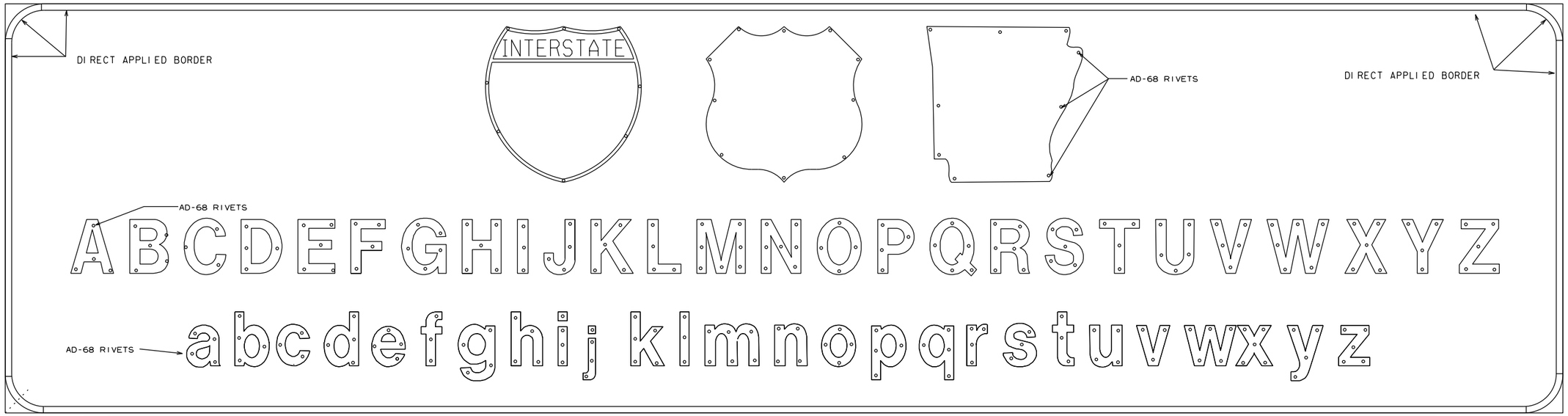

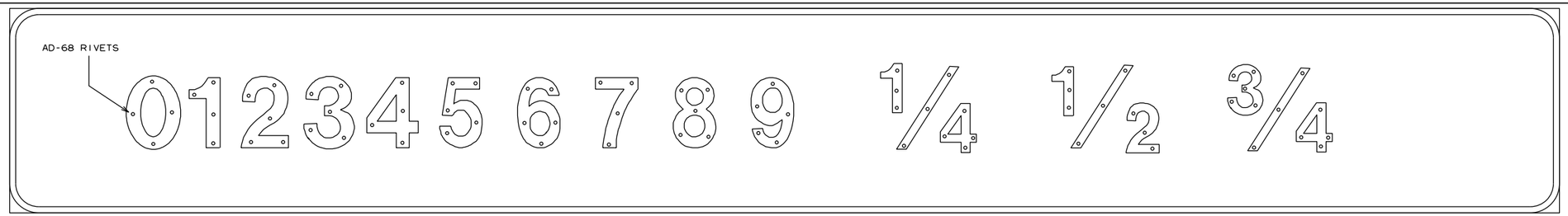

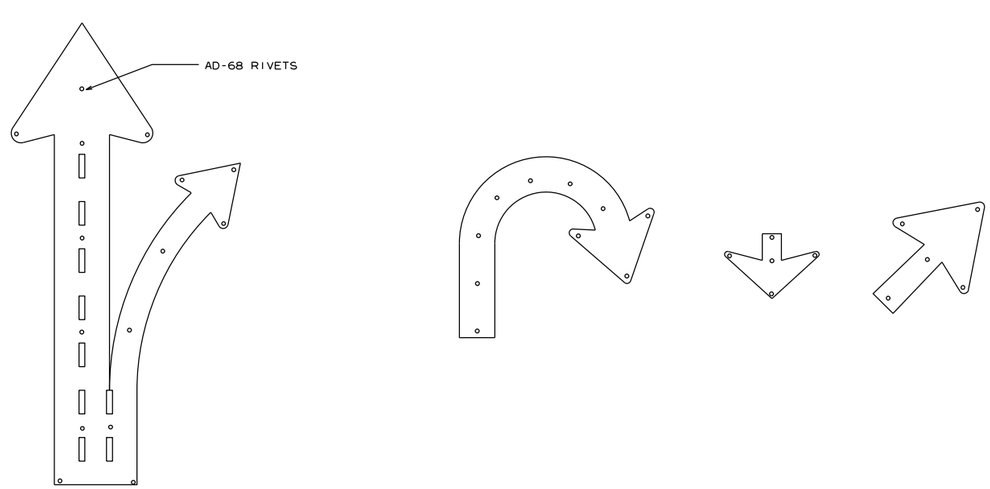

NOTES:

LEGEND ON GUIDE SIGNS ON THE MAIN LANES SHALL BE DEMOUNTABLE LEGEND. LEGEND ON GUIDE SIGNS ON CROSS ROADS AND RAMPS SHALL BE DIRECT APPLIED. THE DEMOUNTABLE AND DIRECT APPLIED LEGENDS SHALL BE TYPE IX SHEETING.

THE BACKGROUND ON ALL GUIDE SIGNS AND STANDARD SIGNS SHALL BE CONSTRUCTED USING TYPE III SHEETING.

TYPE IX SHEETING FOR BORDER, LEGEND, SHIELDS, ARROWS, OR OTHER COPY SHALL BE ORIENTED VERTICALLY AS PER MANUFACTURERS' DATUM MARKS, ORIENTATION MARKS, OR OTHER RECOMMENDATIONS.

SIGN LEGEND, SHIELDS, ARROWS OR OTHER COPY SHALL BE APPLIED WITH RIVETS ONLY.

NO OTHER METHOD OF APPLYING CHARACTERS IS ALLOWED.

DATE	REVISION	FILMED
9-12-13	ISSUED	

ARKANSAS STATE HIGHWAY COMMISSION

MOUNTING DETAILS FOR DEMOUNTABLE LEGEND ON GUIDE SIGNS

STANDARD DRAWING SHS-6

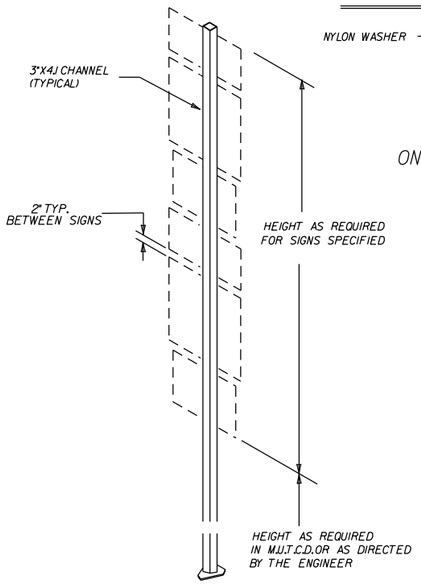

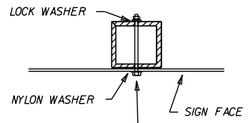

ONE SIGN

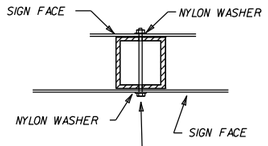

TWO SIGNS

CHANNEL SHALL BE FULL LENGTH OF RECTANGULAR AND SQUARE SIGNS AND SHALL EXTEND 1 1/2" BEYOND BOLT HOLES ON DIAMOND OR IRREGULAR SHAPED SIGNS.

MOUNTING HARDWARE

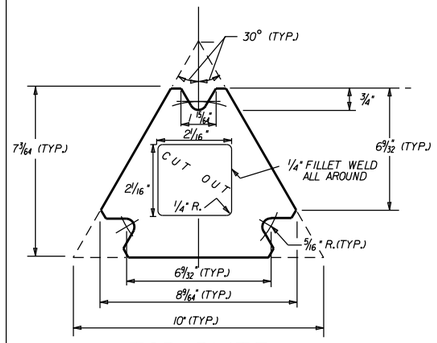

TOP PLATE

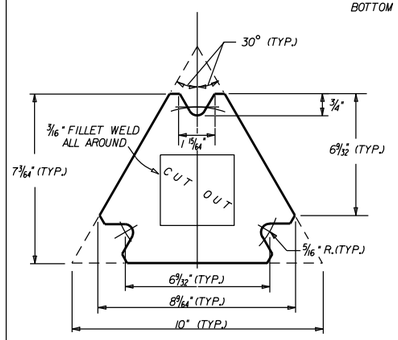

BOTTOM PLATE

GENERAL NOTES:

THE TOP PLATE OF TRIANGULAR SLIP BASES SHALL HAVE THE SAME EXTERIOR DIMENSIONS AS THE BOTTOM PLATE.

INSIDE DIAMETER OF THE SIGN POST SHALL BE CUT THROUGH THE CENTER OF THE TOP PLATE WITH THE HOLE EDGE BEVELED AS SHOWN. THE BEVEL END SHALL BE TANGENT TO THE BOLT HOLE. ANY MISALIGNMENT SHALL BE REMOVED BY GRINDING. FACE OF BEVEL SHALL BE FINISHED TO A MINIMUM SMOOTHNESS OF 1-500.

OTHER MASH COMPLIANT BREAKAWAY SIGN SUPPORTS THAT HAVE THE SAME TOP PLATE DIMENSIONS AND SUPPORT 2 1/4" X 2 1/4" SQUARE TUBE SIGN POSTS MAY BE SUBSTITUTED AS APPROVED BY THE ENGINEER.

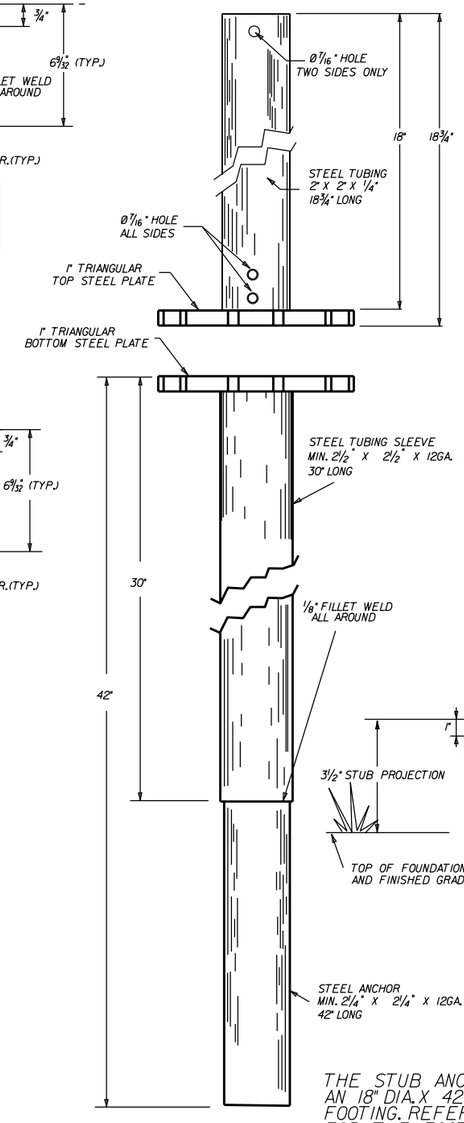

THE STUB ANCHOR SHALL BE SET IN AN 18" DIA. X 42" DEEP CONCRETE FOOTING. REFER TO STD. DRWG. SHS-3 FOR THE FOOTING DETAILS.

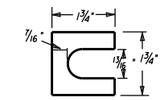

FURNISH (2) .012" THICK AND (2) .032" THICK SHIMS PER POST

SHIM DETAIL

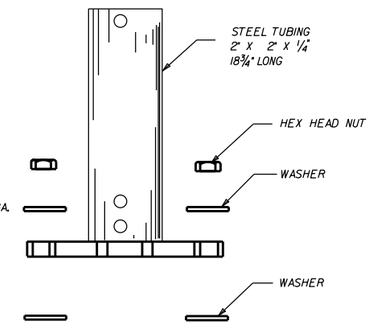

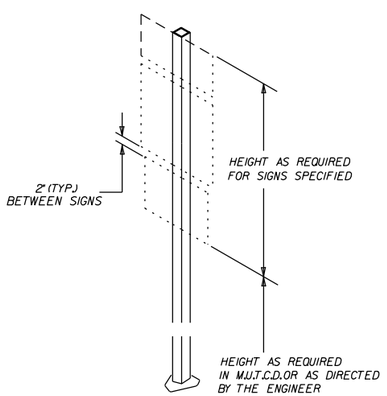

TYPE-1

BASIS OF ESTIMATE
APPROX. 100 lbs STEEL

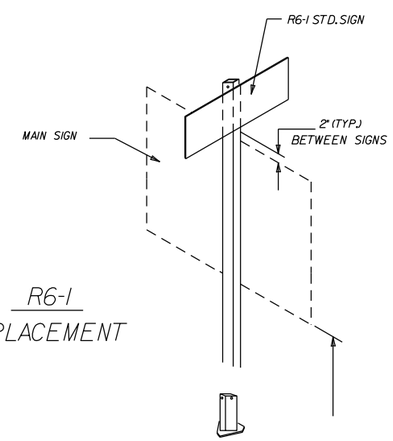

R6-1 PLACEMENT

			ARKANSAS STATE HIGHWAY COMMISSION
			DETAIL OF OMNI-DIRECTIONAL BREAKAWAY SIGN SUPPORTS
9-12-13	ISSUED		STANDARD DRAWING SHS-7
DATE	REVISION	FILMED	

R1-1

STANDARD 30"X30"
EXPRESSWAY 36"X36"
SPECIAL 48"X48"

R1-2

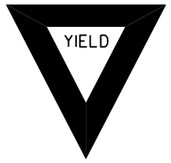

STD. 36"X36"X36"
EXPWY. 48"X48"X48"
FWY. 60"X60"X60"

R2-1

STD. 24"X30"
EXPWY. 36"X48"
FWY. 48"X60"

W3-5

STD. 36"X36"
EXPWY. 48"X48"
FWY. 48"X48"

W3-5a

STD. 36"X36"
EXPWY. 48"X48"
FWY. 48"X48"

R4-1

STD. 24"X30"
EXPWY. 36"X48"
FWY. 48"X60"

R4-2

STD. 24"X30"
EXPWY. 36"X48"
FWY. 48"X60"

R5-1

STD. 30"X30"
EXPWY. 36"X36"
SPECIAL 48"X48"

R11-2

48"X30"

R11-3A

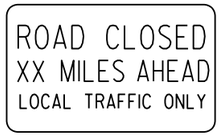

60"X30"

R11-4

60"X30"

W21-5a

STD. 36"X36"
FWY. 48"X48"

W1-1

STD. 36"X36"
FWY. 48"X48"

W1-2

STD. 36"X36"
FWY. 48"X48"

W1-3

STD. 48"X48"

W1-4

STD. 48"X48"

W1-6

STD. 48"X24"
SPECIAL 60"X30"

W1-8

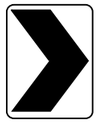

STD. 18"X24"
SPECIAL 24"X30"
EXPWY. 30"X36"
FWY. 36"X48"

W3-1

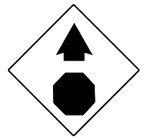

STD. 36"X36"
SPECIAL 48"X48"

W3-2

STD. 36"X36"
SPECIAL 48"X48"

W4-2

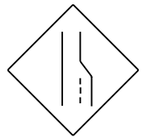

STD. 36"X36"
FWY. 48"X48"

W5-1

STD. 36"X36"
SPECIAL 48"X48"

W6-3

EXPWY. 36"X36"
SPECIAL 48"X48"

W8-7

EXPWY. 36"X36"
FWY. 48"X48"

W9-2

STD. 36"X36"
FWY. 48"X48"

W13-1

STD. 24"X24"

W20-1

STD. 48"X48"

W20-2

STD. 48"X48"

W20-3

STD. 48"X48"

W20-4

STD. 48"X48"

W20-5

STD. 48"X48"

W20-7a

STD. 36"X36"
FWY. 48"X48"

W21-2

STD. 30"X30"
SPECIAL 36"X36"

W21-5

STD. 30"X30"
SPECIAL 36"X36"

W24-1

STD. 36"X36"

W1-4b

STD. 48"X48"

R56-1

STD. 18"X18"

W8-11

STD. 36"X36"
FWY. 48"X48"

W8-9

STD. 36"X36"
FWY. 48"X48"

G20-1

60"X24"

G20-2

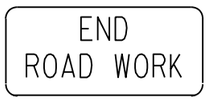

48"X24"

OM-3L OM-3R

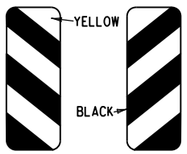

12"X36"

M4-9

STD. 30"X24"
SPECIAL 48"X36"
SPECIAL 60"X48"

M4-10

48"X18"

R55-1

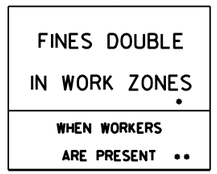

36"X60"

• USE 6" C LETTERS
•• USE 4" D LETTERS

ADVANCE DISTANCES
(XXXX)

500 FT	½ MILE
1000 FT	¾ MILE
1500 FT	1 MILE AHEAD

GENERAL NOTES:

1. ALL TRAFFIC CONTROL DEVICES USED ON ROAD CONSTRUCTION SHALL CONFORM TO THE MANUAL ON UNIFORM TRAFFIC CONTROL DEVICES, LATEST EDITION, AND TO THE STANDARD HIGHWAY SIGNS, LATEST EDITION, OR AS APPROVED BY THE FEDERAL HIGHWAY ADMINISTRATION.

2. TRAFFIC CONTROL DEVICES SHALL BE SET UP JUST BEFORE THE START OF CONSTRUCTION OPERATIONS AND SHALL BE PROPERLY MAINTAINED DURING THE TIME SUCH CONDITIONS EXIST. THEY SHALL REMAIN IN PLACE ONLY AS LONG AS NEEDED AND REMOVED THEREAFTER.

3. EXISTING SIGNS AND CONSTRUCTION SIGNS SHALL BE KEPT IN PROPER POSITION, AND BE CLEAN AND LEGIBLE AT ALL TIMES. SIGNS THAT DO NOT APPLY TO EXISTING CONDITIONS SHALL BE REMOVED. SIGNS THAT ARE DAMAGED, DEFACED, OR THAT ACCUMULATE DIRT DURING CONSTRUCTION SHALL BE CLEANED, REPAIRED, OR REPLACED.

• 4. SIGNS ARE USUALLY MOUNTED ON A SINGLE POST, ALTHOUGH THOSE WIDER THAN 36" OR LARGER THAN 10 SQ. FT. SHALL BE MOUNTED ON TWO POSTS OR ABOVE A TYPE III BARRICADE.

• 5. SIGN POSTS DIRECT BURIED IN SOIL SHALL BE 2 LB. MINIMUM CHANNEL POST OR 4"x4" WOOD POSTS. CHANNEL POSTS SHALL BE PAINTED GREEN. WOOD POSTS SHALL BE PAINTED WHITE. ALL POSTS SHALL BE NEATLY CONSTRUCTED, AND SHALL BE REPLUMBED, CLEANED, OR REPAIRED AS NEEDED FOR THE DURATION OF THE JOB. THERE SHALL NOT BE MORE THAN 2 POSTS IN A 7' PATH FOR WOOD OR CHANNEL POSTS. ANY CHANNEL POST SPLICE SHALL BE IN ACCORDANCE WITH STANDARD DRAWING TC-3.

6. POST MOUNTED SIGNS IN RURAL AREAS SHALL BE CONSTRUCTED WITH THE NEAR EDGE OF THE SIGN FROM 6 TO 12 FEET FROM THE PAVEMENT EDGE. SIGNS IN URBAN AREAS AND BARRICADE MOUNTED SIGNS SHALL BE MOUNTED A MINIMUM OF 2 FEET FROM THE PAVEMENT EDGE.

7. ALL POST AND BARRICADE MOUNTED SIGNS MOUNTED IN URBAN AREAS SHALL BE MOUNTED A MINIMUM DISTANCE OF 7' FROM THE BOTTOM OF THE SIGN TO THE ROADWAY SURFACE. ALL POST AND BARRICADE MOUNTED SIGNS MOUNTED IN RURAL AREAS SHALL BE MOUNTED A MINIMUM DISTANCE OF 7' FROM THE BOTTOM OF THE SIGN TO THE ROADWAY SURFACE, EXCEPT A MINIMUM OF 6' SHALL BE USED WHEN MOUNTING AN ADVISORY SIGN BELOW A WARNING SIGN. TEMPORARY SIGNS MAY BE MOUNTED ON PORTABLE SUPPORTS FOR INTERMEDIATE TERM STATIONARY WORK CONDITIONS. THE SIGNS MINIMUM MOUNTING HEIGHT SHALL BE 5'. RETROREFLECTIVE DEVICES SHALL BE USED. TEMPORARY SIGNS MAY BE MOUNTED ON PORTABLE SUPPORTS FOR SHORT-TERM, SHORT DURATION, AND MOBILE CONDITIONS. THEY SHALL BE NO LESS THAN ONE (1) FOOT ABOVE THE TRAVELED WAY. LONG-TERM STATIONARY SIGNS SHALL BE DIRECT BURIED IN SOIL, UNLESS CONDITIONS NECESSITATE THE USE OF PORTABLE SIGNS, OR AS APPROVED BY THE ENGINEER. CONCRETE PADS, CONCRETE OR ROCK BALLAST, OR OTHER SOLID MATERIALS SHALL NOT BE UTILIZED WITH PORTABLE SIGN SUPPORTS.

8. FLAGGERS SHALL USE REFLECTORIZED STOP-SLOW PADDLES. FLAGS MAY BE USED ONLY FOR EMERGENCY SITUATIONS.

9. MOST OF THE SIGNS SHOWN ARE ORIENTED TO THE RIGHT. HOWEVER, THIS DOES NOT PRECLUDE THE USE OF MIRROR IMAGES OF THESE SIGNS WHERE THE REVERSE ORIENTATION MIGHT BETTER CONVEY TO MOTORISTS THE PROPER DIRECTION OF MOVEMENT.

10. R55-1 SIGNS SHALL BE PLACED AT LEAST 1500' BUT NOT MORE THAN 1 MILE IN ADVANCE OF THE WORK ZONE. IF A SPEED LIMIT REDUCTION IS IN EFFECT, THE SIGN SHALL BE PLACED A MINIMUM OF 500' IN ADVANCE OF THE "REDUCED SPEED AHEAD" SIGN.

• NOTE: SUPPORTS FOR SIGNS, BARRICADES, AND VERTICAL PANELS THAT ARE DIFFERENT FROM THE REQUIREMENTS SHOWN IN NOTES 4 & 5, BUT MEET THE REQUIREMENTS OF MANUAL FOR ASSESSING SAFETY HARDWARE (MASH), WILL BE ACCEPTED. COMPLIANCE WITH THE REQUIREMENTS OF MANUAL FOR ASSESSING SAFETY HARDWARE (MASH) IS REQUIRED FOR ALL PROJECTS.

DATE	REVISION	FILMED
11-07-19	REVISED FOR MASH	
4-13-17	DELETED RSP-1 & ADDED W21-5a	
9-2-15	REVISED REDUCED SPEED LIMIT AHEAD SIGNS REVISED ROAD WORK NEXT XX MILES	
12-15-11	REVISED W24-1	
11-17-10	DELETED W8-9a & ADDED W8-9	
10-15-09	ADDED REFERENCE TO MASH & ADDED SIGN W24-1	
4-17-08	REVISED SIGN DESIGNATIONS	
11-18-04	REVISED NOTES	
10-9-03	REVISED NOTE 1	
11-16-01	REVISED NOTE 7	
9-28-00	REVISED NOTE	
11-18-98	ADDED NOTE	
6-26-97	REVISED NOTE 5	
4-03-97	REVISED NOTE 5	
10-18-96	ADDED CONTROLLED ACCESS HWY. SIGN & TO NOTE 7	
10-12-95	ADDED R55-1	
6-8-95	REVISED TO CORRECT SIGN ILLUSTRATIONS	6-8-95
2-2-95	REVISED PER PART VI, MUTCD SEPT. 3, 1993	
8-15-91	DRAWN AND PLACED IN USE	

ARKANSAS STATE HIGHWAY COMMISSION

STANDARD TRAFFIC CONTROLS FOR HIGHWAY CONSTRUCTION

STANDARD DRAWING TC-1

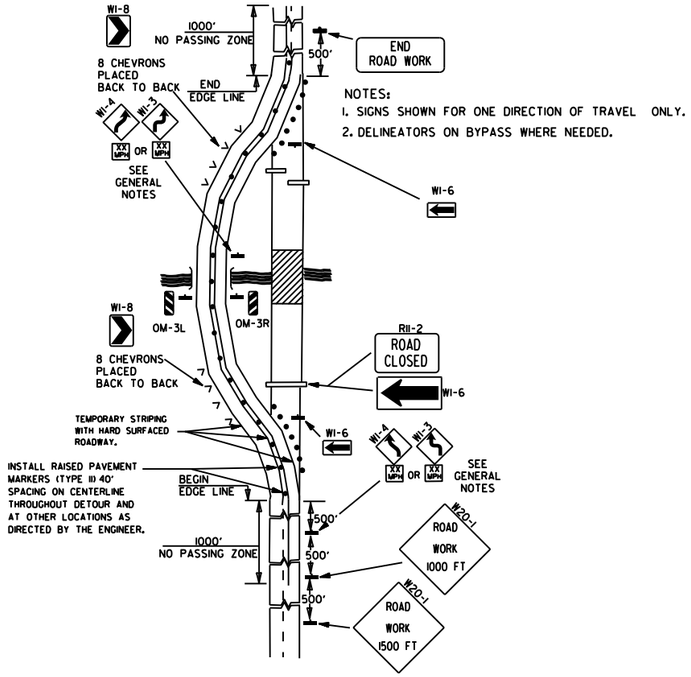

NOTES:
1. SIGNS SHOWN FOR ONE DIRECTION OF TRAVEL ONLY.
2. DELINEATORS ON BYPASS WHERE NEEDED.

(A) TYPICAL APPLICATION OF TRAFFIC CONTROL DEVICES ON A 2-LANE HIGHWAY WHERE THE ENTIRE ROADWAY IS CLOSED AND A BYPASS DETOUR IS PROVIDED.

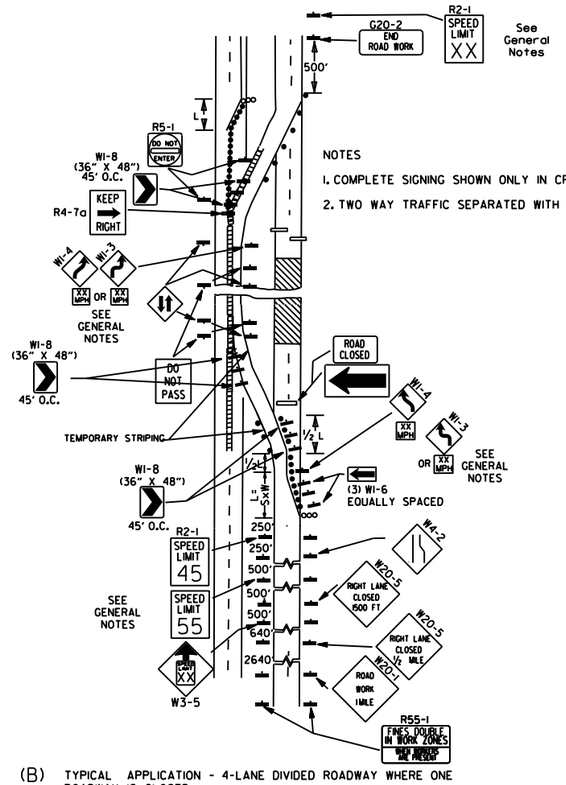

NOTES
1. COMPLETE SIGNING SHOWN ONLY IN CROSSOVER DIRECTION.
2. TWO WAY TRAFFIC SEPARATED WITH POSITIVE BARRIER.

(B) TYPICAL APPLICATION - 4-LANE DIVIDED ROADWAY WHERE ONE ROADWAY IS CLOSED.

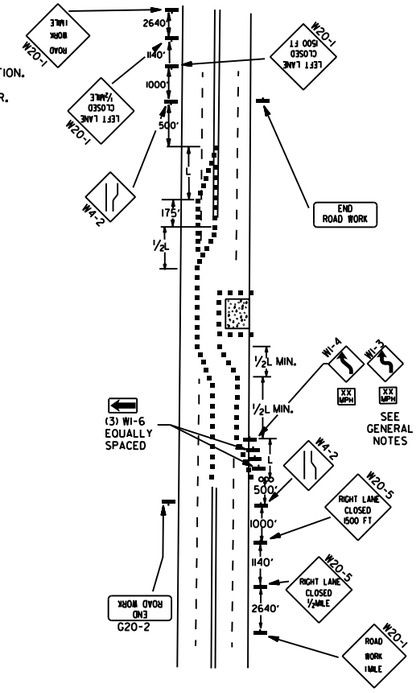

(C) TYPICAL APPLICATION - 4-LANE UNDIVIDED ROADWAY WHERE HALF OF THE ROADWAY IS CLOSED.

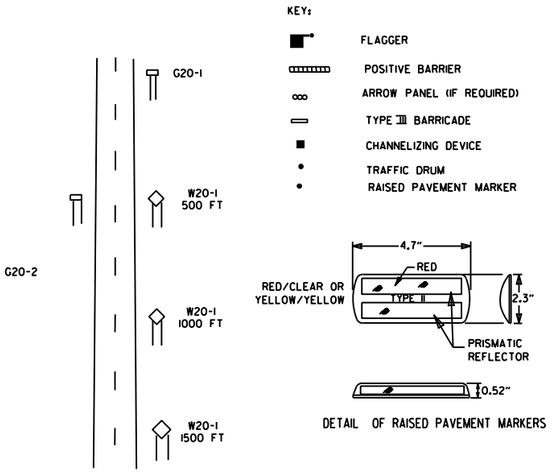

TYPICAL ADVANCE WARNING SIGN PLACEMENT

TAPER FORMULAE:

$L = SXW$ FOR SPEEDS OF 45MPH OR MORE.

$L = \frac{WS^2}{60}$ FOR SPEEDS OF 40MPH OR LESS.

WHERE:

L= MINIMUM LENGTH OF TAPER.

S= NUMERICAL VALUE OF POSTED SPEED LIMIT PRIOR TO WORK OR 85TH PERCENTILE SPEED.

W= WIDTH OF OFFSET.

GENERAL NOTES:

1. THE MAINTENANCE DIVISION SHALL CONDUCT A BALL BANK STUDY TO DETERMINE THE ADVISORY SPEED LIMIT PRIOR TO OPENING TO TRAFFIC. THE ADVISORY SPEED WILL BE POSTED ON W1-3 OR W1-4 CURVE WARNING SIGNS. USE W1-4 WHEN SPEED IS GREATER THAN 30MPH AND W1-3 WHEN 30MPH OR LESS
2. WHEN THE EXISTING SPEED LIMIT IS 55MPH AND THE PLANS REQUIRE A SPEED LIMIT OF 45MPH, THE R2-1(55) SHALL BE OMITTED AND THE W3-5 SHALL BE INSTALLED AT THAT LOCATION. ADDITIONAL R2-1 45MPH SPEED LIMIT SIGNS SHALL BE INSTALLED AT A MAXIMUM OF 1MILE INTERVALS. AT THE END OF THE WORK AREA A R2-1(XX) SHALL BE INSTALLED TO MATCH ORIGINAL SPEED LIMIT.
3. WHEN THE EXISTING SPEED LIMIT IS 65MPH AND THE PLANS REQUIRE A SPEED LIMIT OF 55MPH, THE R2-1(45) SHALL BE OMITTED. ADDITIONAL R2-1 55MPH SPEED LIMIT SIGNS SHALL BE INSTALLED AT A MAXIMUM OF 1MILE INTERVALS. AT THE END OF THE WORK AREA A R2-1(XX) SHALL BE INSTALLED TO MATCH ORIGINAL SPEED LIMIT.
4. THE MAXIMUM SPACING BETWEEN CHANNELIZING DEVICES IN A TAPER SHOULD BE APPROXIMATELY EQUAL IN FEET TO THE SPEED LIMIT. BEYOND THE TAPER, MAXIMUM SPACING SHALL BE TWO TIMES THE SPEED LIMIT, OR AS DIRECTED BY THE ENGINEER.
5. WARNING LIGHTS AND/OR FLAGS MAY BE MOUNTED TO SIGNS OR CHANNELIZING DEVICES AT NIGHT AS NEEDED.
6. PAVEMENT MARKINGS NO LONGER APPLICABLE WHICH MIGHT CREATE CONFUSION IN THE MINDS OF VEHICLE OPERATORS SHALL BE REMOVED OR OBLITERATED AS SOON AS PRACTICABLE.
7. TRAILER MOUNTED DEVICES SUCH AS ARROW PANELS AND PORTABLE CHANGEABLE MESSAGE SIGNS SHALL BE DELINEATED BY AFFIXING CONSPICUITY MATERIAL IN A CONTINUOUS LINE ON THE FACE OF THE TRAILER. WHEN PLACED ON OR ADJACENT TO THE SHOULDER AND NOT BEHIND A POSITIVE BARRIER, THESE DEVICES SHALL BE DELINEATED BY PLACING FIVE (5) TRAFFIC DRUMS, EQUALLY SPACED ALONG THE TRAFFIC SIDE OF THE DEVICE. PAYMENT FOR TRAFFIC DRUMS SHALL BE CONSIDERED INCLUDED IN THE PRICE BID FOR VARIOUS TRAILER MOUNTED DEVICES.
8. DIMENSIONS SHOWN FOR RAISED PAVEMENT MARKERS ARE TYPICAL. THE CONTRACTOR MAY SUBSTITUTE SIMILAR MARKERS WITH THE APPROVAL OF THE ENGINEER. REQUESTING APPROVAL FOR SIMILAR MARKERS MAY BE MADE BY REFERRING TO THE ARDOT QUALIFIED PRODUCTS LIST.
9. ALL TRAILER MOUNTED DEVICES SUCH AS ARROW PANELS AND PORTABLE CHANGEABLE MESSAGE SIGNS SHALL MEET THE REQUIREMENTS OF THE MANUAL FOR ASSESSING SAFETY HARDWARE (MASH).

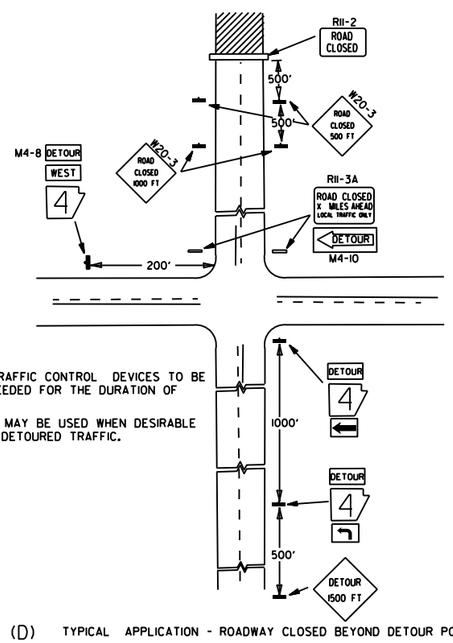

NOTES:
1. REGULATORY TRAFFIC CONTROL DEVICES TO BE MODIFIED AS NEEDED FOR THE DURATION OF THE DETOUR.
2. STREET NAMES MAY BE USED WHEN DESIRABLE FOR DIRECTING DETOURED TRAFFIC.

(D) TYPICAL APPLICATION - ROADWAY CLOSED BEYOND DETOUR POINT.

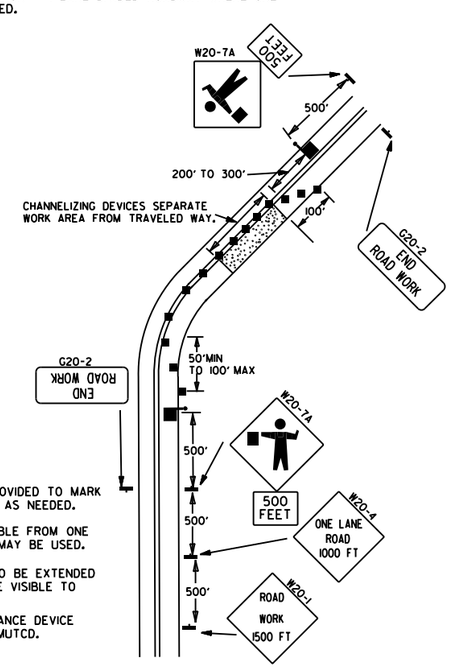

NOTES:
1. FLOOD LIGHTS SHOULD BE PROVIDED TO MARK FLAGGER STATIONS AT NIGHT AS NEEDED.
2. IF ENTIRE WORK AREA IS VISIBLE FROM ONE STATION, A SINGLE FLAGGER MAY BE USED.
3. CHANNELIZING DEVICES ARE TO BE EXTENDED TO A POINT WHERE THEY ARE VISIBLE TO APPROACHING TRAFFIC.
4. AUTOMATED FLAGGER ASSISTANCE DEVICE (AFAD) OPTIONAL. REFER TO MUTCD.

(E) TYPICAL APPLICATION OF TRAFFIC CONTROL DEVICES ON 2-LANE HIGHWAY WHERE ONE LANE IS CLOSED AND FLAGGING IS PROVIDED.

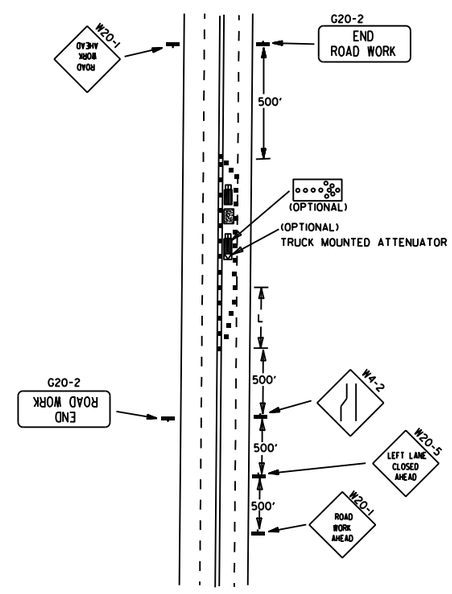

(F) TYPICAL APPLICATION - 4-LANE UNDIVIDED ROADWAY WITH INSIDE LANE CLOSED.

DATE	REVISION	FILMED
05-20-21	REVISED NOTE 7	
11-07-19	REVISED NOTE 1, ADDED NOTE 9	
9-2-15	REVISED NOTE 2, ADDED NOTE 8, REVISED DRAWING (A) & REPLACED R2-5A WITH W3-5	
9-12-13	REVISED DETAIL OF RAISED PAVEMENT MARKERS	
3-11-10	ADDED (AFAD)	
11-20-08	REVISED SIGN DESIGNATIONS	
11-18-04	ADDED GENERAL NOTE	
10-18-96	ADDED R55-1	
4-26-96	CORRECTED (c) BEHIND G20-2	
6-8-95	CORRECTED SIGN IDENT. ON W1-4A	6-8-95
2-2-95	REVISED PER PART VI, MUTCD, SEPT. 3, 1993	
8-15-91	DRAWN AND PLACED IN USE	

ARKANSAS STATE HIGHWAY COMMISSION

STANDARD TRAFFIC CONTROLS FOR HIGHWAY CONSTRUCTION

STANDARD DRAWING TC-2

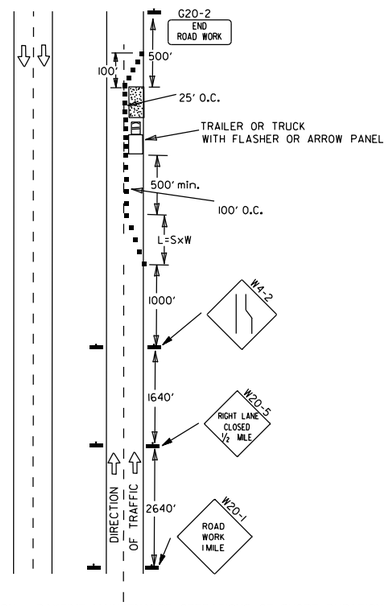

(A) TYPICAL APPLICATION - DAYTIME MAINTENANCE OPERATIONS OF SHORT DURATION ON A 4-LANE DIVIDED ROADWAY WHERE HALF OF THE ROADWAY IS CLOSED.

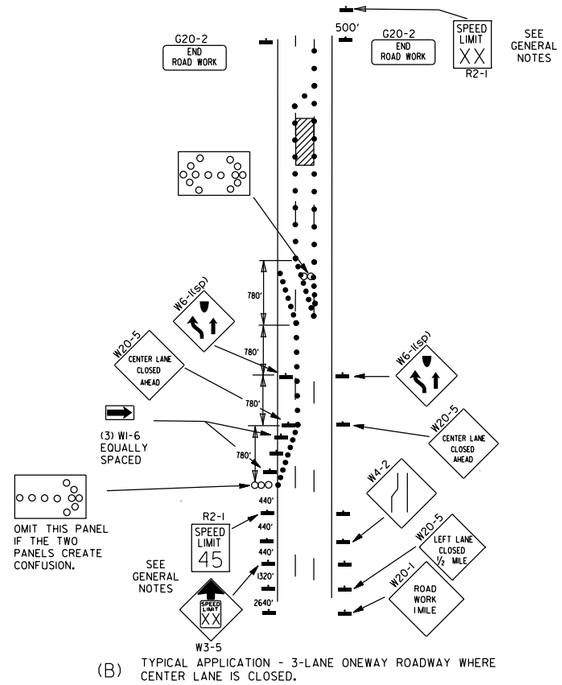

(B) TYPICAL APPLICATION - 3-LANE ONEWAY ROADWAY WHERE CENTER LANE IS CLOSED.

KEY:

- ARROW PANEL (IF REQUIRED)
- ■ CHANNELIZING DEVICE
- ● TRAFFIC DRUM

GENERAL NOTES:

1. A SPEED LIMIT REDUCTION MAY BE IMPLEMENTED ONLY WHEN DESIGNATED IN THE PLAN OR WHEN RECOMMENDED BY THE ROADWAY DESIGN DIVISION.
2. WHEN THE EXISTING SPEED LIMIT IS 55MPH AND THE PLANS REQUIRE A SPEED LIMIT OF 45MPH, THE R2-1(55) SHALL BE OMITTED AND THE W3-5 SHALL BE INSTALLED AT THAT LOCATION. ADDITIONAL R2-1 45MPH SPEED LIMIT SIGNS SHALL BE INSTALLED AT A MAXIMUM OF 1 MILE INTERVALS. AT THE END OF THE WORK AREA A R2-1(XX) SHALL BE INSTALLED TO MATCH ORIGINAL SPEED LIMIT.
3. WHEN THE EXISTING SPEED LIMIT IS 65MPH AND THE PLANS REQUIRE A SPEED LIMIT OF 55MPH, THE R2-1(45) SHALL BE OMITTED. ADDITIONAL R2-1 55MPH SPEED LIMIT SIGNS SHALL BE INSTALLED AT A MAXIMUM OF 1 MILE INTERVALS. AT THE END OF THE WORK AREA A R2-1(XX) SHALL BE INSTALLED TO MATCH ORIGINAL SPEED LIMIT.
4. THE MAXIMUM SPACING BETWEEN CHANNELIZING DEVICES IN A TAPER SHOULD BE APPROXIMATELY EQUAL IN FEET TO THE SPEED LIMIT. BEYOND THE TAPER, MAXIMUM SPACING SHALL BE TWO TIMES THE SPEED LIMIT OR AS DIRECTED BY THE ENGINEER.
5. WARNING LIGHTS AND/OR FLAGS MAY BE MOUNTED TO SIGNS OR CHANNELIZING DEVICES AT NIGHT AS NEEDED.
6. PAVEMENT MARKINGS NO LONGER APPLICABLE WHICH MIGHT CREATE CONFUSION IN THE MINDS OF VEHICLE OPERATORS SHALL BE REMOVED OR OBLITERATED AS SOON AS PRACTICABLE.
7. THE G20-1 SIGN WILL BE REQUIRED ON JOBS OF OVER TWO MILES IN LENGTH. WHEN THE LANE CLOSURE IS NOT AT THE BEGINNING OF THE PROJECT, THE G20-1 SIGN SHALL BE ERECTED 125' IN ADVANCE OF THE JOB LIMIT. ADDITIONAL W20-1 (1 MILE) SIGNS ARE NOT REQUIRED IN ADVANCE OF LANE CLOSURES THAT BEGIN INSIDE THE PROJECT LIMITS.
8. FLAGGERS SHALL USE STOP/SLOW PADDLES FOR CONTROLLING TRAFFIC THROUGH WORK ZONES. FLAGS MAY BE USED ONLY FOR EMERGENCY SITUATIONS.
9. ALL PLASTIC DRUMS AND CONES SHALL MEET THE REQUIREMENTS OF MANUAL FOR ASSESSING SAFETY HARDWARE (MASH).
10. TRAILER MOUNTED DEVICES SUCH AS ARROW PANELS AND PORTABLE CHANGEABLE MESSAGE SIGNS SHALL BE DELINEATED BY AFFIXING CONSPICUITY MATERIAL IN A CONTINUOUS LINE ON THE FACE OF THE TRAILER. WHEN PLACED ON OR ADJACENT TO THE SHOULDER AND NOT BEHIND A POSITIVE BARRIER, THESE DEVICES SHALL BE DELINEATED BY PLACING FIVE (5) TRAFFIC DRUMS, EQUALLY SPACED ALONG THE TRAFFIC SIDE OF THE DEVICE. PAYMENT FOR TRAFFIC DRUMS SHALL BE CONSIDERED INCLUDED IN THE PRICE BID FOR VARIOUS TRAILER MOUNTED DEVICES.
11. ALL TRAILER MOUNTED DEVICES SUCH AS ARROW PANELS AND PORTABLE CHANGEABLE MESSAGE SIGNS SHALL MEET THE REQUIREMENTS OF THE MANUAL FOR ASSESSING SAFETY HARDWARE (MASH).

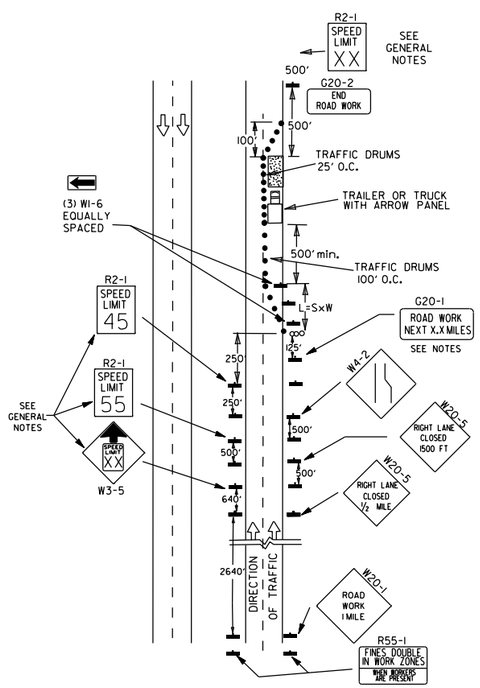

(C) TYPICAL APPLICATION - CONSTRUCTION OPERATIONS OF INTERMEDIATE TO LONG TERM DURATION ON A 4-LANE DIVIDED ROADWAY WHERE HALF OF THE ROADWAY IS CLOSED.

CHANNELIZING DEVICES

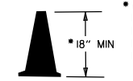

- WHEN CONES ARE USED ON FREEWAYS AND MULTI-LANE HIGHWAYS, THEY SHALL BE 28" MIN. DURING HOURS OF DARKNESS, 28" CONES SHALL BE USED ON ALL ROADWAYS, AND SHALL BE REFLECTORIZED IN ACCORDANCE WITH THE M.U.T.C.D.

CONES

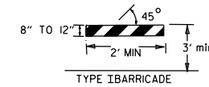

TYPE I BARRICADE

PLASTIC DRUM

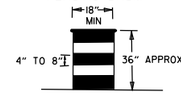

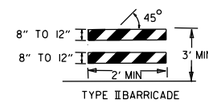

TYPE II BARRICADE

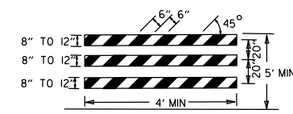

TYPE III BARRICADE

NOTE:
FOR ALL ROAD CLOSURES, THE TYPE III BARRICADES SHALL BE OF SUFFICIENT LENGTH TO EXTEND ACROSS ENTIRE ROADWAY.

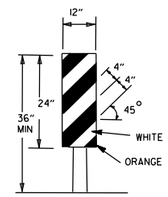

VERTICAL PANEL
VP-1R

VERTICAL PANEL PLACEMENT

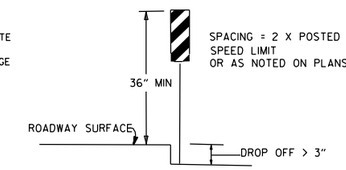

SPACING = 2 X POSTED SPEED LIMIT OR AS NOTED ON PLANS

FLAG

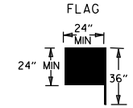

FLAG SHALL BE OF GOOD GRADE RED MATERIAL

TRAFFIC CONTROL DEVICES

NON-INTERSTATE			
VERTICAL DIFFERENTIAL	LOCATION	TRAFFIC CONTROL	
		≤ 45 MPH	> 45 MPH
≤ 1"	CENTERLINE	W8-11	W8-11
> 1" ≤ 3"	CENTERLINE	W8-11 AND CENTERLINE LANE STRIPING	W8-11 AND CENTERLINE LANE STRIPING
> 3"	CENTERLINE	STANDARD LANE CLOSURE(6)	STANDARD LANE CLOSURE(6)
≤ 3"	EDGE OF TRAVELED LANE OR EDGE OF SHOULDER	W8-9 AND TRAFFIC DRUMS(1)	W8-9 AND TRAFFIC DRUMS(1)
> 3" ≤ 6"	EDGE OF TRAVELED LANE OR EDGE OF SHOULDER	W8-17, EDGE LINE STRIPING, AND TRAFFIC DRUMS(1)	W8-17, EDGE LINE STRIPING, AND TRAFFIC DRUMS(1)
> 6" ≤ 18"	EDGE OF TRAVELED LANE OR EDGE OF SHOULDER	W8-17, EDGE LINE STRIPING, AND TRAFFIC DRUMS(1)	W8-17, EDGE LINE STRIPING, AND TRAFFIC DRUMS(2)
> 18" ≤ 24"	EDGE OF TRAVELED LANE OR EDGE OF SHOULDER	W8-17, EDGE LINE STRIPING, AND TRAFFIC DRUMS(1)	A STABILIZED WEDGE, W8-17, EDGE LINE STRIPING AND TRAFFIC DRUMS(3)
> 24"	EDGE OF TRAVELED LANE OR EDGE OF SHOULDER	PRECAST CONCRETE BARRIER(4) & EDGE LINES	PRECAST CONCRETE BARRIER(4) & EDGE LINES

INTERSTATE		
VERTICAL DIFFERENTIAL	LOCATION	TRAFFIC CONTROL
≤ 3"	CENTERLINE	W8-11 AND LANE STRIPING
≤ 3"	EDGE OF TRAVELED LANE OR EDGE OF SHOULDER	W8-9, EDGE LINE STRIPING, AND TRAFFIC DRUMS(2)
> 3" ≤ 6"	EDGE OF TRAVELED LANE OR EDGE OF SHOULDER	W8-17, EDGE LINE STRIPING, AND TRAFFIC DRUMS(2)
> 6"	EDGE OF TRAVELED LANE OR EDGE OF SHOULDER	PRECAST CONCRETE BARRIER & EDGE LINES

INTERSTATE AND NON-INTERSTATE		
FORESLOPE	HEIGHT	TRAFFIC CONTROL
1:1	> 2 FT	PRECAST CONCRETE BARRIER
2:1	≤ 5 FT	TRAFFIC DRUMS
2:1	> 5 FT	PRECAST CONCRETE BARRIER
Flatter than 2:1	N/A	TRAFFIC DRUMS

GENERAL NOTES:

1. WHEN THE SHOULDER AREA IS USED AS PART OF THE TRAVELED LANE AND THERE IS INSUFFICIENT WIDTH TO PLACE TRAFFIC DRUMS ON THE REMAINING SHOULDER WIDTH, THEN VERTICAL PANELS SHALL BE USED.
2. WHEN THERE IS INSUFFICIENT WIDTH TO PLACE TRAFFIC DRUMS ON THE REMAINING SHOULDER WIDTH, A STABILIZED WEDGE SHALL BE USED.
3. PRECAST CONCRETE BARRIER WALL CAN BE USED IN LIEU OF A STABILIZED WEDGE, W8-17 SIGN, EDGE LINE STRIPING, AND TRAFFIC DRUMS, IF AND WHERE DIRECTED BY THE ENGINEER.
4. A STABILIZED WEDGE, W8-17 SIGN, EDGE LINE STRIPING, AND TRAFFIC DRUMS CAN BE USED IN LIEU OF PRECAST CONCRETE BARRIER WALL, IF AND WHERE DIRECTED BY THE ENGINEER.
5. W21-5, W21-5a, AND/OR W21-5b SIGNS SHALL BE USED WHERE THE ROADWAY IS UNOBSTRUCTED IF AND WHERE DIRECTED BY THE ENGINEER.
6. TIME LIMITATIONS MUST CONFORM TO SECTION 603 OF THE STANDARD SPECIFICATIONS FOR HIGHWAY CONSTRUCTION (CURRENT EDITION).

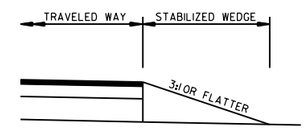

STABILIZED WEDGE

NOTE:
MATERIALS FOR THE STABILIZED WEDGE SHALL MEET THE REQUIREMENTS PROVIDED IN SECTION 603.02 OF THE STANDARD SPECIFICATIONS.

STOP SLOW PADDLE

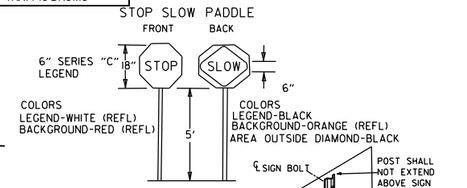

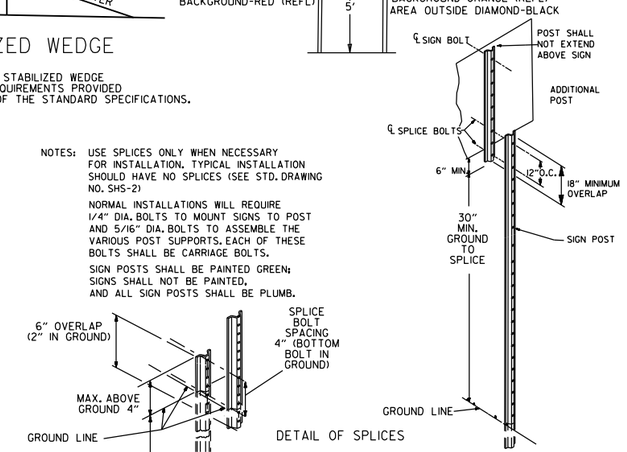

NOTES: USE SPLICES ONLY WHEN NECESSARY FOR INSTALLATION. TYPICAL INSTALLATION SHOULD HAVE NO SPLICES (SEE STD. DRAWING NO. SHS-21)

NORMAL INSTALLATIONS WILL REQUIRE 1/4" DIA. BOLTS TO MOUNT SIGNS TO POST AND 5/16" DIA. BOLTS TO ASSEMBLE THE VARIOUS POST SUPPORTS. EACH OF THESE BOLTS SHALL BE CARRIAGE BOLTS.

SIGN POSTS SHALL BE PAINTED GREEN; SIGNS SHALL NOT BE PAINTED, AND ALL SIGN POSTS SHALL BE PLUMB.

DETAIL OF SPLICES

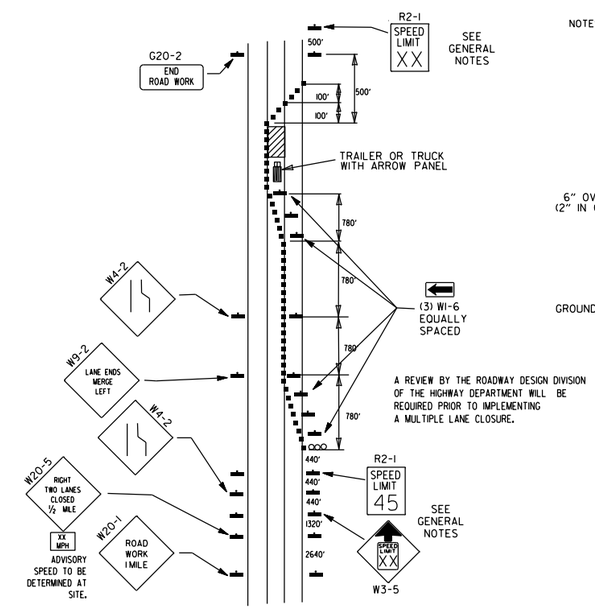

A REVIEW BY THE ROADWAY DESIGN DIVISION OF THE HIGHWAY DEPARTMENT WILL BE REQUIRED PRIOR TO IMPLEMENTING A MULTIPLE LANE CLOSURE.

(D) TYPICAL APPLICATION - CLOSING MULTIPLE LANES OF A MULTILANE HIGHWAY.

DATE	REVISION	FILMED
08-12-21	REVISED TRAFFIC CONTROL DEVICES AND NOTES	
05-20-21	REVISED NOTE 10	
2-27-20	REVISED TRAFFIC CONTROL DEVICES DETAILS	
11-07-19	REVISED NOTE 9, ADDED NOTE 11	
7-25-19	REVISED TRAFFIC CONTROL DEVICES DETAILS	
9-2-15	REVISED NOTE 2 & REPLACED R2-5A WITH W3-5	
10-15-09	ADDED REFERENCE TO MASH	
11-20-08	REVISED SIGN DESIGNATIONS	
11-18-04	ADDED NOTE	
10-1-98	ADDED NOTE	
4-03-97	ADDED (SP) TO W6-1& REVISED TRAFFIC CONTROL DEVICES NOTE	
10-18-96	ADDED R55-1	
10-12-95	MOVED UPPER SPLICE	
6-8-95	REVISED SPLICE DETAIL, TEXT	6-8-95
2-2-95	REVISED PER PART VI, MUTCD, SEPT. 3, 1993	
8-15-91	DRAWN AND PLACED IN USE	

ARKANSAS STATE HIGHWAY COMMISSION

STANDARD TRAFFIC CONTROLS FOR HIGHWAY CONSTRUCTION

STANDARD DRAWING TC-3

GENERAL NOTES

INSTALL A MINIMUM OF 2 UPSLOPE STAKES AND 4 DOWNSLOPE STAKES AT AN ANGLE TO WEDGE WATTLE TO BOTTOM OF DITCH.

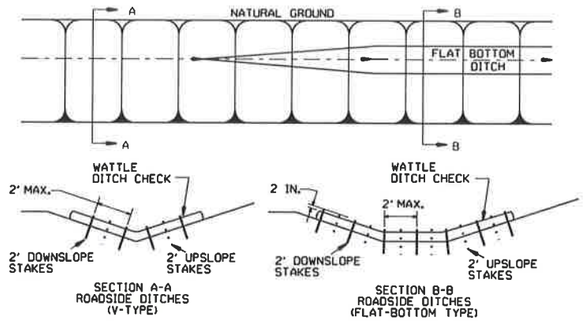

WATTLE DITCH CHECK (E-1)

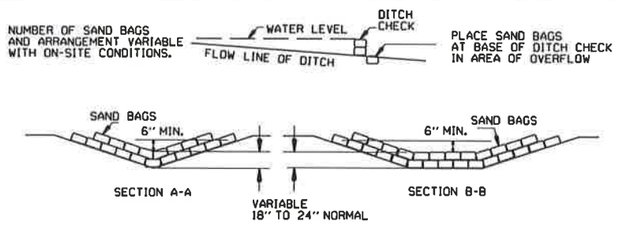

SAND BAG DITCH CHECK (E-5)

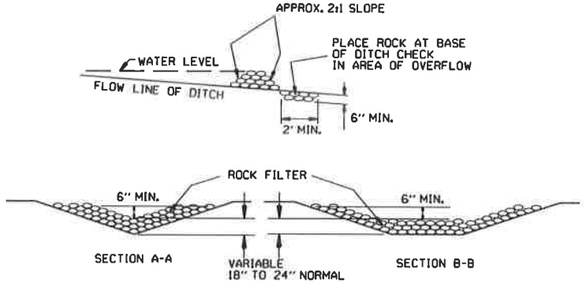

ROCK DITCH CHECK (E-6)

GENERAL NOTES

GEOTEXTILE FABRIC (TYPE 4) IN ACCORDANCE WITH SECTION 625

GEOTEXTILE FABRIC SHALL BE SPLICED TOGETHER WITH A SEWN SEAM ONLY AT A SUPPORT POST OR TWO SECTIONS OF FENCE MAY BE OVERLAPPED INSTEAD. PAYMENT OF ADDITIONAL MATERIAL FOR OVERLAP WILL NOT BE MADE.

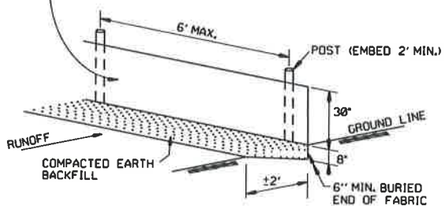

SILT FENCE (E-11)

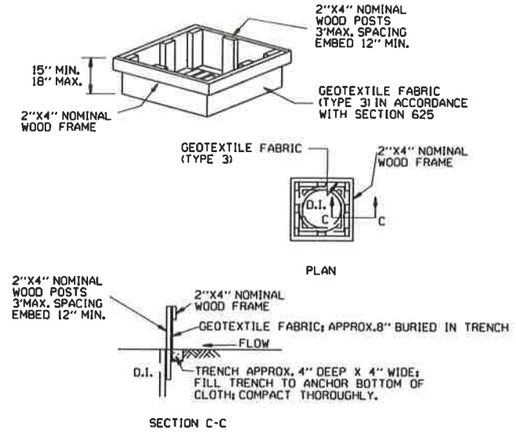

DROP INLET SILT FENCE (E-7)

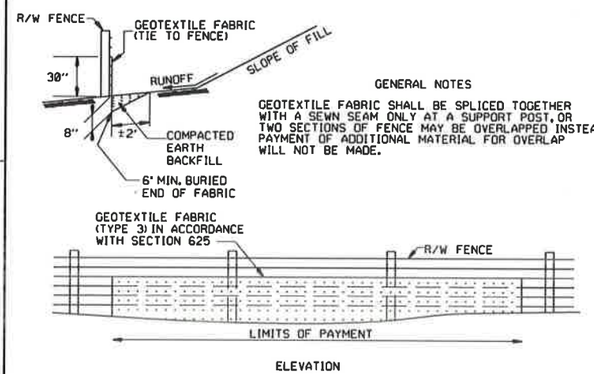

GENERAL NOTES

GEOTEXTILE FABRIC SHALL BE SPLICED TOGETHER WITH A SEWN SEAM ONLY AT A SUPPORT POST, OR TWO SECTIONS OF FENCE MAY BE OVERLAPPED INSTEAD. PAYMENT OF ADDITIONAL MATERIAL FOR OVERLAP WILL NOT BE MADE.

SILT FENCE ON R/W FENCE (E-4)

GENERAL NOTES

1. STRAW BALES SHALL BE INSTALLED SO THAT THE BINDINGS ARE ORIENTED AROUND THE SIDES RATHER THAN ALONG THE TOPS AND BOTTOMS OF THE BALES. THE BALES SHALL BE A MINIMUM OF 30 INCHES IN LENGTH.

2. NO GAPS SHALL BE LEFT BETWEEN BALES.

3. BALED STRAW FILTER BARRIERS COMPLETED AND ACCEPTED WILL BE MEASURED BY THE BALE IN PLACE AS AUTHORIZED BY THE ENGINEER AND WILL BE PAID FOR AT THE CONTRACT UNIT PRICE BID PER BALE FOR BALED STRAW DITCH CHECKS.

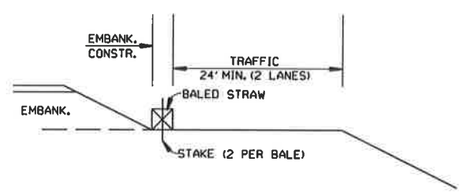

BALED STRAW FILTER BARRIER (E-2)

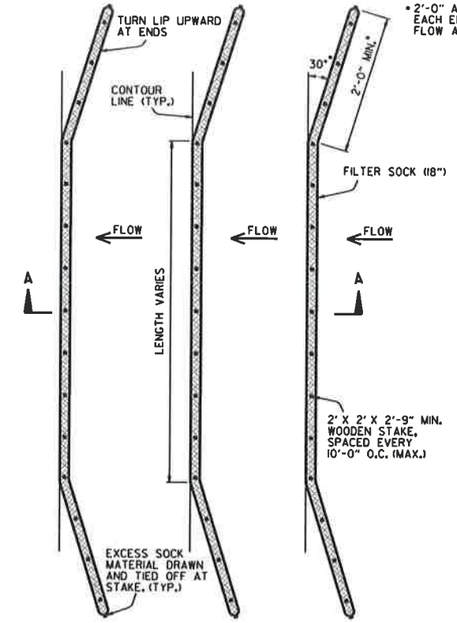

PLAN VIEW
N.T.S.

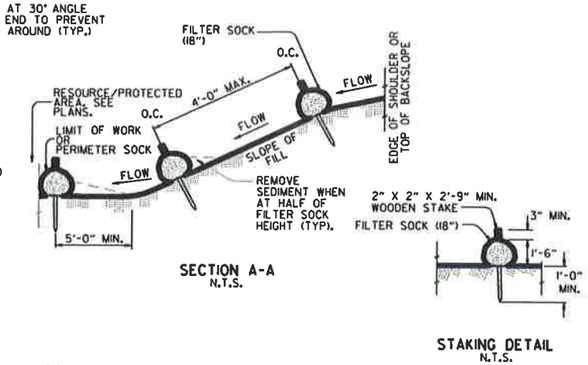

STAKING DETAIL
N.T.S.

NOTES:

1. FILTER SOCKS CAN BE PLACED AT THE TOP, ON THE FACE, AND AT THE TOE OF SLOPES AS SEDIMENT-TRAPPING DEVICES FOR SHEET FLOW RUNOFF.

2. FILTER SOCKS ARE TYPICALLY SUPPLIED AND INSTALLED WITH 18 INCH DIAMETERS. DIAMETER TOLERANCE IS 2 INCHES, AS FILTER SOCKS TEND TO FLATTEN OUT WHEN PLACED.

3. STEEL POSTS MAY BE USED AND SHALL BE ROLLED FROM HIGH CARBON STEEL AND HAVE A MINIMUM OF 1.25 LB./FT. POSTS SHALL BE HOT-DIPPED GALVANIZED OR PAINTED WITH HIGH-GRADE WEATHER RESISTANT BROWN OR BLACK STEEL PAINT. STEEL POSTS SHALL BE EQUIPPED WITH ANCHOR PLATE HAVING A MINIMUM AREA OF 14 SQUARE INCHES. POSTS SHALL BE STUDDED, EMBOSSED, OR PUNCHED. POSTS AND ANCHOR PLATES SHALL CONFORM TO THE REQUIREMENTS OF ASTM A702. NO ADDITIONAL PAYMENT WILL BE PROVIDED FOR STEEL POSTS, BUT PRICE WILL BE CONSIDERED SUBIDIARY TO "FILTER SOCK (18")."

4. FILTER SOCKS MAY BE UP TO 250 FEET LONG. WHEN USED ON LONG SLOPES, FILTER SOCKS MAY BE JOINTED OR STAGGERED AS SHOWN IN DETAILS.

5. INSPECT FILTER SOCKS AFTER EACH RUNOFF EVENT. REMOVE AND REPLACE IF SIGNS OF UNDERCUTTING OR DOWNSTREAM RILLS ARE OBSERVED.

FILTER SOCK ALONG SLOPE (E-3)

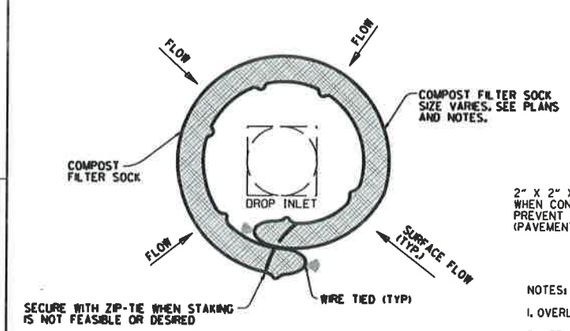

DROP INLET PLAN VIEW
N.T.S.

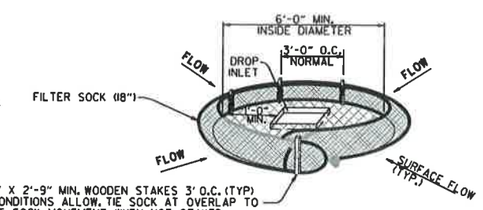

DROP INLET PERSPECTIVE VIEW
N.T.S.

NOTES:

1. OVERLAP ENDS OF SOCK (1' MIN. 3' MAX.).

2. USE 18" DIA. SOCK IN NON-TRAFFIC AREAS OR AREAS WHERE SAFETY IS NOT A CONCERN.

COMPOST FILTER SOCK DROP INLET PROTECTION (E-13)

DATE	REVISION	FILMED
11-16-17	ADDED FILTER SOCK E-3 AND E-13	
12-15-11	DELETED BALED STRAW DITCH CHECK & ADDED WATTLE DITCH CHECK	
11-18-98	ADDED NOTES	
07-02-98	ADDED BALED STRAW FILTER BARRIER (E-2)	
07-20-95	REVISED SILT FENCE E-4 AND E-11	7-20-95
07-15-94	REV. E-4 & E-11 MIN. 13" BURIED END OF FABRIC	
06-02-94	REVISED E-1,4,7 & 11; DELETED E-2 & 3	6-2-94
04-01-93	REDRAWN	
10-01-92	REDRAWN	
08-02-76	ISSUED R.D.M.	298-7-28-76

ARKANSAS STATE HIGHWAY COMMISSION

TEMPORARY EROSION CONTROL DEVICES

STANDARD DRAWING TEC-1

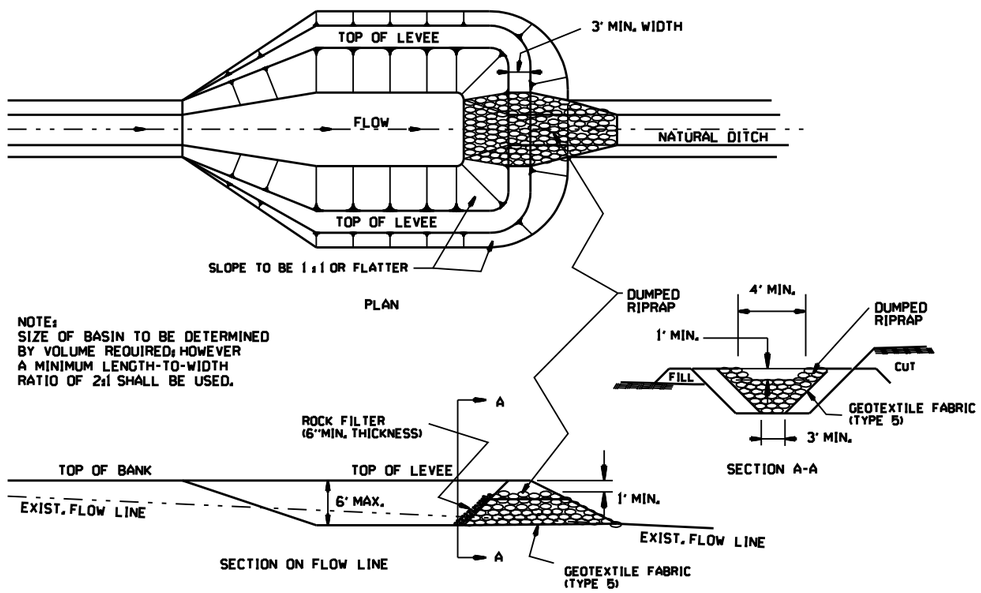

NOTE:
SIZE OF BASIN TO BE DETERMINED BY VOLUME REQUIRED; HOWEVER A MINIMUM LENGTH-TO-WIDTH RATIO OF 2:1 SHALL BE USED.

SEDIMENT BASIN WITH RIPRAP OUTLET (E-9)

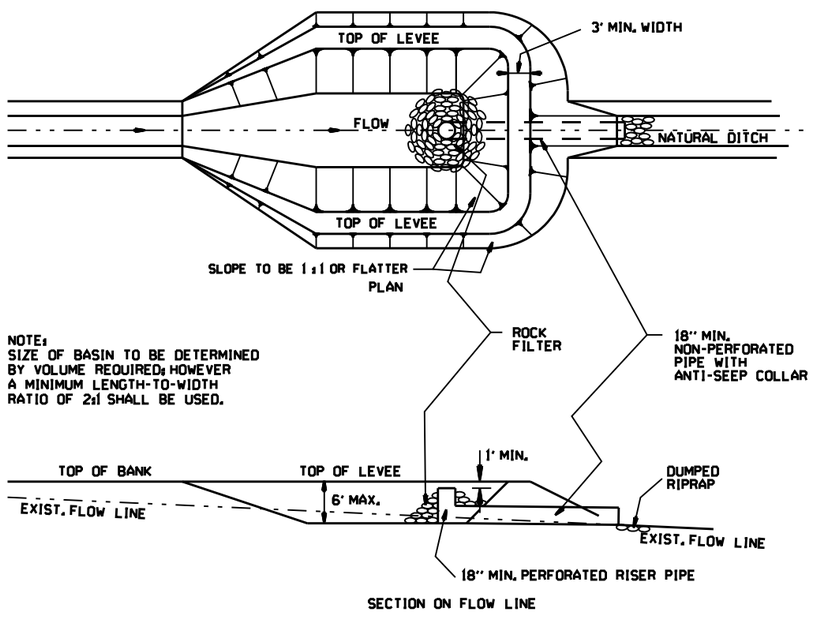

NOTE:
SIZE OF BASIN TO BE DETERMINED BY VOLUME REQUIRED; HOWEVER A MINIMUM LENGTH-TO-WIDTH RATIO OF 2:1 SHALL BE USED.

SEDIMENT BASIN WITH PIPE OUTLET (E-10)

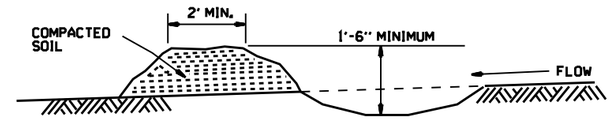

DIVERSION DITCH (E-8)

NOTE:
A T-SECTION SHALL BE USED AT THE INLET FOR TWO-DIRECTIONAL FLOW.
AN ELBOW SHALL BE USED FOR ONE-DIRECTIONAL FLOW.

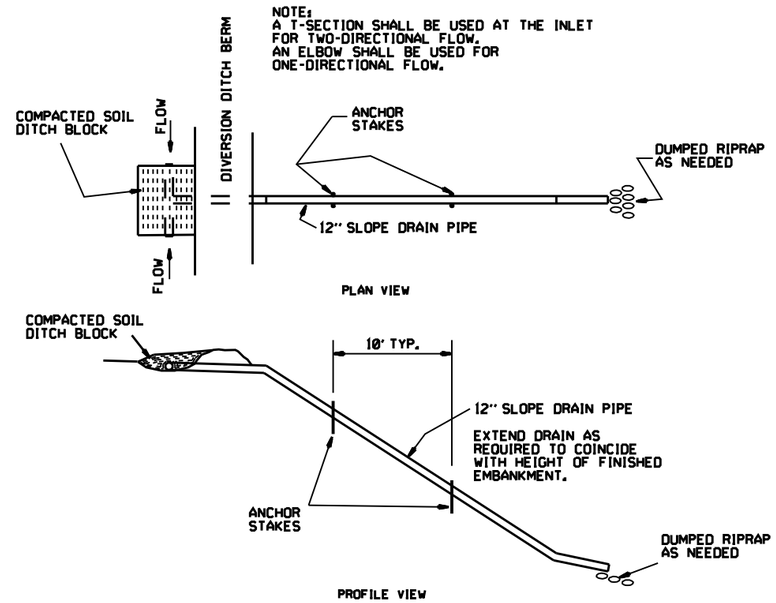

SLOPE DRAIN (E-12)

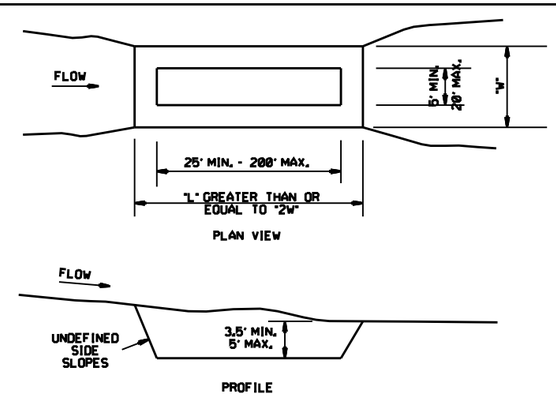

SEDIMENT BASIN (E-14)

DATE	REVISION	FILMED
6-2-94	Revised E-8 & E-12; Added E-14 & Deleted E-13	
4-1-93	ISSUED	

ARKANSAS STATE HIGHWAY COMMISSION

TEMPORARY EROSION CONTROL DEVICES

STANDARD DRAWING TEC-2

CLEARING AND GRUBBING

CONSTRUCTION SEQUENCE

1. PLACE PERIMETER CONTROLS (I.E. SILT FENCES , DIVERSION DITCHES, SEDIMENT BASINS, ETC.)
2. PERFORM CLEARING AND GRUBBING OPERATION.

EXCAVATION

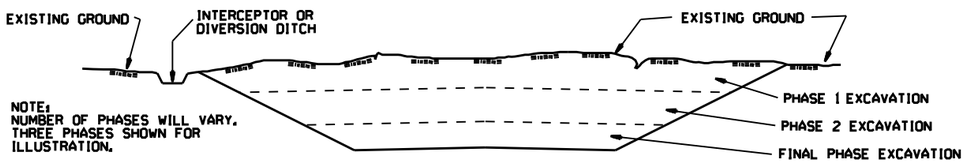

GENERAL NOTE

ALL CUT SLOPES SHALL BE DRESSED, PREPARED, SEEDED, AND MULCHED AS THE WORK PROGRESSES. SLOPES SHALL BE EXCAVATED AND STABILIZED IN EQUAL INCREMENTS NOT TO EXCEED 25 FEET, MEASURED VERTICALLY.

CONSTRUCTION SEQUENCE

1. EXCAVATE AND STABILIZE INTERCEPTOR AND/OR DIVERSION DITCHES.
2. PERFORM PHASE 1 EXCAVATION. PLACE PERMANENT OR TEMPORARY SEEDING.
3. PERFORM PHASE 2 EXCAVATION. PLACE PERMANENT OR TEMPORARY SEEDING.
4. PERFORM FINAL PHASE OF EXCAVATION. PLACE PERMANENT OR TEMPORARY SEEDING. STABILIZE DITCHES. CONSTRUCT DITCH CHECKS, DIVERSION DITCHES, SEDIMENT BASINS, OR OTHER EROSION CONTROL DEVICES AS REQUIRED.

EMBANKMENT

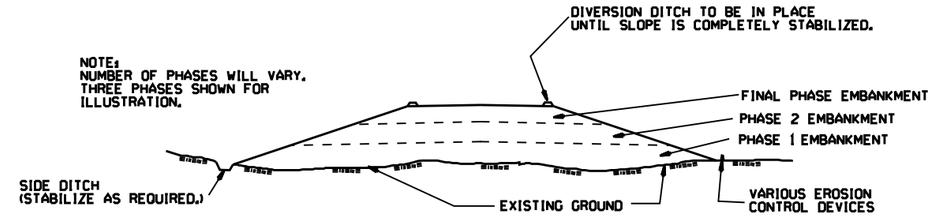

GENERAL NOTE

ALL EMBANKMENT SLOPES SHALL BE DRESSED, PREPARED, SEEDED, AND MULCHED AS THE WORK PROGRESSES. SLOPES SHALL BE CONSTRUCTED AND STABILIZED IN EQUAL INCREMENTS NOT TO EXCEED 25 FEET, MEASURED VERTICALLY.

CONSTRUCTION SEQUENCE

1. CONSTRUCT DIVERSION DITCHES, DITCH CHECKS, SEDIMENT BASINS, SILT FENCES, OR OTHER EROSION CONTROL DEVICES AS SPECIFIED.
2. PLACE PHASE 1 EMBANKMENT WITH PERMANENT OR TEMPORARY SEEDING. PROVIDE DIVERSION DITCHES AND SLOPE DRAINS IF EMBANKMENT CONSTRUCTION IS TO BE TEMPORARILY ABANDONED FOR A PERIOD OF GREATER THAN 21 DAYS.
3. PLACE PHASE 2 EMBANKMENT WITH PERMANENT OR TEMPORARY SEEDING. PROVIDE DIVERSION DITCHES AND SLOPE DRAINS IF EMBANKMENT CONSTRUCTION IS TO BE TEMPORARILY ABANDONED FOR A PERIOD OF GREATER THAN 21 DAYS.
4. PLACE FINAL PHASE OF EMBANKMENT WITH PERMANENT OR TEMPORARY SEEDING. PLACE DIVERSION DITCHES AND SLOPE DRAINS AND MAINTAIN UNTIL ENTIRE SLOPE IS STABILIZED.

DATE	REVISION	FILMED
11-03-94	CORRECTED SPELLING	
6-2-94	Drawn & Issued	6-2-94

ARKANSAS STATE HIGHWAY COMMISSION

TEMPORARY EROSION CONTROL DEVICES

STANDARD DRAWING TEC-3

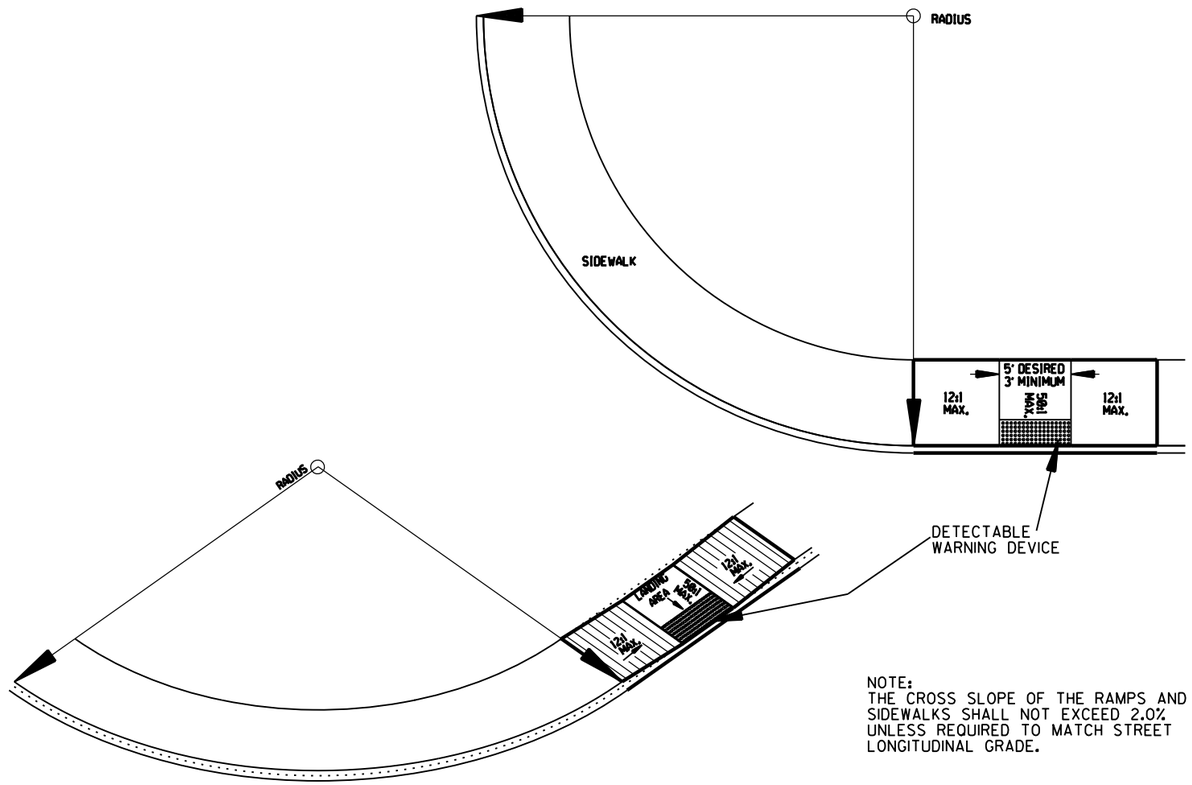

NOTE:
THE CROSS SLOPE OF THE RAMPS AND SIDEWALKS SHALL NOT EXCEED 2.0% UNLESS REQUIRED TO MATCH STREET LONGITUDINAL GRADE.

TYPE 5 RAMP

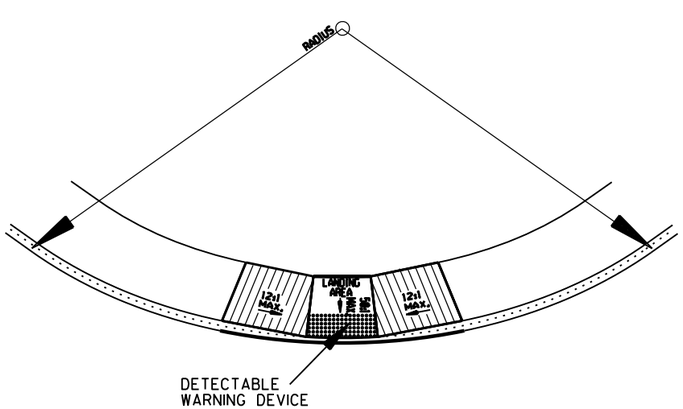

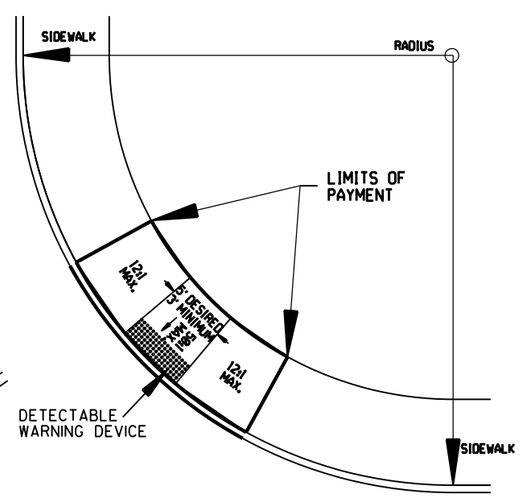

TYPE 6 RAMP

GENERAL NOTES FOR DETECTABLE WARNING DEVICES

THE DETECTABLE WARNING DEVICE SHALL BE LOCATED SO THAT THE NEAREST EDGE OF THE DEVICE IS 6 TO 8 INCHES FROM THE FACE OF THE CURB.
TRUNCATED DOMES IN THE DETECTABLE WARNING SURFACE SHALL MEET THE REQUIREMENTS OF THE GEOMETRIC CONFIGURATION SHOWN.
DOMES SHALL BE ALIGNED ON A SQUARE GRID IN THE PREDOMINANT DIRECTION OF TRAVEL TO PERMIT WHEELS TO ROLL BETWEEN DOMES.
DETECTABLE WARNING DEVICE SHALL BE 24 INCHES IN THE DIRECTION OF TRAVEL AND EXTEND THE FULL WIDTH OF THE CURB RAMP OR FLUSH SURFACE.
DETECTABLE WARNING DEVICE SHALL BE ON THE ARDOT QUALIFIED PRODUCTS LIST FOR CAST-IN-PLACE TACTILE PANELS (ADA DETECTABLE WARNING).

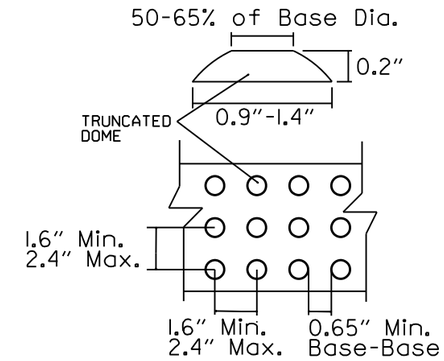

DETECTABLE WARNING DEVICE DETAIL

GENERAL NOTES:

IN ALTERATIONS WHEELCHAIR RAMPS ARE TO BE PROVIDED AT CURBED STREET INTERSECTIONS WITH PEDESTRIAN TRAFFIC AND MID-BLOCK CROSSWALK LOCATIONS.

THE LENGTH OF THE RAMP SHALL BE SUCH THAT THE SLOPE DOES NOT EXCEED 12:1. THE SURFACE TEXTURE OF THE RAMP SHALL CONFORM TO A CLASS 6 FINISH ACCORDING TO SECTION 802.19.

THE NORMAL GUTTER GRADE SHALL BE MAINTAINED THROUGH THE AREA OF THE RAMP.
ALL PAVEMENT MARKINGS SHALL BE IN ACCORDANCE WITH THE LATEST EDITION OF THE MANUAL OF UNIFORM TRAFFIC CONTROL DEVICES PUBLISHED BY THE FEDERAL HIGHWAY ADMINISTRATION.
THE MINIMUM THICKNESS OF THE RAMP, WALK, & LANDING SHALL BE 4".
THE MINIMUM WIDTH OF THE RAMPS SHALL BE THE EXISTING WALK WIDTH OR 36", WHICHEVER IS GREATER.
MINOR MODIFICATIONS OF THESE DETAILS, AS APPPROVED BY THE ENGINEER, MAY BE MADE TO ADJUST TO LOCAL CONDITIONS.

RAMP SELECTION CRITERIA

FIRST CHOICE	TYPE 1	CORNER LOCATIONS WITH THE WALK ADJACENT TO THE CURB (BOTH NEW CONSTRUCTION AND ALTERATIONS).
	TYPE 2	CORNER LOCATIONS WITH THE WALK OFFSET FROM THE CURB A DISTANCE INSUFFICIENT TO ALLOW THE REQUIRED RAMP SLOPE (BOTH NEW CONSTRUCTION AND ALTERATIONS).
	TYPE 3	CORNER LOCATIONS WITH THE WALK OFFSET FROM THE CURB A DISTANCE SUFFICIENT TO ALLOW THE REQUIRED RAMP SLOPE (BOTH NEW CONSTRUCTION AND ALTERATIONS).
	TYPE 4	TANGENT LOCATIONS (BOTH NEW CONSTRUCTION AND ALTERATIONS).
SECOND CHOICE	TYPE 5	TANGENT LOCATIONS (ALTERATIONS ONLY).
THIRD CHOICE	TYPE 6	CORNER LOCATIONS (ALTERATIONS ONLY). THIS RAMP MAY BE USED ONLY IF THE TYPE 5 RAMPS CANNOT BE PLACED AT THE ENDS OF THE RADIUS.
FOURTH CHOICE		IF SITE CONSTRAINTS PREVENT THE CONSTRUCTION OF ANY OF THE TYPES LISTED, THEN AND ONLY THEN CAN THE 12:1 MAX. SLOPE ON THE RAMP BE EXCEEDED TO PROVIDE ACCESS TO THE STREET LEVEL (ALTERATIONS ONLY). THE SLOPE CAN BE STEEPENED TO A 10:1 MAX. FOR A MAX. LENGTH OF 5' OR A 8:1 MAX. FOR A MAX. LENGTH OF 2'. SLOPES STEEPER THAN 8:1 ARE NOT ALLOWED UNDER ANY CIRCUMSTANCES.

NOTE: IN ALTERATIONS, THE SELECTION OF THE TYPE OF WHEELCHAIR RAMP TO BE CONSTRUCTED SHALL BE BASED ON THE AMOUNT OF RIGHT-OF-WAY AVAILABLE, AND ON THE PRESENCE OF OTHER SITE CONSTRAINTS (UTILITIES, BUILDINGS, ETC.). THE TABLE ABOVE LISTS THE ORDER IN WHICH THE RAMPS ARE TO BE CONSIDERED.

AN ALTERATION IS DEFINED AS A PROJECT THAT CHANGES OR AFFECTS THE USE OF A PEDESTRIAN PATHWAY (OVERLAYS, SIGNALIZATION PROJECTS, ETC.) BUT DOES NOT REQUIRE THE PURCHASE OF ADDITIONAL RIGHT-OF-WAY. ALL PROJECTS THAT REQUIRE THE PURCHASE OF ADDITIONAL RIGHT-OF-WAY WILL USUALLY BE CONSIDERED NEW CONSTRUCTION FOR THE PURPOSES OF THE CHART ABOVE.

DATE	REVISION	DATE FILM
10-9-03	REVISED GENERAL NOTES & ADDED NOTE.	
4-10-03	REVISED DETECTABLE WARNING DEVICE DETAIL	
8-22-02	ADDED DETECTABLE WARNING DEVICES DETAILS	
11-18-98	REV. FOURTH CHOICE NOTE	
8-12-98	REVISED TEXTURE	
7-02-98	ISSUED	

ARKANSAS STATE HIGHWAY COMMISSION

WHEELCHAIR RAMPS
ALTERATIONS ONLY

STANDARD DRAWING WR-2