DATE REVISED	DATE FILMED	DATE REVISED	DATE FILMED	FED.RD. DIST.NO.	STATE	FED.AID PROJ.NO.	SHEET NO.	TOTAL SHEETS
				6	ARK.			
				JOB NO.		070513	1	109
				(2)	I-30 STR. & APPRS. (HWY. 51) (S)			

ARKANSAS DEPARTMENT OF TRANSPORTATION
CONSTRUCTION PLANS FOR STATE HIGHWAY

I-30 STR. & APPRS. (HWY. 51) (S)

CLARK COUNTY

ROUTE 51 SECTION 1

JOB 070513

FED. AID PROJ. NHPP-0010(48)

NOT TO SCALE

PROJECT LOCATION

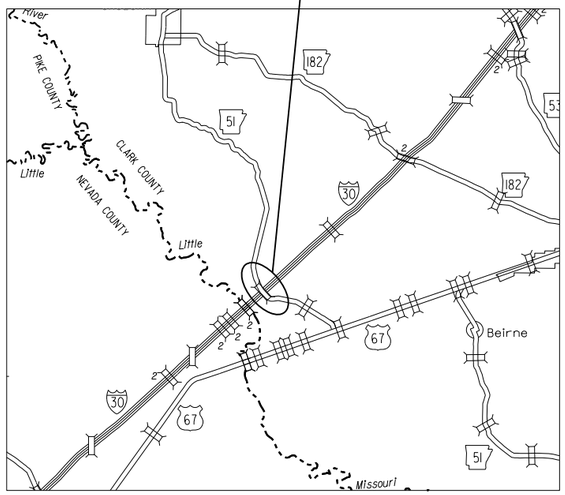

VICINITY MAP

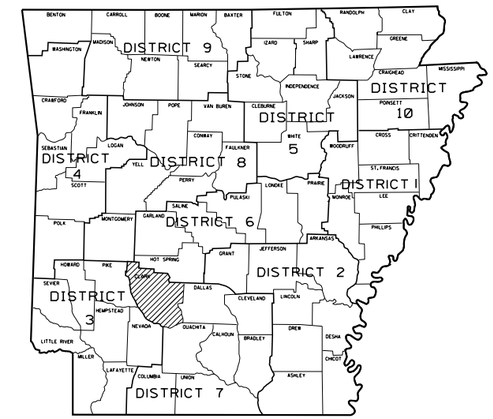

ARKANSAS HIGHWAY DISTRICT 7

BRIDGE CONSTRUCTION DATA

(1) STA. 116+98.92 BRIDGE END
BRIDGE NO. 07582 OVER I-30
200'-0" CONT. PLATE GIRDER UNIT (100'-100')
30'-0" CLEAR ROADWAY
202'-2" BRIDGE LENGTH
STA. 119+01.08 BRIDGE END

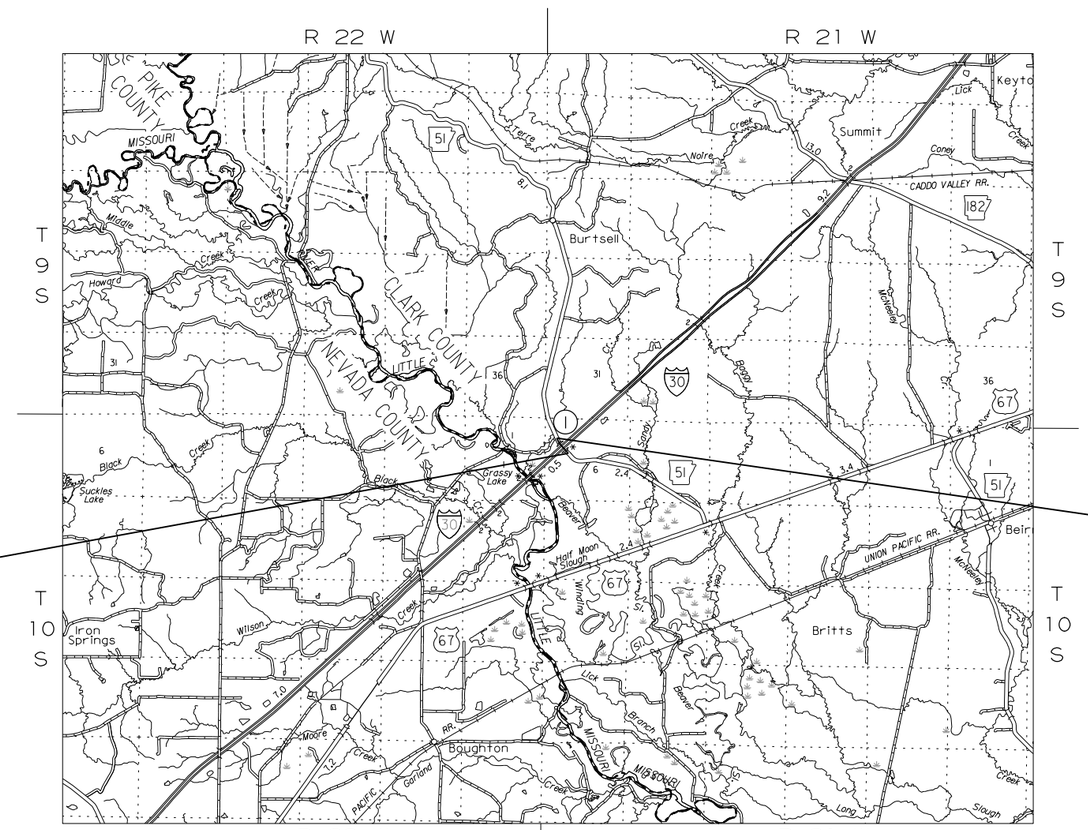

STA. 108+00.00
BEGIN JOB 070513
L.M. 1.98

STA. 128+50.00
END JOB 070513

DESIGN TRAFFIC DATA

DESIGN YEAR	2042
2022 ADT	1,400
2042 ADT	1,700
2042 DHV	187
DIRECTIONAL DISTRIBUTION	60%
TRUCKS	4%
DESIGN SPEED	50 MPH

N

PROJECT COORDINATES

	BEGIN	MID-POINT	END
LATITUDE	N 33°54'05"	N 33°54'13"	N 33°54'22"
LONGITUDE	W 93°17'40"	W 93°17'47"	W 93°17'54"
STATION	108+00.00	118+25.00	128+50.00

GROSS LENGTH OF PROJECT	2050.00 FEET	OR 0.388 MILES
NET LENGTH OF ROADWAY	1847.84 FEET	OR 0.350 MILES
NET LENGTH OF BRIDGES	202.16 FEET	OR 0.038 MILES
NET LENGTH OF PROJECT	2050.00 FEET	OR 0.388 MILES

CERTIFICATE OF AUTHORIZATION
GARVER LLC
No. 766
ARKANSAS ENGINEER

STATE OF ARKANSAS
LICENSED PROFESSIONAL ENGINEER
No. 13422
JOHN F. CANTABERY

DIGITALLY SIGNED 9/2/22

DLTackett 9/2/2022 4:23:59 PM
WORKSPACE: AHTD
L:\2017\170\634 - 070513 I-30 Str-Apprs Hwy 51\Drawings\r070513_C0.01.dgn
REVISED DATE:

DATE REVISED	DATE FILMED	DATE REVISED	DATE FILMED	FED.RD. DIST.NO.	STATE	FED.AID PROJ.NO.	SHEET NO.	TOTAL SHEETS
				6	ARK.			
				JOB NO.		070513	2	109

(2) INDEX OF SHEETS AND STANDARD DRAWINGS

STATE OF ARKANSAS ★★★ LICENSED PROFESSIONAL ENGINEER ★★★ No.14994 DUSTIN L. TACKETT

DIGITALLY SIGNED 9/2/22

INDEX OF SHEETS

SHEET NO.	TITLE	BRIDGE NO.	DRWG.NO.
1	TITLE SHEET		
2	INDEX OF SHEETS AND STANDARD DRAWINGS		
3	GOVERNING SPECIFICATIONS AND GENERAL NOTES		
4 - 12	TYPICAL SECTIONS OF IMPROVEMENT		
13 - 14	SPECIAL DETAILS		
15 - 23	TEMPORARY EROSION CONTROL DETAILS		
24 - 32	MAINTENANCE OF TRAFFIC DETAILS		
33 - 34	PERMANENT PAVEMENT MARKING DETAILS		
35	SOIL BORING LOG		
36 - 40	QUANTITIES		
41	SCHEDULE OF BRIDGE QUANTITIES	07582	65151
42	SUMMARY OF QUANTITIES AND REVISIONS		
43 - 45	SURVEY CONTROL DETAILS		
46 - 51	PLAN AND PROFILE SHEETS		
52	DRIVEWAY PROFILES		
53	LAYOUT OF BRIDGE - HIGHWAY 51 OVER I-30 (SHEET 1 OF 4)	07582	65152
54	LAYOUT OF BRIDGE - HIGHWAY 51 OVER I-30 (SHEET 2 OF 4)	07582	65153
55	LAYOUT OF BRIDGE - HIGHWAY 51 OVER I-30 (SHEET 3 OF 4)	07582	65154
56	LAYOUT OF BRIDGE - HIGHWAY 51 OVER I-30 (SHEET 4 OF 4)	07582	65155
57	DETAILS OF RETAINING WALLS (SHEET 1 OF 7)	07582	65156
58	DETAILS OF RETAINING WALLS (SHEET 2 OF 7)	07582	65157
59	DETAILS OF RETAINING WALLS (SHEET 3 OF 7)	07582	65158
60	DETAILS OF RETAINING WALLS (SHEET 4 OF 7)	07582	65159
61	DETAILS OF RETAINING WALLS (SHEET 5 OF 7)	07582	65160
62	DETAILS OF RETAINING WALLS (SHEET 6 OF 7)	07582	65161
63	DETAILS OF RETAINING WALLS (SHEET 7 OF 7)	07582	65162
64	DETAILS OF END BENTS (SHEET 1 OF 3)	07582	65163
65	DETAILS OF END BENTS (SHEET 2 OF 3)	07582	65164
66	DETAILS OF END BENTS (SHEET 3 OF 3)	07582	65165
67	DETAILS OF INTERMEDIATE BENT (SHEET 1 OF 3)	07582	65166
68	DETAILS OF INTERMEDIATE BENT (SHEET 2 OF 3)	07582	65167
69	DETAILS OF INTERMEDIATE BENT (SHEET 3 OF 3)	07582	65168
70	DETAILS OF ELASTOMERIC BEARING	07582	65169
71	DETAILS OF 200'-0" CONTINUOUS PLATE GIRDER UNIT (SHEET 1 OF 5)	07582	65170
72	DETAILS OF 200'-0" CONTINUOUS PLATE GIRDER UNIT (SHEET 2 OF 5)	07582	65171
73	DETAILS OF 200'-0" CONTINUOUS PLATE GIRDER UNIT (SHEET 3 OF 5)	07582	65172
74	DETAILS OF 200'-0" CONTINUOUS PLATE GIRDER UNIT (SHEET 4 OF 5)	07582	65173
75	DETAILS OF 200'-0" CONTINUOUS PLATE GIRDER UNIT (SHEET 5 OF 5)	07582	65174
76	DETAILS OF TYPE SPECIAL APPROACH SLABS	07582	65174A
77 - 109	CROSS SECTIONS		

NOTE: CROSS SECTIONS NOT NORMALLY INCLUDED IN PLANS SOLD TO PROSPECTIVE BIDDERS, BUT MAY BE HAD UPON REQUEST.

BRIDGE STANDARD DRAWINGS

DRWG.NO.	TITLE	DATE
55002	STANDARD DETAILS FOR CONCRETE RIPRAP	02-27-14
55006	STANDARD GENERAL NOTES FOR STEEL BRIDGE STRUCTURES	09-02-15
55007	STANDARD DETAILS FOR STEEL BRIDGE STRUCTURES	02-11-16
55008	STANDARD DETAILS FOR POURED SILICONE JOINTS	02-11-16
55020	STANDARD DETAILS FOR STEEL H-PILES AND PILE ENCASEMENTS	03-24-16
55030F	STANDARD DETAILS FOR TYPE F APPROACH GUTTERS	04-08-21
55040C1	STANDARD DETAILS FOR TYPE C1 APPROACH SLAB	02-27-14
55070	STANDARD DETAILS FOR BRIDGE TRAFFIC RAIL TYPE SSTR36	11-05-20

ROADWAY STANDARD DRAWINGS

DRWG.NO.	TITLE	DATE
CDP-1	CONCRETE DITCH PAVING	12-08-16
CG-1	CURBING DETAILS	11-29-07
DR-1	DETAILS OF DRIVEWAYS & ISLANDS	05-19-22
DR-2	DETAILS OF DRIVEWAYS & STREET TURNOUTS	05-19-22
FES-1	FLARED END SECTION	10-18-96
FES-2	FLARED END SECTION	10-18-96
GR-6	GUARDRAIL DETAILS	05-19-22
GR-8	GUARDRAIL DETAILS	11-07-19
GR-9	GUARDRAIL DETAILS	11-07-19
GR-10	GUARDRAIL DETAILS	11-07-19
GR-11	GUARDRAIL DETAILS	11-07-19
GR-12	GUARDRAIL DETAILS	05-14-20
MB-1	MAILBOX DETAILS	11-18-04
PCC-1	CONCRETE PIPE CULVERT FILL HEIGHTS & BEDDING	02-27-14
PCM-1	METAL PIPE CULVERT FILL HEIGHTS & BEDDING	02-27-14
PCP-1	PLASTIC PIPE CULVERT (HIGH DENSITY POLYETHYLENE)	02-27-14
PCP-2	PLASTIC PIPE CULVERT (PVC F949)	02-27-14
PCP-3	PLASTIC PIPE CULVERT (POLYPROPYLENE)	02-27-20
PM-1	PAVEMENT MARKING DETAILS	02-27-20
PU-1	DETAILS OF PIPE UNDERDRAIN	12-08-16
SE-1	TABLES AND METHOD OF SUPERELEVATION FOR ONE-WAY TRAFFIC	11-07-19
SE-2	TABLES AND METHOD OF SUPERELEVATION FOR TWO-WAY TRAFFIC	11-07-19
SHS-8	TYPICAL EXIT RAMP SIGN AND DELINEATOR DETAILS	11-16-17
TC-1	STANDARD TRAFFIC CONTROLS FOR HIGHWAY CONSTRUCTION	11-07-19
TC-2	STANDARD TRAFFIC CONTROLS FOR HIGHWAY CONSTRUCTION	05-20-21
TC-3	STANDARD TRAFFIC CONTROLS FOR HIGHWAY CONSTRUCTION	08-12-21
TC-4	STANDARD TRAFFIC CONTROLS FOR HIGHWAY CONSTRUCTION-TEMPORARY PRECAST BARRIER	11-07-19
TC-5	STANDARD TRAFFIC CONTROLS FOR HIGHWAY CONSTRUCTION-TEMPORARY PRECAST BARRIER	11-07-19
TEC-1	TEMPORARY EROSION CONTROL DEVICES	11-16-17
TEC-2	TEMPORARY EROSION CONTROL DEVICES	06-02-94
TEC-3	TEMPORARY EROSION CONTROL DEVICES	11-03-94
WF-4	WIRE FENCE TYPE C AND D	08-22-02

INDEX OF SHEETS AND STANDARD DRAWINGS

DLTackett 9/2/2022 4:24:00 PM
WORKSPACE: AHTD
L:\2017\1701634 - 070513 I-30 Str-Apprs Hwy 51\Drawings\r070513_IDX_01.dgn
REVISED DATE:

DATE REVISED	DATE FILMED	DATE REVISED	DATE FILMED	FED.RD. DIST.NO.	STATE	FED.AID PROJ.NO.	SHEET NO.	TOTAL SHEETS
				6	ARK.			
				JOB NO.		070513	3	109

(2) GOVERNING SPECIFICATIONS AND GENERAL NOTES

GOVERNING SPECIFICATIONS

ARKANSAS STATE HIGHWAY COMMISSION STANDARD SPECIFICATIONS FOR HIGHWAY CONSTRUCTION, EDITION OF 2014, AND THE FOLLOWING SPECIAL PROVISIONS AND SUPPLEMENTAL SPECIFICATIONS:

NUMBER	TITLE
ERRATA_____	ERRATA FOR THE BOOK OF STANDARD SPECIFICATIONS
FHWA-1273___	REQUIRED CONTRACT PROVISIONS FEDERAL-AID CONSTRUCTION CONTRACTS
FHWA-1273___	SUPPLEMENT - EQUAL EMPLOYMENT OPPORTUNITY - NOTICE TO CONTRACTORS
FHWA-1273___	SUPPLEMENT - SPECIFIC EQUAL EMPLOYMENT OPPORTUNITY RESPONSIBILITIES (23 U.S.C. 140)
FHWA-1273___	SUPPLEMENT - EQUAL EMPLOYMENT OPPORTUNITY - GOALS AND TIMETABLES
FHWA-1273___	SUPPLEMENT - EQUAL EMPLOYMENT OPPORTUNITY - FEDERAL STANDARDS
FHWA-1273___	SUPPLEMENT - POSTERS AND NOTICES REQUIRED FOR FEDERAL-AID PROJECTS
FHWA-1273___	SUPPLEMENT - WAGE RATE DETERMINATION
100-3_____	CONTRACTOR'S LICENSE
100-4_____	DEPARTMENT NAME CHANGE
102-2_____	ISSUANCE OF PROPOSALS
105-4_____	MAINTENENACE DURING CONSTRUCTION
107-2_____	RESTRAINING CONDITIONS
108-1_____	LIQUIDATED DAMAGES
108-2_____	WORK ALLOWED PRIOR TO ISSUANCE OF WORK ORDER
110-1_____	PROTECTION OF WATER QUALITY AND WETLANDS
210-1_____	UNCLASSIFIED EXCAVATION
303-1_____	AGGREGATE BASE COURSE
306-1_____	QUALITY CONTROL AND ACCEPTANCE
307-1_____	CEMENT
308-1_____	CEMENT
400-1_____	TACK COATS
400-4_____	DESIGN AND QUALITY CONTROL OF ASPHALT MIXTURES
400-5_____	PERCENT AIR VOIDS FOR ACHM MIX DESIGNS
400-6_____	LIQUID ANTI-STRIP ADDITIVE
400-7_____	TRACKLESS TACK
404-3_____	DESIGN OF ASPHALT MIXTURES
410-1_____	CONSTRUCTION REQUIREMENTS AND ACCEPTANCE OF ASPHALT CONCRETE PLANT MIX COURSES
410-2_____	DEVICES FOR MEASURING DENSITY FOR ROLLING PATTERNS
410-4_____	EVALUATION OF ACHM SUBLOT REPLACEMENT MATERIAL
501-2_____	CEMENT
600-2_____	INCIDENTAL CONSTRUCTION
603-1_____	LANE CLOSURE NOTIFICATION
604-1_____	RETROREFLECTIVE SHEETING FOR TRAFFIC CONTROL DEVICES IN CONSTRUCTION ZONES
604-3_____	TRAFFIC CONTROL DEVICES IN CONSTRUCTION ZONES (MASH)
605-1_____	CONCRETE DITCH PAVING
606-1_____	PIPE CULVERTS FOR SIDE DRAINS
617-1_____	GUARDRAIL TERMINAL (TYPE 2)
620-1_____	MULCH COVER
621-1_____	FILTER SOCKS
632-1_____	CONCRETE ISLAND
700-2_____	TRAFFIC CONTROL FACILITIES
800-1_____	STRUCTURES
802-3_____	CONCRETE FOR STRUCTURES
802-4_____	CEMENT
804-2_____	REINFORCING STEEL FOR STRUCTURES
807-2_____	STEEL STRUCTURES
808-1_____	INSTALLATION OF ELASTOMERIC BEARINGS
808-2_____	ELASTOMERIC BEARINGS
JOB 070513___	ARCHITECTURAL FINISH
JOB 070513___	ASSESSMENT OF WORKING DAYS – MAINTENANCE OF TRAFFIC
JOB 070513___	BIDDING REQUIREMENTS AND CONDITIONS
JOB 070513___	BROADBAND INTERNET SERVICE FOR ASPHALT CONCRETE PLANT
JOB 070513___	BROADBAND INTERNET SERVICE FOR FIELD OFFICE
JOB 070513___	CARGO PREFERENCE ACT REQUIREMENTS
JOB 070513___	CLASS C FLY ASH IN PORTLAND CEMENT CONCRETE PAVEMENT AND CLASS S(AE) CONCRETE
JOB 070513___	COLD MILLING - COUNTY PROPERTY
JOB 070513___	CONCRETE BRIDGE DECK CURING AND SURFACE TREATMENT RESTRICTIONS
JOB 070513___	CULVERT CLEAN OUT
JOB 070513___	DIRECT TENSION INDICATORS FOR HIGH STRENGTH BOLT ASSEMBLIES
JOB 070513___	DISADVANTAGED BUSINESS ENTERPRISE BIDDER'S RESPONSIBILITIES
JOB 070513___	ENHANCED THERMOPLASTIC PAVEMENT MARKING
JOB 070513___	EXCAVATION AND EMBANKMENT
JOB 070513___	FLEXIBLE BEGINNING OF WORK – CALENDAR DAY CONTRACT
JOB 070513___	GOALS FOR DISADVANTAGED BUSINESS ENTERPRISE PARTICIPATION
JOB 070513___	LIQUIDATED DAMAGES PROCEDURE FOR BID LETTINGS
JOB 070513___	LONGITUDINAL JOINT DENSITIES FOR ACHM SURFACE COURSES
JOB 070513___	MAINTENANCE OF TRAFFIC
JOB 070513___	MANDATORY ELECTRONIC CONTRACT
JOB 070513___	MANDATORY ELECTRONIC DOCUMENT SUBMITTAL
JOB 070513___	NESTING SITES OF MIGRATORY BIRDS
JOB 070513___	PARTNERING REQUIREMENTS
JOB 070513___	PLASTIC PIPE
JOB 070513___	PRICE ADJUSTMENT FOR ASPHALT BINDER
JOB 070513___	PRICE ADJUSTMENT FOR FUEL
JOB 070513___	PROHIBITION OF CERTAIN TELECOMMUNICATIONS AND VIDEO SURVEILLANCE SERVICES OR EQUIPMENT
JOB 070513___	RESTRICTIONS ON THE USE OF RECYCLED ASPHALT PAVEMENT MATERIAL
JOB 070513___	RETAINING WALLS
JOB 070513___	SHORING
JOB 070513___	SHORING FOR CULVERTS
JOB 070513___	SITE USE (A+C METHOD) – CALENDAR DAY CONTRACT
JOB 070513___	SOIL STABILIZATION
JOB 070513___	SPECIAL SAFETY REQUIREMENTS FOR BRIDGES
JOB 070513___	STORM WATER POLLUTION PREVENTION PLAN
JOB 070513___	SUBMISSION OF ASPHALT CONCRETE HOT MIX ACCEPTANCE TEST RESULTS
JOB 070513___	TEMPORARY RETAINING WALLS
JOB 070513___	TEXTURED COATING FINISH
JOB 070513___	TRAFFIC CONTROL DEVICES IN CONSTRUCTION ZONES
JOB 070513___	UTILITY ADJUSTMENTS
JOB 070513___	VALUE ENGINEERING
JOB 070513___	WARM MIX ASPHALT
JOB 070513___	WATER POLLUTION CONTROL

STATE OF ARKANSAS
LICENSED PROFESSIONAL ENGINEER
No.14994
DUSTIN L. TACKETT

DIGITALLY SIGNED 9/21/22

GENERAL NOTES

1. GRADE LINE DENOTES FINISHED GRADE WHERE SHOWN ON PLANS.
2. ALL PIPE LINES, POWER, TELEPHONE, AND TELEGRAPH LINES TO BE MOVED OR LOWERED BY THE RESPECTIVE OWNERS AS PER AGREEMENT WITH SUCH OWNERS.
3. ANY EQUIPMENT OR APPURTENANCE THAT INTERFERES WITH THE PROPOSED CONSTRUCTION AND WHICH MAY BE THE PROPERTY OF UTILITY SERVICE ORGANIZATIONS SHALL BE MOVED BY THE OWNERS UNLESS OTHERWISE PROVIDED.
4. THE CONTRACTOR SHALL BE RESPONSIBLE FOR MAINTAINING U. S. MAILBOXES WITHIN THE PROJECT LIMITS IN SUCH A MANNER THAT THE PUBLIC MAY RECEIVE CONTINUED MAIL SERVICE. PAYMENT WILL BE CONSIDERED INCLUDED IN THE PRICE BID FOR THE VARIOUS BID ITEMS.
5. ALL LAND MONUMENTS LOCATED WITHIN THE CONSTRUCTION AREA SHALL BE PROTECTED IN ACCORDANCE WITH SECTION 107.12 OF THE STANDARD SPECIFICATIONS.
6. ALL TREES THAT DO NOT DIRECTLY INTERFERE WITH THE PROPOSED CONSTRUCTION SHALL BE SPARED AS DIRECTED BY THE ENGINEER. CARE AND DISCRETION SHALL BE USED TO ENSURE THAT ALL TREES NOT TO BE REMOVED SHALL BE HARMED AS LITTLE AS POSSIBLE DURING THE CONSTRUCTION OPERATIONS.
7. THE CONTRACTOR SHALL BE RESPONSIBLE FOR PROVIDING A FENCE TO CONTROL LIVESTOCK IN AREAS WHERE PASTURES ARE SEVERED. WIRE FENCE MAY BE CONSTRUCTED INITIALLY, OR IN LIEU THEREOF, THE CONTRACTOR AT HIS OWN EXPENSE, MAY ELECT TO PROVIDE TEMPORARY FENCING SUITABLE TO CONTAIN LIVESTOCK.
8. THE SEQUENCE AS SHOWN ON THE MAINTENANCE OF TRAFFIC PLANS IS A GENERAL OUTLINE FOR THE CONSTRUCTION OF THIS PROJECT, AND IN NO WAY IS IT INTENDED TO COVER EVERY ITEM IN THE PROJECT. ITEMS NOT CRITICAL TO THE CONSTRUCTION SEQUENCE MAY BE CONSTRUCTED IN ANY STAGE AS APPROVED BY THE RESIDENT ENGINEER.
9. ALL FLEXIBLE BASE AND ASPHALTIC PAVEMENTS REMOVED SHALL BE PAID FOR UNDER THE ITEM NO. 210 - UNCLASSIFIED EXCAVATION.
10. THE EXISTING ASPHALT PAVEMENT TO BE REMOVED FROM THE REMAINING PAVEMENT SHALL BE SEPARATED BY SAWING ALONG A NEAT LINE. AFTER SAWING, THE PAVEMENT TO BE REMOVED SHALL BE CAREFULLY REMOVED IN A MANNER THAT WILL NOT DAMAGE THE PAVEMENT THAT IS TO REMAIN. ANY DAMAGE OF THE ASPHALT PAVEMENT THAT IS TO REMAIN IN PLACE SHALL BE REPAIRED AT THE CONTRACTOR'S EXPENSE.

DLTackett 9/21/2022 9:23:21 AM
WORKSPACE: AHTD
L:\2017\7017634 - 070513 I-30 Str-Apprs Hwy 5\Drawings\SUBMT\2022.9.2_ARDOT 100% Submittal\DGN\r070513_IDX_01.dgn
REVISED DATE:

DATE REVISED	DATE FILMED	DATE REVISED	DATE FILMED	FED.RD. DIST.NO.	STATE	FED.AID PROJ.NO.	SHEET NO.	TOTAL SHEETS
				6	ARK.			
				JOB NO.		070513	4	109

(2) TYPICAL SECTIONS OF IMPROVEMENT

STATE OF ARKANSAS
LICENSED PROFESSIONAL ENGINEER
No.14994
DUSTIN L. TACKETT
DIGITALLY SIGNED 9/2/22

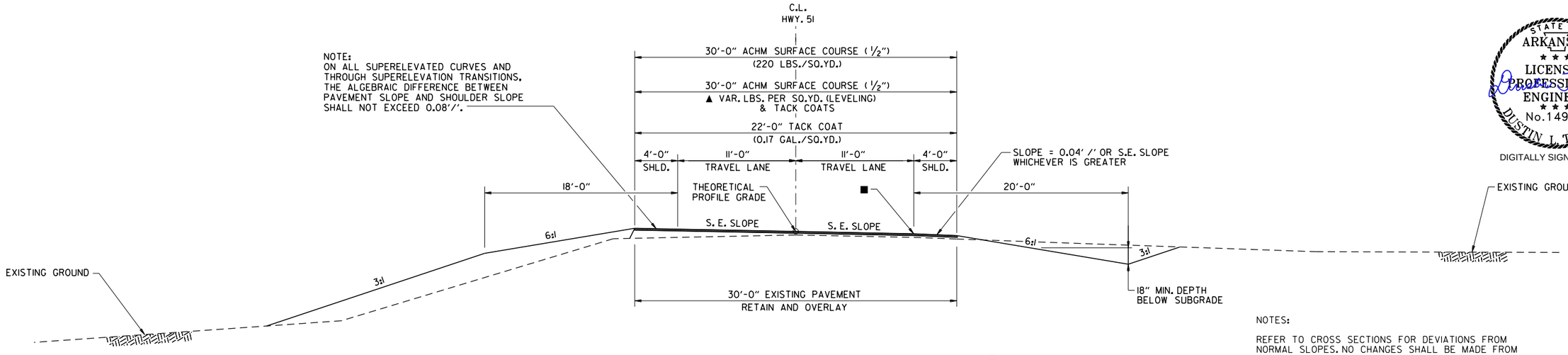

NOTE:
ON ALL SUPERELEVATED CURVES AND THROUGH SUPERELEVATION TRANSITIONS, THE ALGEBRAIC DIFFERENCE BETWEEN PAVEMENT SLOPE AND SHOULDER SLOPE SHALL NOT EXCEED 0.08'/'.

▲ TO BE USED IF AND WHERE DIRECTED BY THE ENGINEER

■ POINT OF SUPERELEVATION ROTATION (0.22' BELOW PROFILE GRADE).

HWY. 51 OVERLAY SUPERELEVATED SECTION

STA. 108+00.00 TO STA. 108+72.85

NOTES:

REFER TO CROSS SECTIONS FOR DEVIATIONS FROM NORMAL SLOPES. NO CHANGES SHALL BE MADE FROM THE PLANNED SLOPES WITHOUT THE APPROVAL OF THE ENGINEER.

THE THICKNESS OF AGGREGATE BASE COURSE SHALL BE WITHIN PLUS OR MINUS ONE INCH OF THE PLAN THICKNESS SHOWN. THE CONTRACTOR WILL CORRECT ANY DEFICIENT THICKNESS THAT DOES NOT MEET THE TOLERANCE INDICATED. PAYMENT WILL NOT BE MADE FOR MATERIAL PLACED IN EXCESS OF THE TOLERANCE INDICATED.

THE FINAL 2" OF SURFACE COURSE IS TO BE PLACED AFTER ALL OTHER COURSES HAVE BEEN LAID. LONGITUDINAL JOINTS SHALL BE AT THE LANE LINES.

ASPHALT FOR LEVELING OF EXISTING PAVEMENT SHALL BE PLACED ONLY IF AND WHERE DIRECTED BY THE ENGINEER. CALCULATIONS FOR THE AMOUNT OF LEVELING AND/OR LEVELING OPERATIONS SHALL BE PERFORMED BEFORE CONSTRUCTING NOTCH AND WIDENING. CALCULATIONS WILL NOT BE PAID FOR DIRECTLY, BUT PAYMENT WILL BE CONSIDERED INCLUDED IN THE VARIOUS PAY ITEMS.

BLEEDER DITCHES - PRIOR TO AND DURING PLACEMENT OF PAVEMENT AT THE NOTCH, THE CONTRACTOR SHALL PROVIDE POSITIVE DRAINAGE AT ALL TIMES. THE METHOD(S) AND SPACING USED SHALL BE APPROVED BY THE ENGINEER. PAYMENT FOR THIS WORK SHALL BE CONSIDERED INCLUDED IN THE PRICE BID FOR THE VARIOUS CONTRACT ITEMS.

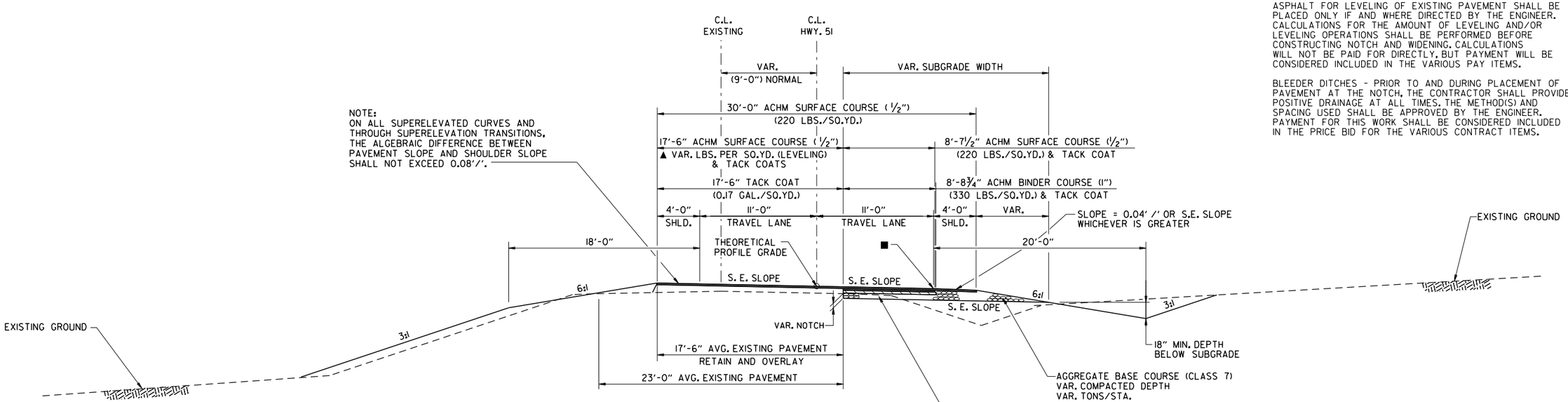

NOTE:
ON ALL SUPERELEVATED CURVES AND THROUGH SUPERELEVATION TRANSITIONS, THE ALGEBRAIC DIFFERENCE BETWEEN PAVEMENT SLOPE AND SHOULDER SLOPE SHALL NOT EXCEED 0.08'/'.

▲ TO BE USED IF AND WHERE DIRECTED BY THE ENGINEER

HWY. 51 NOTCH AND WIDEN SUPERELEVATED SECTION

STA. 108+72.85 TO STA. 111+27.51
STA. 123+94.91 TO STA. 126+75.55

■ POINT OF SUPERELEVATION ROTATION (0.22' BELOW PROFILE GRADE).

NOTE:
DIMENSIONS SHOWN REPRESENT AVERAGE WIDTHS. ACTUAL DIMENSIONS VARY WITHIN THE NOTCH AN WIDEN STATION RANGE.

TYPICAL SECTIONS OF IMPROVEMENT

DLtackett 9/2/2022 4:24:23 PM
WORKSPACE: AHTD
\\garverinc.local\gdata\Projects\2017\17017634 - 070513 I-30 Str-Apprs Hwy 51\Drawings\r070513_TYP.dgn
REVISED DATE:

DATE REVISED	DATE FILMED	DATE REVISED	DATE FILMED	FED.RD. DIST.NO.	STATE	FED.AID PROJ.NO.	SHEET NO.	TOTAL SHEETS
				6	ARK.			
				JOB NO.		070513	5	109

(2) TYPICAL SECTIONS OF IMPROVEMENT

STATE OF ARKANSAS
LICENSED PROFESSIONAL ENGINEER
No.14994
DUSTIN L. TACKETT
DIGITALLY SIGNED 9/2/22

NOTE:
ON ALL SUPERELEVATED CURVES AND THROUGH SUPERELEVATION TRANSITIONS, THE ALGEBRAIC DIFFERENCE BETWEEN PAVEMENT SLOPE AND SHOULDER SLOPE SHALL NOT EXCEED 0.08'/'.

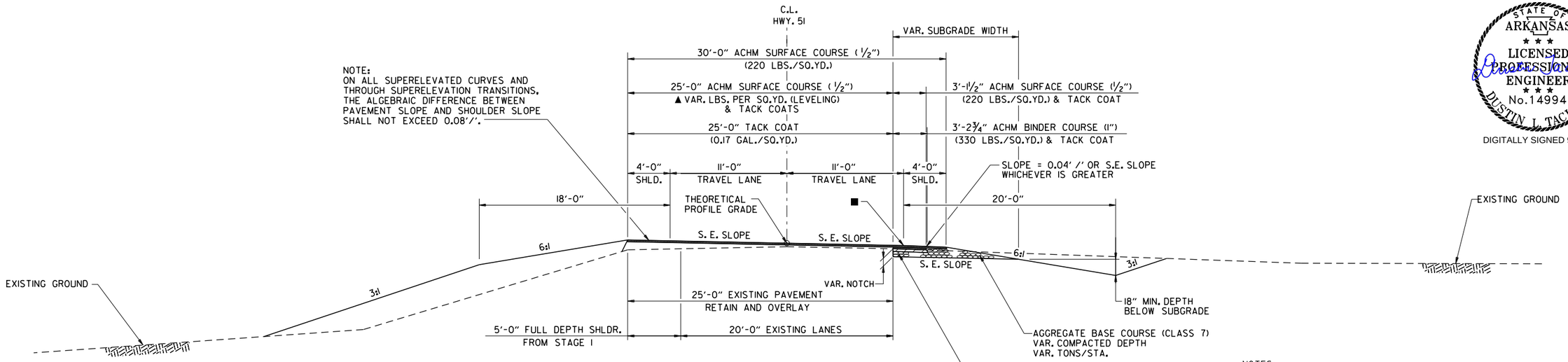

▲ TO BE USED IF AND WHERE DIRECTED BY THE ENGINEER

HWY. 51 NOTCH AND WIDEN SUPERELEVATED SECTION

STA. 126+75.55 TO STA. 128+25.55

■ POINT OF SUPERELEVATION ROTATION (0.22' BELOW PROFILE GRADE).

NOTES:

REFER TO CROSS SECTIONS FOR DEVIATIONS FROM NORMAL SLOPES. NO CHANGES SHALL BE MADE FROM THE PLANNED SLOPES WITHOUT THE APPROVAL OF THE ENGINEER.

THE THICKNESS OF AGGREGATE BASE COURSE SHALL BE WITHIN PLUS OR MINUS ONE INCH OF THE PLAN THICKNESS SHOWN. THE CONTRACTOR WILL CORRECT ANY DEFICIENT THICKNESS THAT DOES NOT MEET THE TOLERANCE INDICATED. PAYMENT WILL NOT BE MADE FOR MATERIAL PLACED IN EXCESS OF THE TOLERANCE INDICATED.

THE FINAL 2" OF SURFACE COURSE IS TO BE PLACED AFTER ALL OTHER COURSES HAVE BEEN LAID. LONGITUDINAL JOINTS SHALL BE AT THE LANE LINES.

ASPHALT FOR LEVELING OF EXISTING PAVEMENT SHALL BE PLACED ONLY IF AND WHERE DIRECTED BY THE ENGINEER. CALCULATIONS FOR THE AMOUNT OF LEVELING AND/OR LEVELING OPERATIONS SHALL BE PERFORMED BEFORE CONSTRUCTING NOTCH AND WIDENING. CALCULATIONS WILL NOT BE PAID FOR DIRECTLY, BUT PAYMENT WILL BE CONSIDERED INCLUDED IN THE VARIOUS PAY ITEMS.

BLEEDER DITCHES - PRIOR TO AND DURING PLACEMENT OF PAVEMENT AT THE NOTCH, THE CONTRACTOR SHALL PROVIDE POSITIVE DRAINAGE AT ALL TIMES. THE METHOD(S) AND SPACING USED SHALL BE APPROVED BY THE ENGINEER. PAYMENT FOR THIS WORK SHALL BE CONSIDERED INCLUDED IN THE PRICE BID FOR THE VARIOUS CONTRACT ITEMS.

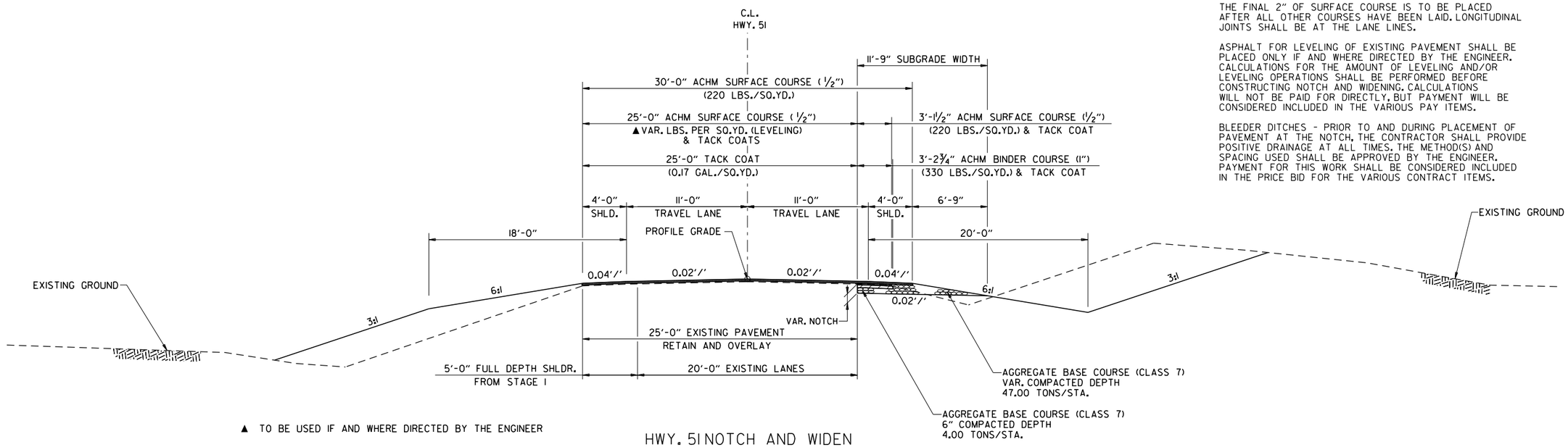

▲ TO BE USED IF AND WHERE DIRECTED BY THE ENGINEER

HWY. 51 NOTCH AND WIDEN TYPICAL SECTION

STA. 128+25.55 TO STA. 128+50.00

TYPICAL SECTIONS OF IMPROVEMENT

DLTackett 9/2/2022 4:24:23 PM
WORKSPACE: AHTD
\\garverinc.local\gdata\Projects\2017\170176 34 - 070513 I-30 Str-Apprs Hwy 51\Drawings\r070513_TYP.dgn
REVISED DATE:

DATE REVISED	DATE FILMED	DATE REVISED	DATE FILMED	FED.RD. DIST.NO.	STATE	FED.AID PROJ.NO.	SHEET NO.	TOTAL SHEETS
				6	ARK.			
				JOB NO.		070513	6	109

(2) TYPICAL SECTIONS OF IMPROVEMENT

STATE OF ARKANSAS
LICENSED PROFESSIONAL ENGINEER
No.14994
DUSTIN L. TACKETT

DIGITALLY SIGNED 9/2/22

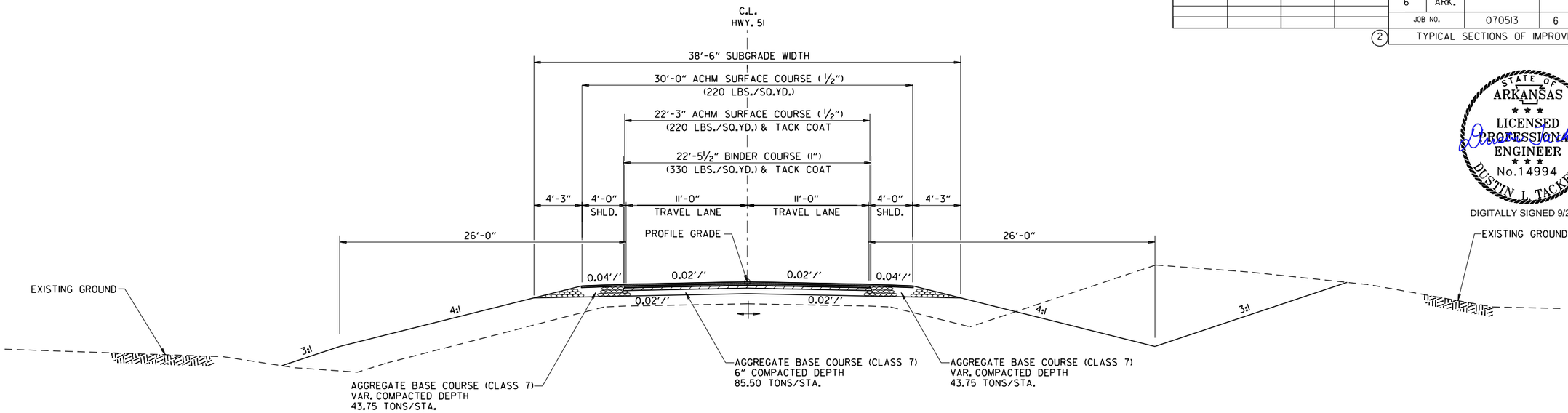

HWY. 51 TYPICAL SECTION

STA. 111+27.51 TO STA. 116+27.42
STA. 119+72.58 TO STA. 120+10.88

NOTE:
SEE BRIDGE LAYOUTS FOR APPROACH SLABS AND BRIDGE STRUCTURE FROM STA. 116+27.42 TO STA. 119+72.58.

NOTES:

REFER TO CROSS SECTIONS FOR DEVIATIONS FROM NORMAL SLOPES. NO CHANGES SHALL BE MADE FROM THE PLANNED SLOPES WITHOUT THE APPROVAL OF THE ENGINEER.

THE THICKNESS OF AGGREGATE BASE COURSE SHALL BE WITHIN PLUS OR MINUS ONE INCH OF THE PLAN THICKNESS SHOWN. THE CONTRACTOR WILL CORRECT ANY DEFICIENT THICKNESS THAT DOES NOT MEET THE TOLERANCE INDICATED. PAYMENT WILL NOT BE MADE FOR MATERIAL PLACED IN EXCESS OF THE TOLERANCE INDICATED.

THE FINAL 2" OF SURFACE COURSE IS TO BE PLACED AFTER ALL OTHER COURSES HAVE BEEN LAID. LONGITUDINAL JOINTS SHALL BE AT THE LANE LINES.

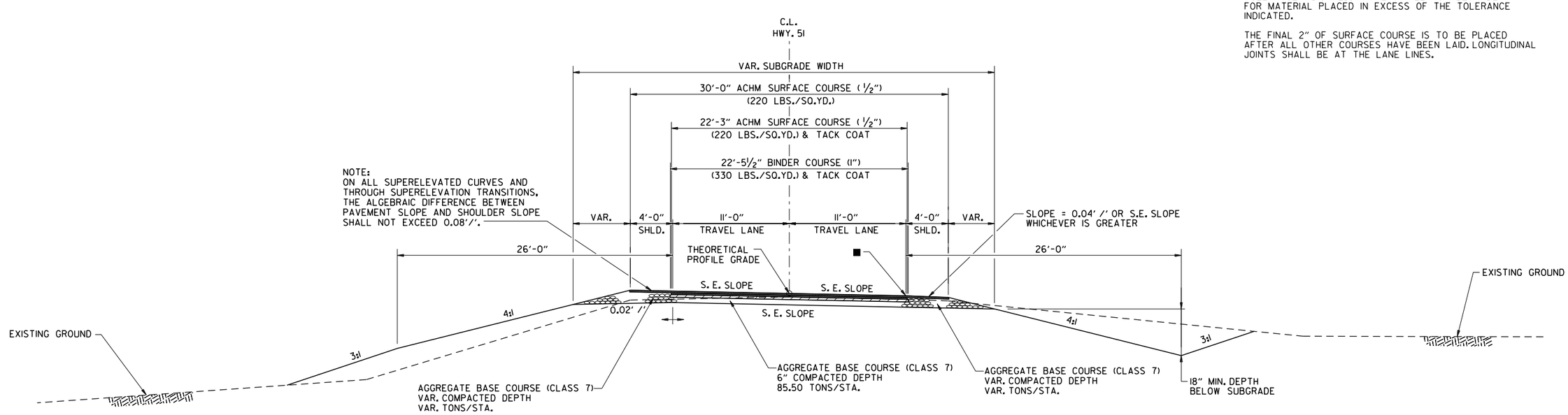

HWY. 51 SUPERELEVATED SECTION

STA. 120+10.88 TO STA. 123+94.91

■ POINT OF SUPERELEVATION ROTATION (0.22' BELOW PROFILE GRADE).

TYPICAL SECTIONS OF IMPROVEMENT

DLTackett 9/2/2022 4:24:24 PM
WORKSPACE: AHTD
\\garverinc.local\gdata\Projects\2017\17017634 - 070513 I-30 Str-Apprs Hwy 51\Drawings\070513_TYP.dgn
REVISED DATE:

DATE REVISED	DATE FILMED	DATE REVISED	DATE FILMED	FED.RD. DIST.NO.	STATE	FED.AID PROJ.NO.	SHEET NO.	TOTAL SHEETS
				6	ARK.			
				JOB NO.		070513	7	109

(2) TYPICAL SECTIONS OF IMPROVEMENT

STATE OF ARKANSAS
LICENSED PROFESSIONAL ENGINEER
No.14994
DUSTIN L. TACKETT
DIGITALLY SIGNED 9/2/22

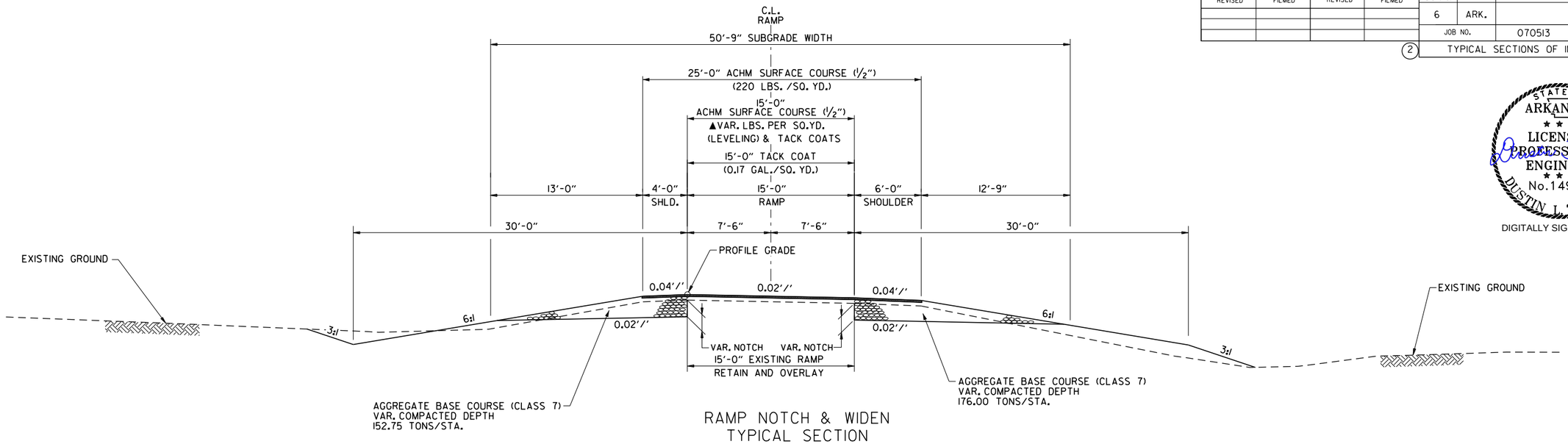

RAMP NOTCH & WIDEN TYPICAL SECTION

(SHOWN IN DIRECTION OF TRAFFIC)

RAMP 1 STA. 203+00.00 TO STA. 204+83.50
RAMP 2 STA. 205+12.03 TO STA. 205+42.46
RAMP 3 STA. 308+45.99 TO STA. 309+00.00

NOTES:

REFER TO CROSS SECTIONS FOR DEVIATIONS FROM NORMAL SLOPES. NO CHANGES SHALL BE MADE FROM THE PLANNED SLOPES WITHOUT THE APPROVAL OF THE ENGINEER.

THE THICKNESS OF AGGREGATE BASE COURSE SHALL BE WITHIN PLUS OR MINUS ONE INCH OF THE PLAN THICKNESS SHOWN. THE CONTRACTOR WILL CORRECT ANY DEFICIENT THICKNESS THAT DOES NOT MEET THE TOLERANCE INDICATED. PAYMENT WILL NOT BE MADE FOR MATERIAL PLACED IN EXCESS OF THE TOLERANCE INDICATED.

THE FINAL 2" OF SURFACE COURSE IS TO BE PLACED AFTER ALL OTHER COURSES HAVE BEEN LAID. LONGITUDINAL JOINTS SHALL BE AT THE LANE LINES.

ASPHALT FOR LEVELING OF EXISTING PAVEMENT SHALL BE PLACED ONLY IF AND WHERE DIRECTED BY THE ENGINEER. CALCULATIONS FOR THE AMOUNT OF LEVELING AND/OR LEVELING OPERATIONS SHALL BE PERFORMED BEFORE CONSTRUCTING NOTCH AND WIDENING. CALCULATIONS WILL NOT BE PAID FOR DIRECTLY, BUT PAYMENT WILL BE CONSIDERED INCLUDED IN THE VARIOUS PAY ITEMS.

BLEEDER DITCHES - PRIOR TO AND DURING PLACEMENT OF PAVEMENT AT THE NOTCH, THE CONTRACTOR SHALL PROVIDE POSITIVE DRAINAGE AT ALL TIMES. THE METHOD(S) AND SPACING USED SHALL BE APPROVED BY THE ENGINEER. PAYMENT FOR THIS WORK SHALL BE CONSIDERED INCLUDED IN THE PRICE BID FOR THE VARIOUS CONTRACT ITEMS.

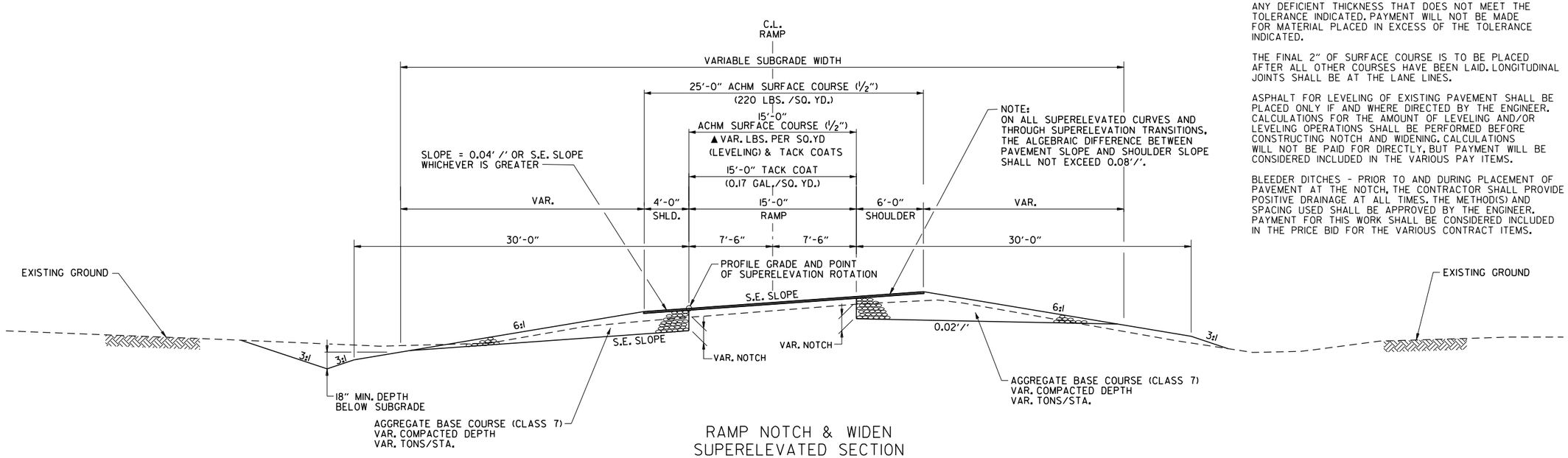

RAMP NOTCH & WIDEN SUPERELEVATED SECTION

(SHOWN IN DIRECTION OF TRAFFIC)

RAMP 2 STA. 205+42.46 TO STA. 208+42.46
RAMP 4 STA. 300+19.69 TO STA. 303+00.00

TYPICAL SECTIONS OF IMPROVEMENT

DLTackett 9/2/2022 4:24:25 PM
WORKSPACE: AHTD
\\garverinc.local\gdata\Projects\2017\170176 34 - 070513 I-30 Str-Apprs Hwy 5\Drawings\r070513_TYP.dgn
REVISED DATE:

DATE REVISED	DATE FILMED	DATE REVISED	DATE FILMED	FED.RD. DIST.NO.	STATE	FED.AID PROJ.NO.	SHEET NO.	TOTAL SHEETS
				6	ARK.			
				JOB NO.		070513	8	109

(2) TYPICAL SECTIONS OF IMPROVEMENT

STATE OF ARKANSAS
LICENSED PROFESSIONAL ENGINEER
No.14994
DUSTIN L. TACKETT

DIGITALLY SIGNED 9/2/22

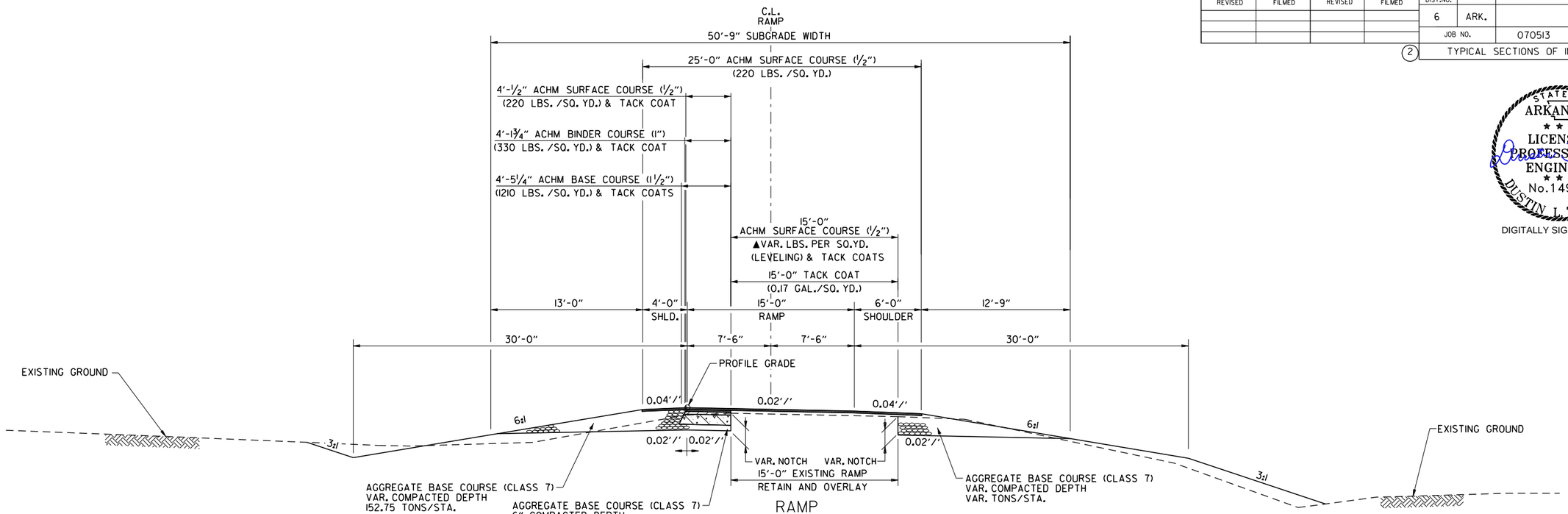

RAMP
TYPICAL SECTION

(SHOWN IN DIRECTION OF TRAFFIC)

RAMP 3 STA. 305+12.69 TO STA. 308+45.99

NOTES:
DIMENSIONS SHOWN REPRESENT AVERAGE WIDTHS. ACTUAL DIMENSIONS VARY WITHIN THE NOTCH AND WIDEN STATION RANGE.

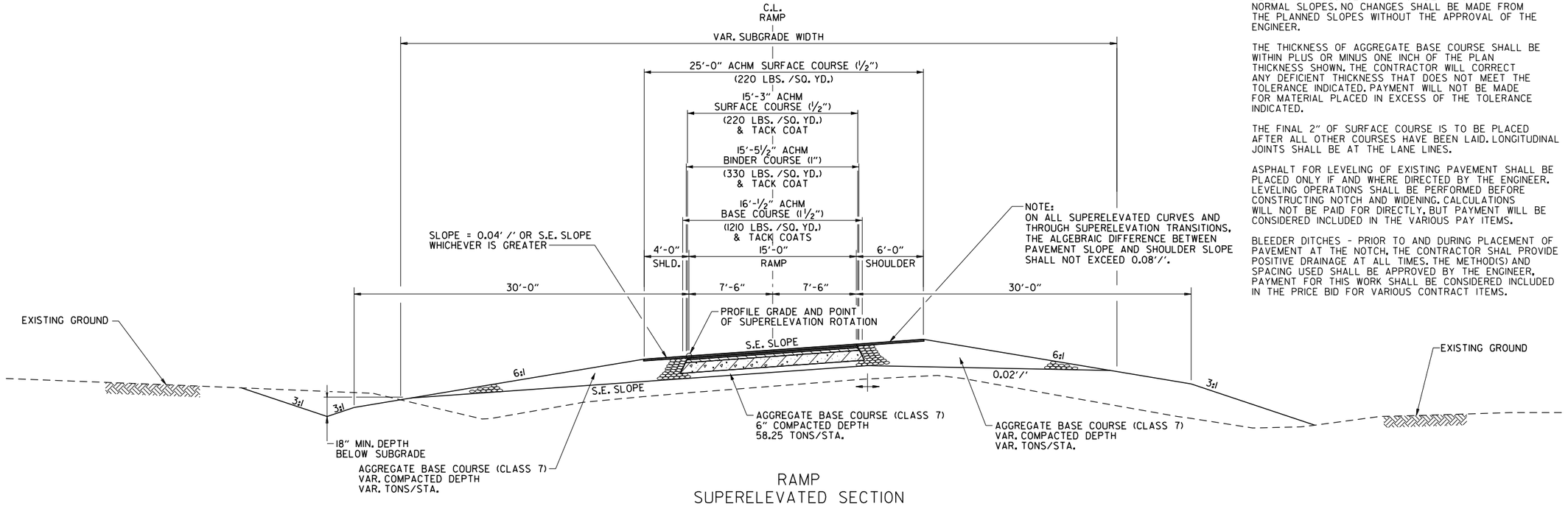

RAMP
SUPERELEVATED SECTION

(SHOWN IN DIRECTION OF TRAFFIC)

RAMP 4 STA. 303+00.00 TO STA. 303+99.69

NOTES:

REFER TO CROSS SECTIONS FOR DEVIATIONS FROM NORMAL SLOPES. NO CHANGES SHALL BE MADE FROM THE PLANNED SLOPES WITHOUT THE APPROVAL OF THE ENGINEER.

THE THICKNESS OF AGGREGATE BASE COURSE SHALL BE WITHIN PLUS OR MINUS ONE INCH OF THE PLAN THICKNESS SHOWN. THE CONTRACTOR WILL CORRECT ANY DEFICIENT THICKNESS THAT DOES NOT MEET THE TOLERANCE INDICATED. PAYMENT WILL NOT BE MADE FOR MATERIAL PLACED IN EXCESS OF THE TOLERANCE INDICATED.

THE FINAL 2" OF SURFACE COURSE IS TO BE PLACED AFTER ALL OTHER COURSES HAVE BEEN LAID. LONGITUDINAL JOINTS SHALL BE AT THE LANE LINES.

ASPHALT FOR LEVELING OF EXISTING PAVEMENT SHALL BE PLACED ONLY IF AND WHERE DIRECTED BY THE ENGINEER. LEVELING OPERATIONS SHALL BE PERFORMED BEFORE CONSTRUCTING NOTCH AND WIDENING. CALCULATIONS WILL NOT BE PAID FOR DIRECTLY, BUT PAYMENT WILL BE CONSIDERED INCLUDED IN THE VARIOUS PAY ITEMS.

BLEEDER DITCHES - PRIOR TO AND DURING PLACEMENT OF PAVEMENT AT THE NOTCH, THE CONTRACTOR SHAL PROVIDE POSITIVE DRAINAGE AT ALL TIMES. THE METHOD(S) AND SPACING USED SHALL BE APPROVED BY THE ENGINEER. PAYMENT FOR THIS WORK SHALL BE CONSIDERED INCLUDED IN THE PRICE BID FOR VARIOUS CONTRACT ITEMS.

TYPICAL SECTIONS OF IMPROVEMENT

DLTackett 9/2/2022 4:24:25 PM
WORKSPACE: AHTD
\\garverinc.local\gdata\Projects\2017\17017634 - 070513 I-30 Str-Apprs Hwy 5\Drawings\r070513_TYP.dgn
REVISED DATE:

DATE REVISED	DATE FILMED	DATE REVISED	DATE FILMED	FED.RD. DIST.NO.	STATE	FED.AID PROJ.NO.	SHEET NO.	TOTAL SHEETS
				6	ARK.			
				JOB NO.		070513	9	109

(2) TYPICAL SECTIONS OF IMPROVEMENT

STATE OF ARKANSAS
LICENSED PROFESSIONAL ENGINEER
No.14994
DUSTIN L. TACKETT

DIGITALLY SIGNED 9/2/22

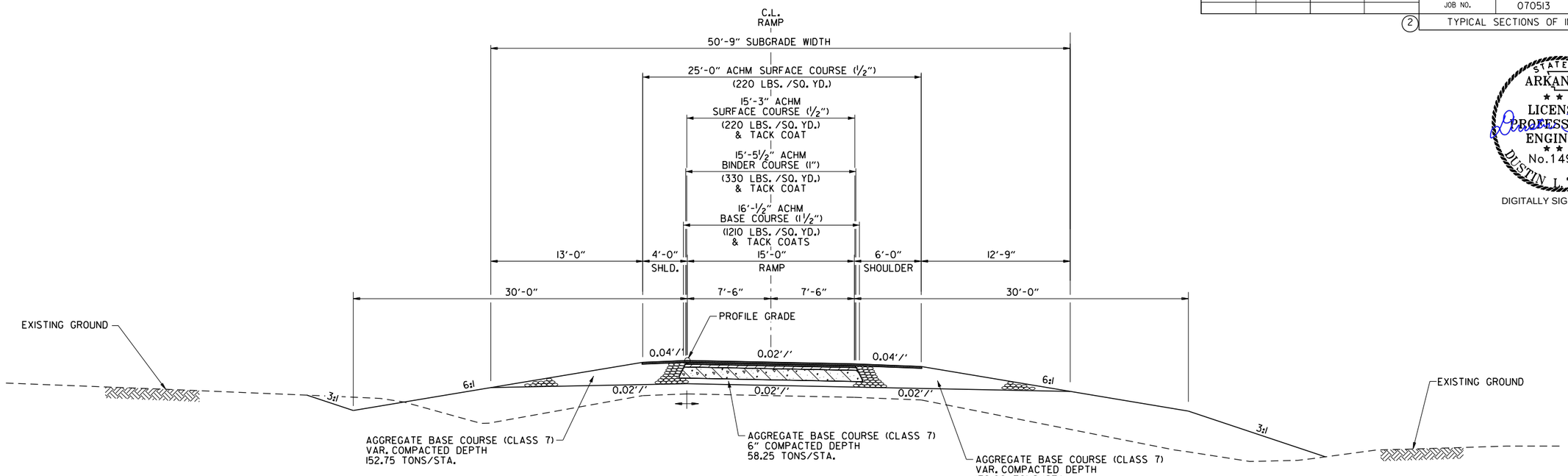

RAMP TYPICAL SECTION

(SHOWN IN DIRECTION OF TRAFFIC)

RAMP 4 STA. 303+99.69 TO STA. 304+89.63

NOTES:

REFER TO CROSS SECTIONS FOR DEVIATIONS FROM NORMAL SLOPES. NO CHANGES SHALL BE MADE FROM THE PLANNED SLOPES WITHOUT THE APPROVAL OF THE ENGINEER.

THE THICKNESS OF AGGREGATE BASE COURSE SHALL BE WITHIN PLUS OR MINUS ONE INCH OF THE PLAN THICKNESS SHOWN. THE CONTRACTOR WILL CORRECT ANY DEFICIENT THICKNESS THAT DOES NOT MEET THE TOLERANCE INDICATED. PAYMENT WILL NOT BE MADE FOR MATERIAL PLACED IN EXCESS OF THE TOLERANCE INDICATED.

THE FINAL 2" OF SURFACE COURSE IS TO BE PLACED AFTER ALL OTHER COURSES HAVE BEEN LAID. LONGITUDINAL JOINTS SHALL BE AT THE LANE LINES.

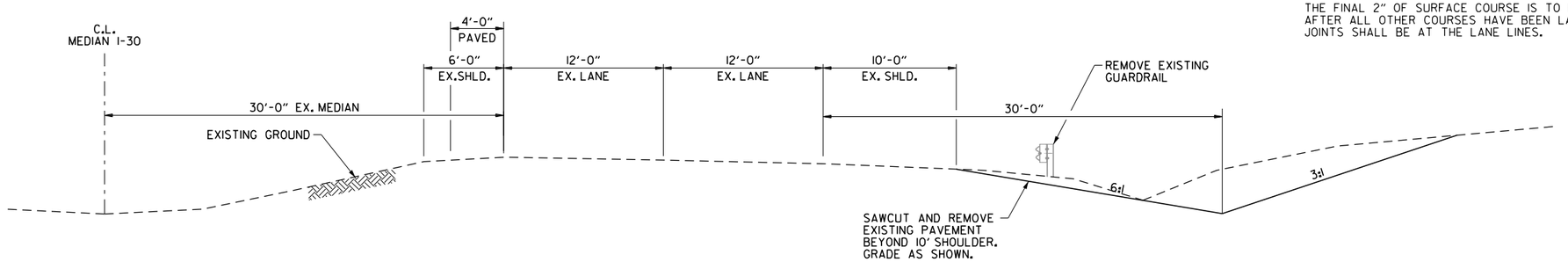

I-30 PARTIAL SECTION

(SHOWN IN DIRECTION OF TRAFFIC)

EB STA. 2607+78.00 TO STA. 2611+25.00
WB STA. 2612+50.00 TO STA. 2614+50.00

TYPICAL SECTIONS OF IMPROVEMENT

DLTackett 9/2/2022 4:24:26 PM
WORKSPACE: AHTD
\\garverinc.local\gdata\Projects\2017\7017634 - 070513 I-30 Str-Apprs Hwy 5\Drawings\070513_TYP.dgn
REVISED DATE:

DATE REVISED	DATE FILMED	DATE REVISED	DATE FILMED	FED.RD. DIST.NO.	STATE	FED.AID PROJ.NO.	SHEET NO.	TOTAL SHEETS
				6	ARK.			
				JOB NO.		070513	10	109

(2) TYPICAL SECTIONS OF IMPROVEMENT

STATE OF ARKANSAS
LICENSED PROFESSIONAL ENGINEER
No.14994
DUSTIN L. TACKETT

DIGITALLY SIGNED 9/21/22

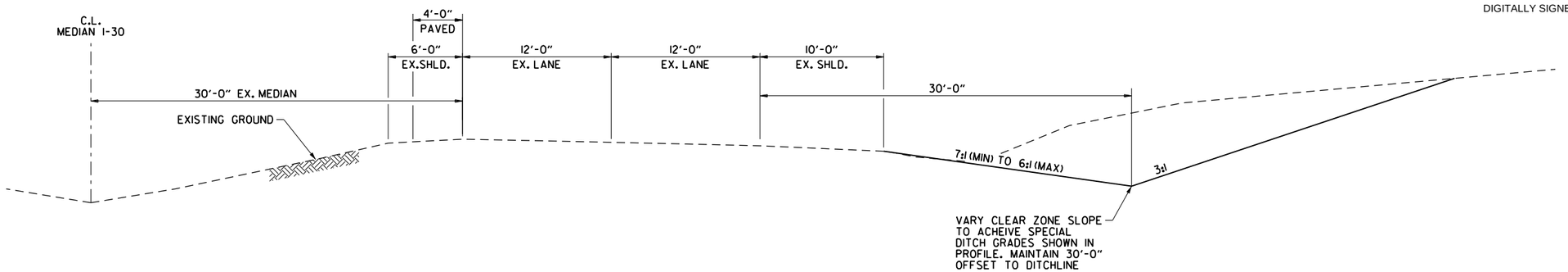

I-30 PARTIAL SECTION

(SHOWN IN DIRECTION OF TRAFFIC)

WB STA. STA. 2609+00.00 TO 2611+25.00

NOTES:

REFER TO CROSS SECTIONS FOR DEVIATIONS FROM NORMAL SLOPES. NO CHANGES SHALL BE MADE FROM THE PLANNED SLOPES WITHOUT THE APPROVAL OF THE ENGINEER.

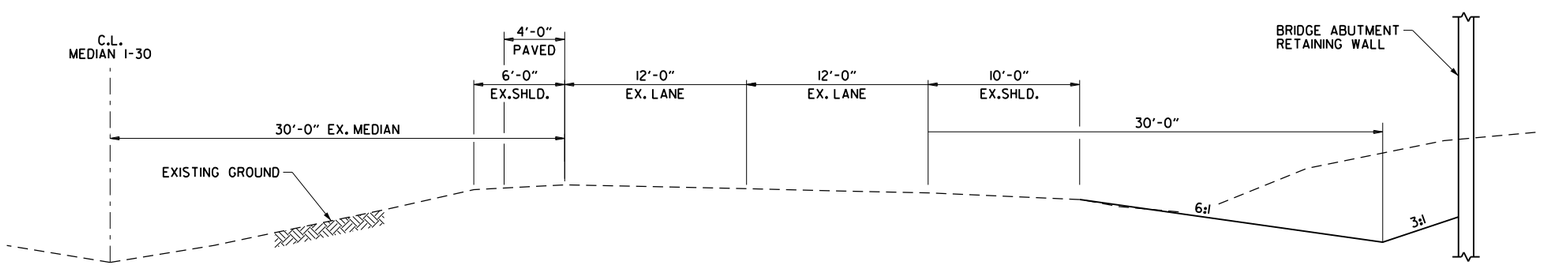

I-30 PARTIAL SECTION

(SHOWN IN DIRECTION OF TRAFFIC)

EB STA. STA. 2611+25.00 TO 2612+85.00
WB STA. STA. 2611+25.00 TO 2612+50.00

TYPICAL SECTIONS OF IMPROVEMENT

DLTackett 9/21/2022 9:21:44 AM
WORKSPACE: AHTD
L:\2017\701634 - 070513 I-30 Str-Apprs Hwy 5\Drawings\SUBMT\2022.9.2.ARDOT 100% Submittal\DGN\r070513_TYP.dgn
REVISED DATE:

DATE REVISED	DATE FILMED	DATE REVISED	DATE FILMED	FED.RD. DIST.NO.	STATE	FED.AID PROJ.NO.	SHEET NO.	TOTAL SHEETS
				6	ARK.			
				JOB NO.		070513	11	109

(2) TYPICAL SECTIONS OF IMPROVEMENT

STATE OF ARKANSAS
LICENSED PROFESSIONAL ENGINEER
No.14994
DUSTIN L. TACKETT

DIGITALLY SIGNED 9/2/22

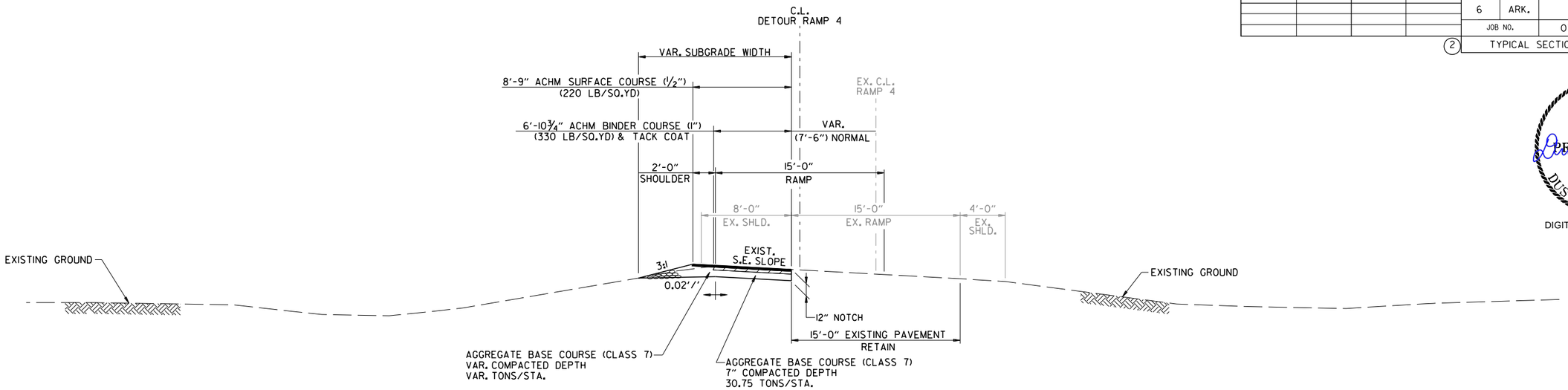

DETOUR RAMP 4 NOTCH AND WIDEN SUPERELEVATED SECTION

STA. 10+00.00 TO STA. 10+65.78

NOTE:
DIMENSIONS SHOWN REPRESENT AVERAGE WIDTHS. ACTUAL DIMENSIONS VARY WITHIN THE NOTCH AN WIDEN STATION RANGE.

NOTES:

REFER TO CROSS SECTIONS FOR DEVIATIONS FROM NORMAL SLOPES. NO CHANGES SHALL BE MADE FROM THE PLANNED SLOPES WITHOUT THE APPROVAL OF THE ENGINEER.

THE THICKNESS OF AGGREGATE BASE COURSE SHALL BE WITHIN PLUS OR MINUS ONE INCH OF THE PLAN THICKNESS SHOWN. THE CONTRACTOR WILL CORRECT ANY DEFICIENT THICKNESS THAT DOES NOT MEET THE TOLERANCE INDICATED. PAYMENT WILL NOT BE MADE FOR MATERIAL PLACED IN EXCESS OF THE TOLERANCE INDICATED.

THE FINAL 2" OF SURFACE COURSE IS TO BE PLACED AFTER ALL OTHER COURSES HAVE BEEN LAID. LONGITUDINAL JOINTS SHALL BE AT THE LANE LINES.

BLEEDER DITCHES - PRIOR TO AND DURING PLACEMENT OF PAVEMENT AT THE NOTCH, THE CONTRACTOR SHALL PROVIDE POSITIVE DRAINAGE AT ALL TIMES. THE METHOD(S) AND SPACING USED SHALL BE APPROVED BY THE ENGINEER. PAYMENT FOR THIS WORK SHALL BE CONSIDERED INCLUDED IN THE PRICE BID FOR THE VARIOUS CONTRACT ITEMS.

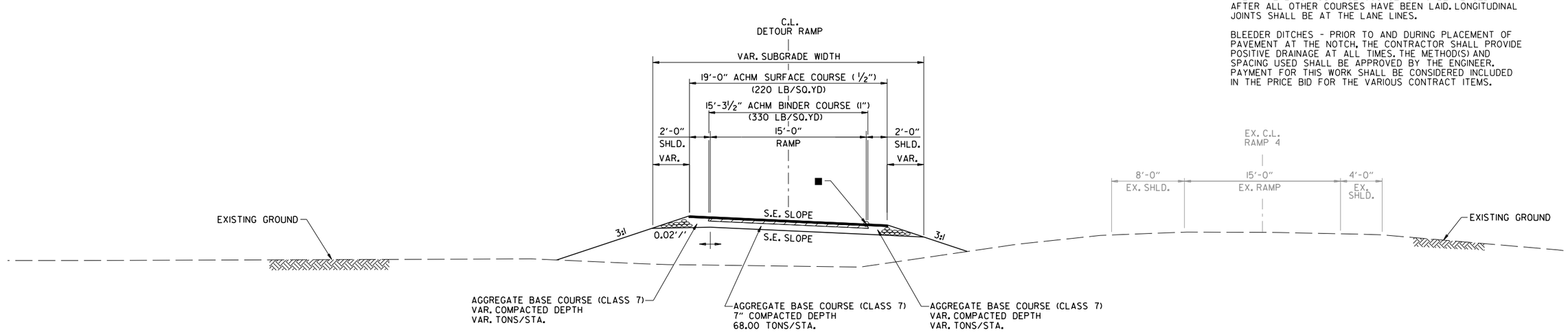

DETOUR RAMP 4 SUPERELEVATED SECTION

STA. 10+65.78 TO STA. 13+04.75

■ PROFILE GRADE AND POINT OF SUPERELEVATION ROTATION

TYPICAL SECTIONS OF IMPROVEMENT

DLTackett 9/2/2022 4:24:27 PM
WORKSPACE: AHTD
\\garverinc.local\gdata\Projects\2017\17017634 - 070513 I-30 Str-Apprs Hwy 5\Drawings\r070513_TYP.dgn
REVISED DATE:

DATE REVISED	DATE FILMED	DATE REVISED	DATE FILMED	FED.RD. DIST.NO.	STATE	FED.AID PROJ.NO.	SHEET NO.	TOTAL SHEETS
				6	ARK.			
				JOB NO.		070513	12	109

(2) TYPICAL SECTIONS OF IMPROVEMENT

STATE OF ARKANSAS
LICENSED PROFESSIONAL ENGINEER
No.14994
DUSTIN L. TACKETT

DIGITALLY SIGNED 9/2/22

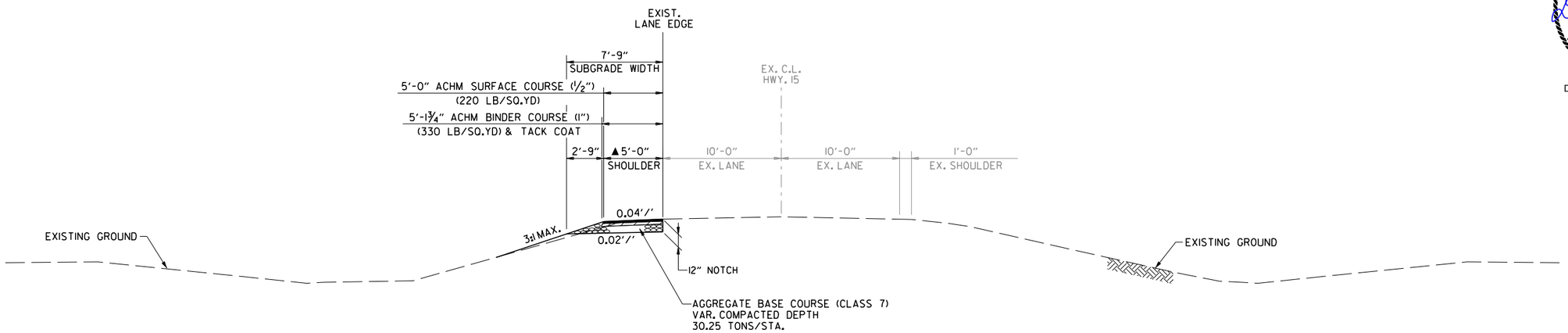

EXIST. HWY. 51 STAGE 1 FULL DEPTH SHOULDER

STA. 125+49.43 TO STA. 129+50.00 (C.L. HWY. 51 STATIONING)

▲ TRANSITION SHOULDER FROM 5'-0" AT STA. 128+50.00 TO 1'-0" AT STA. 129+50.00 (MATCH EXISTING SHOULDER)

NOTES:

REFER TO CROSS SECTIONS FOR DEVIATIONS FROM NORMAL SLOPES. NO CHANGES SHALL BE MADE FROM THE PLANNED SLOPES WITHOUT THE APPROVAL OF THE ENGINEER.

THE THICKNESS OF AGGREGATE BASE COURSE SHALL BE WITHIN PLUS OR MINUS ONE INCH OF THE PLAN THICKNESS SHOWN. THE CONTRACTOR WILL CORRECT ANY DEFICIENT THICKNESS THAT DOES NOT MEET THE TOLERANCE INDICATED. PAYMENT WILL NOT BE MADE FOR MATERIAL PLACED IN EXCESS OF THE TOLERANCE INDICATED.

THE FINAL 2" OF SURFACE COURSE IS TO BE PLACED AFTER ALL OTHER COURSES HAVE BEEN LAID. LONGITUDINAL JOINTS SHALL BE AT THE LANE LINES.

BLEEDER DITCHES - PRIOR TO AND DURING PLACEMENT OF PAVEMENT AT THE NOTCH, THE CONTRACTOR SHALL PROVIDE POSITIVE DRAINAGE AT ALL TIMES. THE METHOD(S) AND SPACING USED SHALL BE APPROVED BY THE ENGINEER. PAYMENT FOR THIS WORK SHALL BE CONSIDERED INCLUDED IN THE PRICE BID FOR THE VARIOUS CONTRACT ITEMS.

TYPICAL SECTIONS OF IMPROVEMENT

DLTackett 9/2/2022 4:24:28 PM
WORKSPACE: AHTD
\\garverinc.local\gdata\Projects\2017\17017634 - 070513 I-30 Str-Apprs Hwy 5\Drawings\r070513_TYP.dgn
REVISED DATE:

DATE REVISED	DATE FILMED	DATE REVISED	DATE FILMED	FED.RD. DIST.NO.	STATE	FED.AID PROJ.NO.	SHEET NO.	TOTAL SHEETS
				6	ARK.			
				JOB NO.		070513	13	109
				(2)	SPECIAL DETAILS			

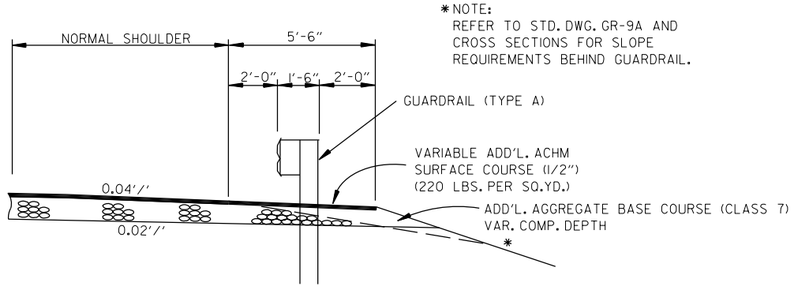

*NOTE:
REFER TO STD. DWG. GR-9A AND CROSS SECTIONS FOR SLOPE REQUIREMENTS BEHIND GUARDRAIL.

WIDENING FOR GUARDRAIL AT PROPOSED SHOULDER EDGE

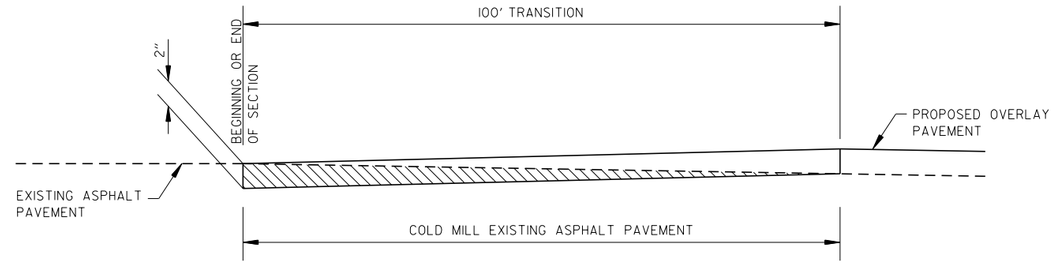

DETAIL FOR TRANSITIONS

STATE OF ARKANSAS
LICENSED PROFESSIONAL ENGINEER
No.14994
DUSTIN L. TACKETT
DIGITALLY SIGNED 9/2/22

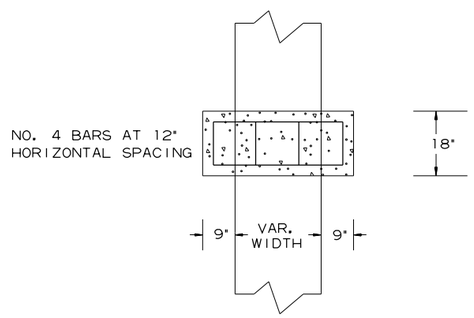

TOP VIEW

MIN. 3" COVER

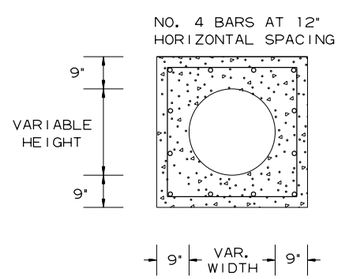

FRONT VIEW

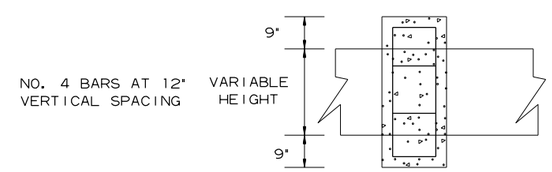

SIDE VIEW

SINGLE PIPE EXTENSION
REINFORCED CONCRETE COLLAR DETAIL

DLTackett 9/2/2022 4:24:28 PM
WORKSPACE: AHTD
L:\2017\1701634 - 070513 I-30 Str-Apprs Hwy 51\Drawings\r070513_SD_ALL.dgn
REVISED DATE:

DATE REVISED	DATE FILMED	DATE REVISED	DATE FILMED	FED.RD. DIST.NO.	STATE	FED.AID PROJ.NO.	SHEET NO.	TOTAL SHEETS
				6	ARK.			
				JOB NO.		070513	14	109

(2) SPECIAL DETAILS

STATE OF ARKANSAS
LICENSED PROFESSIONAL ENGINEER
No.14994
DUSTIN L. TACKETT

DIGITALLY SIGNED 9/2/22

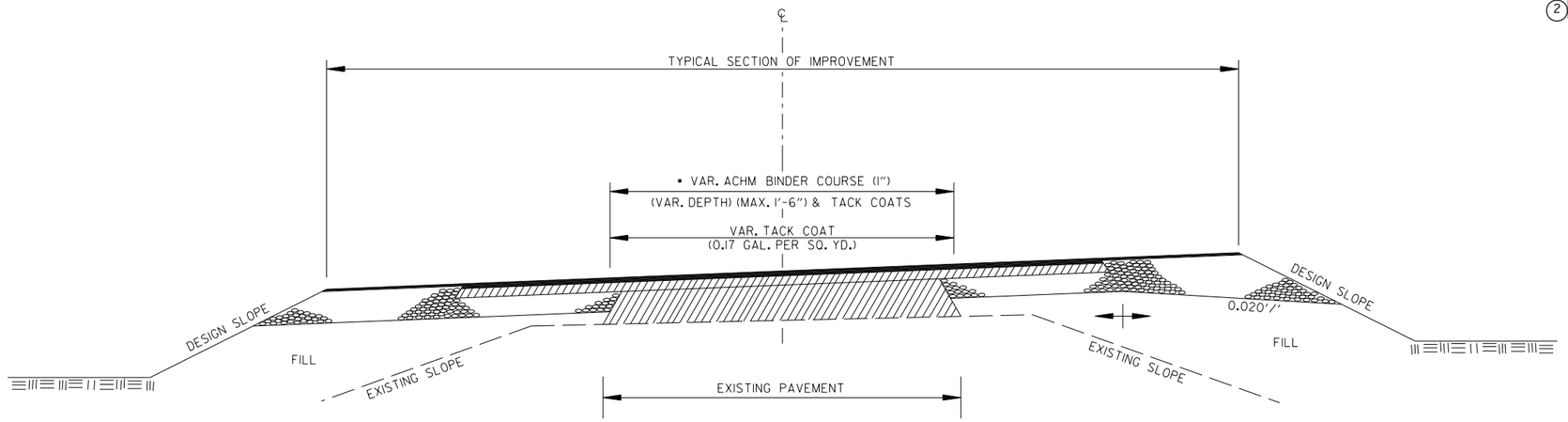

• 6" AGGREGATE BASE COURSE (CLASS 7)
TO BE REPLACED WITH ACHM BINDER COURSE (1")

METHOD OF RAISING GRADE

NOTES:

(1) THIS DETAIL TO BE USED ONLY IF AND WHERE DIRECTED BY THE ENGINEER.

(2) QUANTITIES FOR METHOD OF GRADE RAISE USING ASPHALT WERE CALCULATED ON THIS PROJECT AT LOCATIONS WHERE THE DISTANCE BETWEEN THE EXISTING ASPHALT ROADWAY AND THE PROPOSED SUBGRADE WAS ONE FOOT OR LESS.

(3) IN LOCATIONS WHERE THE DISTANCE BETWEEN THE PROPOSED SUBGRADE AND THE EXISTING ASPHALT ROADWAY IS MORE THAN ONE FOOT. SCARIFICATION OF THE EXISTING ASPHALT ROADWAY WILL BE REQUIRED AS STATED IN SECTION 210. SUBSSECTION 210.09 OF THE STANDARD SPECIFICATIONS.

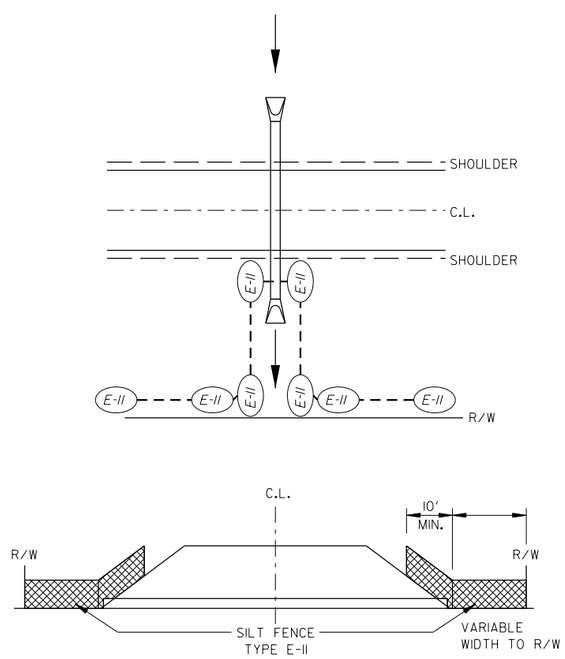

DETAILS OF SILT FENCE AT CROSS DRAINS

SPECIAL DETAILS

DLTackett 9/2/2022 4:24:28 PM
WORKSPACE: AHTD
L:\2017\017634 - 070513 I-30 Str-Apprs Hwy 51\Drawings\r070513_SD_ALL.dgn
REVISED DATE:

DATE REVISED	DATE FILMED	DATE REVISED	DATE FILMED	FED.RD. DIST.NO.	STATE	FED.AID PROJ.NO.	SHEET NO.	TOTAL SHEETS
				6	ARK.			
				JOB NO.		070513	15	109

(2) TEMPORARY EROSION CONTROL DETAILS

STATE OF ARKANSAS ★★★ LICENSED PROFESSIONAL ENGINEER ★★★ No.14994 DUSTIN L. TACKETT

DIGITALLY SIGNED 9/2/22

HWY. 51

SILT FENCE	(E-11)	LIN. FT.
STA. 107+00 TO 111+05	LT.	437

FILTER SOCK	(E-3)	INSTALLATION
STA. 108+92	LT.	1

SAND BAG DITCH CHECK	(E-5)	INSTALLATION
STA. 108+17	LT.	1
STA. 108+01	LT.	1
STA. 109+42	RT.	1
STA. 111+77	RT.	1

ROCK DITCH CHECK	(E-6)	INSTALLATION
STA. 107+42	LT.	1
STA. 107+42	RT.	1
STA. 108+92	LT.	1
STA. 108+92	RT.	1
STA. 114+07	LT.	1
STA. 115+80	RT.	1

RAMP 1

SILT FENCE	(E-11)	LIN. FT.
STA. 202+00 TO 203+95	RT.	195

SAND BAG DITCH CHECK	(E-5)	INSTALLATION
STA. 201+80	LT.	1
STA. 203+69	LT.	1

ROCK DITCH CHECK	(E-6)	INSTALLATION
STA. 201+80	RT.	1
STA. 202+18	LT.	1

I-30

SAND BAG DITCH CHECK	(E-5)	INSTALLATION
STA. 2612+50	RT.	1

ROCK DITCH CHECK	(E-6)	INSTALLATION
STA. 2611+82	RT.	1
STA. 2613+24	RT.	1

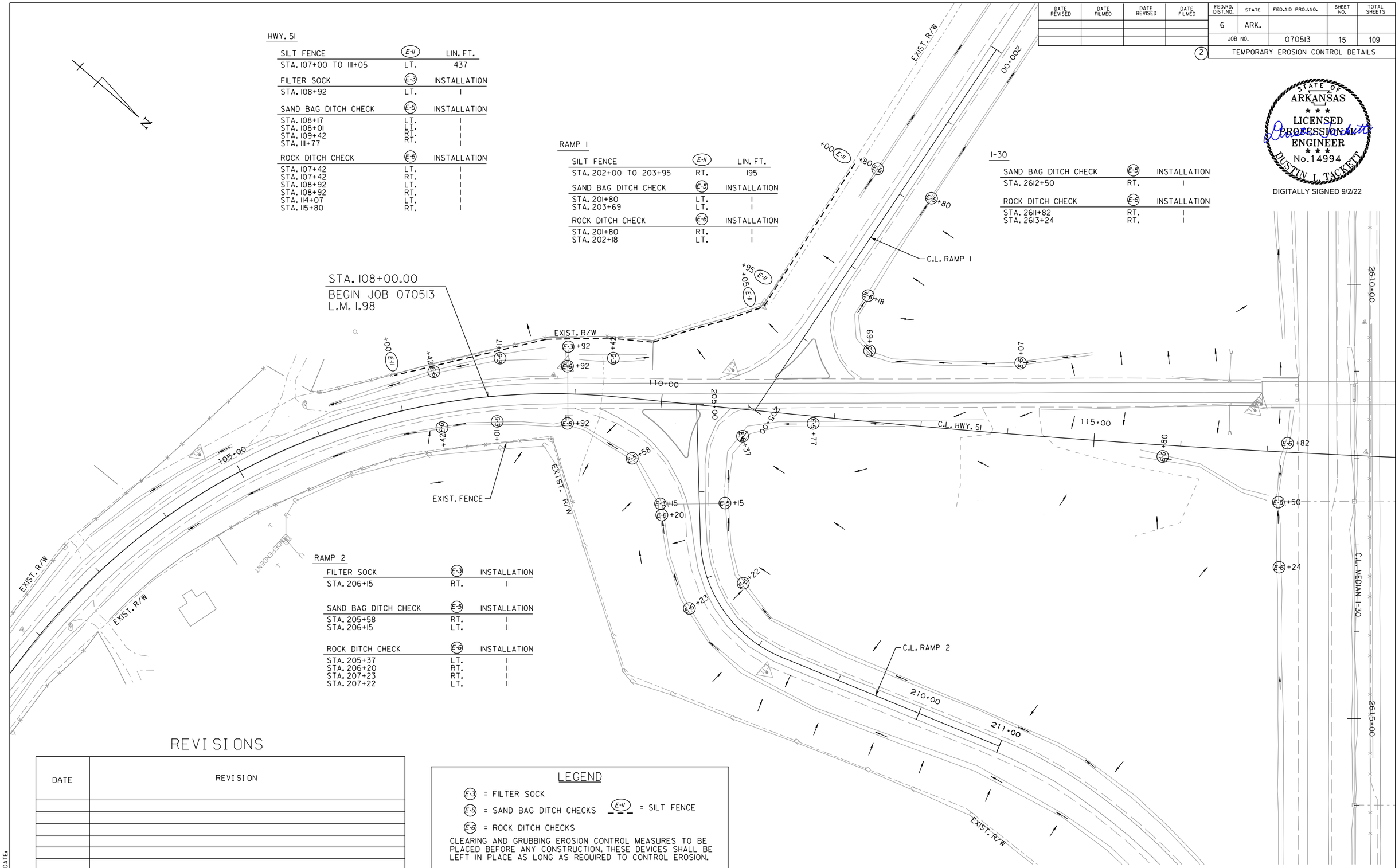

RAMP 2

FILTER SOCK	(E-3)	INSTALLATION
STA. 206+15	RT.	1

SAND BAG DITCH CHECK	(E-5)	INSTALLATION
STA. 205+58	RT.	1
STA. 206+15	LT.	1

ROCK DITCH CHECK	(E-6)	INSTALLATION
STA. 205+37	LT.	1
STA. 206+20	RT.	1
STA. 207+23	RT.	1
STA. 207+22	LT.	1

REVISIONS

DATE	REVISION

LEGEND

(E-3) = FILTER SOCK

(E-6) = SAND BAG DITCH CHECKS

(E-11) = SILT FENCE

(E-6) = ROCK DITCH CHECKS

CLEARING AND GRUBBING EROSION CONTROL MEASURES TO BE PLACED BEFORE ANY CONSTRUCTION. THESE DEVICES SHALL BE LEFT IN PLACE AS LONG AS REQUIRED TO CONTROL EROSION.

TEMPORARY EROSION CONTROL DETAILS
CLEARING AND GRUBBING

DLTackett 9/2/2022 4:24:32 PM
WORKSPACE: AHTD
L:\20\T\070634 - 070513 I-30 Str-Apprs Hwy 51\Drawings\r070513_EC_CG_01.dgn
REVISED DATE:

DATE REVISED	DATE FILMED	DATE REVISED	DATE FILMED	FED.RD. DIST.NO.	STATE	FED.AID PROJ.NO.	SHEET NO.	TOTAL SHEETS
				6	ARK.			
				JOB NO.		070513	16	109

(2) TEMPORARY EROSION CONTROL DETAILS

STATE OF ARKANSAS ★★★ LICENSED PROFESSIONAL ENGINEER ★★★ No.14994 DUSTIN L. TACKETT

DIGITALLY SIGNED 9/2/22

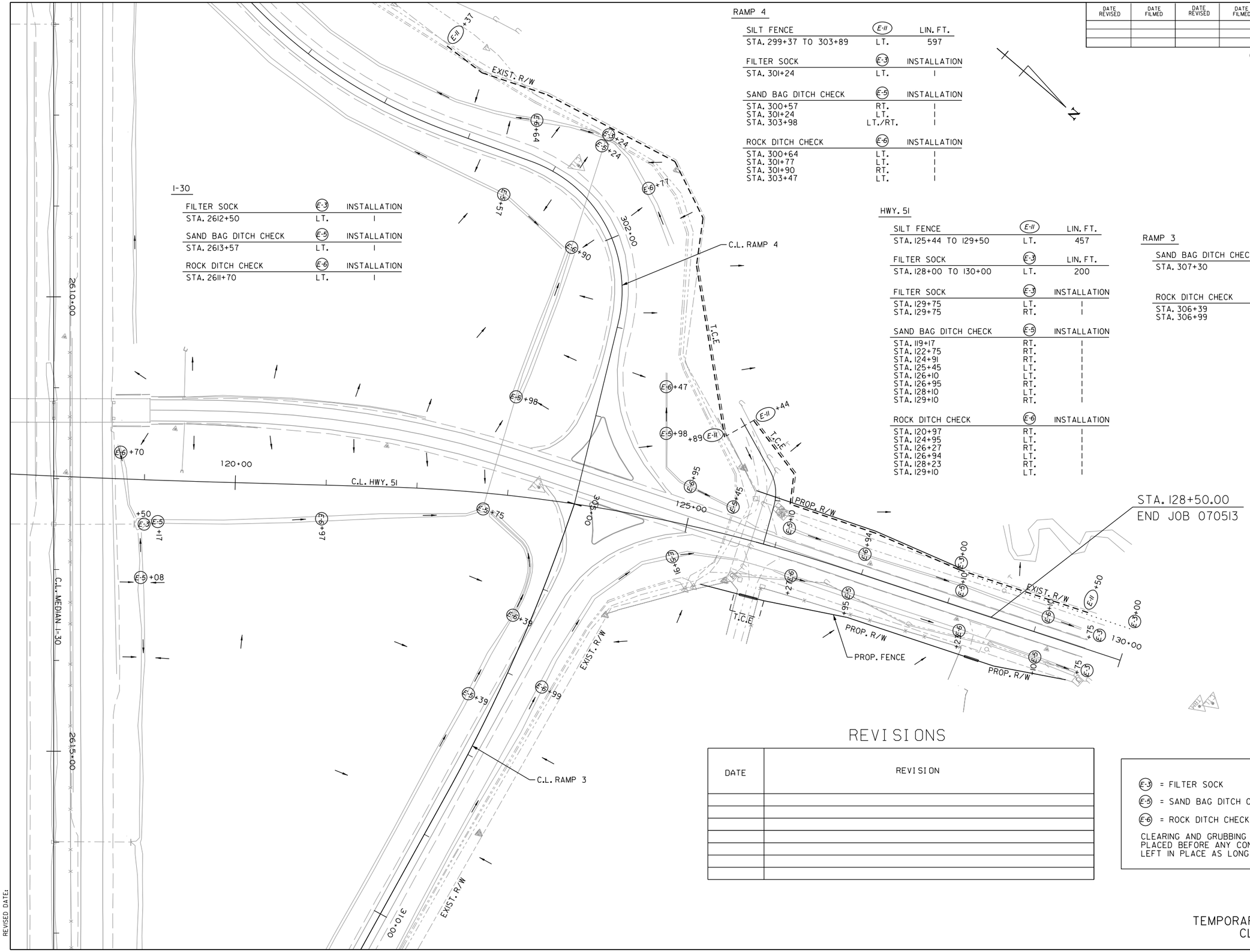

RAMP 4

SILT FENCE	E-11	LIN. FT.
STA. 299+37 TO 303+89	LT.	597

FILTER SOCK	E-3	INSTALLATION
STA. 301+24	LT.	1

SAND BAG DITCH CHECK	E-5	INSTALLATION
STA. 300+57	RT.	1
STA. 301+24	LT.	1
STA. 303+98	LT./RT.	1

ROCK DITCH CHECK	E-6	INSTALLATION
STA. 300+64	LT.	1
STA. 301+77	LT.	1
STA. 301+90	RT.	1
STA. 303+47	LT.	1

I-30

FILTER SOCK	E-3	INSTALLATION
STA. 2612+50	LT.	1

SAND BAG DITCH CHECK	E-5	INSTALLATION
STA. 2613+57	LT.	1

ROCK DITCH CHECK	E-6	INSTALLATION
STA. 2611+70	LT.	1

HWY. 51

SILT FENCE	E-11	LIN. FT.
STA. 125+44 TO 129+50	LT.	457

FILTER SOCK	E-3	LIN. FT.
STA. 128+00 TO 130+00	LT.	200

FILTER SOCK	E-3	INSTALLATION
STA. 129+75	LT.	1
STA. 129+75	RT.	1

SAND BAG DITCH CHECK	E-5	INSTALLATION
STA. 119+17	RT.	1
STA. 122+75	RT.	1
STA. 124+91	RT.	1
STA. 125+45	LT.	1
STA. 126+10	LT.	1
STA. 126+95	RT.	1
STA. 128+10	LT.	1
STA. 129+10	RT.	1

ROCK DITCH CHECK	E-6	INSTALLATION
STA. 120+97	RT.	1
STA. 124+95	LT.	1
STA. 126+27	RT.	1
STA. 126+94	LT.	1
STA. 128+23	RT.	1
STA. 129+10	LT.	1

RAMP 3

SAND BAG DITCH CHECK	E-5	INSTALLATION
STA. 307+30	RT.	1

ROCK DITCH CHECK	E-6	INSTALLATION
STA. 306+39	RT.	1
STA. 306+99	LT.	1

REVISIONS

DATE	REVISION

LEGEND

E-3 = FILTER SOCK

E-5 = SAND BAG DITCH CHECKS

E-6 = ROCK DITCH CHECKS

E-11 = SILT FENCE

CLEARING AND GRUBBING EROSION CONTROL MEASURES TO BE PLACED BEFORE ANY CONSTRUCTION. THESE DEVICES SHALL BE LEFT IN PLACE AS LONG AS REQUIRED TO CONTROL EROSION.

TEMPORARY EROSION CONTROL DETAILS
CLEARING AND GRUBBING

DLTackett 9/2/2022 4:24:32 PM
WORKSPACE: AHTD
L:\2017\170176 34 - 070513 I-30 Str-Apprs Hwy 51\Drawings\r070513.EC.CG.02.dgn
REVISED DATE:

DATE REVISED	DATE FILMED	DATE REVISED	DATE FILMED	FED.RD. DIST.NO.	STATE	FED.AID PROJ.NO.	SHEET NO.	TOTAL SHEETS
				6	ARK.			
				JOB NO.		070513	17	109

(2) TEMPORARY EROSION CONTROL DETAILS

STATE OF ARKANSAS ★★★ LICENSED PROFESSIONAL ENGINEER ★★★ No.14994 DUSTIN L. TACKETT

DIGITALLY SIGNED 9/2/22

HWY. 51

SILT FENCE	(E-11)	LIN. FT.
STA. 107+00 TO 111+05	LT.	RETAIN

SAND BAG DITCH CHECK	(E-5)	INSTALLATION
STA. 108+17	LT.	RETAIN
STA. 108+01	LT.	RETAIN
STA. 109+42	RT.	RETAIN
STA. 111+77	RT.	RETAIN

ROCK DITCH CHECK	(E-6)	INSTALLATION
STA. 107+42	LT.	RETAIN
STA. 107+42	RT.	RETAIN
STA. 108+92	LT.	RETAIN
STA. 108+92	RT.	RETAIN
STA. 114+07	LT.	RETAIN
STA. 115+80	RT.	RETAIN

RAMP 1

SILT FENCE	(E-11)	LIN. FT.
STA. 202+00 TO 203+95	RT.	RETAIN

SAND BAG DITCH CHECK	(E-5)	INSTALLATION
STA. 201+80	LT.	RETAIN
STA. 203+69	LT.	RETAIN

ROCK DITCH CHECK	(E-6)	INSTALLATION
STA. 201+80	RT.	RETAIN
STA. 202+18	LT.	RETAIN

I-30

SAND BAG DITCH CHECK	(E-5)	INSTALLATION
STA. 2612+50	RT.	RETAIN

ROCK DITCH CHECK	(E-6)	INSTALLATION
STA. 2611+82	RT.	RETAIN
STA. 2613+24	RT.	RETAIN

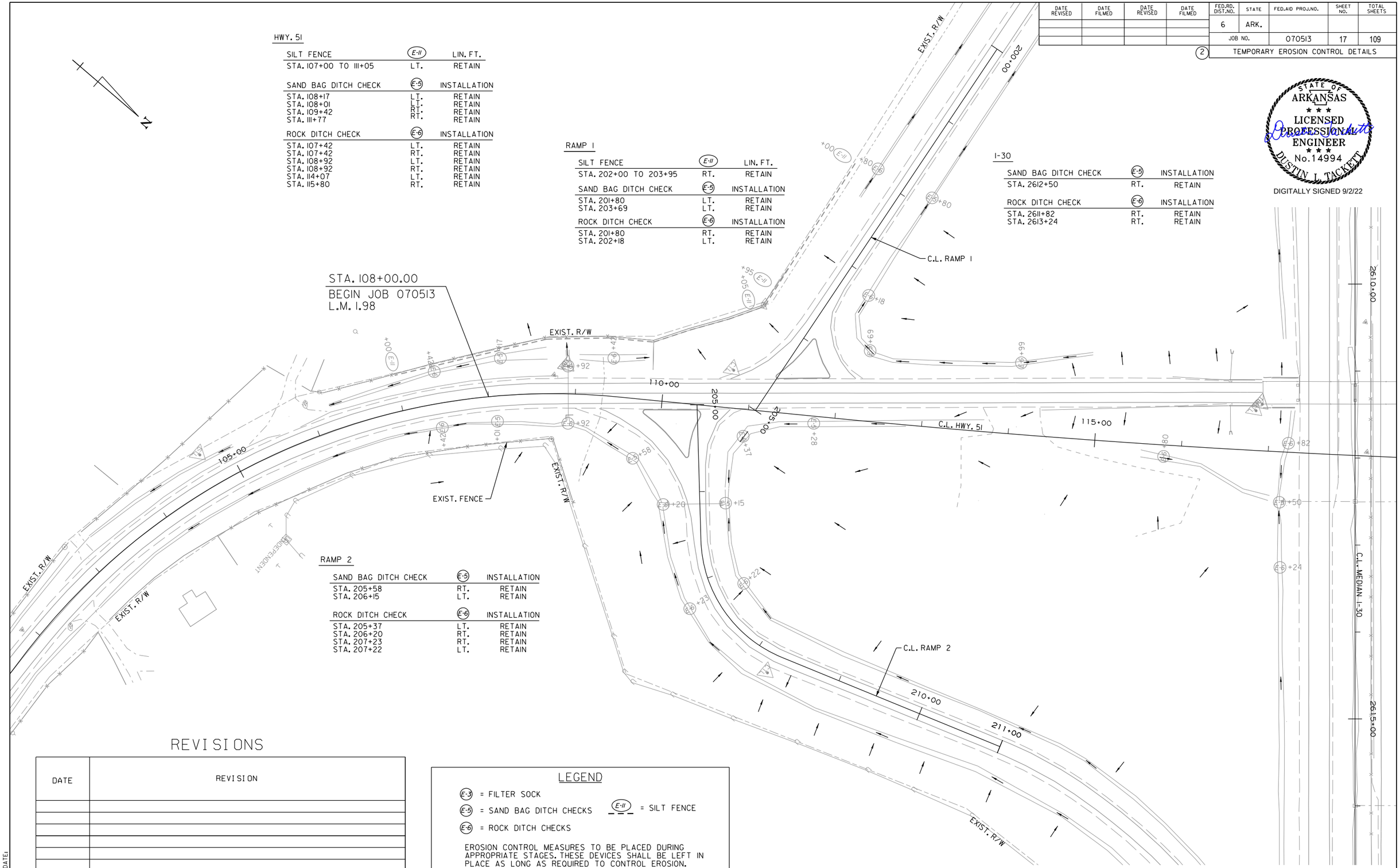

RAMP 2

SAND BAG DITCH CHECK	(E-5)	INSTALLATION
STA. 205+58	RT.	RETAIN
STA. 206+15	LT.	RETAIN

ROCK DITCH CHECK	(E-6)	INSTALLATION
STA. 205+37	LT.	RETAIN
STA. 206+20	RT.	RETAIN
STA. 207+23	RT.	RETAIN
STA. 207+22	LT.	RETAIN

REVISIONS

DATE	REVISION

LEGEND

(E-3) = FILTER SOCK

(E-5) = SAND BAG DITCH CHECKS

(E-6) = ROCK DITCH CHECKS

(E-11) = SILT FENCE

EROSION CONTROL MEASURES TO BE PLACED DURING APPROPRIATE STAGES. THESE DEVICES SHALL BE LEFT IN PLACE AS LONG AS REQUIRED TO CONTROL EROSION.

TEMPORARY EROSION CONTROL DETAILS
STAGE 1

DLTackett 9/2/2022 4:24:33 PM
WORKSPACE: AHTD
L:\20\170\7634 - 070513 I-30 Str-Apprs Hwy 5\Drawings\r070513_EC_STAGE 1.dgn
REVISED DATE:

DATE REVISED	DATE FILMED	DATE REVISED	DATE FILMED	FED.RD. DIST.NO.	STATE	FED.AID PROJ.NO.	SHEET NO.	TOTAL SHEETS
				6	ARK.			
				JOB NO.		070513	18	109

(2) TEMPORARY EROSION CONTROL DETAILS

STATE OF ARKANSAS ★★★ LICENSED PROFESSIONAL ENGINEER ★★★ No.14994 DUSTIN L. TACKETT

DIGITALLY SIGNED 9/2/22

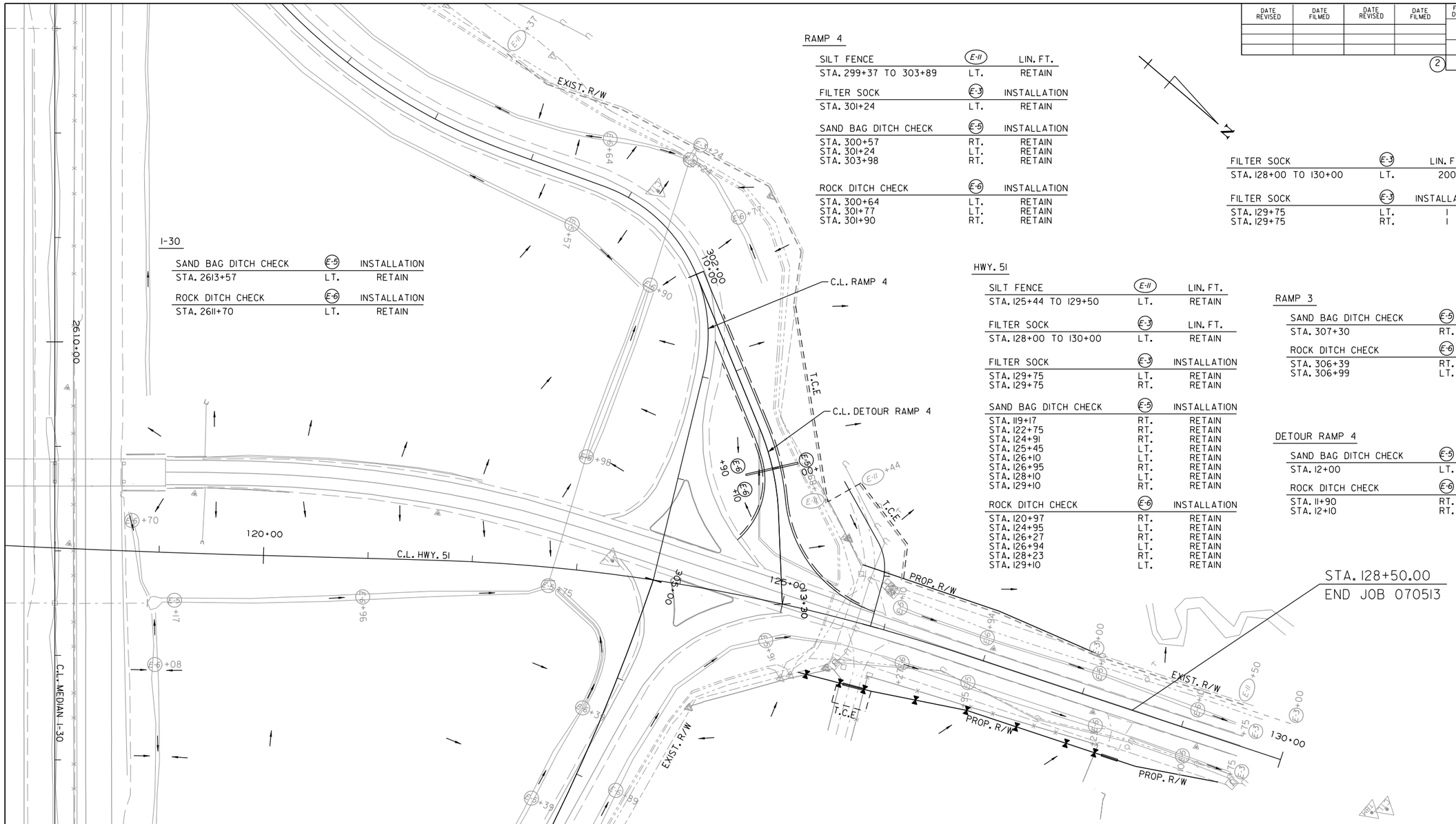

RAMP 4

SILT FENCE (E-11)		LIN. FT.
STA. 299+37 TO 303+89	LT.	RETAIN

FILTER SOCK (E-3)		INSTALLATION
STA. 301+24	LT.	RETAIN

SAND BAG DITCH CHECK (E-5)		INSTALLATION
STA. 300+57	RT.	RETAIN
STA. 301+24	LT.	RETAIN
STA. 303+98	RT.	RETAIN

ROCK DITCH CHECK (E-6)		INSTALLATION
STA. 300+64	LT.	RETAIN
STA. 301+77	LT.	RETAIN
STA. 301+90	RT.	RETAIN

I-30

SAND BAG DITCH CHECK (E-5)		INSTALLATION
STA. 2613+57	LT.	RETAIN

ROCK DITCH CHECK (E-6)		INSTALLATION
STA. 2611+70	LT.	RETAIN

FILTER SOCK (E-3)		LIN. FT.
STA. 128+00 TO 130+00	LT.	200

FILTER SOCK (E-3)		INSTALLATION
STA. 129+75	LT.	1
STA. 129+75	RT.	1

HWY. 51

SILT FENCE (E-11)		LIN. FT.
STA. 125+44 TO 129+50	LT.	RETAIN

FILTER SOCK (E-3)		LIN. FT.
STA. 128+00 TO 130+00	LT.	RETAIN

FILTER SOCK (E-3)		INSTALLATION
STA. 129+75	LT.	RETAIN
STA. 129+75	RT.	RETAIN

SAND BAG DITCH CHECK (E-5)		INSTALLATION
STA. 119+17	RT.	RETAIN
STA. 122+75	RT.	RETAIN
STA. 124+91	RT.	RETAIN
STA. 125+45	LT.	RETAIN
STA. 126+10	LT.	RETAIN
STA. 126+95	RT.	RETAIN
STA. 128+10	LT.	RETAIN
STA. 129+10	RT.	RETAIN

ROCK DITCH CHECK (E-6)		INSTALLATION
STA. 120+97	RT.	RETAIN
STA. 124+95	LT.	RETAIN
STA. 126+27	RT.	RETAIN
STA. 126+94	LT.	RETAIN
STA. 128+23	RT.	RETAIN
STA. 129+10	LT.	RETAIN

RAMP 3

SAND BAG DITCH CHECK (E-5)		INSTALLATION
STA. 307+30	RT.	RETAIN

ROCK DITCH CHECK (E-6)		INSTALLATION
STA. 306+39	RT.	RETAIN
STA. 306+99	LT.	RETAIN

DETOUR RAMP 4

SAND BAG DITCH CHECK (E-5)		INSTALLATION
STA. 12+00	LT.	1

ROCK DITCH CHECK (E-6)		INSTALLATION
STA. 11+90	RT.	1
STA. 12+10	RT.	1

REVISIONS

DATE	REVISION

LEGEND

(E-3) = FILTER SOCK

(E-5) = SAND BAG DITCH CHECKS

(E-11) = SILT FENCE

(E-6) = ROCK DITCH CHECKS

EROSION CONTROL MEASURES TO BE PLACED DURING APPROPRIATE STAGES. THESE DEVICES SHALL BE LEFT IN PLACE AS LONG AS REQUIRED TO CONTROL EROSION.

TEMPORARY EROSION CONTROL DETAILS
STAGE 1

DLTackett 9/2/2022 4:24:34 PM
WORKSPACE: AHTD
L:\20\N\70\7634 - 070513 I-30 Str-Apprs Hwy 51\Drawings\r070513.EC_STAGE 1_2.dgn
REVISED DATE:

DATE REVISED	DATE FILMED	DATE REVISED	DATE FILMED

FED.RD. DIST.NO.	STATE	FED.AID PROJ.NO.	SHEET NO.	TOTAL SHEETS
6	ARK.			
JOB NO.		070513	19	109

(2) TEMPORARY EROSION CONTROL DETAILS

STATE OF ARKANSAS ★★★ LICENSED PROFESSIONAL ENGINEER ★★★ No.14994 DUSTIN L. TACKETT

DIGITALLY SIGNED 9/2/22

HWY. 51

SILT FENCE	(E-11)	LIN. FT.
STA. 107+00 TO 111+05	LT.	RETAIN

SAND BAG DITCH CHECK	(E-5)	INSTALLATION
STA. 108+17	LT.	RETAIN
STA. 108+92	RT.	1
STA. 108+92	LT.	1
STA. 115+15	RT.	1
STA. 116+15	RT.	1

ROCK DITCH CHECK	(E-6)	INSTALLATION
STA. 107+42	LT.	RETAIN
STA. 108+01	RT.	1
STA. 109+42	LT.	RETAIN
STA. 112+50	RT.	1
STA. 114+07	LT.	RETAIN
STA. 115+00	LT.	1

DIVERSION DITCH	(E-8)	LIN. FT.
STA. 114+50 TO 117+00	RT.	200

SLOPE DRAIN	(E-12)	LIN. FT.
STA. 114+50	RT.	10

DUMPED RIPRAP	(E-12)	CU. YD.
STA. 114+50	RT.	2

RAMP 1

SILT FENCE	(E-11)	LIN. FT.
STA. 202+00 TO 203+95	RT.	RETAIN

SAND BAG DITCH CHECK	(E-5)	INSTALLATION
STA. 203+69	LT.	RETAIN
STA. 201+80	LT.	RETAIN

ROCK DITCH CHECK	(E-6)	INSTALLATION
STA. 201+80	RT.	RETAIN
STA. 202+18	LT.	RETAIN

I-30

SAND BAG DITCH CHECK	(E-5)	INSTALLATION
STA. 2612+50	RT.	1

ROCK DITCH CHECK	(E-6)	INSTALLATION
STA. 2613+24	RT.	RETAIN

RAMP 2

SAND BAG DITCH CHECK	(E-5)	INSTALLATION
STA. 206+14	LT.	1
STA. 206+79	RT.	1
STA. 208+43	RT.	1

ROCK DITCH CHECK	(E-6)	INSTALLATION
STA. 205+37	LT.	1
STA. 205+60	RT.	1
STA. 207+58	LT.	1
STA. 207+76	RT.	1

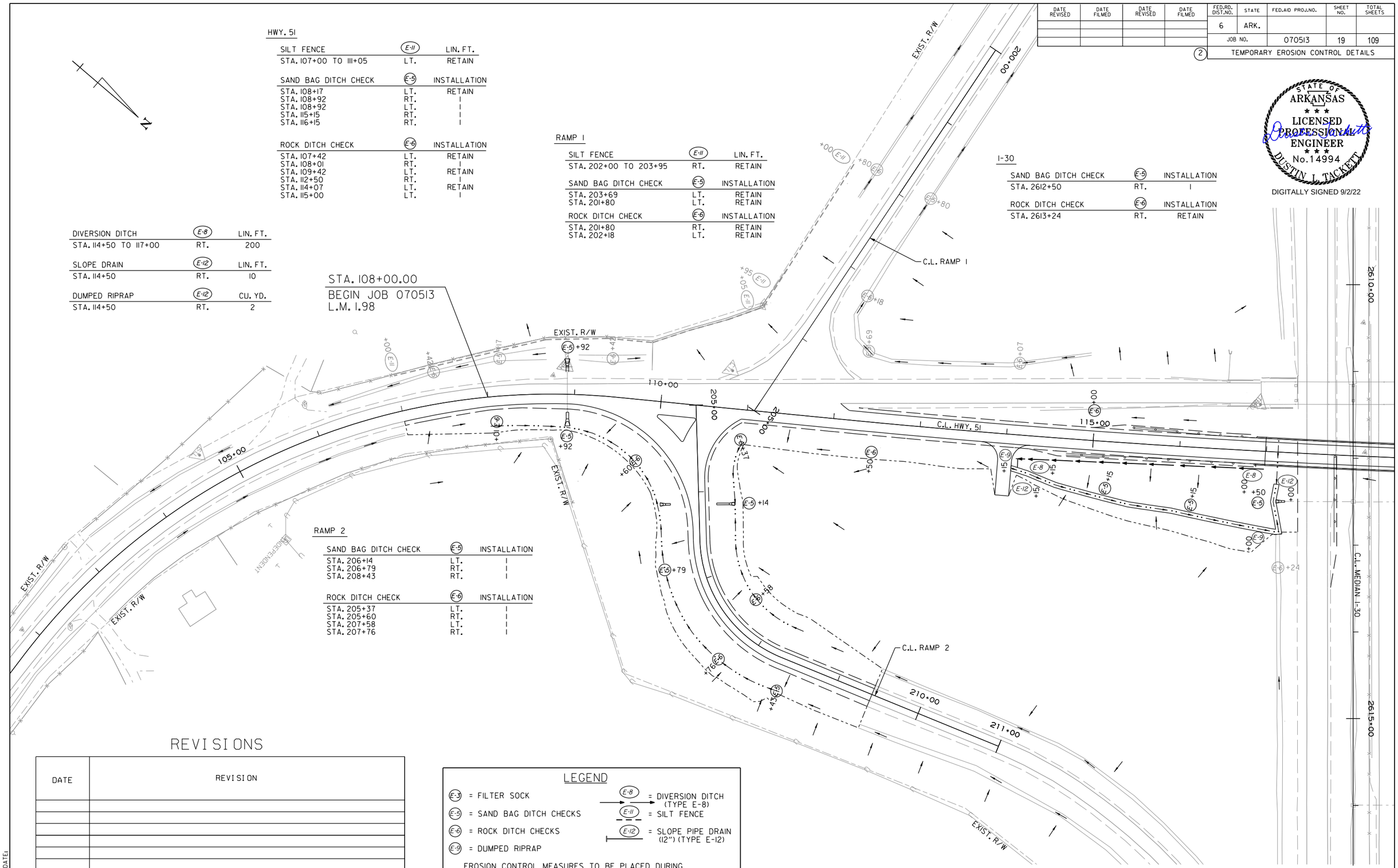

REVISIONS

DATE	REVISION

LEGEND

- (E-3) = FILTER SOCK
- (E-5) = SAND BAG DITCH CHECKS
- (E-6) = ROCK DITCH CHECKS
- (E-9) = DUMPED RIPRAP
- (E-8) = DIVERSION DITCH (TYPE E-8)
- (E-11) = SILT FENCE
- (E-12) = SLOPE PIPE DRAIN (12") (TYPE E-12)

EROSION CONTROL MEASURES TO BE PLACED DURING APPROPRIATE STAGES. THESE DEVICES SHALL BE LEFT IN PLACE AS LONG AS REQUIRED TO CONTROL EROSION.

TEMPORARY EROSION CONTROL DETAILS
STAGE 2

DLTackett 9/2/2022 4:24:35 PM
WORKSPACE: AHTD
L:\2017\701634 - 070513 I-30 Str-Apprs Hwy 51\Drawings\r070513_EC_STAGE 2.1.dgn
REVISED DATE:

DATE REVISED	DATE FILMED	DATE REVISED	DATE FILMED	FED.RD. DIST.NO.	STATE	FED.AID PROJ.NO.	SHEET NO.	TOTAL SHEETS
				6	ARK.			
				JOB NO.		070513	20	109

(2) TEMPORARY EROSION CONTROL DETAILS

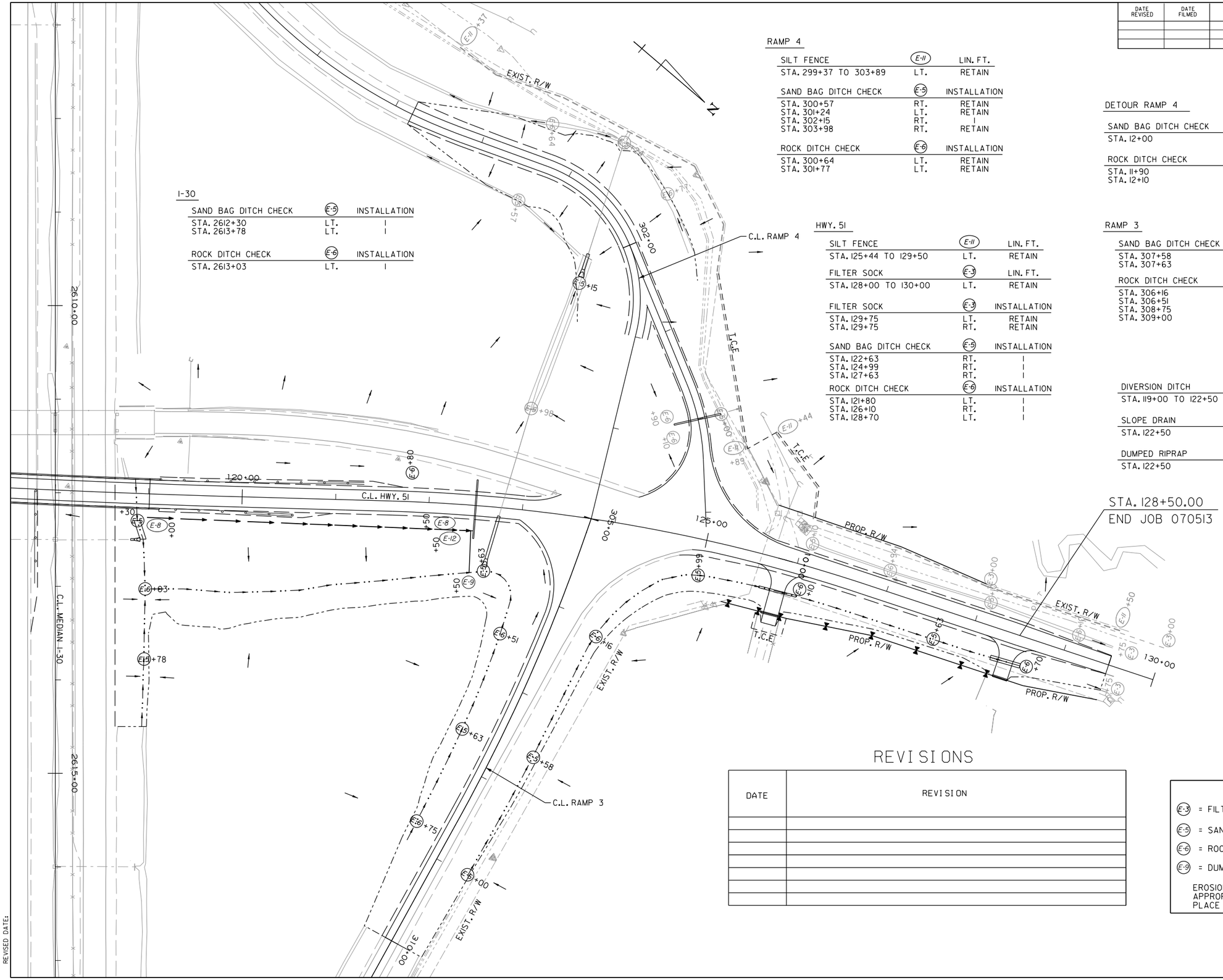

RAMP 4

SILT FENCE	E-11	LIN. FT.
STA. 299+37 TO 303+89	LT.	RETAIN

SAND BAG DITCH CHECK	E-5	INSTALLATION
STA. 300+57	RT.	RETAIN
STA. 301+24	LT.	RETAIN
STA. 302+15	RT.	I
STA. 303+98	RT.	RETAIN

ROCK DITCH CHECK	E-6	INSTALLATION
STA. 300+64	LT.	RETAIN
STA. 301+77	LT.	RETAIN

I-30

SAND BAG DITCH CHECK	E-5	INSTALLATION
STA. 2612+30	LT.	I
STA. 2613+78	LT.	I

ROCK DITCH CHECK	E-6	INSTALLATION
STA. 2613+03	LT.	I

HWY. 51

SILT FENCE	E-11	LIN. FT.
STA. 125+44 TO 129+50	LT.	RETAIN

FILTER SOCK	E-3	LIN. FT.
STA. 128+00 TO 130+00	LT.	RETAIN

FILTER SOCK	E-3	INSTALLATION
STA. 129+75	LT.	RETAIN
STA. 129+75	RT.	RETAIN

SAND BAG DITCH CHECK	E-5	INSTALLATION
STA. 122+63	RT.	I
STA. 124+99	RT.	I
STA. 127+63	RT.	I

ROCK DITCH CHECK	E-6	INSTALLATION
STA. 121+80	LT.	I
STA. 126+10	RT.	I
STA. 128+70	LT.	I

DETOUR RAMP 4

SAND BAG DITCH CHECK	E-5	INSTALLATION
STA. 12+00	LT.	RETAIN

ROCK DITCH CHECK	E-6	INSTALLATION
STA. 11+90	RT.	RETAIN
STA. 12+10	RT.	RETAIN

STATE OF ARKANSAS
LICENSED PROFESSIONAL ENGINEER
No. 14994
DUSTIN L. TACKETT

DIGITALLY SIGNED 9/2/22

RAMP 3

SAND BAG DITCH CHECK	E-5	INSTALLATION
STA. 307+58	LT.	I
STA. 307+63	RT.	I

ROCK DITCH CHECK	E-6	INSTALLATION
STA. 306+16	LT.	I
STA. 306+51	RT.	I
STA. 308+75	RT.	I
STA. 309+00	LT.	I

DIVERSION DITCH	E-8	LIN. FT.
STA. 119+00 TO 122+50	RT.	350

SLOPE DRAIN	E-12	LIN. FT.
STA. 122+50	RT.	45

DUMPED RIPRAP	E-12	CU. YD.
STA. 122+50	RT.	2

REVISIONS

DATE	REVISION

LEGEND

- E-3 = FILTER SOCK
- E-5 = SAND BAG DITCH CHECKS
- E-6 = ROCK DITCH CHECKS
- E-9 = DUMPED RIPRAP
- E-8 = DIVERSION DITCH (TYPE E-8)
- E-11 = SILT FENCE
- E-12 = SLOPE PIPE DRAIN (12") (TYPE E-12)

EROSION CONTROL MEASURES TO BE PLACED DURING APPROPRIATE STAGES. THESE DEVICES SHALL BE LEFT IN PLACE AS LONG AS REQUIRED TO CONTROL EROSION.

TEMPORARY EROSION CONTROL DETAILS
STAGE 2

DLTackett 9/2/2022 4:24:36 PM
WORKSPACE: AHTD
L:\2017\170176\34 - 070513 I-30 Str-Apprs Hwy 51\Drawings\r070513.EC.STAGE 2.2.dgn
REVISED DATE:

DATE REVISED	DATE FILMED	DATE REVISED	DATE FILMED

FED.RD. DIST.NO.	STATE	FED.AID PROJ.NO.	SHEET NO.	TOTAL SHEETS
6	ARK.			
JOB NO.		070513	21	109

(2) TEMPORARY EROSION CONTROL DETAILS

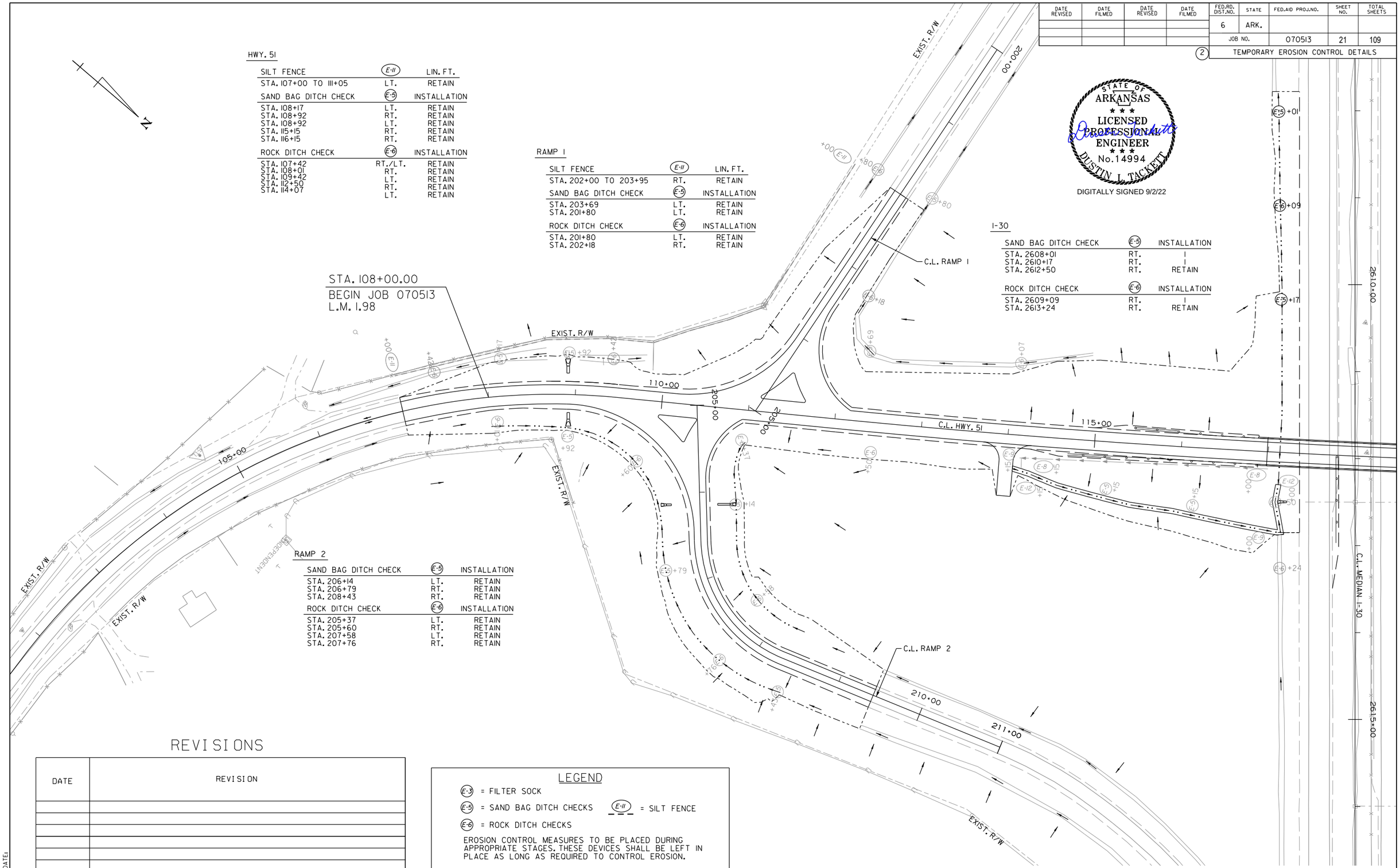

HWY. 51

SILT FENCE	E-11	LIN. FT.
STA. 107+00 TO 111+05	LT.	RETAIN
SAND BAG DITCH CHECK	**E-5**	**INSTALLATION**
STA. 108+17	LT.	RETAIN
STA. 108+92	RT.	RETAIN
STA. 108+92	LT.	RETAIN
STA. 115+15	RT.	RETAIN
STA. 116+15	RT.	RETAIN
ROCK DITCH CHECK	**E-6**	**INSTALLATION**
STA. 107+42	RT./LT.	RETAIN
STA. 108+01	RT.	RETAIN
STA. 109+42	LT.	RETAIN
STA. 112+50	RT.	RETAIN
STA. 114+07	LT.	RETAIN

RAMP 1

SILT FENCE	E-11	LIN. FT.
STA. 202+00 TO 203+95	RT.	RETAIN
SAND BAG DITCH CHECK	**E-5**	**INSTALLATION**
STA. 203+69	LT.	RETAIN
STA. 201+80	LT.	RETAIN
ROCK DITCH CHECK	**E-6**	**INSTALLATION**
STA. 201+80	LT.	RETAIN
STA. 202+18	RT.	RETAIN

I-30

SAND BAG DITCH CHECK	E-5	INSTALLATION
STA. 2608+01	RT.	I
STA. 2610+17	RT.	I
STA. 2612+50	RT.	RETAIN
ROCK DITCH CHECK	**E-6**	**INSTALLATION**
STA. 2609+09	RT.	I
STA. 2613+24	RT.	RETAIN

RAMP 2

SAND BAG DITCH CHECK	E-5	INSTALLATION
STA. 206+14	LT.	RETAIN
STA. 206+79	RT.	RETAIN
STA. 208+43	RT.	RETAIN
ROCK DITCH CHECK	**E-6**	**INSTALLATION**
STA. 205+37	LT.	RETAIN
STA. 205+60	RT.	RETAIN
STA. 207+58	LT.	RETAIN
STA. 207+76	RT.	RETAIN

REVISIONS

DATE	REVISION

LEGEND

E-3 = FILTER SOCK

E-5 = SAND BAG DITCH CHECKS E-11 = SILT FENCE

E-6 = ROCK DITCH CHECKS

EROSION CONTROL MEASURES TO BE PLACED DURING APPROPRIATE STAGES. THESE DEVICES SHALL BE LEFT IN PLACE AS LONG AS REQUIRED TO CONTROL EROSION.

TEMPORARY EROSION CONTROL DETAILS
STAGE 3

DLTackett 9/2/2022 4:24:37 PM
WORKSPACE: AHTD
L:\2017\1701634 - 070513 I-30 Str-Apprs Hwy 51\Drawings\r070513_EC_STAGE 3A.I.dgn
REVISED DATE:

DATE REVISED	DATE FILMED	DATE REVISED	DATE FILMED	FED.RD. DIST.NO.	STATE	FED.AID PROJ.NO.	SHEET NO.	TOTAL SHEETS
				6	ARK.			
				JOB NO.		070513	22	109

(2) TEMPORARY EROSION CONTROL DETAILS

STATE OF ARKANSAS
LICENSED PROFESSIONAL ENGINEER
No.14994
DUSTIN L. TACKETT

DIGITALLY SIGNED 9/2/22

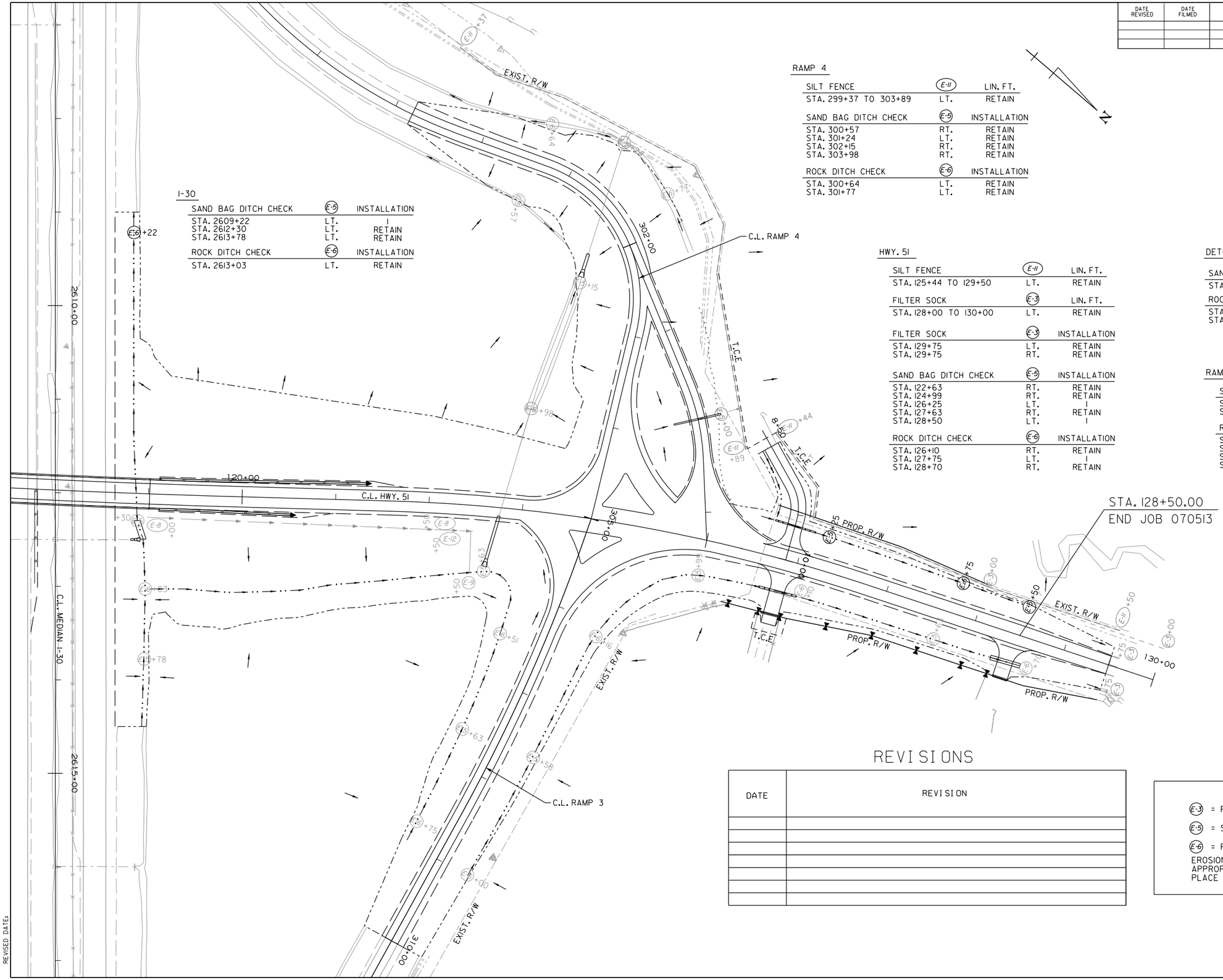

I-30

SAND BAG DITCH CHECK	(E-5)	INSTALLATION
STA. 2609+22	LT.	I
STA. 2612+30	LT.	RETAIN
STA. 2613+78	LT.	RETAIN
ROCK DITCH CHECK	(E-6)	INSTALLATION
STA. 2613+03	LT.	RETAIN

RAMP 4

SILT FENCE	(E-11)	LIN. FT.
STA. 299+37 TO 303+89	LT.	RETAIN
SAND BAG DITCH CHECK	(E-5)	INSTALLATION
STA. 300+57	RT.	RETAIN
STA. 301+24	LT.	RETAIN
STA. 302+15	RT.	RETAIN
STA. 303+98	RT.	RETAIN
ROCK DITCH CHECK	(E-6)	INSTALLATION
STA. 300+64	LT.	RETAIN
STA. 301+77	LT.	RETAIN

HWY. 51

SILT FENCE	(E-11)	LIN. FT.
STA. 125+44 TO 129+50	LT.	RETAIN
FILTER SOCK	(E-3)	LIN. FT.
STA. 128+00 TO 130+00	LT.	RETAIN
FILTER SOCK	(E-3)	INSTALLATION
STA. 129+75	LT.	RETAIN
STA. 129+75	RT.	RETAIN
SAND BAG DITCH CHECK	(E-5)	INSTALLATION
STA. 122+63	RT.	RETAIN
STA. 124+99	RT.	RETAIN
STA. 126+25	LT.	I
STA. 127+63	RT.	RETAIN
STA. 128+50	LT.	I
ROCK DITCH CHECK	(E-6)	INSTALLATION
STA. 126+10	RT.	RETAIN
STA. 127+75	LT.	I
STA. 128+70	RT.	RETAIN

DETOUR RAMP 4

SAND BAG DITCH CHECK	(E-5)	INSTALLATION
STA. 12+00	LT.	RETAIN
ROCK DITCH CHECK	(E-6)	INSTALLATION
STA. 11+90	RT.	RETAIN
STA. 12+10	RT.	RETAIN

RAMP 3

SAND BAG DITCH CHECK	(E-5)	INSTALLATION
STA. 307+63	RT.	RETAIN
STA. 307+58	LT.	RETAIN
ROCK DITCH CHECK	(E-6)	INSTALLATION
STA. 306+16	LT.	RETAIN
STA. 306+51	RT.	RETAIN
STA. 308+75	RT.	RETAIN
STA. 309+00	LT.	RETAIN

REVISIONS

DATE	REVISION

LEGEND

(E-3) = FILTER SOCK

(E-5) = SAND BAG DITCH CHECKS

(E-11) = SILT FENCE

(E-6) = ROCK DITCH CHECKS

EROSION CONTROL MEASURES TO BE PLACED DURING APPROPRIATE STAGES. THESE DEVICES SHALL BE LEFT IN PLACE AS LONG AS REQUIRED TO CONTROL EROSION.

TEMPORARY EROSION CONTROL DETAILS
STAGE 3A

DLTackett 9/2/2022 4:24:38 PM
WORKSPACE: AHTD
L:\2017\7017634 - 070513 I-30 Str-Apprs Hwy 51\Drawings\r070513_EC_STAGE 3A_2.dgn
REVISED DATE:

DATE REVISED	DATE FILMED	DATE REVISED	DATE FILMED	FED.RD. DIST.NO.	STATE	FED.AID PROJ.NO.	SHEET NO.	TOTAL SHEETS
				6	ARK.			
				JOB NO.		070513	23	109

(2) TEMPORARY EROSION CONTROL DETAILS

STATE OF ARKANSAS ★★★ LICENSED PROFESSIONAL ENGINEER ★★★ No.14994 DUSTIN L. TACKETT

DIGITALLY SIGNED 9/2/22

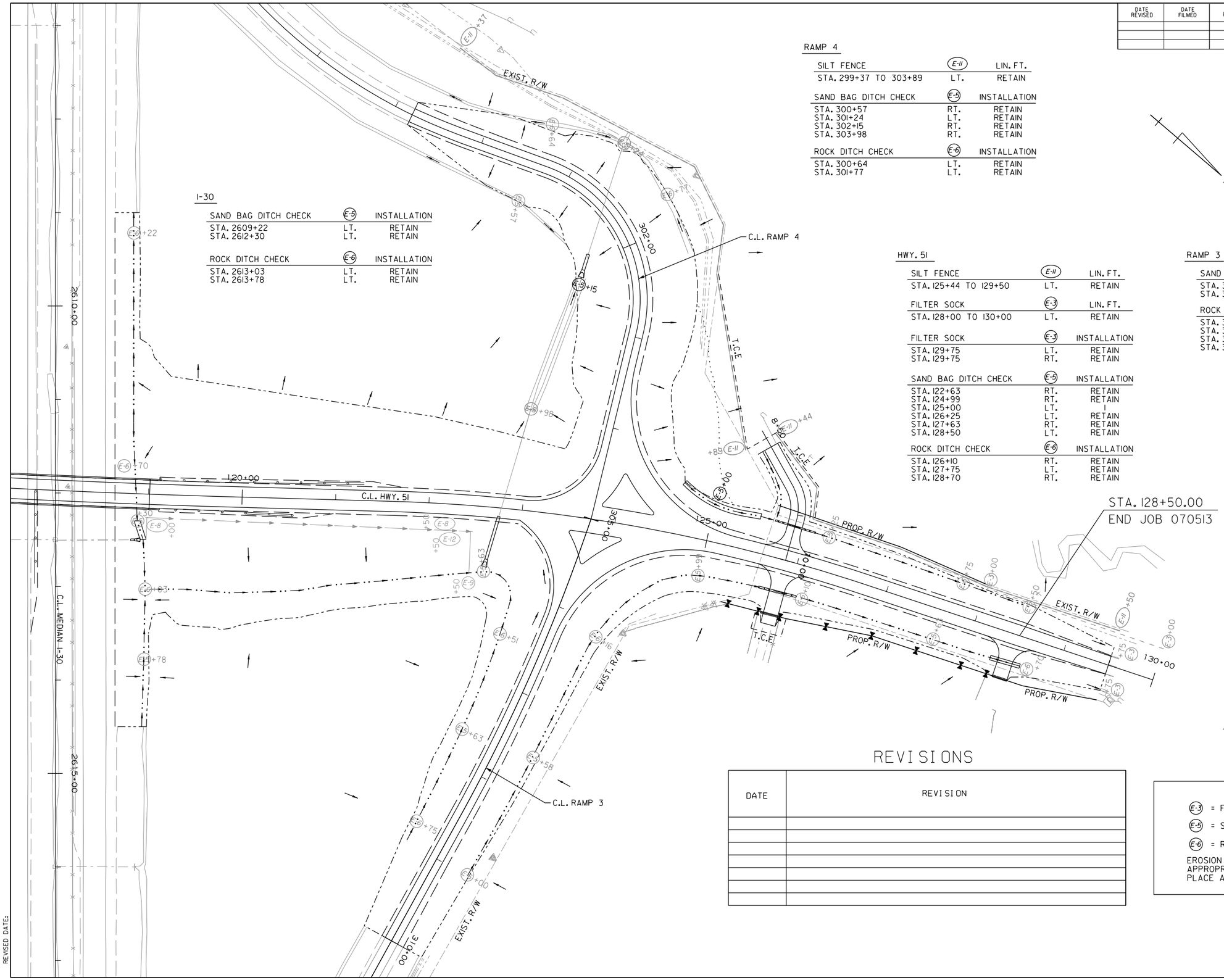

I-30

SAND BAG DITCH CHECK	(E-5)	INSTALLATION
STA. 2609+22	LT.	RETAIN
STA. 2612+30	LT.	RETAIN

ROCK DITCH CHECK	(E-6)	INSTALLATION
STA. 2613+03	LT.	RETAIN
STA. 2613+78	LT.	RETAIN

RAMP 4

SILT FENCE	(E-11)	LIN. FT.
STA. 299+37 TO 303+89	LT.	RETAIN

SAND BAG DITCH CHECK	(E-5)	INSTALLATION
STA. 300+57	RT.	RETAIN
STA. 301+24	LT.	RETAIN
STA. 302+15	RT.	RETAIN
STA. 303+98	RT.	RETAIN

ROCK DITCH CHECK	(E-6)	INSTALLATION
STA. 300+64	LT.	RETAIN
STA. 301+77	LT.	RETAIN

HWY. 51

SILT FENCE	(E-11)	LIN. FT.
STA. 125+44 TO 129+50	LT.	RETAIN

FILTER SOCK	(E-3)	LIN. FT.
STA. 128+00 TO 130+00	LT.	RETAIN

FILTER SOCK	(E-3)	INSTALLATION
STA. 129+75	LT.	RETAIN
STA. 129+75	RT.	RETAIN

SAND BAG DITCH CHECK	(E-5)	INSTALLATION
STA. 122+63	RT.	RETAIN
STA. 124+99	RT.	RETAIN
STA. 125+00	LT.	I
STA. 126+25	LT.	RETAIN
STA. 127+63	RT.	RETAIN
STA. 128+50	LT.	RETAIN

ROCK DITCH CHECK	(E-6)	INSTALLATION
STA. 126+10	RT.	RETAIN
STA. 127+75	LT.	RETAIN
STA. 128+70	RT.	RETAIN

RAMP 3

SAND BAG DITCH CHECK	(E-5)	INSTALLATION
STA. 306+63	RT.	RETAIN
STA. 307+58	LT.	RETAIN

ROCK DITCH CHECK	(E-6)	INSTALLATION
STA. 306+16	LT.	RETAIN
STA. 306+51	RT.	RETAIN
STA. 308+75	RT.	RETAIN
STA. 309+00	LT.	RETAIN

REVISIONS

DATE	REVISION

LEGEND

(E-3) = FILTER SOCK

(E-5) = SAND BAG DITCH CHECKS

(E-11) = SILT FENCE

(E-6) = ROCK DITCH CHECKS

EROSION CONTROL MEASURES TO BE PLACED DURING APPROPRIATE STAGES. THESE DEVICES SHALL BE LEFT IN PLACE AS LONG AS REQUIRED TO CONTROL EROSION.

TEMPORARY EROSION CONTROL DETAILS
STAGE 3B

DLTackett 9/2/2022 4:24:39 PM
WORKSPACE: AHTD
L:\2017\170176\34 - 070513 I-30 Str-Appr's Hwy 51\Drawings\r070513.EC.STAGE 3B.2.dgn
REVISED DATE:

DATE REVISED	DATE FILMED	DATE REVISED	DATE FILMED	FED.RD. DIST.NO.	STATE	FED.AID PROJ.NO.	SHEET NO.	TOTAL SHEETS
				6	ARK.			
				JOB NO.		070513	24	109

(2) MAINTENANCE OF TRAFFIC DETAILS

STATE OF ARKANSAS
LICENSED PROFESSIONAL ENGINEER
No.14994
DUSTIN L. TACKETT

DIGITALLY SIGNED 9/2/22

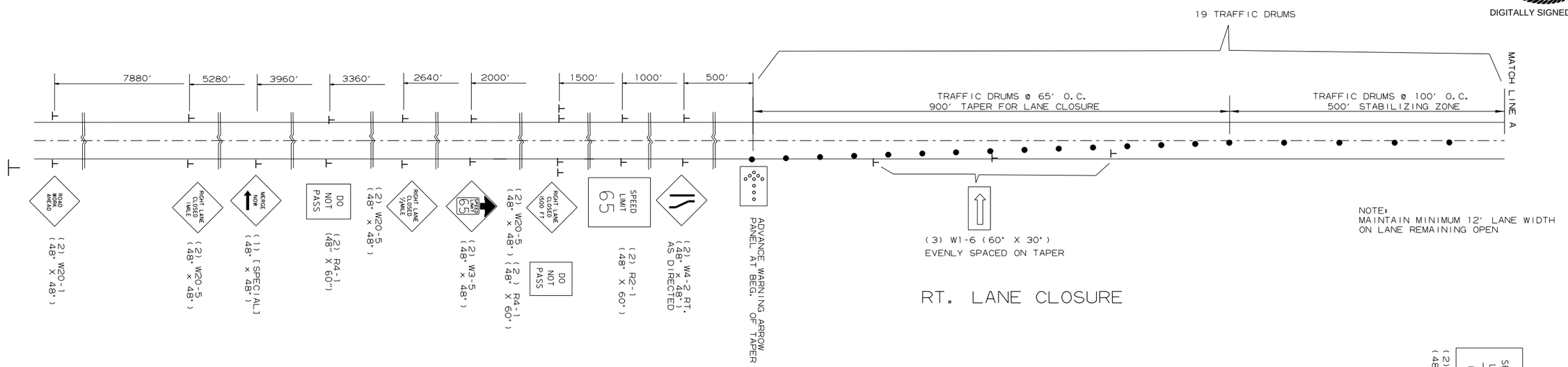

RT. LANE CLOSURE

PORTABLE CHANGEABLE MESSAGE SIGN
TO BE USED IF AND WHERE DIRECTED BY THE ENGINEER

SPEED LIMIT SIGNS ARE ALSO PROVIDED
FOR PLACEMENT PAST ENTRANCE RAMPS
WITHIN THE WORK ZONE.

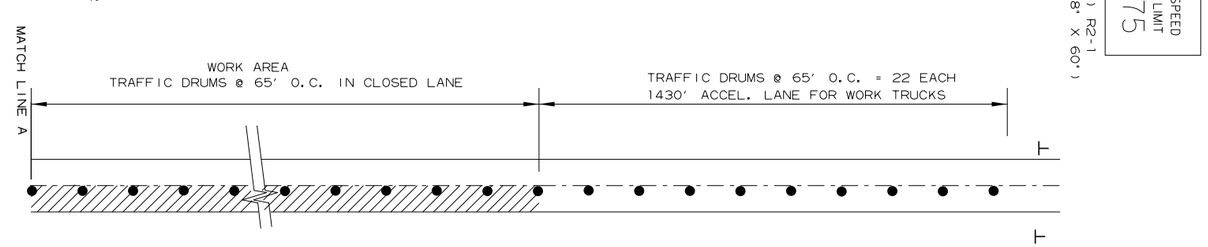

DIVERSION FOR RT. LANE WORK ZONE

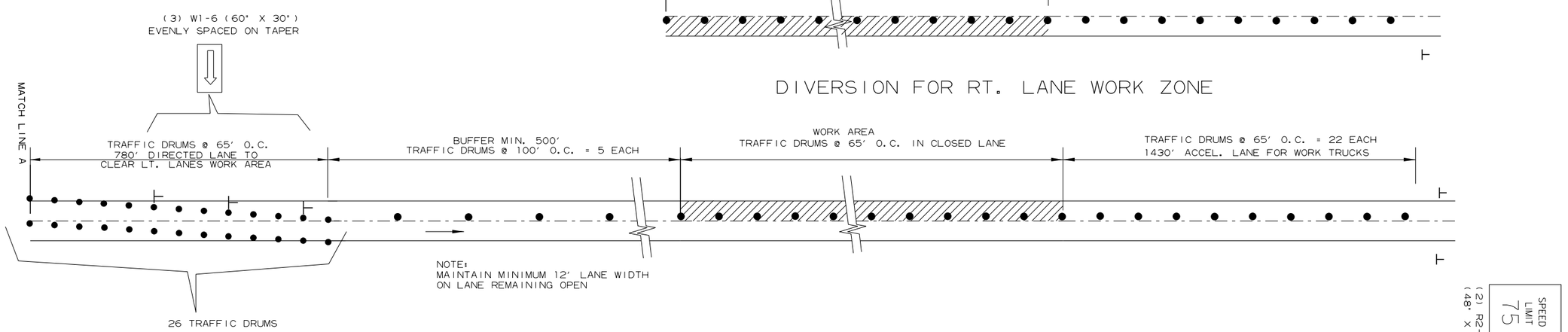

DIVERSION FOR LT. LANE WORK ZONE

MAINTENANCE OF TRAFFIC DETAILS
I-30 LANE CLOSURE

DLTackett 9/2/2022 4:24:40 PM
WORKSPACE: AHTD
L:\2017\1701634 - 070513 I-30 Str-Apprs Hwy 5\Drawings\r070513_MOT_LC.dgn
REVISED DATE:

DATE REVISED	DATE FILMED	DATE REVISED	DATE FILMED	FED.RD. DIST.NO.	STATE	FED.AID PROJ.NO.	SHEET NO.	TOTAL SHEETS
11/3/2022				6	ARK.			
				JOB NO.		070513	25	109

(2) MAINTENANCE OF TRAFFIC DETAILS

STATE OF ARKANSAS ★★★ LICENSED PROFESSIONAL ENGINEER ★★★ No.14994 DUSTIN L. TACKETT

DIGITALLY SIGNED 11/3/22

I-30 CONSTRUCTION SEQUENCE NOTES:

STAGE 1: INSTALL PCCB. LANE CLOSURES FOR INSTALLATION OF THE PCCB SHALL BE IN ACCORDANCE WITH THE DETAILS ON SHEET "MAINTENANCE OF TRAFFIC DETAILS - I-30 LANE CLOSURE"

STAGE 2: RETAIN PCCB AND INSTALL ADVANCE WARNING SIGNS AS SHOWN. CONSTRUCT BRIDGE AND RT. SIDE EMBANKMENT OF HWY. 51. REMOVE GUARDRAIL FROM EASTBOUND & WESTBOUND OUTSIDE LANES AND GRADE SLOPE.

STAGE 3A: RETAIN PCCB AND ADVANCE WARNING SIGNS. CONSTRUCT LT. SIDE EMBANKMENT OF HWY. 51.

STAGE 3B: REMOVE PCCB. LANE CLOSURES FOR REMOVAL OF THE PCCB SHALL BE IN ACCORDANCE WITH THE DETAILS ON SHEET "MAINTENANCE OF TRAFFIC DETAILS - I-30 LANE CLOSURE"

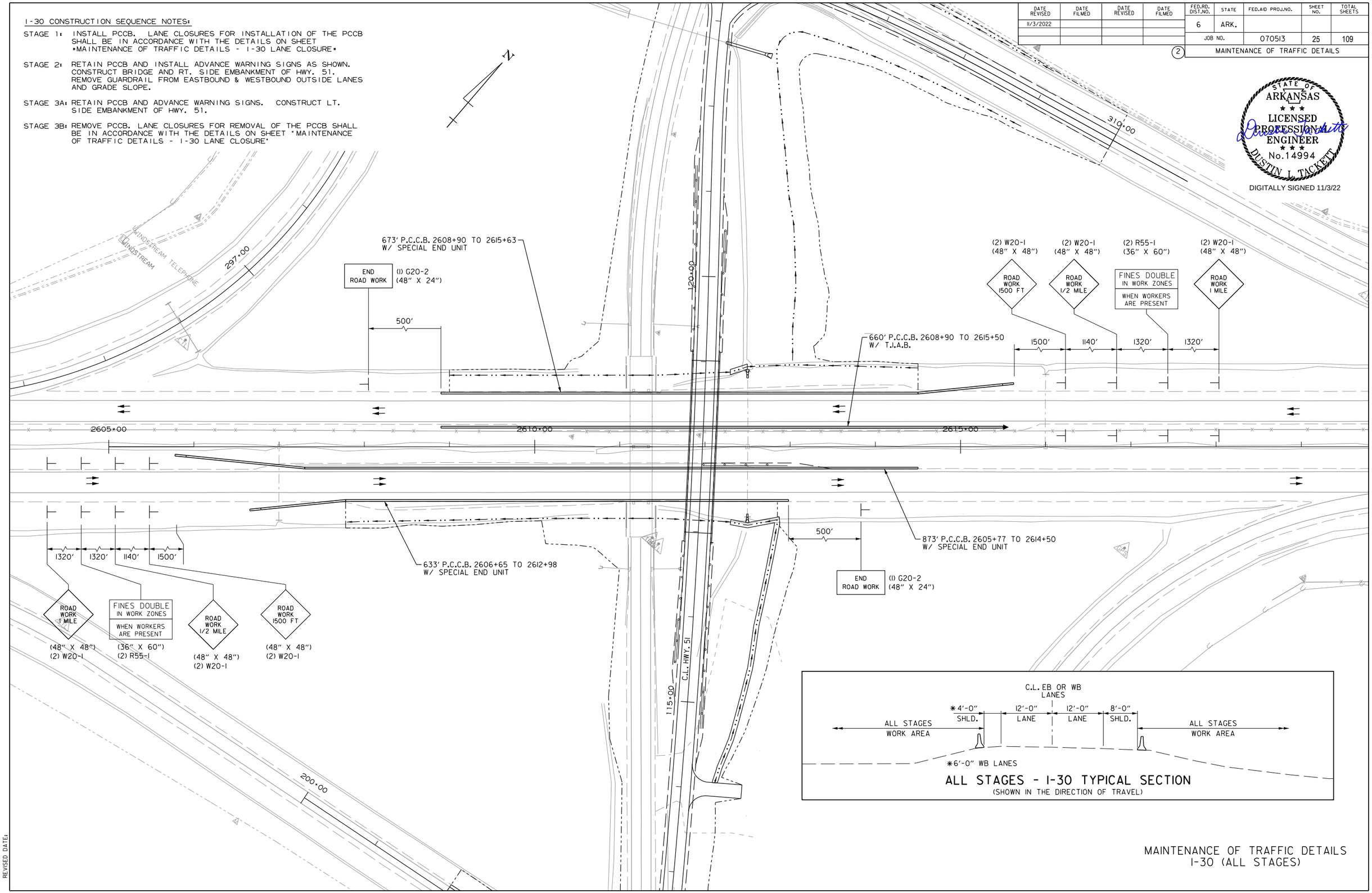

MAINTENANCE OF TRAFFIC DETAILS
I-30 (ALL STAGES)

DLTackett 11/2/2022 3:40:36 PM
WORKSPACE: AHTD
L:\2017\1701634 - 070513 I-30 Str-Apprs Hwy 51\Drawings\r070513_MOT_I-30.dgn
REVISED DATE:

DATE REVISED	DATE FILMED	DATE REVISED	DATE FILMED	FED.RD. DIST.NO.	STATE	FED.AID PROJ.NO.	SHEET NO.	TOTAL SHEETS
				6	ARK.			
				JOB NO.		070513	26	109

(2) MAINTENANCE OF TRAFFIC DETAILS

STATE OF ARKANSAS ★★★ LICENSED PROFESSIONAL ENGINEER ★★★ No.14994 DUSTIN L. TACKETT

DIGITALLY SIGNED 9/2/22

STAGE 1- ISLAND REPLACEMENT TYPICAL SECTION

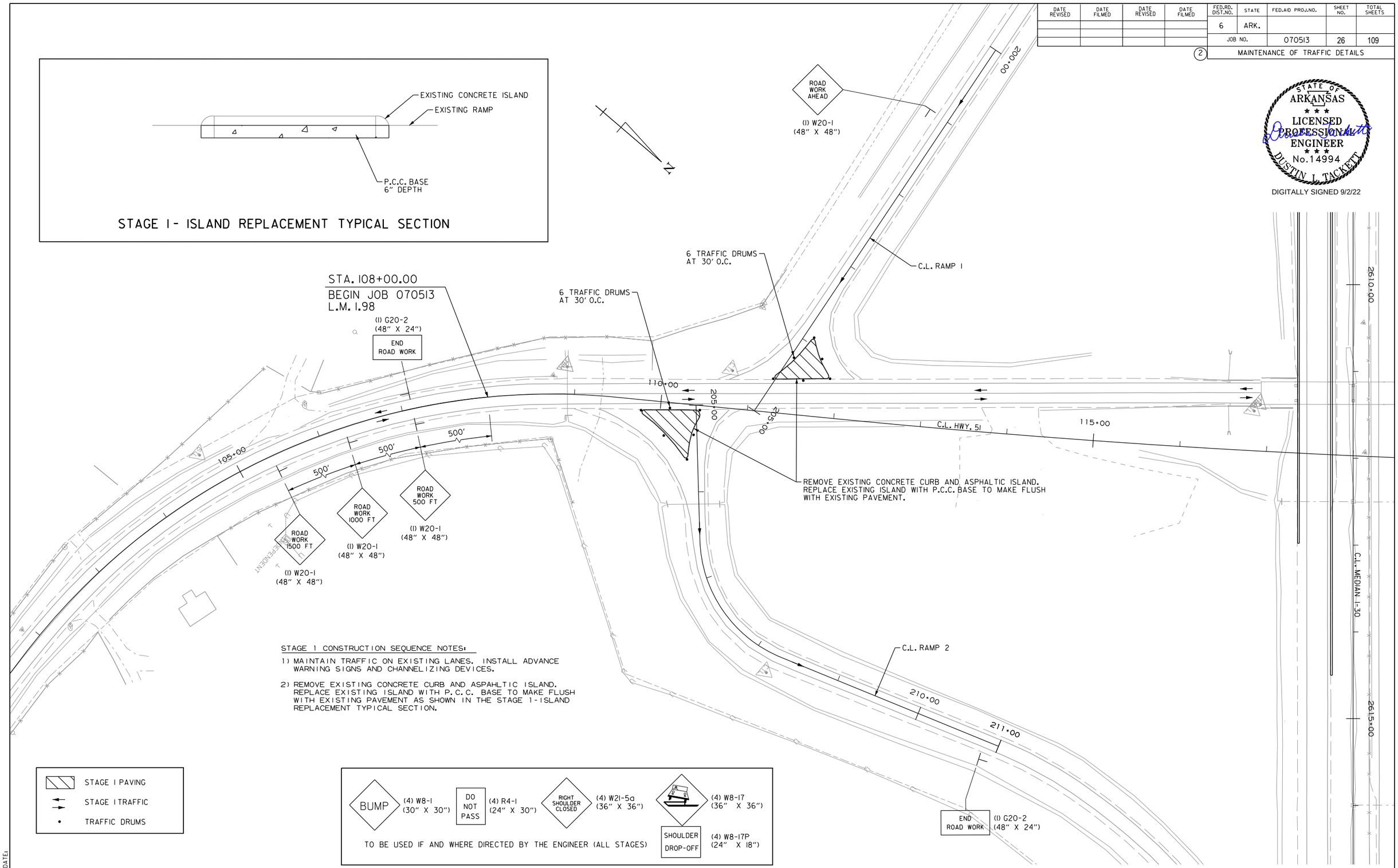

STAGE 1 CONSTRUCTION SEQUENCE NOTES:

1) MAINTAIN TRAFFIC ON EXISTING LANES. INSTALL ADVANCE WARNING SIGNS AND CHANNELIZING DEVICES.

2) REMOVE EXISTING CONCRETE CURB AND ASPAHLTIC ISLAND. REPLACE EXISTING ISLAND WITH P.C.C. BASE TO MAKE FLUSH WITH EXISTING PAVEMENT AS SHOWN IN THE STAGE 1-ISLAND REPLACEMENT TYPICAL SECTION.

STAGE 1 PAVING

STAGE 1 TRAFFIC

TRAFFIC DRUMS

BUMP (4) W8-1 (30" X 30")

DO NOT PASS (4) R4-1 (24" X 30")

RIGHT SHOULDER CLOSED (4) W21-5a (36" X 36")

(4) W8-17 (36" X 36")

SHOULDER DROP-OFF (4) W8-17P (24" X 18")

TO BE USED IF AND WHERE DIRECTED BY THE ENGINEER (ALL STAGES)

MAINTENANCE OF TRAFFIC DETAILS
STAGE 1

DLTackett 9/2/2022 4:24:42 PM
WORKSPACE: AHTD
L:\20\T\070634 - 070513 I-30 Str-Apprs Hwy 5\Drawings\r070513_MOT_STAGE 1.dgn
REVISED DATE:

DATE REVISED	DATE FILMED	DATE REVISED	DATE FILMED	FED.RD. DIST.NO.	STATE	FED.AID PROJ.NO.	SHEET NO.	TOTAL SHEETS
				6	ARK.			
				JOB NO.		070513	27	109

(2) MAINTENANCE OF TRAFFIC DETAILS

STATE OF ARKANSAS ★★★ LICENSED PROFESSIONAL ENGINEER ★★★ No.14994 DUSTIN L. TACKETT

DIGITALLY SIGNED 9/2/22

STAGE 1 CONSTRUCTION SEQUENCE NOTES:

1) MAINTAIN TRAFFIC ON EXISTING LANES. INSTALL ADVANCE WARNING SIGNS AND CHANNELIZING DEVICES.

2) CONSTRUCT RAMP 4 DETOUR.

3) CONSTRUCT FULL DEPTH SHOULDER ON LT. BETWEEN DETOUR RAMP 4 AND END OF THE JOB.

4) REMOVE EXISTING CONCRETE ISLAND. REPLACE EXISTING CONCRETE WITH ISLAND REPLACEMENT PAVEMENT TO MATCH SURROUNDING EXISTING GRADE.

STAGE 1 PAVING

STAGE 1 TRAFFIC

TRAFFIC DRUMS

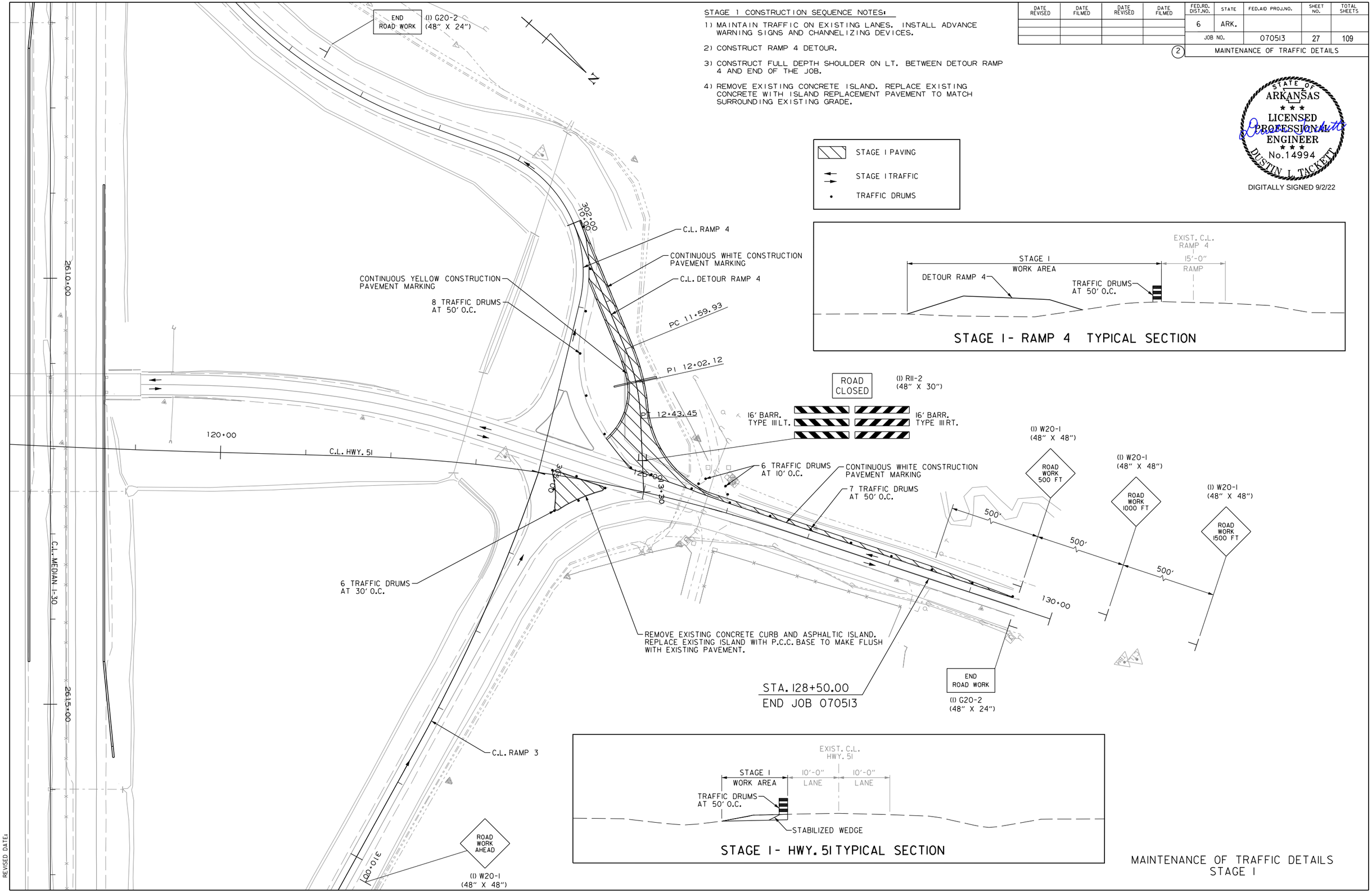

STAGE 1- RAMP 4 TYPICAL SECTION

STAGE 1- HWY. 51 TYPICAL SECTION

MAINTENANCE OF TRAFFIC DETAILS
STAGE 1

DLTackett 9/2/2022 4:24:43 PM
WORKSPACE: AHTD
L:\2017\1701634 - 070513 I-30 Str-Apprs Hwy 51\Drawings\r070513_MOT_STAGE 1_2.dgn
REVISED DATE:

DATE REVISED	DATE FILMED	DATE REVISED	DATE FILMED	FED.RD. DIST.NO.	STATE	FED.AID PROJ.NO.	SHEET NO.	TOTAL SHEETS
				6	ARK.			
				JOB NO.		070513	28	109

(2) MAINTENANCE OF TRAFFIC DETAILS

STATE OF ARKANSAS ★★★ LICENSED PROFESSIONAL ENGINEER ★★★ No.14994 DUSTIN L. TACKETT

DIGITALLY SIGNED 9/2/22

AS PER TYPICAL SECTION AND METHOD OF RAISING GRADE SPECIAL DETAIL

108.89' TEMPORARY VERTICAL TIE

STA. 112+06.34 — STA. 113+13.95

3.27% — 3.00% — 4.00%

7"

TEMPORARY VERTICAL TIE
HWY. 51

STAGE 2 CONSTRUCTION SEQUENCE NOTES:

1) MAINTAIN ADVANCE WARNING SIGNS AS SHOWN.

2) MAINTAIN TRAFFIC ON EXISTING LANES. INSTALL CHANNELIZING DEVICES AS SHOWN.

3) CONSTRUCT HWY. 51 BRIDGE, APPROACHES, AND RAMPS AS SHOWN.

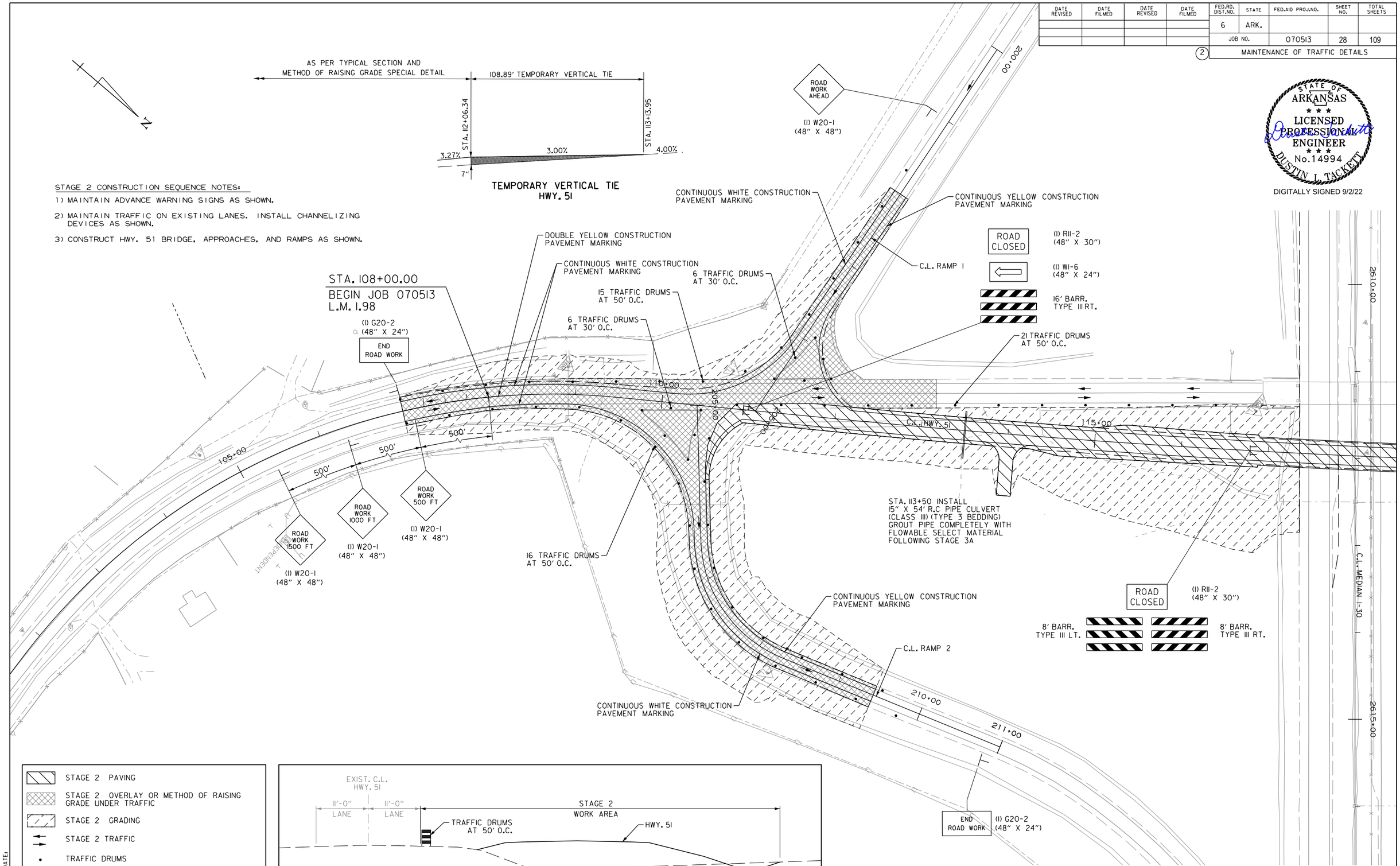

STAGE 2 PAVING

STAGE 2 OVERLAY OR METHOD OF RAISING GRADE UNDER TRAFFIC

STAGE 2 GRADING

STAGE 2 TRAFFIC

TRAFFIC DRUMS

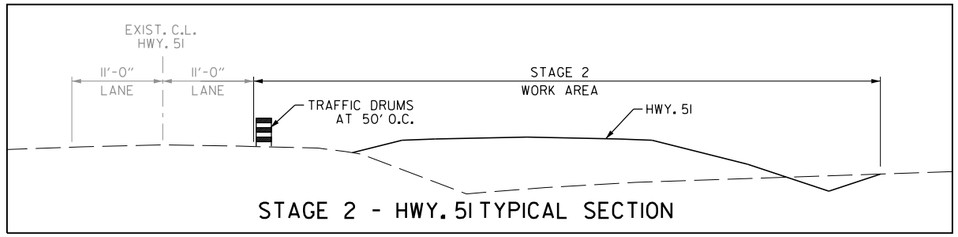

STAGE 2 - HWY. 51 TYPICAL SECTION

MAINTENANCE OF TRAFFIC DETAILS
STAGE 2

DLTackett 9/2/2022 4:24:44 PM
WORKSPACE: AHTD
L:\20TN\170T634 - 070513 I-30 Str-Apprs Hwy 5\Drawings\070513_MOT_STAGE 2.1.dgn
REVISED DATE:

DATE REVISED	DATE FILMED	DATE REVISED	DATE FILMED	FED.RD. DIST.NO.	STATE	FED.AID PROJ.NO.	SHEET NO.	TOTAL SHEETS
				6	ARK.			
				JOB NO.		070513	29	109

(2) MAINTENANCE OF TRAFFIC DETAILS

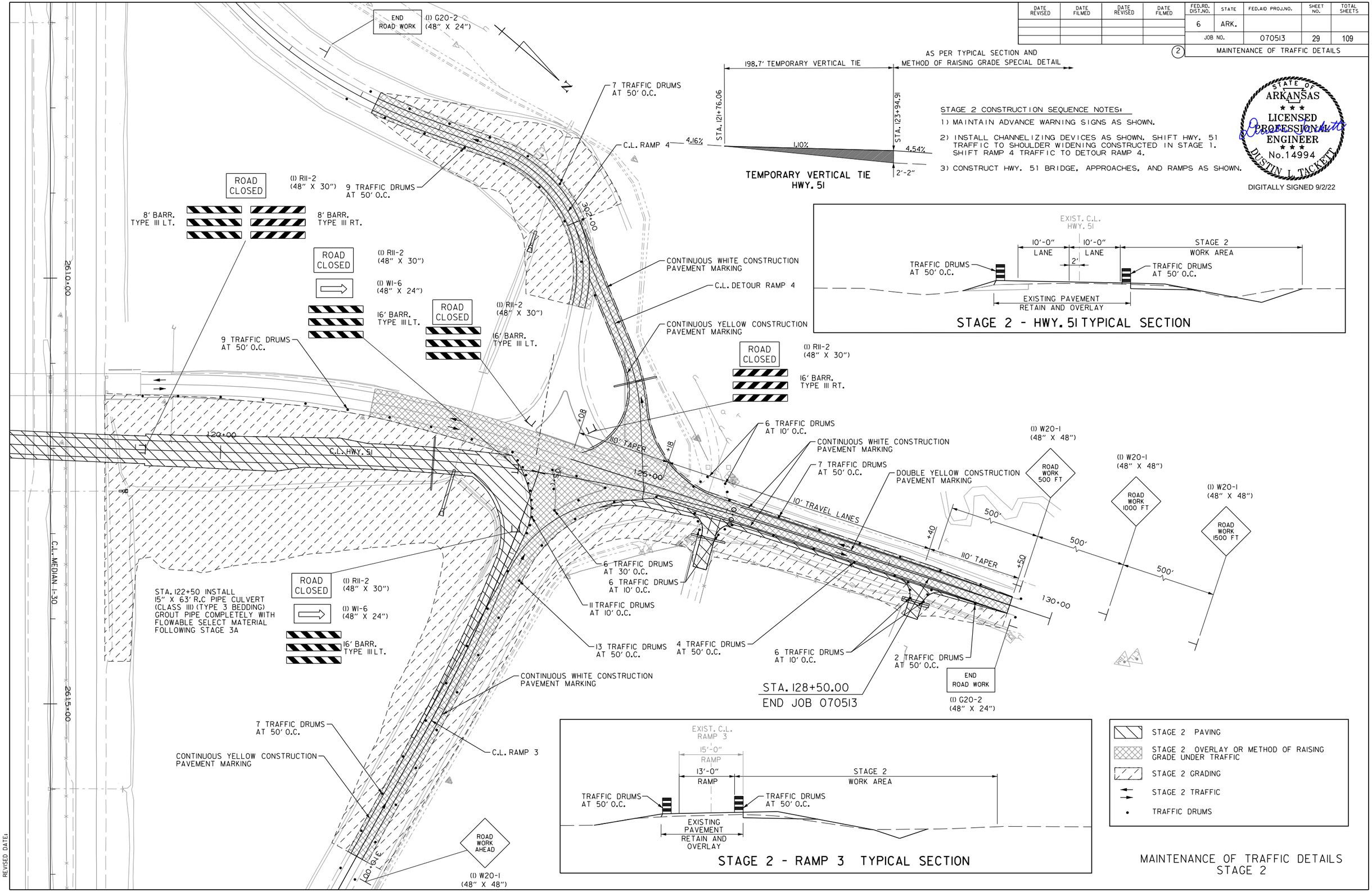

DLTackett 9/2/2022 4:24:45 PM
WORKSPACE: AHTD
L:\2017\17017634 - 070513 I-30 Str-Apprs Hwy 51\Drawings\r070513_MOT_STAGE 2.2.dgn
REVISED DATE:

DATE REVISED	DATE FILMED	DATE REVISED	DATE FILMED	FED.RD. DIST.NO.	STATE	FED.AID PROJ.NO.	SHEET NO.	TOTAL SHEETS
				6	ARK.			
				JOB NO.		070513	30	109

(2) MAINTENANCE OF TRAFFIC DETAILS

STAGE 3 CONSTRUCTION SEQUENCE NOTES:

1) MAINTAIN ADVANCE WARNING SIGNS AS SHOWN.
2) INSTALL CHANNELIZING DEVICES AS SHOWN.
3) SHIFT HWY. 51 TRAFFIC TO NEW HWY. 51 PAVEMENT AND BRIDGE.
4) REMOVE EXISTING BRIDGE AND APPROACHES.
5) CONSTRUCT REMAINING GRADING ON LEFT SIDE OF HWY. 51 AND ALONG I-30.
6) PLACE FINAL 2" ACHM SURFACE COURSE AND PERMANENT PAVEMENT MARKINGS.

STAGE 3A GRADING
STAGE 3A TRAFFIC
TRAFFIC DRUMS

STATE OF ARKANSAS LICENSED PROFESSIONAL ENGINEER No.14994 DUSTIN L. TACKETT
DIGITALLY SIGNED 9/2/22

STA. 108+00.00
BEGIN JOB 070513
L.M. 1.98

(1) G20-2 (48" X 24") END ROAD WORK

ROAD WORK 1500 FT — (1) W20-1 (48" X 48")
ROAD WORK 1000 FT — (1) W20-1 (48" X 48")
ROAD WORK 500 FT — (1) W20-1 (48" X 48")
ROAD WORK AHEAD — (1) W20-1 (48" X 48")

500' 500' 500'

105+00 110+00 115+00 200+00 205+00 210+00 211+00 261+00 261+50

C.L. HWY. 51
C.L. RAMP 1
C.L. RAMP 2
C.L. MEDIAN I-30

CONTINUOUS WHITE CONSTRUCTION PAVEMENT MARKING
CONTINUOUS YELLOW CONSTRUCTION PAVEMENT MARKING
DOUBLE YELLOW CONSTRUCTION PAVEMENT MARKING
DOUBLE YELLOW REMOVABLE CONSTRUCTION PAVEMENT MARKING
CONTINUOUS WHITE REMOVABLE CONSTRUCTION PAVEMENT MARKING

(1) W1-6 (48" X 24")
ROAD CLOSED — (1) R11-2 (48" X 30")
16' BARR. TYPE III LT.
140' P.C.C.B. 115+48 TO 116+88 W/ T.I.A.B.
13 TRAFFIC DRUMS AT 50' O.C.
220' P.C.C.B. 114+68 TO 116+88 W/ T.I.A.B.
ROAD CLOSED — (1) R11-2 (48" X 30")
8' BARR. TYPE III LT.
8' BARR. TYPE III RT.
END ROAD WORK — (1) G20-2 (48" X 24")

MAINTENANCE OF TRAFFIC DETAILS
STAGE 3

DLTackett 9/2/2022 4:24:46 PM
WORKSPACE: AHTD
L:\201\701634 - 070513 I-30 Str-Apprs Hwy 51\Drawings\r070513_MOT_STAGE 3A.i.dgn
REVISED DATE:

DATE REVISED	DATE FILMED	DATE REVISED	DATE FILMED	FED.RD. DIST.NO.	STATE	FED.AID PROJ.NO.	SHEET NO.	TOTAL SHEETS
				6	ARK.			
				JOB NO.		070513	31	109
				(2)	MAINTENANCE OF TRAFFIC DETAILS			

STATE OF ARKANSAS
LICENSED PROFESSIONAL ENGINEER
No.14994
DUSTIN L. TACKETT

DIGITALLY SIGNED 9/2/22

STAGE 3A CONSTRUCTION SEQUENCE NOTES:

1) MAINTAIN ADVANCE WARNING SIGNS AS SHOWN.
2) INSTALL CHANNELIZING DEVICES AS SHOWN.
3) SHIFT HWY. 51 TRAFFIC TO NEW HWY. 51 BRIDGE AND APPROACHES.
4) REMOVE EXISTING BRIDGE STRUCTURE AND APPROACHES.
5) CONSTRUCT RAMP AND REMAINING GRADING ON LEFT SIDE OF HWY. 51 AND ALONG I-30.

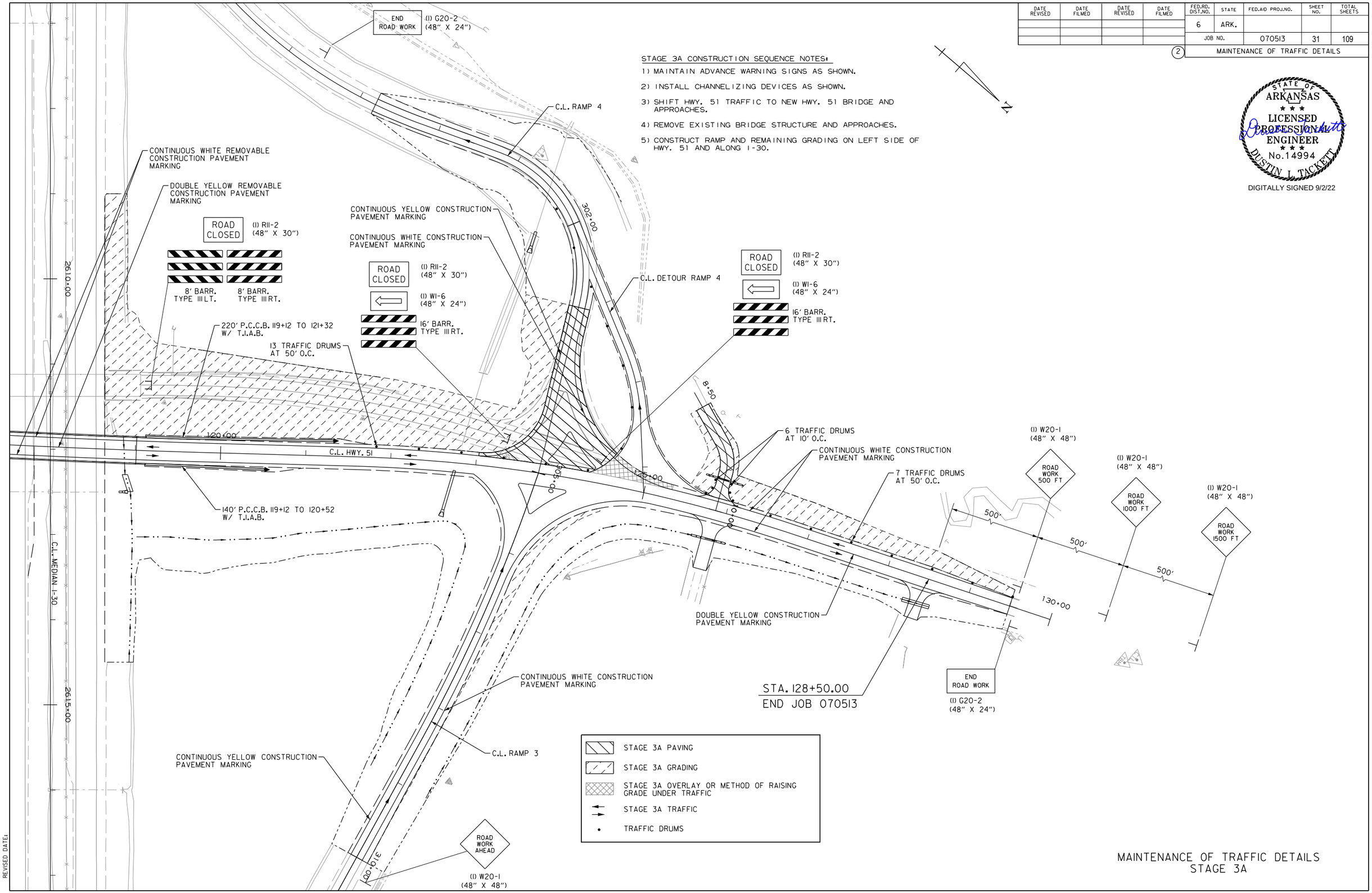

MAINTENANCE OF TRAFFIC DETAILS
STAGE 3A

DLTackett 9/2/2022 4:24:47 PM
WORKSPACE: AHTD
L:\2017\1701634 - 070513 I-30 Str-Apprs Hwy 51\Drawings\r070513_MOT_STAGE 3A_2.dgn
REVISED DATE:

DATE REVISED	DATE FILMED	DATE REVISED	DATE FILMED	FED.RD. DIST.NO.	STATE	FED.AID PROJ.NO.	SHEET NO.	TOTAL SHEETS
				6	ARK.			
				JOB NO.		070513	32	109

(2) MAINTENANCE OF TRAFFIC DETAILS

STATE OF ARKANSAS
LICENSED PROFESSIONAL ENGINEER
No.14994
DUSTIN L. TACKETT

DIGITALLY SIGNED 9/2/22

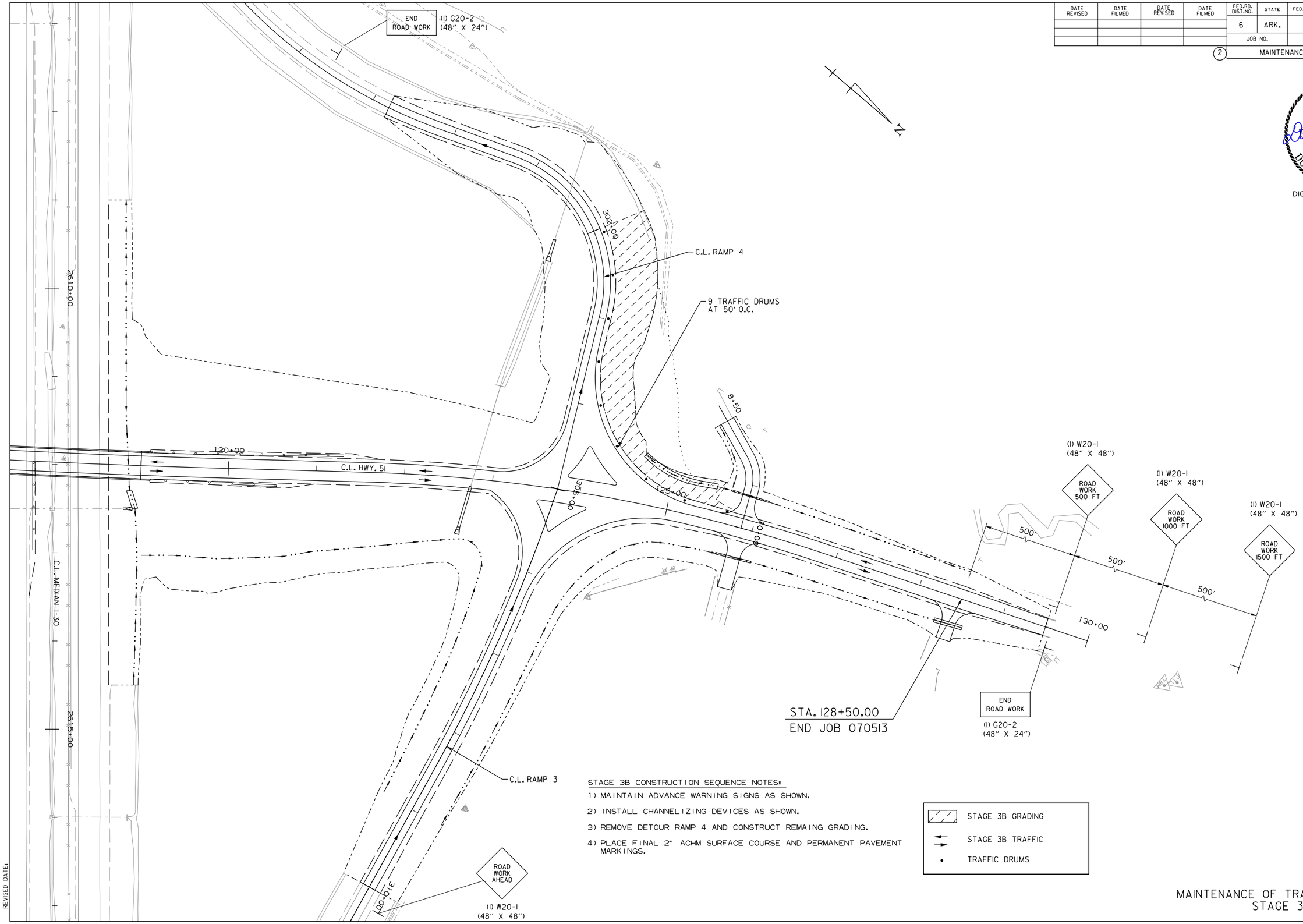

STAGE 3B CONSTRUCTION SEQUENCE NOTES:

1) MAINTAIN ADVANCE WARNING SIGNS AS SHOWN.

2) INSTALL CHANNELIZING DEVICES AS SHOWN.

3) REMOVE DETOUR RAMP 4 AND CONSTRUCT REMAING GRADING.

4) PLACE FINAL 2" ACHM SURFACE COURSE AND PERMANENT PAVEMENT MARKINGS.

MAINTENANCE OF TRAFFIC DETAILS
STAGE 3B

DLTackett 9/2/2022 4:24:47 PM
WORKSPACE: AHTD
L:\20TN\T017634 - 070513 I-30 Str-Apprs Hwy 5\Drawings\r070513_MOT_STAGE 3B_2.dgn
REVISED DATE:

DATE REVISED	DATE FILMED	DATE REVISED	DATE FILMED	FED.RD. DIST.NO.	STATE	FED.AID PROJ.NO.	SHEET NO.	TOTAL SHEETS
				6	ARK.			
				JOB NO.		070513	33	109

(2) PERMANENT PAVEMENT MARKING DETAILS

STATE OF ARKANSAS
LICENSED PROFESSIONAL ENGINEER
No.14994
DUSTIN L. TACKETT

DIGITALLY SIGNED 9/2/22

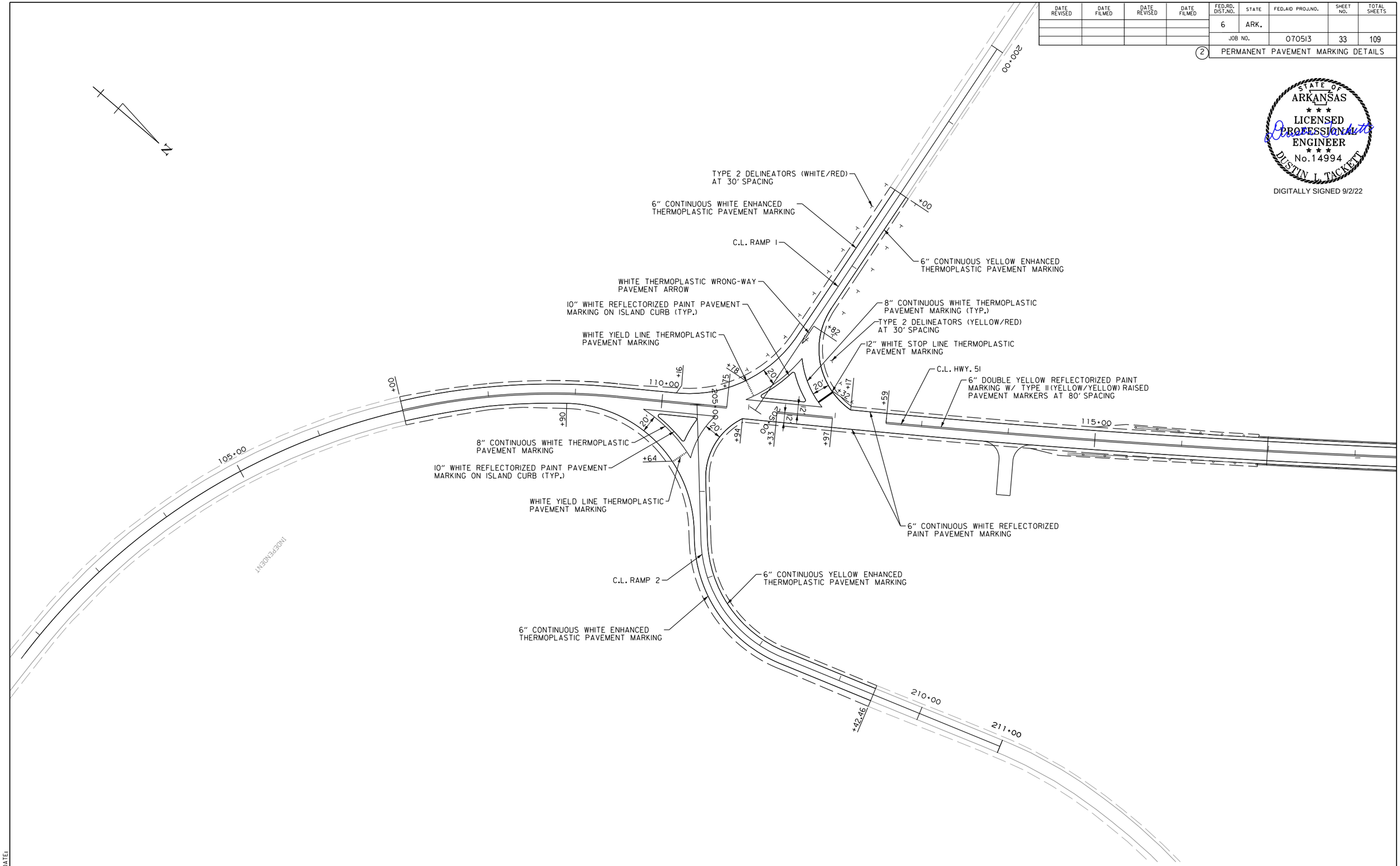

PERMANENT PAVEMENT MARKING DETAILS

DLTackett 9/2/2022 4:24:48 PM
WORKSPACE: AHTD
L:\201\70\7634 - 070513 I-30 Str-Apprs Hwy 51\Drawings\r070513_PM_01.dgn
REVISED DATE:

DATE REVISED	DATE FILMED	DATE REVISED	DATE FILMED	FED.RD. DIST.NO.	STATE	FED.AID PROJ.NO.	SHEET NO.	TOTAL SHEETS
				6	ARK.			
				JOB NO.		070513	34	109

(2) PERMANENT PAVEMENT MARKING DETAILS

STATE OF ARKANSAS
LICENSED PROFESSIONAL ENGINEER
No.14994
DUSTIN L. TACKETT

DIGITALLY SIGNED 9/2/22

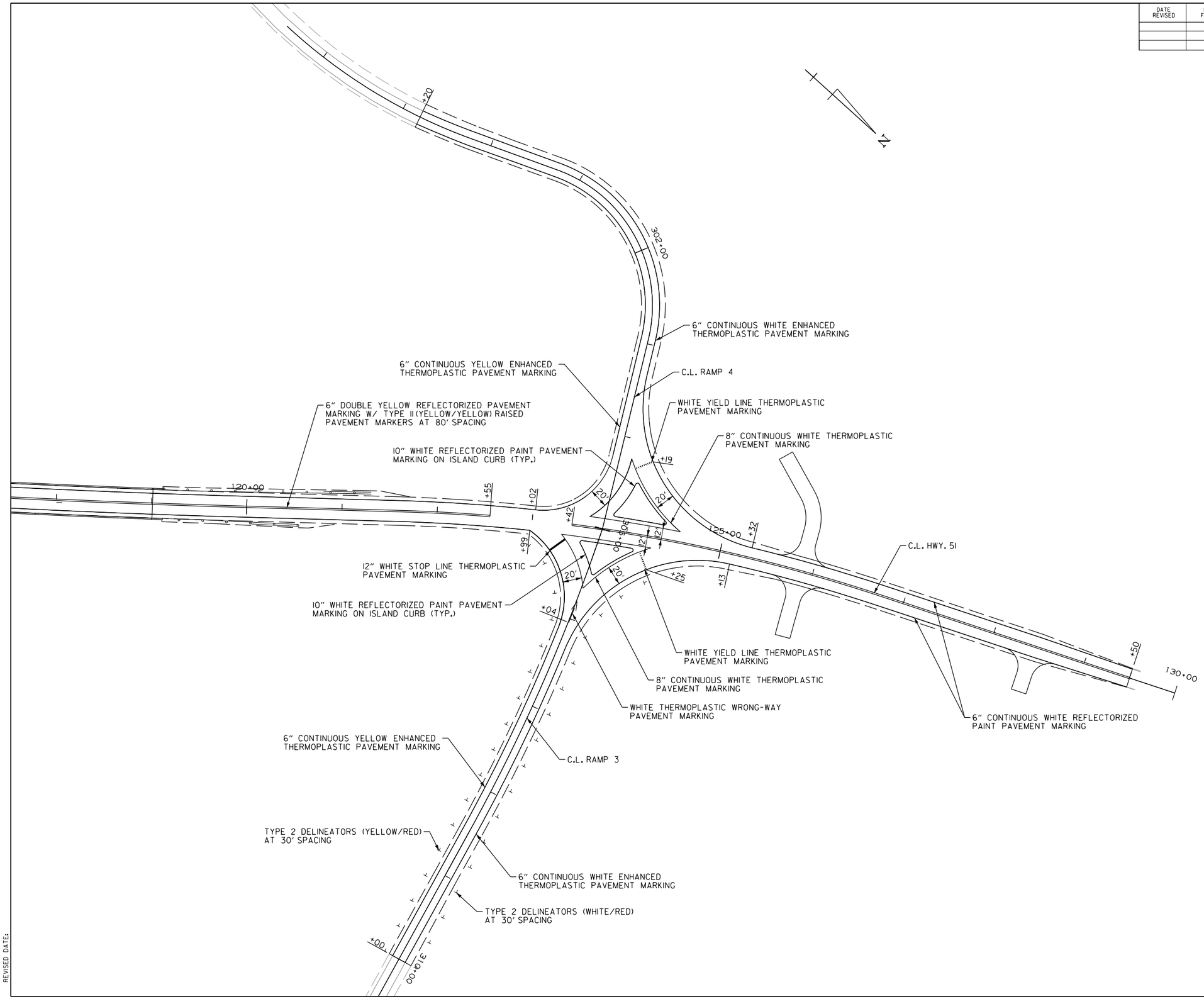

PERMANENT PAVEMENT MARKING DETAILS

DLTackett 9/2/2022 4:24:49 PM
WORKSPACE: AHTD
L:\201\70\7634 - 070513 I-30 Str-Apprs Hwy 51\Drawings\r070513.PM.02.dgn
REVISED DATE:

STATE OF ARKANSAS
LICENSED PROFESSIONAL ENGINEER
No.14994
DUSTIN L. TACKETT

DIGITALLY SIGNED 9/2/22

SOIL BORING LOG

BORING or TEST PIT NO.	APPROX. STATION	SAMPLE DEPTH (ft)	WATER CONTENT (%)	ATTERBERG LIMITS LIQUID LIMIT	ATTERBERG LIMITS PLASTIC LIMIT	ATTERBERG LIMITS PLASTICITY INDEX	PERCENT PASSING #200, %	UNIFIED CLASS.	AASHTO CLASS.
S1	116+95 10' LT	2.5-3.5	16	22	16	6	59	ML-CL	A-4
S1	116+95 10' LT	6.5-7.5	21	39	20	19	77	CL	A-6
S1	116+95 10' LT	19-20	3	----	----	----	4	SP	A-3
S1	116+95 10' LT	24-25	25	----	----	----	9	AM-AP	A-1-a
S1	116+95 10' LT	29-29.5	30	52	19	33	----	CH	A-7-6
S1	116+95 10' LT	34-35	24	NON-PLASTIC			17	SM	A-2-4
S1	116+95 10' LT	44-45	66	----	----	----	48	SM	A-4
S1	116+95 10' LT	59-60	29	NON-PLASTIC			23	SM	A-2-4
S2	118+00, CL	2.5-3.5	15	21	16	5	32	SM-SC	A-2-4
S2	118+00, CL	6.5-7.5	12	NON-PLASTIC			13	SM	A-2-4
S2	118+00, CL	9-10	11	----	----	----	4	GP	A-1-a
S2	118+00, CL	19-20	26	----	----	----	9	SM-SP	A-3
S2	118+00, CL	24-25	31	52	18	34		CH	A-7-6
S2	118+00, CL	49-50	33	----	----	----	19	SM	A-2-4
S3	119+10 CL	0.5-1.5	13	25	15	10	43	SC	A-4
S3	119+10 CL	2.5-3.5	16	31	18	13	49	SC	A-6
S3	119+10 CL	14-15	11				16	SC	A-2-6
S3	119+10 CL	19-20	7				7	GM-GW	A-1-a
S3	119+10 CL	24-25	22	NON-PLASTIC			29	SM	A-2-4
S3	119+10 CL	49-50	25	NON-PLASTIC			42	SM	A-4
W1	117+25, 35' LT	4.5-5.5	20	NON-PLASTIC			71	ML	A-4
W1	117+25, 35' LT	9-10	8				21	SM	A-2-4
W1	117+25, 35' LT	14-15	18	NON-PLASTIC			6	GM-GW	A-1-a
W2	117+10, 25' RT	2.5-3.5	18	34	19	15	79	CL	A-6
W2	117+10, 25' RT	4.5-5.5	18	NON-PLASTIC			50	SM	A-4
W2	117+10, 25' RT	6.5-7.5	21	----	----	----	30	SM	A-4
W3	116+85, 50' RT	2.5-3.5	12	30	19	11	35	SC	A-2-6
W3	116+85, 50' RT	9-10	15	NON-PLASTIC			45	SM	A-4
W3	116+85, 50' RT	14-15	5	----	----	----	23	SM	A-1-b
W4	119+00, 35' RT	0.5-1.5	11	21	15	6	36	SM-SC	A-4
W4	119+00, 35' RT	6.5-7.5	15	31	17	14	51	CL	A-6
W5	118+90, 25' RT	4.5-5.5	16	20	18	2	46	SM	A-4
W5	118+90, 25' RT	19-20	24	----	----	----	7	SM-SP	A-3
W6	119+15, 50' RT	2.5-3.5	17	24	20	4	50	SM	A-4
W6	119+15, 50' RT	6.5-7.5	15	NON-PLASTIC			20	SM	A-2-4
W6	119+15, 50' RT	14-15	36	----	----	----	9	GM-GW	A-1-a
P1	118+90, 25' RT	0.5-1.5	13	NON-PLASTIC			55	ML	A-4
P1	118+90, 25' RT	2.5-3.5	18	30	16	14	66	CL	A-6
P2	119+15 , 50' RT	0.5-1.5	16	NON-PLASTIC			37	SM	A-4
P2	119+15 , 50' RT	4.5-5.5	14	25	15	10	59	CL	A-4

SOIL CHARACTERISTICS TABULATED ABOVE ARE REPRESENTATIVE AT THE LOCATION OF THE SAMPLE, AND FROM SURFACE INDICATIONS ARE TYPICAL FOR THE LIMIT SHOWN. THESE DATA ARE SHOWN FOR INFORMATION ONLY. THE STATE WILL NOT BE RESPONSIBLE FOR VARIATIONS IN THE SOIL CHARACTERISTICS AND/OR EXTENT OF SAME DIFFERING FROM THE ABOVE TABULATIONS.

STATE OF ARKANSAS LICENSED PROFESSIONAL ENGINEER No.14994 DUSTIN L. TACKETT

DIGITALLY SIGNED 11/3/22

CONSTRUCTION PAVEMENT MARKINGS AND PERMANENT PAVEMENT MARKINGS

DESCRIPTION	STAGE 1	STAGE 2	STAGE 3	END OF JOB	CONSTRUCTION PAVEMENT MARKINGS	REMOVAL OF CONSTRUCTION PAVEMENT MARKINGS	REMOVABLE CONSTRUCTION PAVEMENT MARKINGS	RAISED PAVEMENT MARKERS	ENHANCED THERMOPLASTIC PAVEMENT MARKING		THERMOPLASTIC PAVEMENT MARKING				REFLECTORIZED PAINT PAVEMENT MARKING		
								TYPE II	6"		8"	12"	YIELD LINE	ARROWS	6"		10"
								(YELLOW/YELLOW)	WHITE	YELLOW	WHITE	WHITE			WHITE	YELLOW	WHITE
	LIN. FT. - EACH				LIN. FT.	LIN. FT.		EACH	LIN. FT.		LIN. FT.			EACH	LIN. FT.		
REMOVAL OF PERMANENT PAVEMENT MARKINGS																	
CONSTRUCTION PAVEMENT MARKINGS	982	8795	8760		18537												
REMOVAL OF CONSTRUCTION PAVEMENT MARKINGS			5819			5819											
REMOVABLE CONSTRUCTION PAVEMENT MARKINGS			808				808										
RAISED PAVEMENT MARKERS TYPE II (YELLOW/YELLOW)		29	29	29				87									
ENHANCED THERMOPLASTIC PAVEMENT MARKING WHITE (6")				2188					2188								
ENHANCED THERMOPLASTIC PAVEMENT MARKING YELLOW (6")				1872						1872							
THERMOPLASTIC PAVEMENT MARKING WHITE (8")				1007							1007						
THERMOPLASTIC PAVEMENT MARKING WHITE (12")												40					
THERMOPLASTIC PAVEMENT MARKING (YIELD LINE)													80				
THERMOPLASTIC PAVEMENT MARKING (ARROWS)				2										2			
REFLECTORIZED PAINT PAVEMENT MARKING WHITE (6")				3652											3652		
REFLECTORIZED PAINT PAVEMENT MARKING YELLOW (6")				4088												4088	
REFLECTORIZED PAINT PAVEMENT MARKING WHITE (10")				551													551
TOTALS:					**18537**	**5819**	**808**	**87**	**2188**	**1872**	**1007**	**40**	**80**	**2**	**3652**	**4088**	**551**

NOTE: THIS IS A LOW TRAFFIC VOLUME ROAD AS DEFINED IN SECTION 604.03, STANDARD SPECIFICATIONS FOR HIGHWAY CONSTRUCTION.

NOTE: THE 6" YELLOW STRIPING QUANTITY HAS BEEN ESTIMATED BASED ON A DOUBLE YELLOW CENTERLINE STRIPE FOR THE ENTIRE PROJECT.
THE PROJECT MUST BE MARKED FOR PASSING/NO PASSING ZONES PRIOR TO THE PLACEMENT OF ANY FINAL STRIPING.
CONTACT THE MAINTENANCE DIVISION AFTER THE FINAL LIFT OF SURFACE COURSE HAS BEEN PLACED TO SCHEDULE THE ZONING OF THE PROJECT.

ADVANCE WARNING SIGNS AND DEVICES

SIGN NUMBER	DESCRIPTION	SIGN SIZE	STAGE 1	STAGE 2	STAGE 3A	STAGE 3B	MAXIMUM NUMBER REQUIRED	TOTAL SIGNS REQUIRED		TRAFFIC DRUMS	BARRICADES (TYPE III)		FURNISHING & INSTALLING PRECAST CONC. BARRIER	TEMPORARY IMPACT ATTENUATION BARRIER	TEMP. IMPACT ATTEN.BARR. (REPAIR)	* ADVANCE WARNING ARROW PANEL	* PORTABLE CHANGEABLE MESSAGE SIGN
											RIGHT	LEFT					
			LIN. FT. - EACH					NO.	SQ. FT.	EACH	LIN. FT.		LIN. FT.	EACH		DAY	WEEK
W20-1	ROAD WORK 1 MILE	48"x48"		4	4		4	4	64.0								
W20-1	ROAD WORK 1/2 MILE	48"x48"		4	4		4	4	64.0								
W20-1	ROAD WORK 1500 FT.	48"x48"	2	6	6	1	6	6	96.0								
W20-1	ROAD WORK 1000 FT.	48"x48"	2	2	2	1	2	2	32.0								
W20-1	ROAD WORK 500 FT.	48"x48"	2	2	2	1	2	2	32.0								
W20-1	ROAD WORK AHEAD	48"x48"	6	2	2	5	6	6	96.0								
G20-2	END ROAD WORK	48"x24"	4	6	6	2	6	6	96.0								
W20-5	RIGHT LANE CLOSED 1 MILE	48"x48"	4			4	4	4	64.0								
W20-5	RIGHT LANE CLOSED 1/2 MILE	48"x48"	4			4	4	4	64.0								
W20-5	RIGHT LANE CLOSED 1500 FT.	48"x48"	4			4	4	4	64.0								
R11-2	ROAD CLOSED	48"x30"	1	7	5		7	7	70.0								
W1-6	LARGE ARROW	48"x24"		3	3		3	3	24.0								
W1-6	LARGE ARROW	60"x30"	12			12	12	12	150.0								
W3-5	SPEED LIMIT 65 MPH (ADVISORY)	48"x48"	4			4	4	4	64.0								
W4-2 RT	LANE ENDS, MERGE LEFT	48"x48"				4	4	4	64.0								
R2-1	SPEED LIMIT 75 MPH	48"X60"	4			4	4	4	80.0								
R2-1	SPEED LIMIT 65 MPH	48"X60"				4	4	4	80.0								
R4-1	DO NOT PASS	24"x30"	4	4	4	4	4	4	20.0								
R4-1	DO NOT PASS	48"x60"	4			4	4	4	80.0								
R55-1	FINES DOUBLE IN WORK ZONES	36"x60"		4			4	4	60.0								
W8-1	BUMP	30"x30"	4	4	4	4	4	4	25.0								
W8-17	SHOULDER DROP-OFF	36"x36"	4	4	4	4	4	4	36.0								
W8-17P	SHOULDER DROP-OFF	24"x18"	4	4	4	4	4	4	12.0								
SPECIAL	MERGE NOW	48"x48'	2			2	2	2	32.0								
	TRAFFIC DRUMS		199	157	39	169	199			199							
	TYPE III BARRICADE-RT. (8')			2	2		2				16						
	TYPE III BARRICADE-LT. (8')			2	2		2					16					
	TYPE III BARRICADE-RT. (16')		1	2	2		2				32						
	TYPE III BARRICADE-LT. (16')		1	3	1		3					48					
	FURNISHING AND INSTALLING PRECAST CONCRETE BARRIER		2839		720		3559						3559				
	RELOCATING PRECAST CONCRETE BARRIER																
	TEMPORARY IMPACT ATTENUATION BARRIER		1		4		5							5			
	TEMPORARY IMPACT ATTENUATION BARRIER (REPAIR)														5		
	ADVANCE WARNING ARROW PANEL		2			2	4									10	
	PORTABLE CHANGEABLE MESSAGE SIGN		2			2	4										2
TOTALS:									**1469.0**	**199**	**48**	**64**	**3559**	**5**	**5**	**10**	**2**

NOTE: THIS IS A LOW TRAFFIC VOLUME ROAD AS DEFINED IN SECTION 604.03, STANDARD SPECIFICATIONS FOR HIGHWAY CONSTRUCTION.

* QUANTITY ESTIMATED.
SEE SECTION 104.03 OF THE STD. SPECS.
TO BE USED IF AND WHERE DIRECTED BY THE ENGINEER.

DATE REVISED	DATE FILMED	DATE REVISED	DATE FILMED	FED.RD. DIST.NO.	STATE	FED.AID PROJ.NO.	SHEET NO.	TOTAL SHEETS
				6	ARK.			
				JOB NO.		070513	37	109
				(2)	QUANTITIES			

CLEARING AND GRUBBING

STATION	STATION	LOCATION	CLEARING	GRUBBING
			STATION	
111+00	123+40	HWY. 51	13	13
299+20	303+20	RAMP 4	4	4
TOTALS:			17	17

REMOVAL AND DISPOSAL OF FENCE

STATION	STATION	LOCATION	FENCE	GATES
			LIN. FT.	EACH
125+38	125+73	HWY.51 RT.	35	
125+75		HWY.51 LT.		1
125+97	128+29	HWY.51 RT.	232	
TOTALS:			267	1

REMOVAL AND DISPOSAL OF CULVERTS

STATION	DESCRIPTION	PIPE CULVERTS
		EACH
2612+50	I-30 WESTBOUND 24" R.C. PIPE CULVERT	1
116+52	HWY. 51 LT.	1
116+54	HWY. 51 LT.	1
119+41	HWY. 51 LT.	1
119+42	HWY. 51 LT.	1
TOTALS:		5

NOTE: QUANTITIES SHOWN ABOVE SHALL INCLUDE REMOVAL & DISPOSAL OF ALL HEADWALLS AND FLARED END SECTIONS IF APPLICABLE.

REMOVAL AND DISPOSAL OF ITEMS

STATION	STATION	LOCATION	GUARDRAIL	MAILBOXES	CONCRETE CURB
			LIN. FT.	EACH	LIN.FT.
110+12		HWY. 51 RT.			200
111+65		HWY. 51 LT.			176
124+00		HWY. 51 LT.			212
124+19		HWY. 51 RT.			174
114+37	116+82	HWY. 51 LT.	245		
115+85	116+80	HWY. 51 LT.	95		
119+12	122+06	HWY. 51 LT.	294		
119+13	120+23	HWY. 51 LT.	110		
126+00		HWY. 51 LT.		1	
2608+36	2611+05	I-30 RT.	269		
2611+46	2614+15	I-30 LT.	269		
2611+97	2612+97	I-30 RT.	100		
			1382	1	762

STATE OF ARKANSAS
LICENSED PROFESSIONAL ENGINEER
No.14994
DUSTIN L. TACKETT

DIGITALLY SIGNED 9/2/22

EARTHWORK

STATION	STATION	LOCATION / DESCRIPTION	UNCLASSIFIED EXCAVATION	COMPACTED EMBANKMENT
			CU. YDS.	
ENTIRE	PROJECT	STAGE 1 - HWY. 51	73	
ENTIRE	PROJECT	STAGE 2 - HWY. 51*	6472	24835
ENTIRE	PROJECT	STAGE 3A - HWY. 51	3859	458
ENTIRE	PROJECT	STAGE 2 - I-30 W	66	2830
ENTIRE	PROJECT	STAGE 2 - I-30 E	18	2623
ENTIRE	PROJECT	STAGE 1 - RAMP 1		
ENTIRE	PROJECT	STAGE 1 - RAMP 4 DETOUR	74	1179
ENTIRE	PROJECT	STAGE 2 - RAMP 1	231	60
ENTIRE	PROJECT	STAGE 2 - RAMP 2	841	155
ENTIRE	PROJECT	STAGE 2 - RAMP 3	1444	442
ENTIRE	PROJECT	STAGE 2 - RAMP 4	284	1021
ENTIRE	PROJECT	STAGE 3A - RAMP 4		772
ENTIRE	PROJECT	STAGE 3B - RAMP 4 DETOUR	1240	
ENTIRE	PROJECT	DRIVEWAYS	72	183
ENTIRE	PROJECT	MSE RETAINING WALL NO. 1	965	
ENTIRE	PROJECT	MSE RETAINING WALL NO. 2	954	
TOTALS:			16593	34558

* 1483 CU. YDS. DEDUCTED FROM STAGE 2 COMPACTED EMBANKMENT VOLUME AS DETERMINED BY THE END AREA METHOD TO ACCOUNT FOR SELECT GRANULAR BACKFILL BEHIND RETAINING WALLS

SOIL STABILIZATION

STATION	STATION	LOCATION / DESCRIPTION	SOIL STABILIZATION
			TON
ENTIRE	PROJECT	TO BE USED IF AND WHERE	200
		DIRECTED BY THE ENGINEER	
TOTAL:			200

QUANTITY ESTIMATED.
SEE SECTION 104.03 OF THE STD. SPECS.

FLOWABLE SELECT MATERIAL

STATION	LOCATION	CU. YD.
113+50	HWY. 51 - 15" X 54' R.C. PIPE CULVERT	5
122+50	HWY. 51 - 15" X 63' R.C. PIPE CULVERT	6
TOTAL:		11

CONCRETE BASE

STATION	STATION	LOCATION	LENGTH	PORTLAND CEMENT CONCRETE BASE	
				AVG. WID.	6" U.T.
			FEET	FEET	SQ. YD.
203+93.19	204+55.66	RAMP 1	62.47	23.22	161.17
205+05.53	205+60.74	RAMP 2	55.21	33.62	206.24
303+99.39	304+60.62	RAMP 4	61.23	31.65	215.33
123+90.55	124+53.33	HWY. 51 RT.	62.78	22.55	157.30
TOTAL:					740.04

DRIVEWAYS & TURNOUTS

STATION	SIDE	LOCATION	WIDTH	ACHM SURFACE COURSE (1/2") 220 LBS. PER SQ. YD. (PG 64-22)		AGGREGATE BASE COURSE (CLASS 7)	SIDE DRAINS			STANDARD DRAWINGS
							18"	24"	28"X20"	
			FEET	SQ. YD.	TON	TON	LIN. FT.			
114+00	RT.	HWY. 51	16	106.95	11.76	43.67				PCC-1, PCM-1, PCP-1, PCP-2, PCP-3
125+87	RT.	HWY. 51	16	108.45	11.93	44.28		41		PCC-1, PCM-1, PCP-1, PCP-2, PCP-3
125+87	LT.	HWY. 51	16	212.55	23.38	86.79	45			PCC-1, PCM-1, PCP-1, PCP-2, PCP-3
128+44	RT.	HWY. 51	16	71.09	7.82	29.03			66	PCC-1, PCM-1, PCP-1, PCP-2, PCP-3
* ENTIRE PROJECT TEMPORARY DRIVES					10.00	100.00				
TOTALS				499.04	64.89	303.77	45	41	66	

BASIS OF ESTIMATE:
ACHM SURFACE COURSE (1/2").....94.7% MIN. AGGR.....5.3% ASPHALT BINDER
MAXIMUM NUMBER OF GYRATIONS = 115 FOR PG 64-22

* NOTE: QUANTITY ESTIMATED
SEE SECTION 104.03 OF THE STD. SPECS.
TO BE USED IF AND WHERE DIRECTED BY THE ENGINEER.

NOTE: FOR R.C. PIPE CULVERT INSTALLATIONS USE TYPE 3 BEDDING UNLESS OTHERWISE SPECIFIED.
NOTE: FOR C.M. PIPE CULVERT INSTALLATIONS USE TYPE 2 BEDDING UNLESS OTHERWISE SPECIFIED.

COLD MILLLING ASPHALT PAVEMENT

STATION	STATION	LOCATION	AVG. WIDTH	COLD MILLING ASPHALT PAVEMENT
			FEET	SQ. YD.
107+00.00	108+00.00	MAIN LANES	32.00	355.56
128+50.00	129+50.00	MAIN LANES	26.00	288.89
202+00.00	203+00.00	RAMP 1	25.00	277.78
208+42.46	209+42.46	RAMP 2	25.50	283.33
309+00.00	310+00.00	RAMP 3	25.50	283.33
299+19.69	300+19.69	RAMP 4	26.00	288.89
TOTAL:				1777.78

NOTE: AVERAGE MILLING DEPTH 1".

STOCKPILE LOCATION:
S.E. QUAD. OF INTERCHANGE LAT 33°54'11" N, LONG 93°17'43" W

DLTackett 9/2/2022 4:25:11 PM
WORKSPACE: AHTD
L:\2017\17017634 - 070513 I-30 Str-Apprs Hwy 51\Drawings\r070513_QTY_01.dgn
REVISED DATE:

DATE REVISED	DATE FILMED	DATE REVISED	DATE FILMED	FED.RD. DIST.NO.	STATE	FED.AID PROJ.NO.	SHEET NO.	TOTAL SHEETS
11/3/2022				6	ARK.			
				JOB NO.		070513	38	109
				(2)	QUANTITIES			

ACHM PATCHING OF EXISTING ROADWAY

DESCRIPTION	TON
ENTIRE PROJECT - TO BE USED IF AND WHERE	100
DIRECTED BY THE ENGINEER	
TOTAL:	**100**

NOTE: QUANTITY ESTIMATED.
SEE SECTION 104.03 OF THE STD. SPECS.

ASPHALT CONCRETE PATCHING FOR MAINTENANCE OF TRAFFIC

LOCATION	TON	TACK COAT GALLON
ENTIRE PROJECT - TO BE USED IF AND WHERE	10	20
DIRECTED BY THE ENGINEER		
TOTALS:	**10**	**20**

BASIS OF ESTIMATE:
ASPHALT CONCRETE PATCHING FOR MAINTENANCE OF TRAFFIC…25 TON/MILE
TACK COAT FOR MAINTENANCE OF TRAFFIC……....50 GAL./MILE

STATE OF ARKANSAS
LICENSED PROFESSIONAL ENGINEER
No.14994
DUSTIN L. TACKETT
DIGITALLY SIGNED 11/3/22

APPROACH GUTTERS AND SLABS

STATION	STATION	LOCATION	APPROACH GUTTER (TYPE F)	APPROACH SLABS (TYPE SPECIAL)	REINFORCING STEEL-RDWY. (GR. 60)	AGGREGATE BASE CRS. (CLASS 7)
			CU.YD.	CU.YD.	POUND	TON
116+63.92	116+98.92	HWY. 51 LT.	4.20		210	
116+63.92	116+98.92	HWY. 51		54.32	6040	29.32
116+63.92	116+98.92	HWY. 51 RT.	4.20		210	
119+01.08	119+36.08	HWY. 51 LT.	4.20		210	
119+01.08	119+36.08	HWY. 51		54.32	6040	29.32
119+01.08	119+36.08	HWY. 51 RT.	4.20		210	
TOTALS:			**16.80**	**108.64**	**12920**	**58.64**

CONCRETE DITCH PAVING

STATION	STATION	LOCATION	LENGTH	"W"	CONC. DITCH PAVING (TYPE B)	SOLID SODDING	WATER
			LIN. FT.	FEET	SQ. YD.	SQ. YD.	M. GAL.
114+00.00	117+15.00	HWY. 51 RT.	315.00	6.00	210.00	140.00	1.76
124+65.00	125+50.00	HWY. 51 LT.	85.00	6.00	56.67	37.78	0.48
2612+30.00	2612+50.00	I-30 LT.	20.00	6.00	13.33	8.89	0.11
2612+30.00	2612+85.00	I-30 RT.	55.00	6.00	36.67	24.44	0.31
TOTALS:					**316.67**	**211.11**	**2.66**

BASIS OF ESTIMATE:
WATER.....12.6 GAL. / SQ. YD. OF SOLID SODDING.

CULVERT CLEAN OUT

STATION	LOCATION	EACH
108+92	HWY. 51	1
206+14	RAMP 2	1
2612+50	I-30 WESTBOUND	1
2612+50	I-30 EASTBOUND	1
TOTAL:		**4**

STRUCTURES

STATION	DESCRIPTION	REINFORCED CONCRETE PIPE CULVERT (CLASS III) 15"	(CLASS III) 24"	(CLASS III) 36"	FLARED END SECTIONS FOR R.C. PIPE CULVERTS 24"	36"	TEMPORARY CULVERTS 18"	SOLID SODDING	WATER	STD. DWG. NOS.
		LIN. FT.			EACH		LIN. FT.	SQ.YD.	M.GAL.	
108+92	HWY. 51 - EXTEND 36" R.C. PIPE CULVERT LT.			5		1		17	0.21	FES-1, FES-2, PCC-1
108+92	HWY. 51 - EXTEND 36" R.C. PIPE CULVERT RT.			7		1		17	0.21	FES-1, FES-2, PCC-1
113+50	HWY. 51 - INSTALL 15" R.C. PIPE CULVERT	54								PCC-1
122+50	HWY. 51 - INSTALL 15" R.C. PIPE CULVERT	63								PCC-1
122+78	HWY. 51 - EXTEND 36" R.C. PIPE CULVERT RT.			48		1		17	0.21	FES-1, FES-2, PCC-1
206+14	RAMP 2 - EXTEND 24" R.C. PIPE CULVERT LT.		15		1			8	0.10	FES-1, FES-2, PCC-1
206+14	RAMP 2 - EXTEND 24" R.C. PIPE CULVERT RT.		6		1			8	0.10	FES-1, FES-2, PCC-1
301+48	RAMP 4 - EXTEND 36" R.C. PIPE CULVERT RT.			17		1		17	0.21	FES-1, FES-2, PCC-1
2612+50	I-30 - EXTEND 24" R.C. PIPE CULVERT LT.		4		1			8	0.10	FES-1, FES-2, PCC-1
2612+50	I-30 - EXTEND 24" R.C. PIPE CULVERT RT.		4		1			8	0.10	FES-1, FES-2, PCC-1
12+00	RAMP 4 DETOUR - INSTALL 18" PIPE CULVERT						51			PCC-1
TOTALS:		**117**	**29**	**77**	**4**	**4**	**51**	**100**	**1.24**	

BASIS OF ESTIMATE:
WATER.....12.6 GAL. / SQ. YD. OF SOLID SODDING

4" PIPE UNDERDRAIN

STATION	STATION	LOCATIONS	4" PIPE UNDERDRAINS	UNDERDRAIN OUTLET PROTECTORS
			LIN. FT.	EACH
* ENTIRE PROJECT TO BE USED IF AND			500	4
WHERE DIRECTED BY THE ENGINEER				
TOTALS:			**500**	**4**

* NOTE: QUANTITY ESTIMATED.
SEE SECTION 104.03 OF THE STD. SPECS.

SELECTED PIPE BEDDING

LOCATION	SELECTED PIPE BEDDING
	CU.YD.
ENTIRE PROJECT TO BE USED IF	
AND WHERE DIRECTED BY THE	50
ENGINEER	
TOTAL:	**50**

NOTE: QUANTITY ESTIMATED.
SEE SECTION 104.03 OF THE STD. SPECS.

GUARDRAIL

STATION	STATION	LOCATION	GUARDRAIL (TYPE A)	THRIE BEAM GUARDRAIL TERMINAL	GUARDRAIL TERMINAL (TYPE 2)	TERMINAL ANCHOR POST (TYPE 1)
			LIN. FT.	EACH		
114+69.78	116+88.53	HWY. 51 RT.	150	1	1	
115+44.75	116+88.50	HWY. 51 LT.	75	1	1	
119+11.47	121+30.22	HWY. 51 LT.	150	1	1	
119+11.50	120+55.25	HWY. 51 RT.	75	1	1	
2611+97.00	2612+97.00	I-30 RT.	75			1
TOTALS:			**525**	**4**	**4**	**1**

FENCING

STATION	STATION	LOCATION	WIRE FENCE (TYPE D-1)
			LIN. FT.
125+38	125+73	HWY. 51 RT.	35
125+98	128+29	HWY. 51 RT.	231
TOTALS:			**266**

* DENOTES ALTERNATE BID ITEM.

DLTackett 11/2/2022 3:40:50 PM
WORKSPACE: AHTD
L:\20IT\170I7634 - 070513 I-30 Str-Apprs Hwy 5\Drawings\r070513_QTY_01.dgn
REVISED DATE:

EROSION CONTROL

STATION	STATION	LOCATION	PERMANENT EROSION CONTROL						TEMPORARY EROSION CONTROL									
			SEEDING	LIME	MULCH COVER	WATER	SECOND SEEDING APPLICATION	TEMPORARY SEEDING	MULCH COVER	WATER	FILTER SOCK (18") (E-3)	SAND BAG DITCH CHECKS (E-5)	ROCK DITCH CHECKS (E-6)	SILT FENCE (E-11)	DIVERSION DITCH (E-8)	PIPE FOR SLOPE DRAINS SLOPE DRAIN (E-12)	DUMPED RIPRAP SLOPE DRAIN (E-12)	*SEDIMENT REMOVAL & DISPOSAL
			ACRE	TON	ACRE	M.GAL.	ACRE	ACRE	ACRE	M.GAL.	LIN. FT.	BAG	CU.YD.	LIN. FT.	LIN. FT.	LIN. FT.	CU.YD.	CU. YD.
ENTIRE	PROJECT	CLEARING AND GRUBBING						7.79	7.79	158.9	260	484	390	1686				110
ENTIRE	PROJECT	STAGE 1						0.21	0.21	4.3		22	30					3
ENTIRE	PROJECT	STAGE 2						4.62	4.62	94.2		330	225		550	55	4	30
ENTIRE	PROJECT	STAGE 3						1.18	1.18	24.1		132	30					8
ENTIRE	PROJECT	STAGE 3A						1.46	1.46	29.8		66	15					4
ENTIRE	PROJECT	STAGE 3B						0.32	0.32	6.5		22						1
*ENTIRE PROJECT TO BE USED IF AND WHERE DIRECTED BY THE ENGINEER.			10.59	21.18	10.59	1080.2	10.59	3.89	3.89	79.4	100	264	173	422				16
TOTALS:			**10.59**	**21.18**	**10.59**	**1080.2**	**10.59**	**19.47**	**19.47**	**397.2**	**360**	**1320**	**863**	**2108**	**550**	**55**	**4**	**172**

BASIS OF ESTIMATE:
LIME .....2 TONS / ACRE OF SEEDING
WATER.....102.0 M.G. / ACRE OF SEEDING
WATER.....20.4 M.G. / ACRE OF TEMPORARY SEEDING
SAND BAG DITCH CHECKS.....22 BAGS / LOCATION
ROCK DITCH CHECKS.....15 CU.YD./LOCATION

NOTE: THE TEMPORARY EROSION CONTROL DEVICES SHOWN ABOVE AND ON THE PLANS SHALL BE INSTALLED IN SUCH A SEQUENCE AS TO DETER EROSION AND SEDIMENTATION ON U.S. WATERWAYS AS EXPLAINED BY THE NATIONAL POLLUTANT DISCHARGE ELIMINATION SYSTEM PERMIT.

*QUANTITIES ESTIMATED.
SEE SECTION 104.03 OF THE STD. SPECS.

STATE OF ARKANSAS
LICENSED PROFESSIONAL ENGINEER
No.14994
DUSTIN L. TACKETT
DIGITALLY SIGNED 9/2/22

EROSION CONTROL MATTING

STATION	STATION	LOCATION	LENGTH	CLASS 3
			LIN. FT.	SQ. YD.
107+00.00	108+93.00	HWY.51 RT.	193.00	171.56
110+05.00	110+22.00	HWY.51 LT.	17.00	15.11
110+97.00	113+85.00	HWY.51 RT.	288.00	256.00
119+05.00	122+65.00	HWY.51 RT.	360.00	320.00
119+01.00	123+02.00	HWY.51 LT.	401.00	356.44
125+06.00	125+66.00	HWY.51 RT.	60.00	53.33
125+09.00	128+27.00	HWY.51 RT.	318.00	282.67
128+60.00	129+50.00	HWY.51 RT.	90.00	80.00
126+10.00	129+50.00	HWY.51 LT.	340.00	302.22
202+00.00	205+00.00	RAMP 1 LT.	300.00	266.67
205+22.00	209+00.00	RAMP 2 RT.	378.00	336.00
205+47.00	209+00.00	RAMP 2 LT.	353.00	313.78
299+16.69	304+33.00	RAMP 4 RT.	516.31	458.94
305+92.00	310+00.00	RAMP 3 LT.	408.00	362.67
305+17.00	310+00.00	RAMP 3 RT.	483.00	429.33
08+50.00	09+60.00	DRIVE 125+87 RT.	110.00	97.78
2607+78.00	2612+30.00	I-30 WESTBOUND	452.00	401.78
2609+00.00	2612+30.00	I-30 EASTBOUND	330.00	293.33
2612+50.00	2614+50.00	I-30 EASTBOUND	200.00	177.78
TOTAL:				**4975.39**

NOTE: AVERAGE WIDTH = 8'-0"

CONCRETE ISLAND

STATION	LOCATION	CURB FACE TYPE	CONCRETE ISLAND
			SQ.YD.
110+16	HWY. 51 RT.	B	75
111+40	HWY. 51 LT.	B	97
123+71	HWY. 51 RT.	B	110
124+08	HWY. 51 LT	B	120
TOTAL:			**402**

MAILBOXES

LOCATION	MAILBOXES	MAILBOX SUPPORTS (SINGLE)
	EACH	
ENTIRE PROJECT	1	1
TOTALS:	**1**	**1**

BENCH MARKS

STATION	LOCATION	BENCH MARKS
		EACH
116+98	HWY.51 SE END OF BRIDGE NO. 3873	1
TOTAL:		**1**

NOTE: SHOWN FOR INFORMATION ONLY. BENCH MARKS SHALL BE FURNISHED AND PLACED BY STATE FORCES.

DELINEATORS

STATION	STATION	LOCATION	TYPE-2 DELINEATORS (WHITE-RED)	TYPE-2 DELINEATORS (YELLOW-RED)
			EACH	EACH
202+00.00	204+78.00	RAMP 1	10	10
305+25.00	310+00.00	RAMP 3	17	17
TOTALS:			**27**	**27**

RETAINING WALLS

STATION	STATION	LOCATION	CONCRETE DITCH PAVING (TYPE B)	SELECT GRANULAR BACKFILL	AGGREGATE BASE COURSE (CLASS 7)	RETAINING WALL	TEXTURED COATING FINISH	TEMPORARY RETAINING WALL
			SQ. YD.	CU. YDS.	TON	SQ. FT.	SQ. YD.	SQ. FT.
2611+34	2612+53	I-30 RT. (WALL NO. 1)	97	1515	185	2880	244	1360
2611+47	2612+68	I-30 LT. (WALL NO. 2)	102	1667	278	3028	250	1520
TOTALS:			199	3182	463	5908	494	2880

DATE REVISED	DATE FILMED	DATE REVISED	DATE FILMED	FED.RD. DIST.NO.	STATE	FED.AID PROJ.NO.	SHEET NO.	TOTAL SHEETS
				6	ARK.			
				JOB NO.		070513	40	109
				(2)		QUANTITIES		

STATE OF ARKANSAS
LICENSED PROFESSIONAL ENGINEER
No. 14994
DUSTIN L. TACKETT

DIGITALLY SIGNED 9/2/22

BASE AND SURFACING

STATION	STATION	LOCATION	LENGTH	AGGREGATE BASE COURSE		TACK COAT							ACHM BASE COURSE (1 1/2")				ACHM BINDER COURSE (1")					ACHM SURFACE COURSE (1/2")											
				TON / STATION	TON	(0.05 GAL. PER SQ. YD.)			(0.17 GAL. PER SQ. YD.)			TOTAL GALLONS	AVG. WID.	SQ.YD.	POUND / SQ.YD.	PG 76-22	AVG. WID.	SQ.YD.	POUND / SQ.YD.	PG 64-22	PG 76-22	AVG. WID.	SQ.YD.	POUND / SQ.YD.	PG 64-22	PG 76-22	AVG. WID.	SQ.YD.	POUND / SQ.YD.	PG 64-22	PG 76-22	TOTAL PG 64-22	TOTAL PG 76-22
			FEET			TOTAL WID. FEET	SQ.YD.	GALLON	TOTAL WID. FEET	SQ.YD.	GALLON		FEET			TON	FEET			TON	TON	FEET			TON	TON	FEET			TON	TON	TON	TON
MAIN LANES																																		
107+00.00	108+00.00	HWY. 51 - TRANSITION	100.00						32.00	355.56	60.45	60.45										32.00	355.56	220.00	39.11							39.11	
108+00.00	108+72.85	HWY. 51 - OVERLAY	72.85						30.00	242.83	41.28	41.28										30.00	242.83	220.00	26.71							26.71	
108+72.85	111+27.51	HWY. 51 - NOTCH AND WIDEN	254.66	86.50	220.28	17.35	491.04	24.55	17.50	495.17	84.18	108.73					8.73	246.99	330.00	40.75		30.00	848.87	220.00	93.38		8.63	244.05	220.00	26.85		120.23	
111+27.51	116+27.42	HWY. 51 - FULL DEPTH	499.91	173.00	864.84	44.71	2483.33	124.17				124.17					22.46	1247.44	330.00	205.83		30.00	1666.37	220.00	183.30		22.25	1235.89	220.00	135.95		319.25	
119+72.58	120+10.88	HWY. 51 - FULL DEPTH	38.30	173.00	66.26	44.71	190.26	9.51				9.51					22.46	95.57	330.00	15.77		30.00	127.67	220.00	14.04		22.25	94.69	220.00	10.42		24.46	
120+10.88	123+94.91	HWY. 51 - FULL DEPTH	384.03	173.00	664.37	44.71	1907.69	95.38				95.38					22.46	958.28	330.00	158.12		30.00	1280.10	220.00	140.81		22.25	949.41	220.00	104.44		245.25	
123+94.91	126+75.55	HWY. 51 - NOTCH AND WIDEN	280.64	86.50	242.75	17.35	541.14	27.06	17.50	545.69	92.77	119.83					8.73	272.19	330.00	44.91		30.00	935.47	220.00	102.90		8.63	268.95	220.00	29.58		132.48	
126+75.55	128+25.55	HWY. 51 - NOTCH AND WIDEN	150.00	51.00	76.50	6.35	105.90	5.30	25.00	416.67	70.83	76.13					3.23	53.82	330.00	8.88		30.00	500.00	220.00	55.00		3.13	52.08	220.00	5.73		60.73	
128+25.55	128+50.00	HWY. 51 - NOTCH AND WIDEN	24.45	51.00	12.47	6.35	17.26	0.86	25.00	67.92	11.55	12.41					3.23	8.77	330.00	1.45		30.00	81.50	220.00	8.97		3.13	8.49	220.00	0.93		9.90	
128+50.00	129+50.00	HWY. 51 - TRANSITION	100.00	47.00	47.00				26.00	288.89	49.11	49.11										26.00	288.89	220.00	31.78							31.78	
202+00.00	203+00.00	RAMP 1 - TRANSITION	100.00	328.75	328.75				25.00	277.78	47.22	47.22										25.00	277.78	220.00		30.56							30.56
203+00.00	203+53.78	RAMP 1 - NOTCH AND WIDEN	53.78	328.75	176.80				15.00	89.63	15.24	15.24										25.00	149.39	220.00		16.43							16.43
203+53.78	204+83.50	RAMP 1 TURNOUT - NOTCH AND WIDEN	129.72	439.94	570.69				60.46	871.43	148.14	148.14										65.56	944.94	220.00		103.94							103.94
205+12.03	206+44.09	RAMP 2 TURNOUT - NOTCH AND WIDEN	132.06	476.67	629.49				50.78	745.11	126.67	126.67	4.92	72.19	1210.00	43.67	4.63	67.94	330.00		11.21	65.55	961.84	220.00		105.80	4.53	66.47	220.00		7.31		113.11
206+44.09	208+42.46	RAMP 2 - NOTCH AND WIDEN	198.37	328.75	652.14				15.00	330.62	56.21	56.21										25.00	551.03	220.00		60.61							60.61
208+42.46	209+42.46	RAMP 2 - TRANSITION	100.00	328.75	328.75				25.50	283.33	48.17	48.17										25.50	283.33	220.00		31.17							31.17
305+12.69	306+31.03	RAMP 3 TURNOUT - NOTCH AND WIDEN	118.34	597.28	706.82				37.62	494.66	84.09	84.09	29.36	386.05	1210.00	233.56	29.07	382.24	330.00		63.07	73.20	962.50	220.00		105.88	28.97	380.92	220.00		41.90		147.78
306+31.03	308+45.99	RAMP 3 - NOTCH AND WIDEN	214.96	344.00	739.46	21.50	513.51	25.68	15.00	358.27	60.91	86.59	4.44	105.99	1210.00	64.12	4.15	99.02	330.00		16.34	25.00	597.11	220.00		65.68	4.04	96.53	220.00		10.62		76.30
308+45.99	309+00.00	RAMP 3 - NOTCH AND WIDEN	54.01	328.75	177.56				15.00	90.02	15.30	15.30										25.00	150.03	220.00		16.50							16.50
309+00.00	310+00.00	RAMP 3 - TRANSITION	100.00	328.75	328.75				25.50	283.33	48.17	48.17										25.50	283.33	220.00		31.17							31.17
299+19.69	300+19.69	RAMP 4 - TRANSITION	100.00	328.75	328.75				26.00	288.89	49.11	49.11										26.00	288.89	220.00		31.78							31.78
300+19.69	303+00.00	RAMP 4 - NOTCH AND WIDEN	280.31	328.75	921.52				15.00	467.18	79.42	79.42										25.00	778.64	220.00		85.65							85.65
303+00.00	303+32.17	RAMP 4 - FULL DEPTH	32.17	328.75	105.76	78.83	281.78	14.09				14.09	16.04	57.34	1210.00	34.69	15.46	55.25	330.00		9.12	25.00	89.36	220.00		9.83	15.25	54.51	220.00		6.00		15.83
303+32.17	304+89.63	RAMP 4 TURNOUT - FULL DEPTH	157.46	663.07	1044.07								54.76	958.06	1210.00	579.63	53.67	938.99	330.00		154.93	67.09	1173.78	220.00		129.12	53.67	938.99	220.00		103.29		232.41
ADDITIONAL FOR LEVELING																																		
108+00.00	108+72.85	HWY. 51 - OVERLAY	72.85			30.00	242.83	12.14				12.14										30.00	242.83	VAR.	18.00							18.00	
108+72.85	111+27.51	HWY. 51 - NOTCH AND WIDEN	254.66			17.50	495.17	24.76				24.76										17.50	495.17	VAR.	133.61							133.61	
123+94.91	126+75.55	HWY. 51 - NOTCH AND WIDEN	280.64			17.50	545.69	27.28				27.28										17.50	545.69	VAR.	192.28							192.28	
126+75.55	128+25.55	HWY. 51 - NOTCH AND WIDEN	150.00			25.00	416.67	20.83				20.83										25.00	416.67	VAR.	79.66							79.66	
128+25.55	128+50.00	HWY. 51 - NOTCH AND WIDEN	24.45			25.00	67.92	3.40				3.40										25.00	67.92	VAR.	5.07							5.07	
203+00.00	203+53.78	RAMP 1 - NOTCH AND WIDEN	53.78			15.00	89.63	4.48				4.48										15.00	89.63	VAR.		1.97							1.97
203+53.78	204+83.50	RAMP 1 TURNOUT - NOTCH AND WIDEN	129.72			60.46	871.43	43.57				43.57										60.46	871.43	VAR.		18.65							18.65
205+12.03	206+44.09	RAMP 2 TURNOUT - NOTCH AND WIDEN	132.06			50.78	745.11	37.26				37.26										50.78	745.11	VAR.		68.20							68.20
206+44.09	208+42.46	RAMP 2 - NOTCH AND WIDEN	198.37			15.00	330.62	16.53				16.53										15.00	330.62	VAR.		70.69							70.69
305+12.69	306+31.03	RAMP 3 TURNOUT - NOTCH AND WIDEN	118.34			37.62	494.66	24.73				24.73										37.62	494.66	VAR.		22.31							22.31
306+31.03	308+45.99	RAMP 3 - NOTCH AND WIDEN	214.96			15.00	358.27	17.91				17.91										15.00	358.27	VAR.		43.90							43.90
308+45.99	309+00.00	RAMP 3 - NOTCH AND WIDEN	54.01			15.00	90.02	4.50				4.50										15.00	90.02	VAR.		6.34							6.34
300+19.69	303+00.00	RAMP 4 - NOTCH AND WIDEN	280.31			15.00	467.18	23.36				23.36										15.00	467.18	VAR.		89.34							89.34
ADDITIONAL FOR SUPERELEVATION																																		
108+72.85	111+27.51	HWY. 51 - NOTCH AND WIDEN	254.66	62.03	157.97																													
120+10.88	123+94.91	HWY. 51 - FULL DEPTH	384.03	100.17	384.68																													
123+94.91	126+75.55	HWY. 51 - NOTCH AND WIDEN	280.64	145.19	407.46																													
126+75.55	128+25.55	HWY. 51 - NOTCH AND WIDEN	150.00	38.69	58.04																													
206+44.09	208+42.46	RAMP 2 - NOTCH AND WIDEN	198.37	753.42	1494.56																													
300+19.69	303+00.00	RAMP 4 - NOTCH AND WIDEN	280.31	722.77	2026.00																													
ADDITIONAL FOR GUARDRAIL WIDENING																																		
114+26.78	116+88.53	HWY. 51	261.75	VAR.	70.21																	VAR.	116.43	220.00	12.81							12.81	
115+01.75	116+88.50	HWY. 51	186.75	VAR.	53.89																	VAR.	84.76	220.00	9.32							9.32	
119+11.47	121+73.22	HWY. 51	261.75	VAR.	52.12																	VAR.	82.87	220.00	9.12							9.12	
119+11.50	120+98.25	HWY. 51	186.75	VAR.	94.51																	VAR.	121.18	220.00	13.33							13.33	
ADDITIONAL FOR METHOD OF RAISING GRADE																																		
108+72.85	111+27.51	HWY. 51 - NOTCH AND WIDEN	254.66			17.50	495.17	24.76				24.76								66.58													
123+94.91	126+75.55	HWY. 51 - NOTCH AND WIDEN	280.64			17.50	545.69	27.28				27.28								297.45													
126+75.55	128+25.55	HWY. 51 - NOTCH AND WIDEN	150.00			25.00	416.67	20.83				20.83								33.14													
205+12.03	206+44.09	RAMP 2 TURNOUT - NOTCH AND WIDEN	132.06			50.78	745.11	37.26				37.26									20.13												
206+44.09	208+42.46	RAMP 2 - NOTCH AND WIDEN	198.37			15.00	330.62	16.53				16.53									0.51												
305+12.69	306+31.03	RAMP 3 TURNOUT - NOTCH AND WIDEN	118.34			37.62	494.66	24.73				24.73									12.58												
300+19.69	303+00.00	RAMP 4 - NOTCH AND WIDEN	280.31			15.00	467.18	23.36				23.36									134.76												
ADDITIONAL FOR MAINTENANCE OF TRAFFIC																																		
10+00.00	10+65.78	DETOUR RAMP 4 - NOTCH AND WIDEN	65.78	54.75	36.01	6.90	50.40	2.52				2.52					6.90	50.40	330.00	8.32	8.32	8.75	63.95	220.00	7.03							7.03	
10+65.78	13+04.75	DETOUR RAMP 4 - FULL DEPTH	238.97	116.00	277.21	15.29	406.03	20.30				20.30					15.29	406.03	330.00	66.99	66.99	19.00	504.49	220.00	55.49							55.49	
125+49.43	129+50.00	HWY. 51 - STAGE 1 FULL DEPTH SHOULDER	400.57	30.25	121.17	5.15	229.03	11.45				11.45					5.15	229.03	330.00	37.79	37.79	5.00	222.54	220.00	24.48							24.48	
112+06.34	113+13.95	HWY. 51 - STAGE 2 TEMP. VERTICAL TIE	107.61			30.00	358.70	17.94	30.00	358.70	60.98	78.92					30.00	2157.58	VAR.	180.45		30.00	358.70	VAR.	254.85							254.85	
121+76.06	123+94.91	HWY. 51 - STAGE 2 TEMP. VERTICAL TIE	218.85			30.00	729.50	36.48	30.00	729.50	124.02	160.50					30.00	7749.96	VAR.	318.71		30.00	729.50	VAR.	172.32							172.32	
TOTALS:					**14467.61**		**17015.87**	**850.79**		**8081.18**	**1373.82**	**2224.61**		**1579.63**		**955.67**		**15019.50**		**1485.14**	**535.75**		**21318.83**		**1683.37**	**1145.52**		**4390.98**		**313.90**	**169.12**	**1997.27**	**1314.64**

BASIS OF ESTIMATE:
ACHM SURFACE COURSE (1/2").....94.7% MIN. AGGR.....5.3% ASPHALT BINDER
ACHM BINDER COURSE (1").....95.6% MIN. AGGR.....4.4% ASPHALT BINDER
ACHM BASE COURSE (1 1/2").....96.0% MIN. AGGR.....4.0% ASPHALT BINDER
MAXIMUM NUMBER OF GYRATIONS = 115 FOR PG 64-22
MAXIMUM NUMBER OF GYRATIONS = 205 FOR PG 76-22
TACK COAT QUANTITIES WERE CALCULATED USING THE EMULSIFIED ASPHALT RATES. REFER TO SS-400-1 FOR THE RESIDUAL ASPHALT APPLICATION RATES.

DLTackett 9/2/2022 4:25:41 PM
WORKSPACE: AHTD
L:\2017\170763 4 - 070513 I-30 Str-Apprs Hwy 51\Drawings\r070513_01_01.dgn
REVISED DATE:

DATE REVISED	DATE FILMED	DATE REVISED	DATE FILMED	FED. ROAD DIST. NO.	STATE	FED. AID PROJ. NO.	SHEET NO.	TOTAL SHEETS
				6	ARK.			
				JOB NO.		070513	41	109
				(1) 07582		QUANTITIES		65151

SCHEDULE OF BRIDGE QUANTITIES - JOB. NO. 070513

BRIDGE NO.	NAME PLATE TITLE	UNIT OF STRUCTURE / ITEM NO.	205	801	SP, SS, & 802	SP, SS, & 802	SP & 803	SS & 804	SS & 804	SS & 805	SP, SS & 807	SS & 807	SS & 808	SS & 809	812	SS & 816	SP JOB 070513	SP JOB 070513	SP JOB 070513
		ITEM	REMOVAL OF EXISTING BRIDGE STRUCTURE (SITE NO. _)	UNCLASSIFIED EXCAVATION FOR STRUCTURES - BRIDGE	CLASS S CONCRETE - BRIDGE	CLASS S(AE) CONCRETE - BRIDGE	CLASS 2 PROTECTIVE SURFACE TREATMENT	REINFORCING STEEL - BRIDGE (GRADE 60)	EPOXY COATED REINFORCING STEEL (GRADE 60)	STEEL PILING (HP 14x73) (1)	STRUCTURAL STEEL IN PLATE GIRDER SPANS (A709, GR. 50)	PAINTING STRUCTURAL STEEL	ELASTOMERIC BEARINGS	SILICONE JOINT SEALANT	BRIDGE NAME PLATE (TYPE D)	CONCRETE RIPRAP	TEXTURED COATING FINISH	ARCHITECTURAL FINISH	SHORING (SITE NO. _)
		UNIT	LUMP SUM	CU. YD.	CU. YD.	CU. YD.	SQ. YD.	LB.	LB.	LIN. FT.	LB.	TON	CU. INCH	LIN. FT.	EACH	CU. YD.	SQ. YD.	SQ. FT.	LUMP SUM
07582	HIGHWAY 51 OVER I-30	END BENT NO. 1			35.25		13.1	4,720	470	250	557	0.3	2,160.0	33		22	20	34	
		INTERMEDIATE BENT NO. 2		192	156.70			30,720		864			2,340.0				99	421	
		END BENT NO. 3			35.25		13.1	4,720	470	250	557	0.3	2,160.0	33		20	20	34	
		200'-0" CONTINUOUS PLATE GIRDER UNIT				211.00	829.5		48,300		199,486	97.7			1		276	800	
		SITE NO. 1 (EXISTING BRIDGE NO. 03873)	1																1
		TOTALS FOR JOB NO. 070513		192	227.20	211.00	855.7	40,160	49,240	1,364	200,600	98.3	6,660.0	66	1	42	415	1,289	

(1) All steel piling shall be Grade 50 and are required to have approved driving points which will not be paid for directly, but will be considered subsidiary to the item "STEEL PILING (HP 14x73)".

STATE OF ARKANSAS
LICENSED PROFESSIONAL ENGINEER
No.8017
JOHN H. RUDDELL

Digitally Signed 09/02/2022

BRIDGE ENGINEER

SCHEDULE OF BRIDGE QUANTITIES
I-30 STR. & APPRS. (HWY. 51) (S)
CLARK COUNTY

ROUTE 51 SEC. 1

ARKANSAS STATE HIGHWAY COMMISSION

LITTLE ROCK, ARK.

DRAWN BY: HEW DATE: FEB. 2022 FILENAME: b070513_g1.dgn
CHECKED BY: JME DATE: JAN. 2022 SCALE: As Shown
DESIGNED BY: JJB DATE: NOV. 2021

BRIDGE NO. 07582 DRAWING NO. 65151

JMEdwards 9/2/2022 11:30:01 AM
WORKSPACE: ARDOT Bridge (2019)
L:\2017\17017634-070513 I-30 Str-Apprs Hwy 51\Drawings\b070513_S001_QT.dgn
REVISED DATE:

SUMMARY OF QUANTITIES

ITEM NUMBER	ITEM	QUANTITY	UNIT
201	CLEARING	17	STATION
201	GRUBBING	17	STATION
202	REMOVAL AND DISPOSAL OF CONCRETE CURB	762	LIN. FT.
202	REMOVAL AND DISPOSAL OF FENCE	267	LIN. FT.
202	REMOVAL AND DISPOSAL OF GATES	1	EACH
202	REMOVAL AND DISPOSAL OF MAILBOXES	1	EACH
202	REMOVAL AND DISPOSAL OF PIPE CULVERTS	5	EACH
202	REMOVAL AND DISPOSAL OF GUARDRAIL	1382	LIN. FT.
SS & 206	FLOWABLE SELECT MATERIAL	11	CU. YD.
SP, SS, & 210	UNCLASSIFIED EXCAVATION	16593	CU. YD.
SP	SELECT GRANULAR BACKFILL	3182	CU. YD.
SP & 210	COMPACTED EMBANKMENT	34558	CU. YD.
SP & 210	SOIL STABILIZATION	200	TON
SP, SS, & 303	AGGREGATE BASE COURSE (CLASS 7)	15293	TON
SP, SS, & 309	PORTLAND CEMENT CONCRETE BASE (6" UNIFORM THICKNESS)	740	SQ. YD.
SS & 401	TACK COAT	2245	GAL.
SP, SS, & 405	MINERAL AGGREGATE IN ACHM BASE COURSE (1 1/2")	917	TON
SP, SS, & 405	ASPHALT BINDER (PG 76-22) IN ACHM BASE COURSE (1 1/2")	38	TON
SP, SS, & 406	MINERAL AGGREGATE IN ACHM BINDER COURSE (1")	1932	TON
SP, SS, & 406	ASPHALT BINDER (PG 64-22) IN ACHM BINDER COURSE (1")	65	TON
SP, SS, & 406	ASPHALT BINDER (PG 76-22) IN ACHM BINDER COURSE (1")	24	TON
SP, SS, & 407	MINERAL AGGREGATE IN ACHM SURFACE COURSE (1/2")	3198	TON
SP, SS, & 407	ASPHALT BINDER (PG 64-22) IN ACHM SURFACE COURSE (1/2")	109	TON
SP, SS, & 407	ASPHALT BINDER (PG 76-22) IN ACHM SURFACE COURSE (1/2")	70	TON
SP & 412	COLD MILLING ASPHALT PAVEMENT	1778	SQ. YD.
SP, SS, & 414	ASPHALT CONCRETE PATCHING FOR MAINTENANCE OF TRAFFIC	10	TON
SP, SS, & 415	ACHM PATCHING OF EXISTING ROADWAY	100	TON
SP, SS, & 504	APPROACH SLABS	108.64	CU. YD.
SP, SS, & 504	APPROACH GUTTERS	16.80	CU. YD.
601	MOBILIZATION	1.00	LUMP SUM
SP & 602	FURNISHING FIELD OFFICE	1	EACH
SP, SS, & 603	MAINTENANCE OF TRAFFIC	1.00	LUMP SUM
603	18" TEMPORARY CULVERT	51	LIN. FT.
SS & 604	SIGNS	1489	SQ. FT.
SS & 604	BARRICADES	112	LIN. FT.
SS & 604	TRAFFIC DRUMS	199	EACH
SS & 604	FURNISHING AND INSTALLING PRECAST CONCRETE BARRIER	3559	LIN. FT.
604	CONSTRUCTION PAVEMENT MARKINGS	18537	LIN. FT.
604	REMOVABLE CONSTRUCTION PAVEMENT MARKINGS	808	LIN. FT.
604	REMOVAL OF CONSTRUCTION PAVEMENT MARKINGS	5819	LIN. FT.
SS & 604	ADVANCE WARNING ARROW PANEL	10	DAY
SP, SS, & 604	PORTABLE CHANGEABLE MESSAGE SIGN	2	WEEK
SP, SS, & 605	CONCRETE DITCH PAVING (TYPE B)	516	SQ. YD.
SS & 606	15" REINFORCED CONCRETE PIPE CULVERTS (CLASS III)	117	LIN. FT.
SS & 606	24" REINFORCED CONCRETE PIPE CULVERTS (CLASS III)	29	LIN. FT.
SS & 606	36" REINFORCED CONCRETE PIPE CULVERTS (CLASS III)	77	LIN. FT.
SP	CULVERT CLEAN OUT	4	EACH
SP, SS, & 606	18" SIDE DRAIN	45	LIN. FT.
SP, SS, & 606	24" SIDE DRAIN	41	LIN. FT.
SS & 606	28" X 20" SIDE DRAIN	66	LIN. FT.
SS & 606	24" FLARED END SECTIONS FOR REINFORCED CONCRETE PIPE CULVERTS	4	EACH
SS & 606	36" FLARED END SECTIONS FOR REINFORCED CONCRETE PIPE CULVERTS	4	EACH
SS & 606	SELECTED PIPE BEDDING	50	CU. YD.
SS & 611	4" PIPE UNDERDRAINS	500	LIN. FT.
SS & 611	UNDERDRAIN OUTLET PROTECTORS	4	EACH
SS & 617	GUARDRAIL (TYPE A)	525	LIN. FT.
SS & 617	TERMINAL ANCHOR POSTS (TYPE 1)	1	EACH
SS & 617	GUARDRAIL TERMINAL (TYPE 2)	4	EACH
SS & 617	THRIE BEAM GUARDRAIL TERMINAL	4	EACH
SS & 619	WIRE FENCE (TYPE D-1)	266	LIN. FT.
620	LIME	21	TON
620	SEEDING	10.59	ACRE
SS & 620	MULCH COVER	30.06	ACRE
620	WATER	1481.3	M. GAL.
621	TEMPORARY SEEDING	19.47	ACRE
621	SILT FENCE	2108	LIN. FT.
621	SAND BAG DITCH CHECKS	1320	BAG
621	DIVERSION DITCH	550	LIN. FT.
621	SEDIMENT REMOVAL AND DISPOSAL	172	CU. YD.
621	PIPE FOR SLOPE DRAINS	55	LIN. FT.
621	ROCK DITCH CHECKS	863	CU. YD.
SS & 621	FILTER SOCK (18")	360	LIN. FT.
623	SECOND SEEDING APPLICATION	10.59	ACRE
624	SOLID SODDING	311	SQ. YD.
626	EROSION CONTROL MATTING (CLASS 3)	4975	SQ. YD.
SP, SS, & 632	CONCRETE ISLAND	402	SQ. YD.
635	ROADWAY CONSTRUCTION CONTROL	1.00	LUMP SUM
637	MAILBOXES	1	EACH
637	MAILBOX SUPPORTS (SINGLE)	1	EACH
718	REFLECTORIZED PAINT PAVEMENT MARKING WHITE (6")	3652	LIN. FT.
718	REFLECTORIZED PAINT PAVEMENT MARKING YELLOW (6")	4088	LIN. FT.
718	REFLECTORIZED PAINT PAVEMENT MARKING WHITE (10")	551	LIN. FT.
719	THERMOPLASTIC PAVEMENT MARKING WHITE (8")	1007	LIN. FT.
719	THERMOPLASTIC PAVEMENT MARKING WHITE (12")	40	LIN. FT.
719	THERMOPLASTIC PAVEMENT MARKING (YIELD LINE)	80	LIN. FT.
719	THERMOPLASTIC PAVEMENT MARKING (ARROWS)	2	EACH
SP	ENHANCED THERMOPLASTIC PAVEMENT MARKING WHITE (6")	2188	LIN. FT.
SP	ENHANCED THERMOPLASTIC PAVEMENT MARKING YELLOW (6")	1872	LIN. FT.
721	RAISED PAVEMENT MARKERS (TYPE II)	87	EACH
SS & 728	DELINEATOR (TYPE 2)	54	EACH
SS & 731	TEMPORARY IMPACT ATTENUATION BARRIER	5	EACH
SS & 731	TEMPORARY IMPACT ATTENUATION BARRIER (REPAIR)	5	EACH
SP	RETAINING WALL	5908	SQ. FT.
SP	TEMPORARY RETAINING WALL	2880	SQ. FT.
SP	TEXTURED COATING FINISH	494	SQ. YD.
SS & 804	REINFORCING STEEL-ROADWAY (GRADE 60)	12920	POUND
SS & 816	DUMPED RIPRAP	4	CU. YD.
	STRUCTURES OVER 20' SPAN		
205	REMOVAL OF EXISTING BRIDGE STRUCTURE (SITE NO. 1)	1.00	LUMP SUM
636	BRIDGE CONSTRUCTION CONTROL	1.00	LUMP SUM
801	UNCLASSIFIED EXCAVATION FOR STRUCTURES-BRIDGE	192	CU. YD.
SP, SS, & 802	CLASS S CONCRETE-BRIDGE	227.20	CU. YD.
SP, SS, & 802	CLASS S(AE) CONCRETE-BRIDGE	211.00	CU. YD.
SP & 803	CLASS 2 PROTECTIVE SURFACE TREATMENT	855.7	SQ. YD.
SS & 804	REINFORCING STEEL-BRIDGE (GRADE 60)	40160	POUND
SS & 804	EPOXY COATED REINFORCING STEEL (GRADE 60)	49240	POUND
SS & 805	STEEL PILING (HP 14X73)	1354	LIN. FT.
SP, SS, & 807	STRUCTURAL STEEL IN PLATE GIRDER SPANS (A709, GR. 50)	200500	POUND
SS & 807	PAINTING STRUCTURAL STEEL	98.30	TON
SS & 808	ELASTOMERIC BEARINGS	6660.0	CU. IN.
SS & 809	SILICONE JOINT SEALANT	66	LIN. FT.
812	BRIDGE NAME PLATE (TYPE D)	1	EACH
SS & 816	CONCRETE RIPRAP	42	CU. YD.
SP	TEXTURED COATING FINISH	415	SQ. YD.
SP	ARCHITECTURAL FINISH	1289	SQ. FT.
SP	SHORING (SITE NO. 1)	1.00	LUMP SUM

REVISIONS

DATE	REVISION	SHEET NUMBER
11/3/2022	ADDED PRECAST CONCRETE BARRIER TO THE INSIDE SHOULDER OF I-30 WB LANES. UPDATED QUANTITY FOR FURNISHING AND INSTALLING PRECAST CONCRETE BARRIER, TEMPORARY IMPACT ATTENUATION BARRIER, AND TEMPORARY IMPACT ATTENUATION BARRIER (REPAIR). ADDED UNIT "EACH" UNDER 24" FLARED END SECTIONS FOR R.C. PIPE CULVERTS IN THE STRUCTURES QUANTITY TABLE. CHANGED UNIT FROM "TON" TO "CU. YD." FOR ITEM "DUMPED RIPRAP" IN THE SUMMARY OF QUANTITIES.	25, 36, 38, 42

STATE OF ARKANSAS
LICENSED PROFESSIONAL ENGINEER
No. 14994
DUSTIN L. TACKETT
DIGITALLY SIGNED 11/3/22

SUMMARY OF QUANTITIES AND REVISIONS

DATE REVISED	DATE FILMED	DATE REVISED	DATE FILMED	FED.RD. DIST.NO.	STATE	FED.AID PROJ.NO.	SHEET NO.	TOTAL SHEETS
11/3/2022				6	ARK.	070513	42	109

(2) SUMMARY OF QUANTITIES AND REVISIONS

STATE OF ARKANSAS ★★★ LICENSED PROFESSIONAL ENGINEER ★★★ No.14994 DUSTIN L. TACKETT

DIGITALLY SIGNED 9/2/22

SURVEY CONTROL COORDINATES

Project Name: s070513
Date: 7/1/2020
Coordinate System: ARKANSAS STATE PLANE - SOUTH ZONE BASED ON GPS CONTROL, PROJECTED TO GROUND.
Units: U.S. SURVEY FOOT

Point Name	Northing	Easting	Elev	Feature	Description
1	1764098.2060	919916.2399	229.858	CTL	ARDOT STD. MON. STAMPED PN: 1
2	1764501.3759	919442.7442	234.846	CTL	ARDOT STD. MON. STAMPED PN: 2
3	1764987.9879	919087.0101	254.036	CTL	ARDOT STD. MON. STAMPED PN: 3
4	1765521.8240	918714.0789	239.574	CTL	ARDOT STD. MON. STAMPED PN: 4
5	1766239.6634	918412.0443	226.362	CTL	ARDOT STD. MON. STAMPED PN: 5
6	1764466.3032	918617.2979	228.074	CTL	ARDOT STD. MON. STAMPED PN: 6
7	1764757.1727	919681.6110	236.966	CTL	ARDOT STD. MON. STAMPED PN: 7
8	1765752.9779	919530.1217	246.085	CTL	ARDOT STD. MON. STAMPED PN: 8
9	1765324.7573	918416.7902	237.768	CTL	ARDOT STD. MON. STAMPED PN: 9
10	1764808.2905	918509.5900	228.990	CTL	ARDOT STD. MON. STAMPED PN: 10
100	1766356.7826	920388.7852	241.918	GPS	ARDOT GPS #100034
101	1765340.1259	919505.6219	245.277	GPS	ARDOT GPS #100034A
900	1764353.7183	919563.1624	232.842	TBM	CHS SQ
901	1764988.6003	919076.7288	255.164	TBM	CHS SQ
902	1766230.6837	918424.0710	225.512	TBM	CHS SQ

*Note - Rebar and Cap - Standard - 5/8" Rebar with 2" Aluminum Cap stamped
*(standard markings common to all caps), or as indicated
(other markings indicated in the point description of the individual point).
USE CAF = 1.0 FOR STAKEOUT FOR THIS PROJECT
A PROJECT CAF OF 0.999913896573 HAS BEEN USED TO COMPUTE THE ABOVE GROUND COORDINATES.
THIS CAF IS INTENDED FOR USE WITHIN THE PROJECT LIMITS.
GRID DISTANCE = GROUND DISTANCE X CAF.
GRID COORDINATES ARE STORED UNDER FILE NAME s070513gi.ctl
HORIZONTAL DATUM: NAD 83 (2011)
VERTICAL DATUM: NAVD 88 POSITIONAL ACCURACY THIRD ORDER, UNLESS SPECIFIED OTHERWISE AT A SPECIFIC POINT.

REFERENCE POINTS (1500 SERIES) ARE TO BE USED TO ESTABLISH CONTROL IF THE PRIMARY CONTROL POINTS LISTED ABOVE HAVE BEEN DESTROYED.
REFERENCE POINTS ARE NOT TO BE USED FOR VERTICAL CONTROL

BASIS OF BEARING:
ARKANSAS STATE PLANE GRID BEARINGS - 0302-SOUTH ZONE
DETERMINED FROM GPS CONTROL POINTS: 100034 - 100034A
CONVERGENCE ANGLE: 0°43′32.00" LEFT AT LAT N33°54′12.09" LON W93°17′46.86"
GRID AZIMUTH = ASTRONOMICAL AZIMUTH - CONVERGENCE ANGLE.

ALIGNMENT NAME: HWY. 51

POINT	STATION	TYPE	NORTHING	EASTING
8000	100+00.00	POB	1764105.1493	920393.2193
8001	101+65.44	PC	1764094.6035	920228.1154
8002	109+47.51	PT	1764418.8226	919553.6264
8003	112+02.20	PC	1764627.4495	919407.5488
8004	119+97.75	PT	1765262.7806	918929.0001
8005	121+60.88	PC	1765389.5949	918826.3924
8006	126+75.55	PT	1765830.9566	918565.2303
8007	130+00.00	POE	1766131.2507	918442.3750

ALIGNMENT NAME: RAMP 1

POINT	STATION	TYPE	NORTHING	EASTING
8100	200+00.00	POB	1764491.1127	918965.1125
8101	205+00.00	POE	1764550.2497	919461.6030

ALIGNMENT NAME: RAMP 2

POINT	STATION	TYPE	NORTHING	EASTING
8200	205+00.00	POB	1764495.0875	919500.2268
8201	206+55.44	PC	1764599.4967	919615.3798
8202	208+29.49	PT	1764758.6328	919657.2236
8203	211+00.00	POE	1765015.4079	919572.1182

ALIGNMENT NAME: RAMP 3

POINT	STATION	TYPE	NORTHING	EASTING
8300	305+00.00	POB	1765563.2795	918702.4691
8301	305+34.78	PC	1765575.7663	918734.9333
8302	308+45.99	PT	1765663.3801	919033.1906
8303	311+00.00	POE	1765714.9005	919281.9245

ALIGNMENT NAME: RAMP 4

POINT	STATION	TYPE	NORTHING	EASTING
8400	292+00.00	POB	1764504.8687	918258.1362
8401	292+78.00	PC	1764555.6181	918317.3750
8402	299+78.58	PT	1765192.7382	918480.7802
8403	300+74.62	PC	1765282.6117	918446.9204
8404	302+94.75	PT	1765470.1231	918519.5823
8405	305+00.00	POE	1765563.2795	918702.4691

ALIGNMENT NAME: I-30

POINT	STATION	TYPE	NORTHING	EASTING
8500	2605+00.00	POB	1764654.4603	918522.6696
8501	2620+00.00	POE	1765630.3511	919661.8084

ALIGNMENT NAME: DETOUR RAMP 4

POINT	STATION	TYPE	NORTHING	EASTING
8600	10+00.00	POB	1765404.2231	918453.6734
8601	11+59.93	PC	1765546.7245	918526.2832
8602	12+43.45	PT	1765613.0644	918576.3147
8603	13+30.02	POE	1765672.0564	918639.6744

ALIGNMENT NAME: DRIVE 125+87

POINT	STATION	TYPE	NORTHING	EASTING
8700	8+50.00	POB	1765640.6215	918511.6948
8701	9+16.60	PC	1765703.0758	918534.8363
8702	9+55.47	PT	1765730.9713	918560.4891
8703	10+00.00	POE	1765749.8795	918600.8023

DLTackett 9/2/2022 4:26:10 PM
WORKSPACE: AHTD
L:\2017\701634 - 070513 I-30 Str-Apprs Hwy 5\Drawings\r070513_SC_01.dgn
REVISED DATE:

DATE REVISED	DATE FILMED	DATE REVISED	DATE FILMED

FED.RD. DIST.NO.	STATE	FED.AID PROJ.NO.	SHEET NO.	TOTAL SHEETS
6	ARK.			
JOB NO.		070513	44	109

2 SURVEY CONTROL DETAILS

STATE OF ARKANSAS
LICENSED PROFESSIONAL ENGINEER
No.14994
DUSTIN L. TACKETT

DIGITALLY SIGNED 9/2/22

0 100 200

1" = 100'

ALL BEARINGS ARE GRID
BASED ON GPS
ALL DISTANCES ARE GROUND

C.L. HWY. 51

PI	=	105+94.63
Δ	=	58°39'20" RT.
D	=	7°30'00"
T	=	429.19'
L	=	782.07'
PC	=	101+65.44
PT	=	109+47.51
e	=	0.080'/' (MATCH EXISTING)
Ls	=	300'

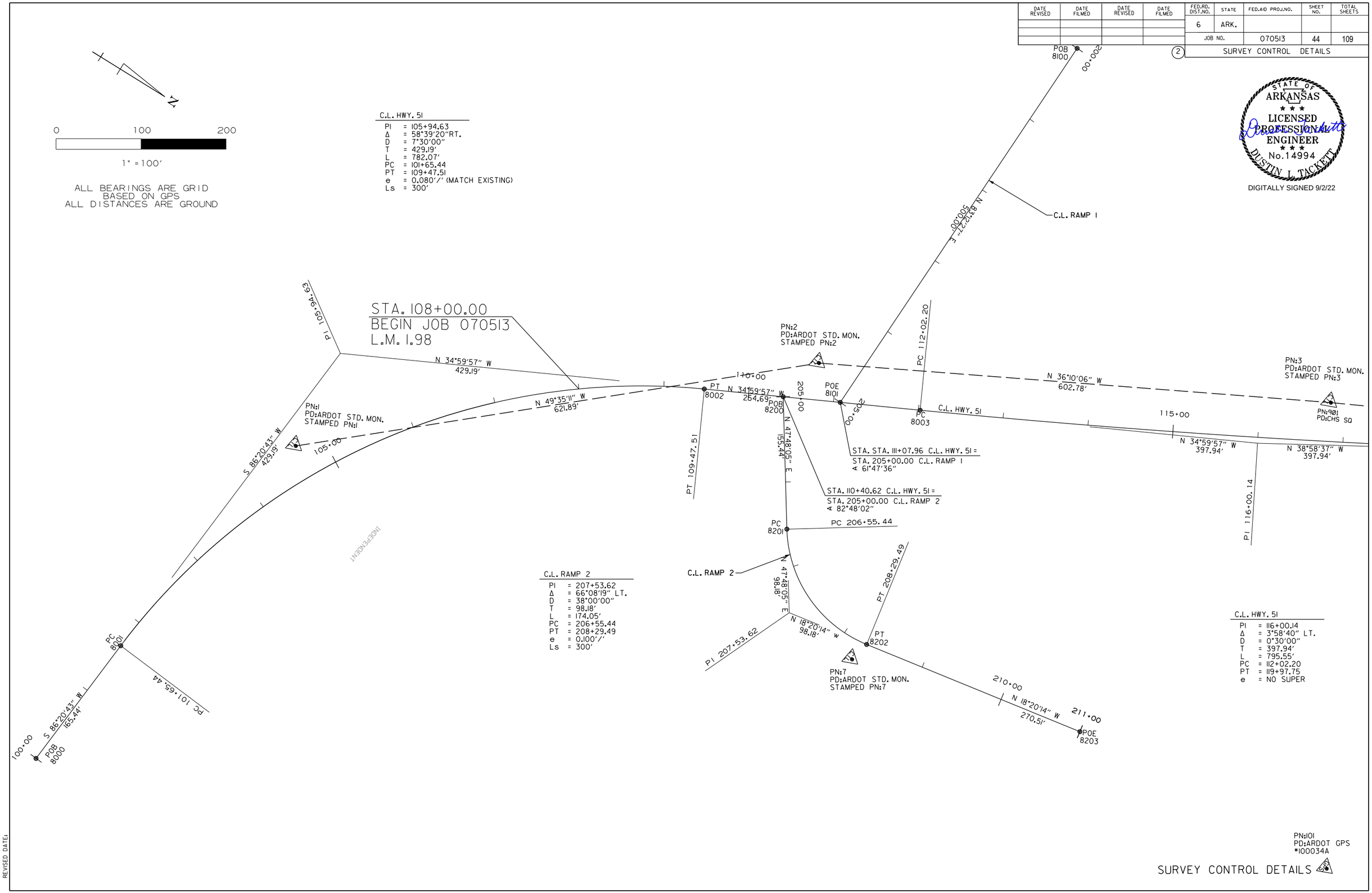

C.L. RAMP 2

PI	=	207+53.62
Δ	=	66°08'19" LT.
D	=	38°00'00"
T	=	98.18'
L	=	174.05'
PC	=	206+55.44
PT	=	208+29.49
e	=	0.100'/'
Ls	=	300'

C.L. HWY. 51

PI	=	116+00.14
Δ	=	3°58'40" LT.
D	=	0°30'00"
T	=	397.94'
L	=	795.55'
PC	=	112+02.20
PT	=	119+97.75
e	=	NO SUPER

PN:101
PD:ARDOT GPS
#100034A

SURVEY CONTROL DETAILS

DLTackett 9/2/2022 4:26:14 PM
WORKSPACE: AHTD
L:\2017\1701634 - 070513 I-30 Str-Apprs Hwy 51\Drawings\r070513.SC.02.dgn
REVISED DATE:

DATE REVISED	DATE FILMED	DATE REVISED	DATE FILMED	FED.RD. DIST.NO.	STATE	FED.AID PROJ.NO.	SHEET NO.	TOTAL SHEETS
				6	ARK.			
				JOB NO.		070513	45	109

(2) SURVEY CONTROL DETAILS

0 100 200

1" = 100'

ALL BEARINGS ARE GRID
BASED ON GPS
ALL DISTANCES ARE GROUND

N

STATE OF ARKANSAS
LICENSED PROFESSIONAL ENGINEER
No.14994
DUSTIN L. TACKETT

DIGITALLY SIGNED 9/2/22

POE 8500

C.L. MEDIAN I-30

2610+00

MATCHLINE "A"

PT 299+78.58

PN:9
PD:ARDOT STD. MON.
STAMPED PN:9

PT 8402

N 20°38'38" W
96.04'

PC 8403

N 20°38'38" W
134.93'

PI 302+09.55

C.L. RAMP 4

PI = 302+09.55
Δ = 83°39'04" RT.
D = 38°00'00"
T = 134.93'
L = 220.13'
PC = 300+74.62
PT = 302+94.75
e = 0.100'/'
Ls = 300'

PC 300+74.62

POB 8600

N 63°00'26" E
134.93'

N 27°00'02" E
159.95'

C.L. RAMP 4

PT 302+94.75

PT 8404

C.L. DETOUR RAMP 4

C.L. DETOUR RAMP 4

PI = 12+02.12
Δ = 20°02'38" RT.
D = 24°00'00"
T = 42.19'
L = 83.52'
PC = 11+59.93
PT = 12+43.45
e = 0.030'/'
Ls = 300'

C.L. HWY. 51

PI = 116+00.14
Δ = 3°58'40" LT.
D = 0°30'00"
T = 397.94'
L = 795.55'
PC = 112+02.20
PT = 119+97.75
e = NO SUPER

PN:3
PD:ARDOT STD. MON.
STAMPED PN:3

PN:901
PD:CHS SQ

PT 119+97.75

120+00

N 34°56'16" W
651.20'

N 38°58'37" W
397.94'

C.L. HWY. 51

PT 8004

N 38°58'37" W
163.13'

PC 8005

PN:4
PD:ARDOT STD. MON.
STAMPED PN:4

N 38°58'37" W
259.18'

POB/POE 8300

N 63°00'26" E
205.32'

PC 11+59.93

N 27°00'02" E
42.19'

PC 8601

PI 12+02.12

N 57°02'40" E
42.19'

POB 8700

N 20°19'53" E
86.60'

PT 12+43.45

PT 8602

C.L. DRIVE 125+87

PC 9+16.60

N 20°19'53" E
20.48'

PC 8701

PI 9+37.08

N 47°02'40" E
86.57'

N 64°52'19" E
20.48'

PT 9+55.47

C.L. DRIVE 125+87

PI = 9+37.08
Δ = 44°32'26" RT.
D = 114°35'30"
T = 20.48'
L = 38.87'
PC = 9+16.60
PT = 9+55.47

STA. 123+74.37 C.L. HWY. 51 =
STA. 305+00.00 C.L. RAMP 4
∡ 84°57'16"

PI 124+20.06

305+00

N 22°15'01" W
259.18'

125+00

POE 8603

N 64°52'19" E
44.53'

POE 8703

PT 8006

N 22°49'09" W
178.79'

N 122°15'01" W
324.45'

130+00

POE 8007

PN:5
PD:ARDOT STD. MON.
STAMPED PN:5

PC 305+34.78

PC 8301

N 68°17'42" E
54.18'

PC 121+60.88

STA. 118+00.00 C.L. HWY. 51 =
STA. 261+97.09 C.L. MEDIAN I-30
∡ 87°24'06"

N 49°24'49" E
1500.00'

2615+00

C.L. RAMP 3

PI = 306+90.73
Δ = 9°20'10" RT.
D = 3°00'00"
T = 155.95'
L = 311.21'
PC = 305+34.78
PT = 308+45.99
e = NO SUPER

N 68°17'42" E
155.95'

PI 306+90.73

N 78°17'52" E
155.95'

C.L. RAMP 3

PT 308+45.99

PT 8302

N 78°17'52" E
254.01'

POE 311+00.00

POE 8303

310+00

STA. 123+74.37 C.L. HWY. 51 =
STA. 305+00.00 C.L. RAMP 3
∡ 79°00'00"

PT 126+75.55

STA. 125+87.00 C.L. HWY. 51 =
STA. 10+00.00 C.L. DRIVE 125+87
90°00'00"

STA. 125+00.00 C.L. HWY. 15 =
STA. 13+30.02 C.L. DETOUR RAMP 4
∡ 75°00'00"

C.L. HWY. 51

PI = 124+20.06
Δ = 16°43'36" RT.
D = 3°15'00"
T = 259.18'
L = 514.67'
PC = 121+60.88
PT = 126+75.55
e = 0.062'/'
Ls = 250'

POB 8400

N 49°24'49" E
78.00'

292+00

PC 8401

PC 292+78.00

C.L. RAMP 4

C.L. RAMP 4

PI = 296+79.62
Δ = 70°03'27" LT.
D = 10°00'00"
T = 401.62'
L = 700.57'
PC = 292+78.00
PT = 299+78.58
e = 0.100'/'
Ls = 300'

N 49°24'49" E
401.62'

297+00

PI 296+79.62

N 20°38'38" W
401.62'

MATCHLINE "A"

STA. 128+50
END JOB 070513

PN:101
PD:ARDOT GPS
#100034A

POB 8501

SURVEY CONTROL DETAILS

DLTackett 9/2/2022 4:26:15 PM
WORKSPACE: AHTD
L:\2017\1701634 - 070513 I-30 Str-Apprs Hwy 51\Drawings\r070513.SC.03.dgn
REVISED DATE:

DATE REVISED	DATE FILMED	DATE REVISED	DATE FILMED

FED. RD. DIST. NO.	STATE	FED. AID PROJ. NO.	SHEET NO.	TOTAL SHEETS
6	ARK.			
JOB NO.		070513	46	109

PLAN & PROFILE - HIGHWAY 51

2

STATE OF ARKANSAS ★★★ LICENSED PROFESSIONAL ENGINEER ★★★ No.14994 DUSTIN L. TACKETT

DIGITALLY SIGNED 9/2/22

C.L. HWY. 51

PI	= 105+94.63
Δ	= 58°39'20"RT.
D	= 7°30'00"
T	= 429.19'
L	= 782.07'
PC	= 101+65.44
PT	= 109+47.51
e	= 0.080'/' (MATCH EXISTING)
Ls	= 300'

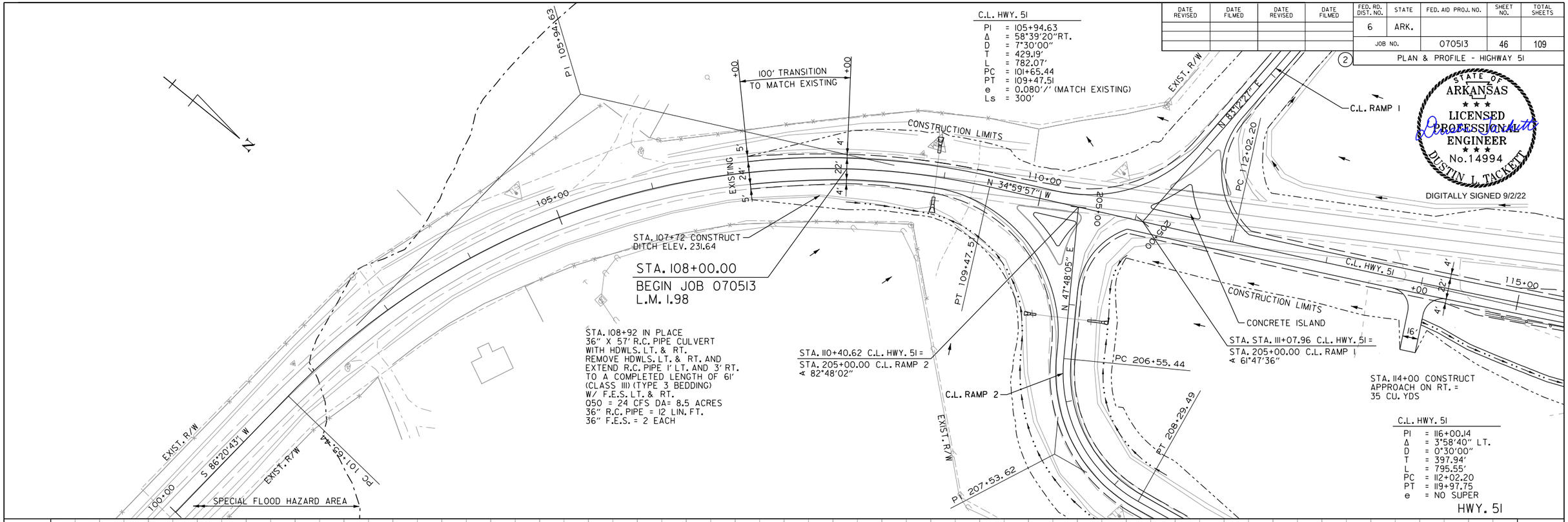

C.L. HWY. 51

PI	= 116+00.14
Δ	= 3°58'40" LT.
D	= 0°30'00"
T	= 397.94'
L	= 795.55'
PC	= 112+02.20
PT	= 119+97.75
e	= NO SUPER

HWY. 51

REFER TO SURVEY CONTROL DETAIL SHEETS
FOR HORIZONTAL AND VERTICAL CONTROL POINTS

STA. 108+00.00 BEGIN SUPERELEVATION (0.080'/') (MATCH EXISTING)
STA. 108+27.51 MAX. SUPERELEVATION (0.080'/')
STA. 111+27.51 END SUPERELEVATION

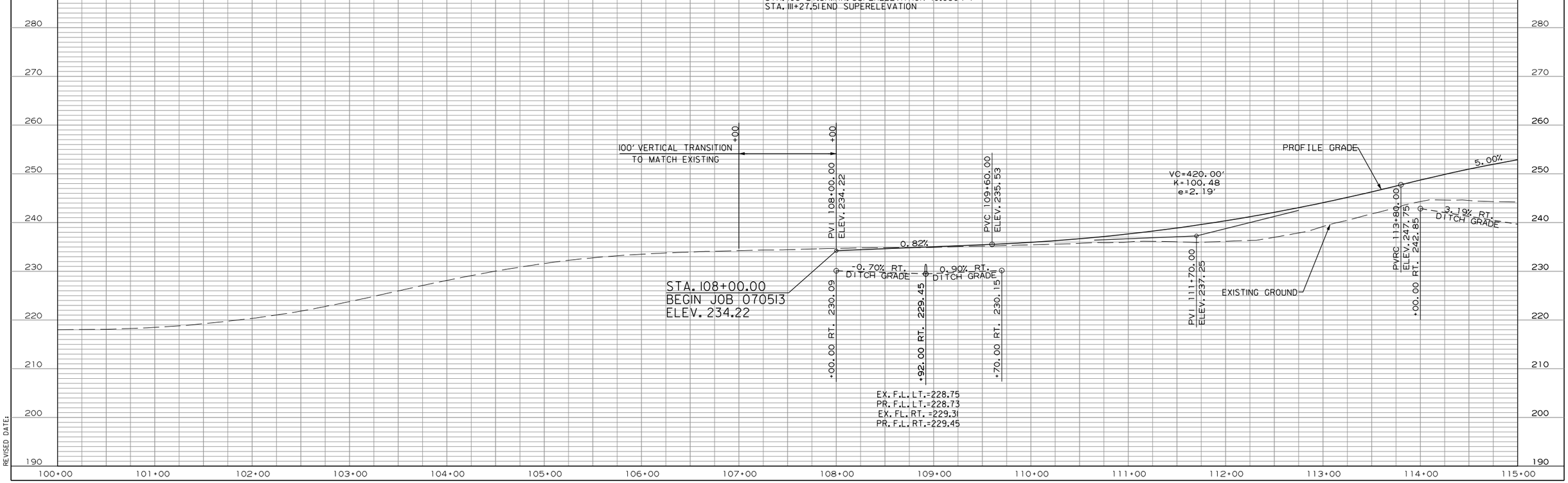

DLTackett 9/2/2022 4:26:16 PM
WORKSPACE: AHTD
L:\2017\701634 - 070513 I-30 Str-Apprs Hwy 51\Drawings\r070513_PP_01.dgn
REVISED DATE:

DATE REVISED	DATE FILMED	DATE REVISED	DATE FILMED	FED. RD. DIST. NO.	STATE	FED. AID PROJ. NO.	SHEET NO.	TOTAL SHEETS
				6	ARK.			
				JOB NO.		070513	47	109

(2) PLAN & PROFILE - HIGHWAY 51

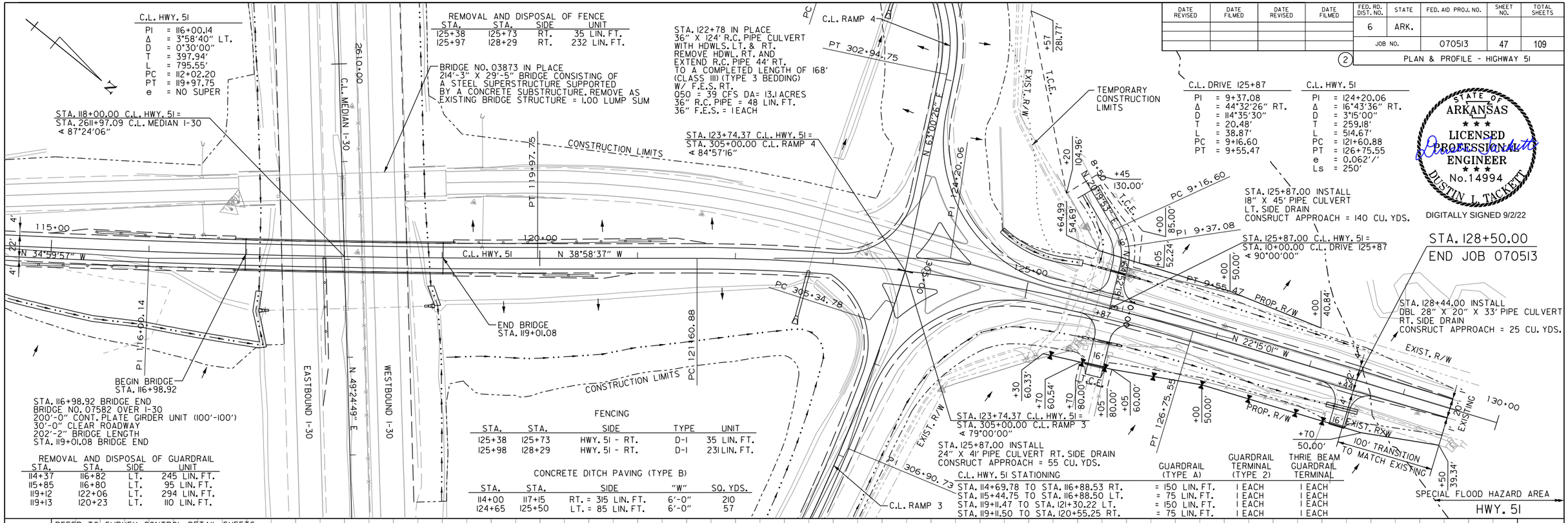

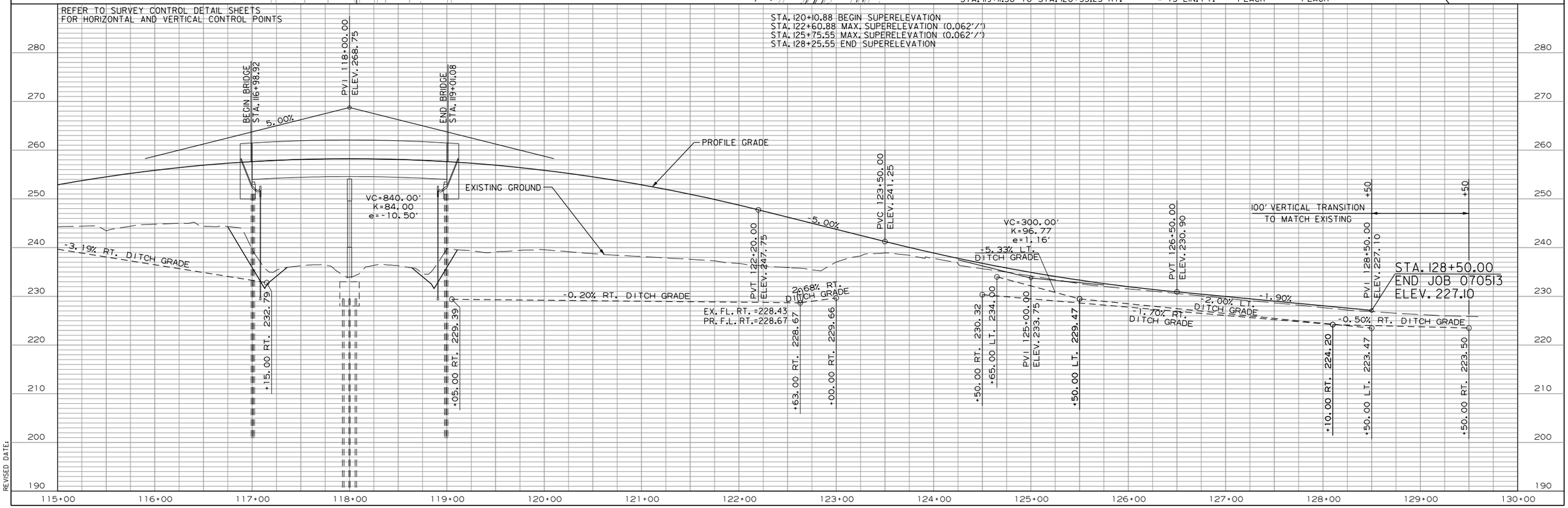

DLTackett 9/2/2022 4:26:16 PM
WORKSPACE: AHTD
L:\20\T\170\7634 - 070513 I-30 Str-Apprs Hwy 51\Drawings\r070513_PP_02.dgn
REVISED DATE:

DATE REVISED	DATE FILMED	DATE REVISED	DATE FILMED	FED. RD. DIST. NO.	STATE	FED. AID PROJ. NO.	SHEET NO.	TOTAL SHEETS
				6	ARK.			
				JOB NO.		070513	48	109

(2) PLAN & PROFILE - RAMPS 1 & 2

STATE OF ARKANSAS ★★★ LICENSED PROFESSIONAL ENGINEER ★★★ No.14994 DUSTIN L. TACKETT

DIGITALLY SIGNED 9/2/22

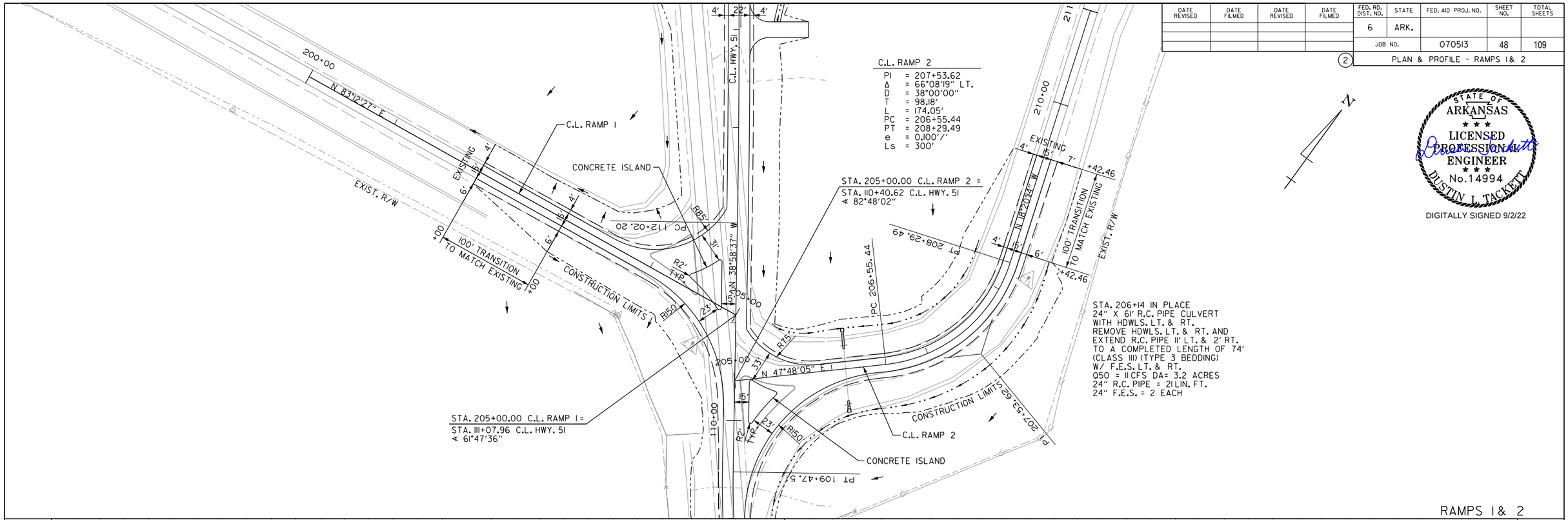

RAMPS 1 & 2

REFER TO SURVEY CONTROL DETAIL SHEETS
FOR HORIZONTAL AND VERTICAL CONTROL POINTS

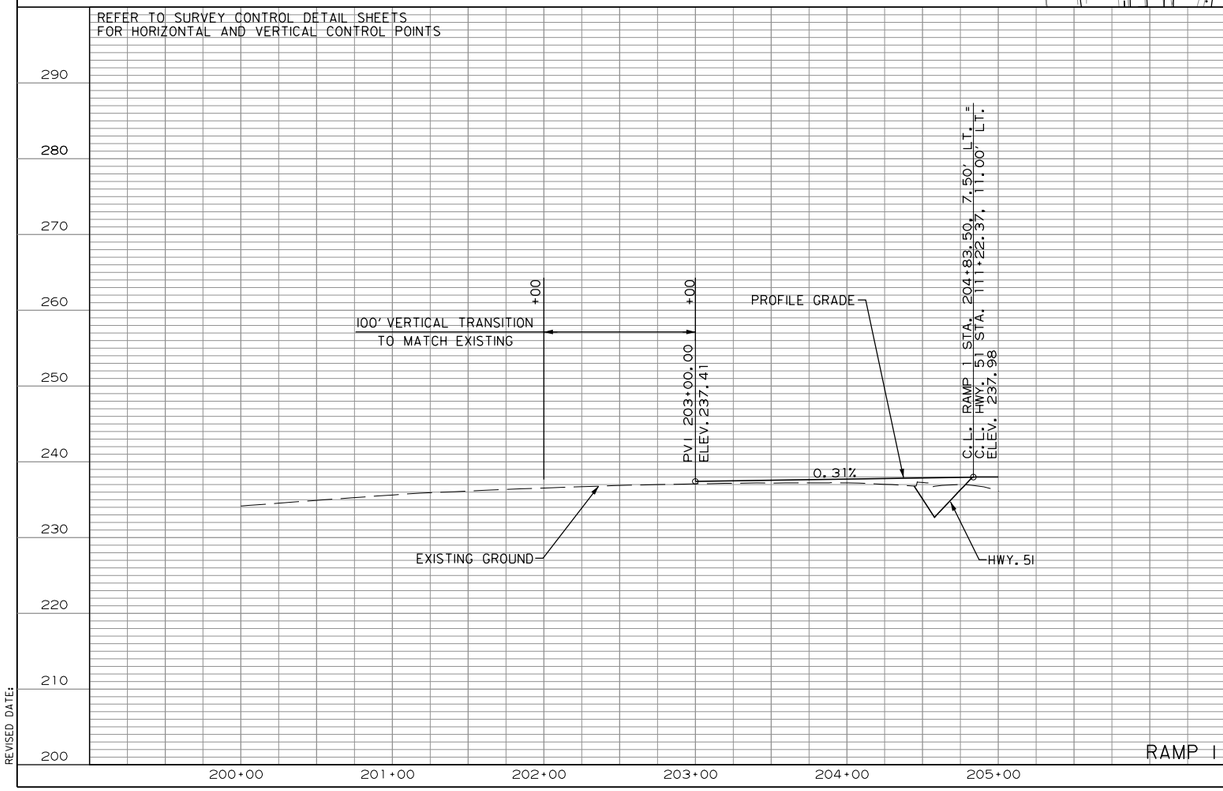

RAMP 1

STA. 205+42.46 BEGIN SUPERELEVATION
STA. 207+42.46 MAX. SUPERELEVATION (0.060'/')
STA. 208+42.46 END SUPERELEVATION (0.020'/') R.C. (MATCH EXISTING)

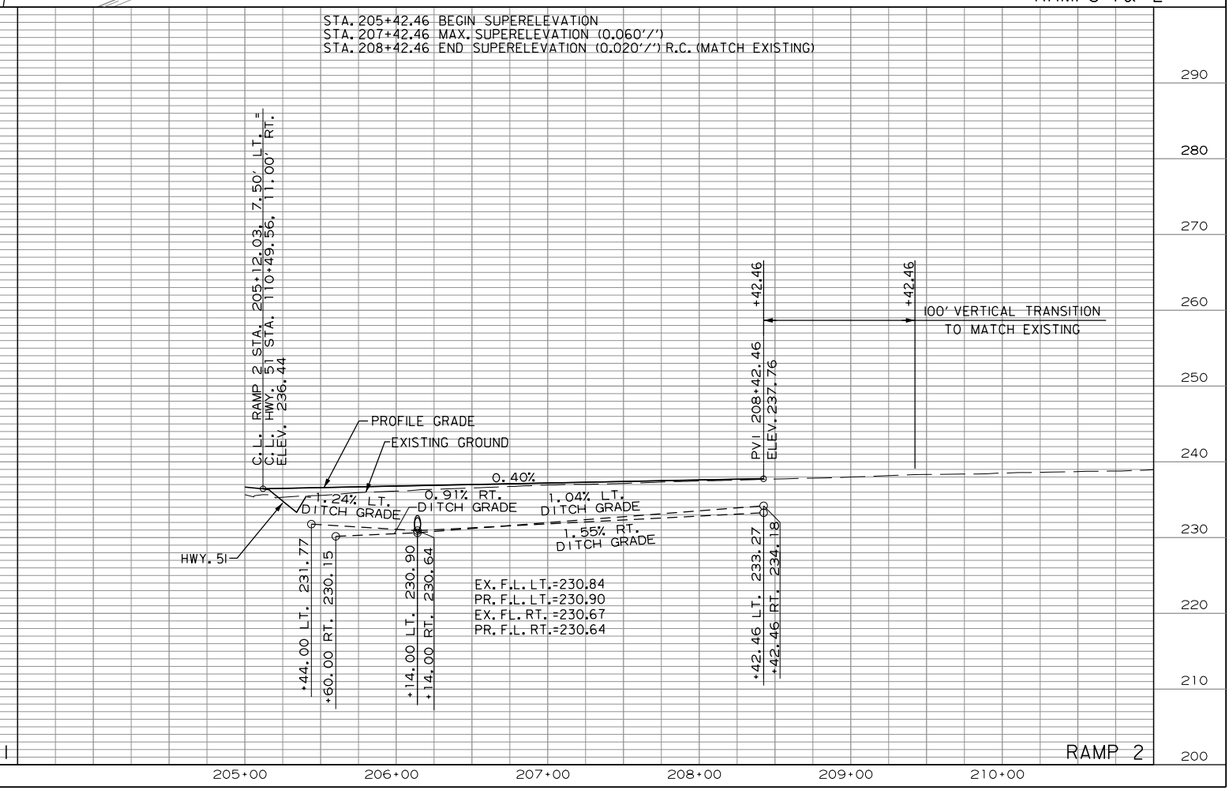

RAMP 2

DLTackett 9/2/2022 4:26:17 PM
WORKSPACE: AHTD
L:\2017\170176\34 - 070513 I-30 Str-Apprs Hwy 51\Drawings\r070513_PP_03.dgn
REVISED DATE:

DATE REVISED	DATE FILMED	DATE REVISED	DATE FILMED	FED. RD. DIST. NO.	STATE	FED. AID PROJ. NO.	SHEET NO.	TOTAL SHEETS
				6	ARK.			
				JOB NO.		070513	49	109

(2) PLAN & PROFILE - RAMPS 3 & 4

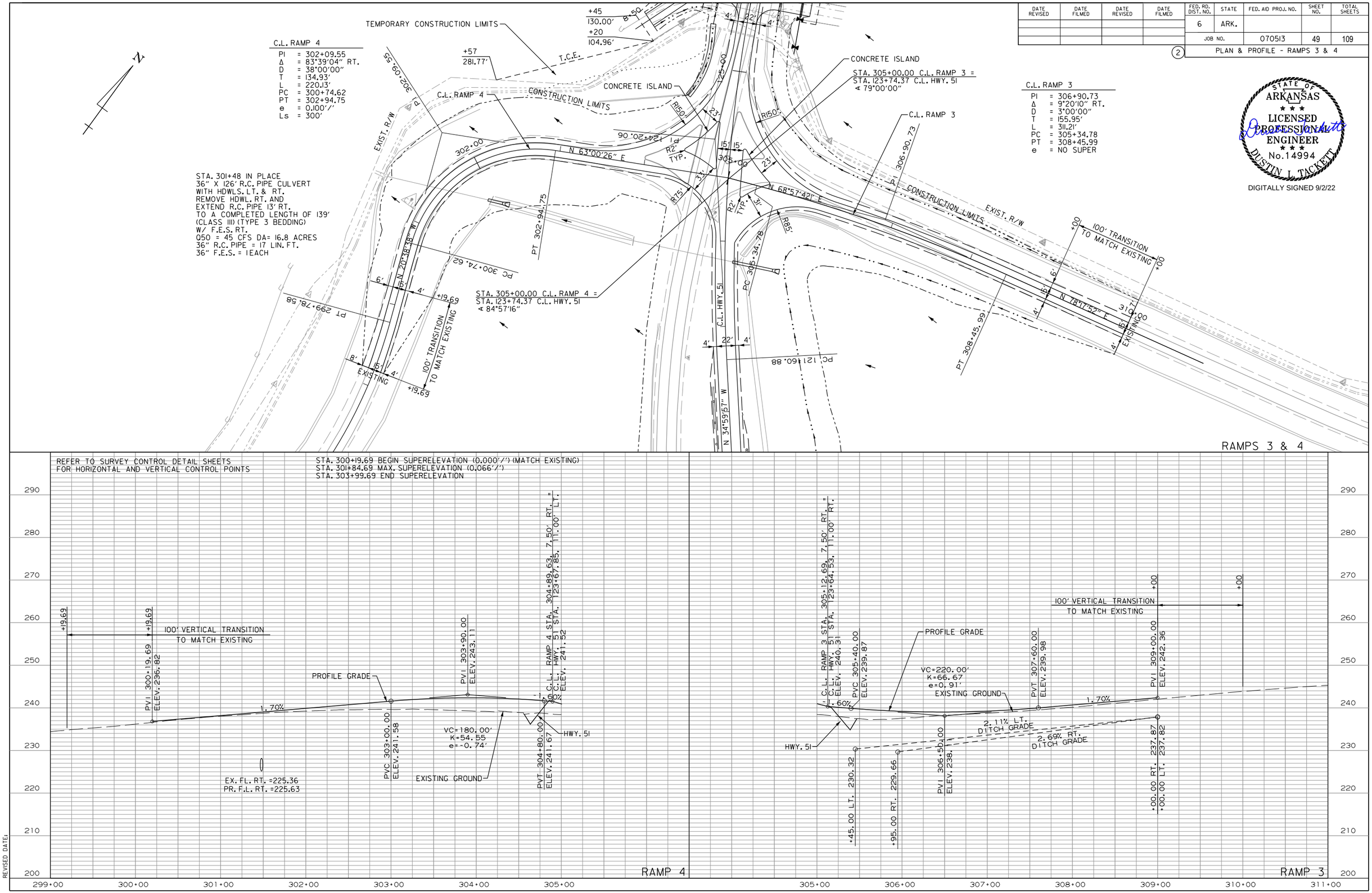

DLTackett 9/2/2022 4:26:18 PM
WORKSPACE: AHTD
L:\2017\701634 - 070513 I-30 Str-Apprs Hwy 51\Drawings\r070513_PP_04.dgn
REVISED DATE:

DATE REVISED	DATE FILMED	DATE REVISED	DATE FILMED	FED. RD. DIST. NO.	STATE	FED. AID PROJ. NO.	SHEET NO.	TOTAL SHEETS
				6	ARK.			
				JOB NO.		070513	50	109

(2) PLAN & PROFILE - I-30

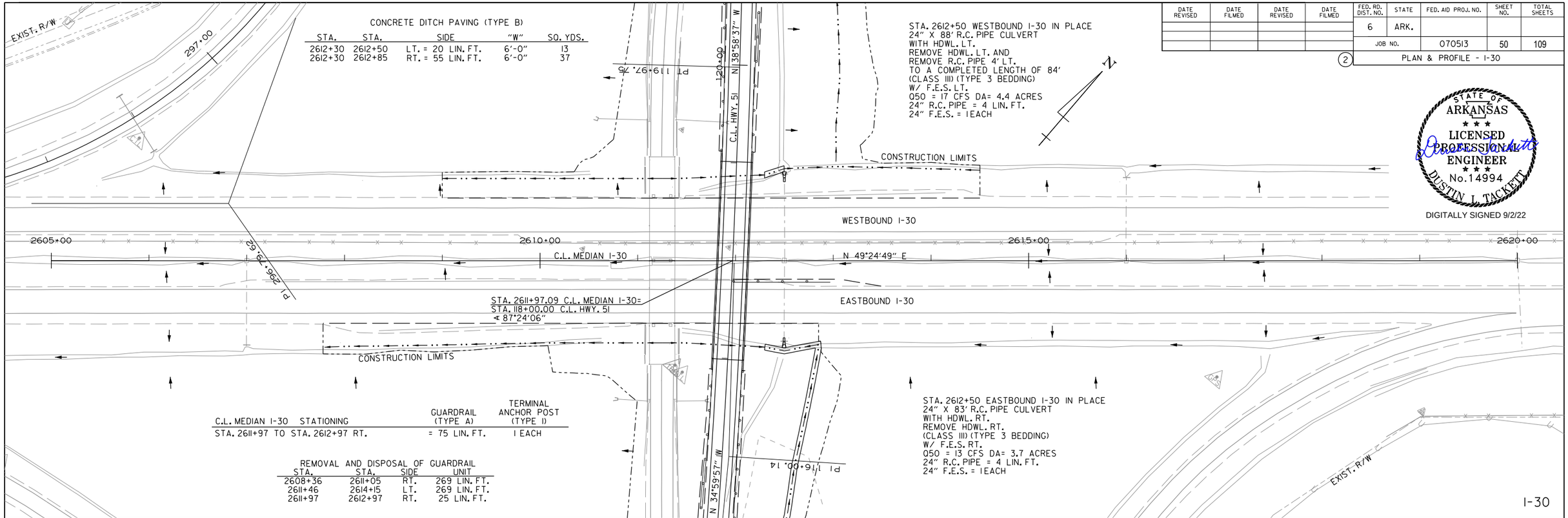

STATE OF ARKANSAS
LICENSED PROFESSIONAL ENGINEER
No.14994
DUSTIN L. TACKETT
DIGITALLY SIGNED 9/2/22

REFER TO SURVEY CONTROL DETAIL SHEETS
FOR HORIZONTAL AND VERTICAL CONTROL POINTS

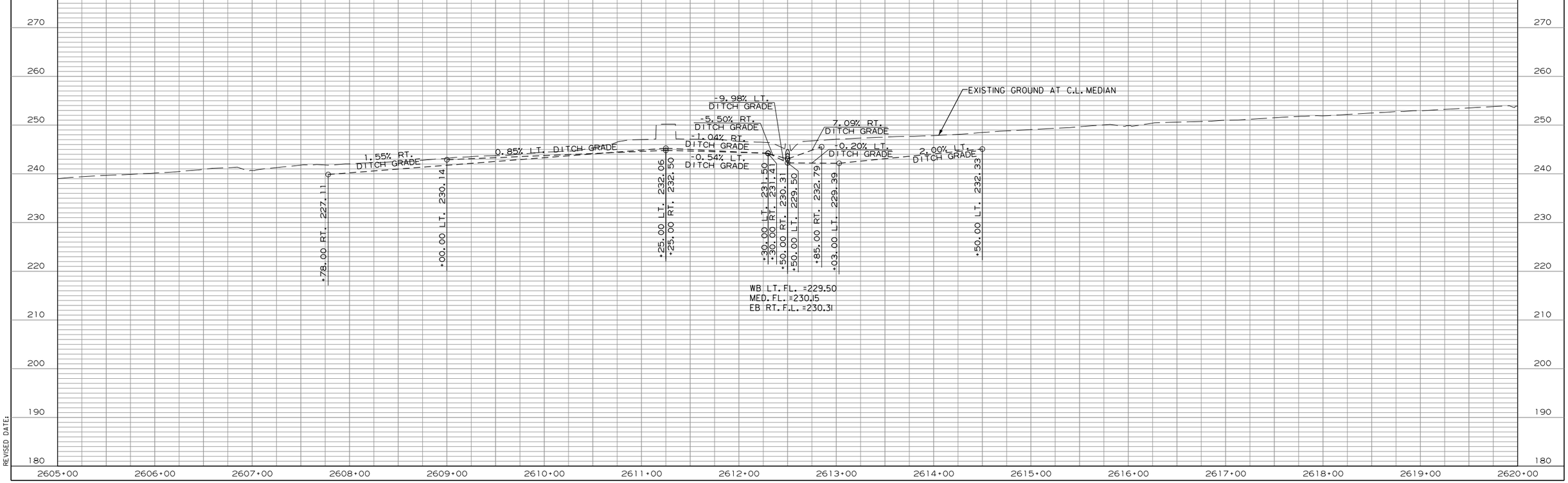

DLTackett 9/2/2022 4:26:18 PM
WORKSPACE: AHTD
L:\2017\701634 - 070513 I-30 Str-Apprs Hwy 51\Drawings\r070513_PP_05.dgn
REVISED DATE:

DATE REVISED	DATE FILMED	DATE REVISED	DATE FILMED	FED. RD. DIST. NO.	STATE	FED. AID PROJ. NO.	SHEET NO.	TOTAL SHEETS
				6	ARK.			
				JOB NO.		070513	51	109

(2) PLAN & PROFILE - DETOUR RAMP 4

STATE OF ARKANSAS ★★★ LICENSED PROFESSIONAL ENGINEER ★★★ No.14994 DUSTIN L. TACKETT

DIGITALLY SIGNED 9/2/22

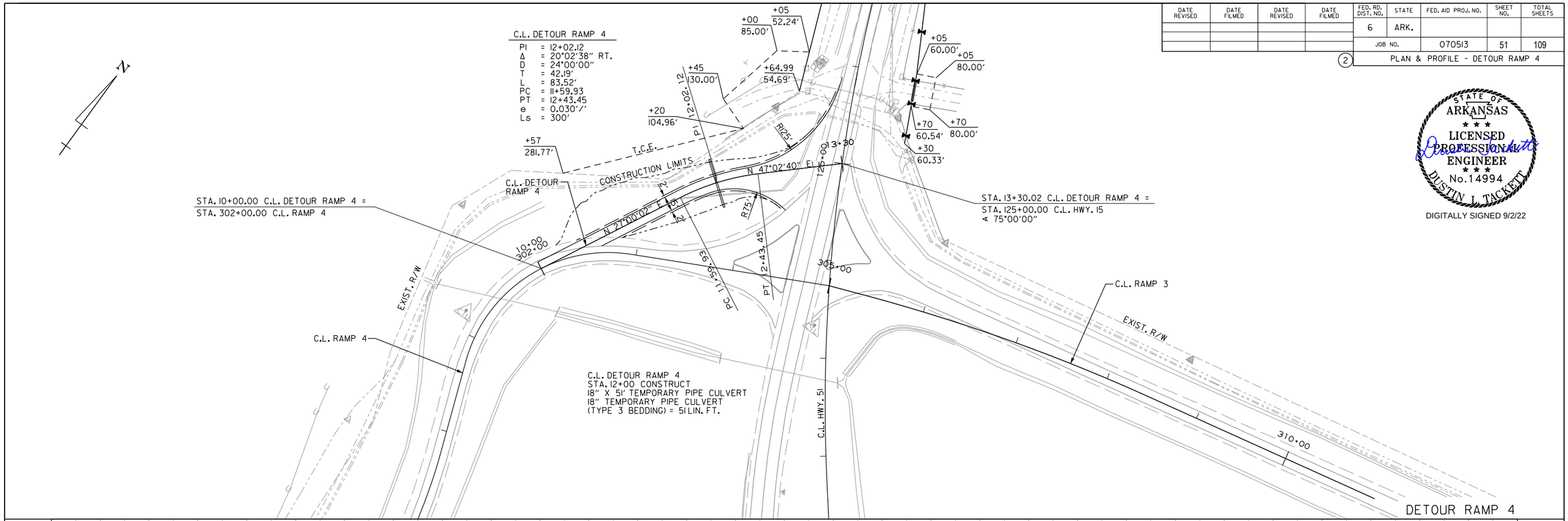

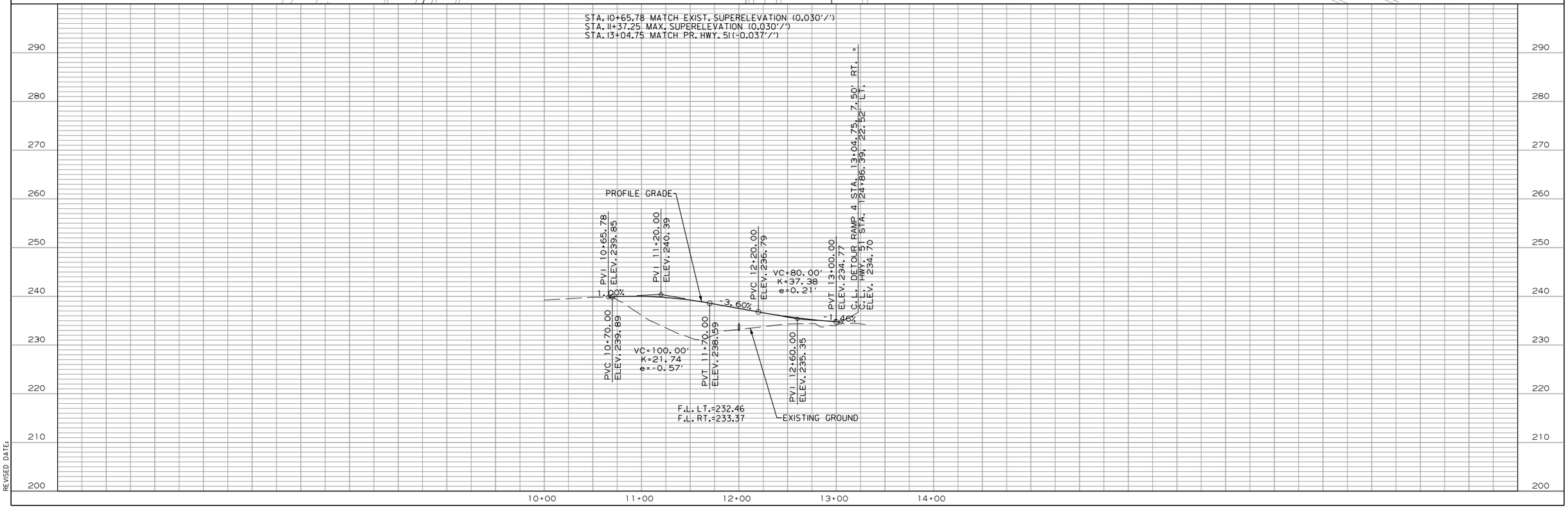

DL Tackett 9/2/2022 4:26:19 PM
WORKSPACE: AHTD
L:\20\170\7634 - 070513 I-30 Str-Apprs Hwy 51\Drawings\r070513_PP_MOT_01.dgn
REVISED DATE:

DATE REVISED	DATE FILMED	DATE REVISED	DATE FILMED	FED.RD. DIST.NO.	STATE	FED.AID PROJ.NO.	SHEET NO.	TOTAL SHEETS
				6	ARK.			
				JOB NO.		070513	52	109
				(2)	DRIVEWAY PROFILES			

STATE OF ARKANSAS
LICENSED PROFESSIONAL ENGINEER
No.14994
DUSTIN L. TACKETT

DIGITALLY SIGNED 9/2/22

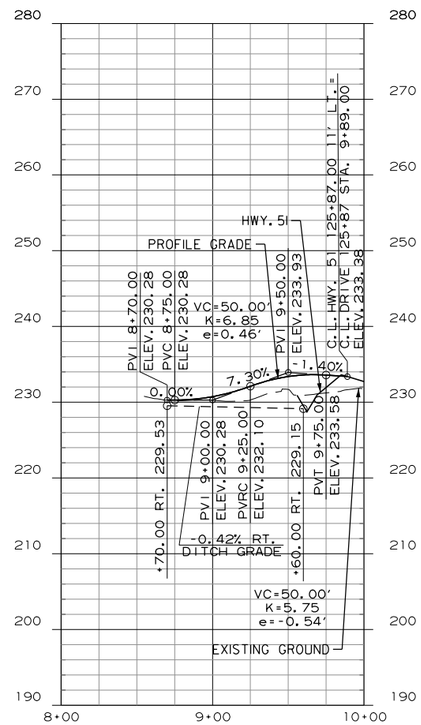

DRIVE 125+87

DLTackett 9/2/2022 4:26:20 PM
WORKSPACE: AHTD
L:\20\T\T01T634 - 070513 I-30 Str-Apprs Hwy 51\Drawings\r070513_PP_DRIVEWAYS.dgn
REVISED DATE:

DATE REVISED	DATE FILMED	DATE REVISED	DATE FILMED	FED. ROAD DIST. NO.	STATE	FED. AID PROJ. NO.	SHEET NO.	TOTAL SHEETS
				6	ARK.			
				JOB NO.		070513	53	109
				07582		LAYOUT		65152

NOTES:
Use Type F Approach Gutters at each end of bridge. See Std. Dwg. No. 55030F.

Use Type Special Approach Slabs at each end of bridge. See Dwg. No. 65174A for details.

NOTES:
For "GENERAL NOTES", see Dwg. No. 65154.

For "BORING LEGEND", & "N-VALUES", see Dwg. No. 65155.

For details of proposed grading and excavation of existing embankment, See "LOCATION SKETCH" on Dwg. No. 65153.

CL Construction is on a 0°30'00" curve left. CL Girders and the longitudinal lines of the bridge, approach slabs and approach gutters shall be constructed on curves concentric with CL Construction. CL Joints at End Bent Nos. 1 & 3 and CL Intermediate Bent No. 2 shall be constructed radial to CL Construction.

(1) Angle measured between CL Median I-30 and local tangent to CL Construction Hwy. 51 at Sta. 118+00.00.

(2) Vertical profile has been set to accommodate 12'-0" future widening of existing I-30 as shown. Cross-slope of future lane is assumed to slope 2% upward towards median. Minimum vertical clearance to edge of future lane is calculated as 16.56'.

(3) Ashlar Stone Pattern, See Special Provision "ARCHITECTURAL FINISH".

(4) See Special Provision "SHORING".

(5) See Special Provision "TEMPORARY RETAINING WALLS".

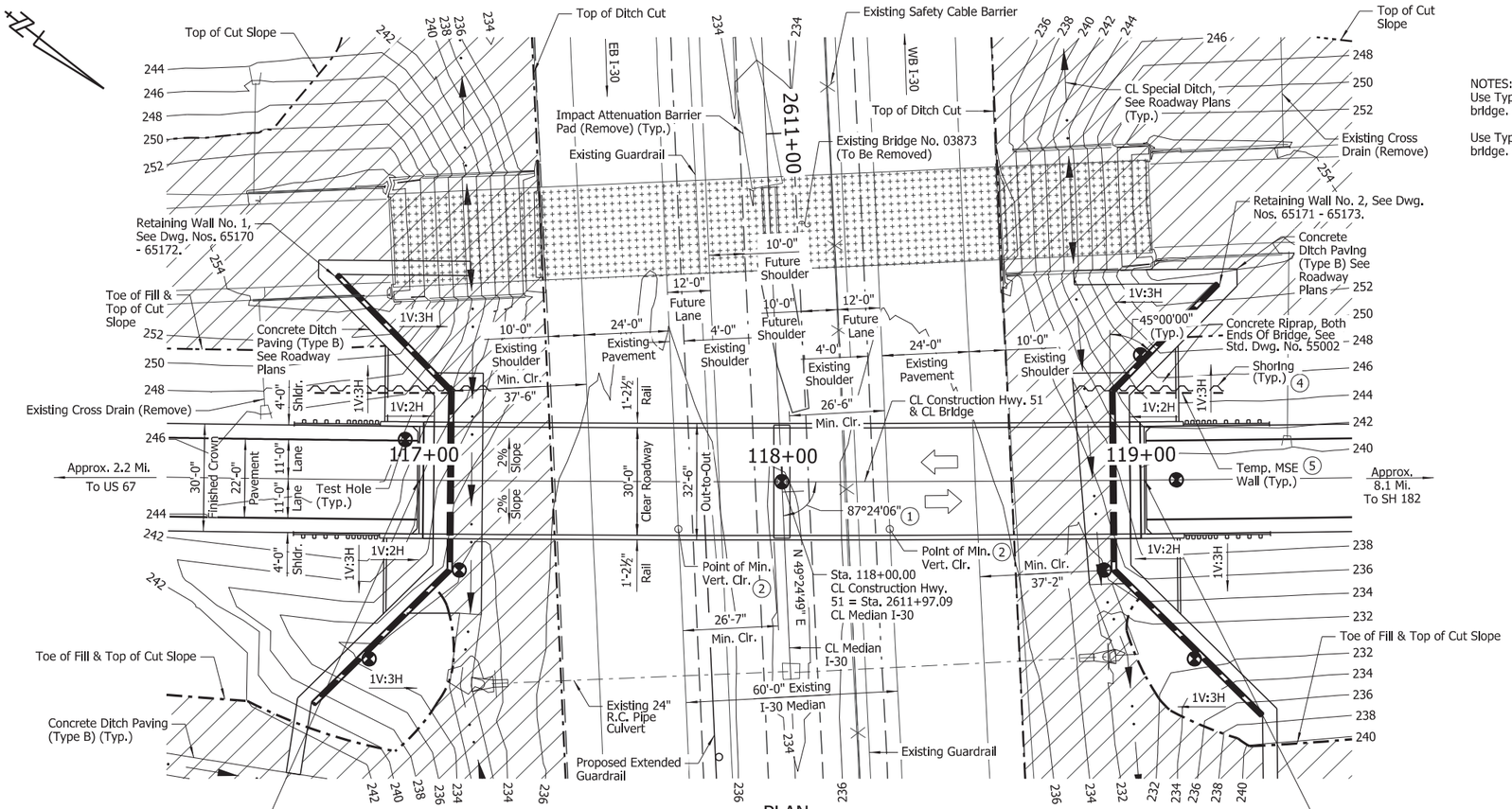

PLAN

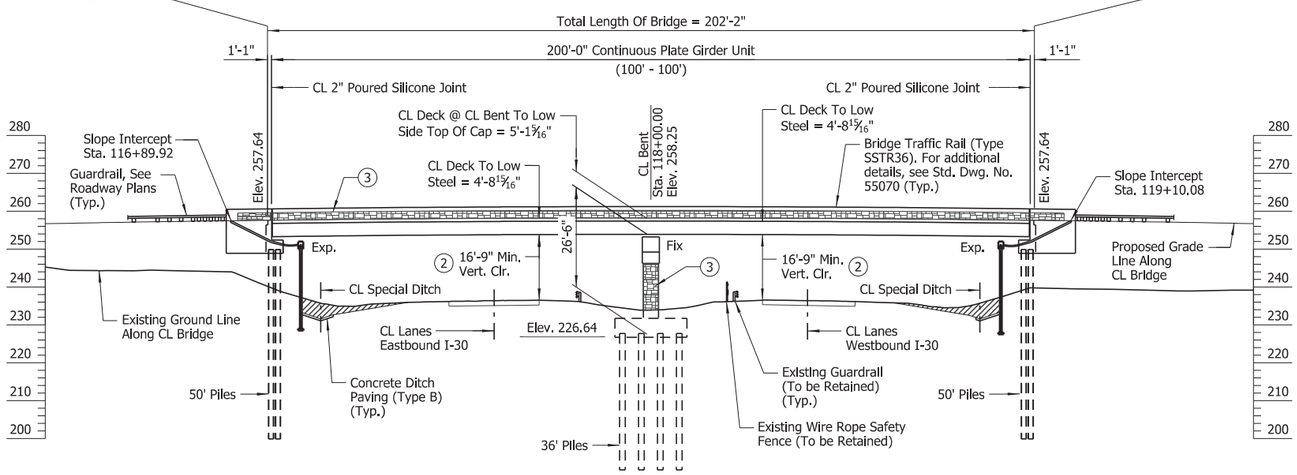

ELEVATION

FOR R/W DATA, SEE ROADWAY PLANS

NOTE:
Stations shown are along CL Construction. Elevations shown are theoretical working point elevations at CL Bridge. Any vertical dimension referenced to CL Deck is based on theoretical working point elevation at CL Bridge. See "ROUNDING DETAIL" on Std. Dwg. No. 55007 for additional information.

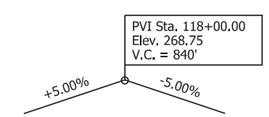

VERTICAL CURVE DATA
(Theoretical Grade Along CL Construction Hwy. 51)

HORIZONTAL CURVE DATA
CL Construction Hwy. 51

PI	= 116+00.14
Δ	= 3°58'40" Lt.
D	= 0°30'00"
T	= 397.94'
L	= 795.55'
PC	= 112+02.20
PT	= 119+97.75
e	= No Super
R	= 11,459.16

STATE OF ARKANSAS
LICENSED PROFESSIONAL ENGINEER
No.8017
JOHN H. RUDDELL

Digitally Signed 09/02/2022
BRIDGE ENGINEER

SHEET 1 OF 4
LAYOUT OF BRIDGE
HIGHWAY 51 OVER I-30
I-30 STR. & APPRS. (HWY. 51) (S)
CLARK COUNTY
ROUTE 51 SEC. 1
ARKANSAS STATE HIGHWAY COMMISSION
LITTLE ROCK, ARK.

DRAWN BY: HEW DATE: NOV. 2020 FILENAME: b070513_L1.dgn
CHECKED BY: RLW DATE: JAN. 2021 SCALE: 1" = 20'
DESIGNED BY: JME DATE: NOV. 2020
BRIDGE NO. 07582 DRAWING NO. 65152

JMEdwards 9/2/2022 11:30:06 AM
WORKSPACE: ARDOT Bridge (2019)
L:\2017\1701763\4 - 070513 I-30 Str-Apprs Hwy 51\Drawings\b070513_S101_LO.dgn
REVISED DATE:

DATE REVISED	DATE FILMED	DATE REVISED	DATE FILMED	FED. ROAD DIST. NO.	STATE	FED. AID PROJ. NO.	SHEET NO.	TOTAL SHEETS
				6	ARK.			
				JOB NO.		070513	54	109
				(1) 07582		LAYOUT		65153

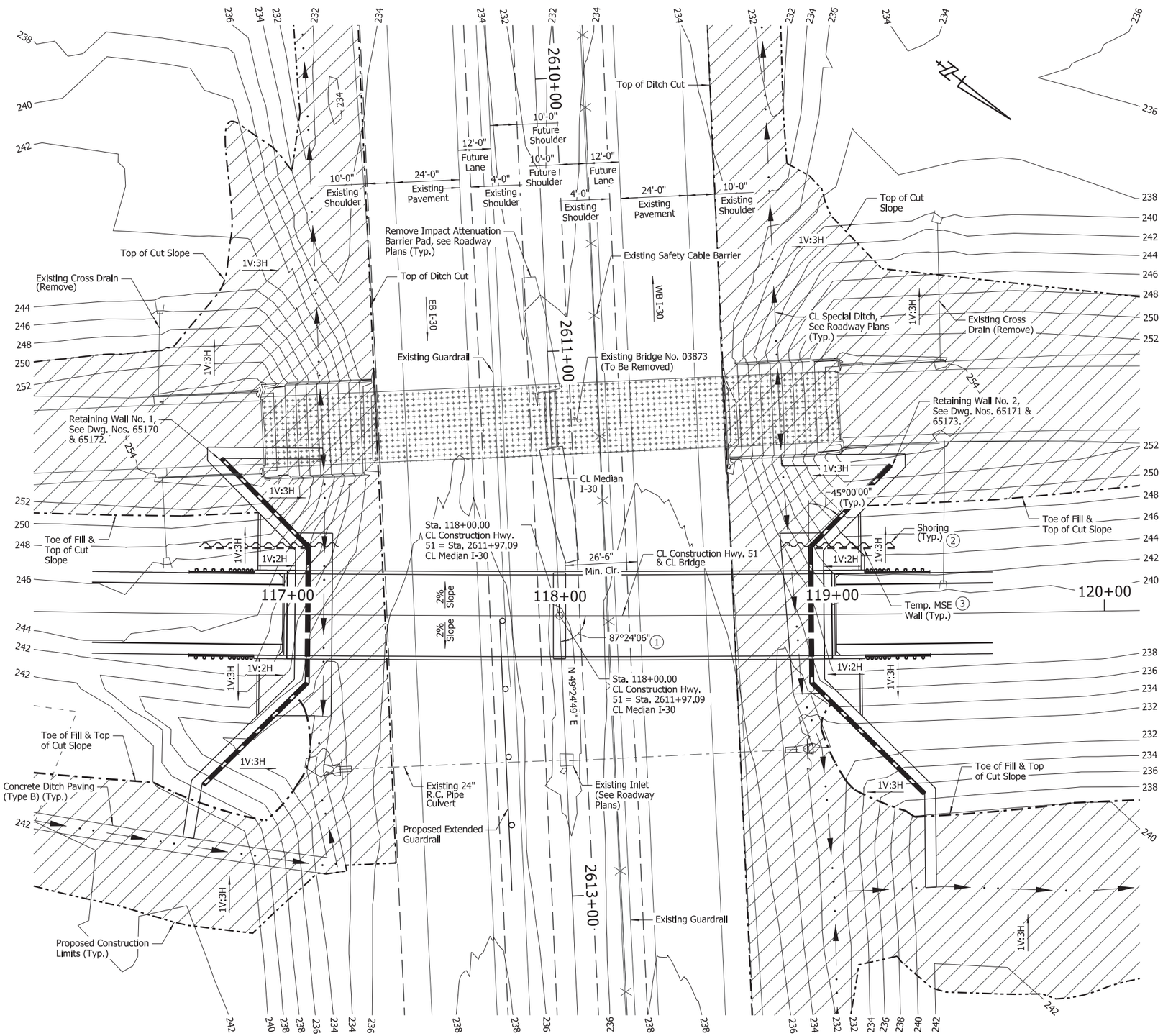

LOCATION SKETCH

NOTE:
For "GENERAL NOTES", see Dwg. No. 65154.

(1) Angle measured between CL Median I-30 and local tangent to CL Construction Hwy. 51 at Sta. 118+00.00.

(2) See Special Provision "SHORING".

(3) See Special Provision "TEMPORARY RETAINING WALLS".

STATE OF ARKANSAS
LICENSED PROFESSIONAL ENGINEER
No.8017
JOHN H. RUDDELL

Digitally Signed 09/02/2022

BRIDGE ENGINEER

SHEET 2 OF 4
LAYOUT OF BRIDGE
HIGHWAY 51 OVER I-30
I-30 STR. & APPRS. (HWY. 51) (S)
CLARK COUNTY

ROUTE 51 SEC. 1

ARKANSAS STATE HIGHWAY COMMISSION

LITTLE ROCK, ARK.

DRAWN BY:	HEW	DATE:	FEB. 2021	FILENAME:	b070513_L2.dgn
CHECKED BY:	RLW	DATE:	FEB. 2021	SCALE:	1" = 20'
DESIGNED BY:	JME	DATE:	FEB. 2021		

BRIDGE NO. 07582 DRAWING NO. 65153

JMEdwards 9/2/2022 11:30:07 AM
WORKSPACE: ARDOT Bridge (2019)
L:\2017\17017634 - 070513 I-30 Str~Apprs Hwy 51\Drawings\b070513_S102_LO.dgn
REVISED DATE:

DATE REVISED	DATE FILMED	DATE REVISED	DATE FILMED	FED. ROAD DIST. NO.	STATE	FED. AID PROJ. NO.	SHEET NO.	TOTAL SHEETS
				6	ARK.			
				JOB NO.		070513	55	109
				1	07582	LAYOUT		65154

GENERAL NOTES

BENCHMARK: Vertical Control Data are shown on the Survey Control Data Sheets.

CONSTRUCTION SPECIFICATIONS: Arkansas State Highway and Transportation Department Standard Specifications for Highway Construction (2014 Edition) with applicable Supplemental Specifications and Special Provisions. Unless otherwise noted in the plans, Section and Subsection numbers refer to the Standard Construction Specifications.

DESIGN SPECIFICATIONS: AASHTO LRFD Bridge Design Specifications (2017, 8th Edition)

LIVE LOADING: HL-93

SEISMIC ZONE: 1 S_{D1} = 0.10g Site Class = C

SEISMIC OPERATIONAL CLASSIFICATION: Essential

MATERIALS AND STRENGTHS:

Class S(AE) Concrete (Superstructure)	f'c = 4,000 psi
Class S Concrete (Substructure)	f'c = 3,500 psi
Reinforcing Steel (AASHTO M 31 or M 322, Type A)	fy = 60,000 psi
Structural Steel (ASTM A709, Gr. 50)	Fy = 50,000 psi
Structural Steel (ASTM A709, Gr. 36)	Fy = 36,000 psi

BORING LOGS: Boring Logs may be obtained from the Construction Contract Development Section of the Program Management Division.

STEEL PILING: Piling for Bents 1-3 shall be HP14x73 (Grade 50) and shall be driven to a minimum ultimate bearing capacity of 175 tons per pile. All piling shall be driven with an approved air, steam, or diesel hammer. Piling in end bents shall be driven after embankment to bottom of cap is in place. Piling in Bents 1 and 3 shall have a minimum penetration of 10' below bottom of retaining wall leveling pad. Piling in Bent 2 shall have a mimimum penetration of 20' below bottom of footing. Lengths of piling shown are assumed for estimating quantities and for use in determining payment for cut-off and build-up in accordance with Section 805. Actual lengths are to be determined in the field. The Contractor shall use approved steel H-pile driving points on all piles. Test piles are not required but may be driven for the Contractor's information in accordance with Subsection 805.08(g). No piles will be paid for as test piles.

PILE CASINGS: Pile casings are required for piling within MSE walls at End Bent Nos. 1 & 3. See "FOUNDATION PLAN" on Dwg. No. 65165 for the location of proposed casing. Casings shall be installed prior to or during embankment construction and shall extend from top of leveling pad to bottom of cap. Pile casing material shall be of sufficient strength to retain its original form free from harmful distortions after compaction of the fill material surrounding it. The minimum inside diameter of the casings shall be 24". Piles shall be driven through the open casings after the embankment to the bottom of the cap is in place. After driving is complete, the pile casings shall be filled with Class S Concrete, an approved non-shrink grout, mixture used for Portland Cement Pavement, or another approved material in a single continuous operation to completely fill voids. This work and material will not be paid for directly but shall be considered subsidiary to the Item "STEEL PILING (HP14x73)".

DRIVING SYSTEM: The driving system approval and the ultimate bearing capacity determination for piling shall be based on the requirements of Subsection 805.09(b), "Method B - Wave Equation Analysis (WEAP)". It is estimated that the minimum rated hammer energy required to obtain the minimum ultimate bearing capacity for all HP14x73 piles at Bent Nos. 1 - 3 shall be 28,000 foot-pounds per blow.

PILE FOOTINGS: The top of the footing at Bent 2 shall be set a minimum of 2' below natural ground as determined by the lowest surface elevation within the footprint of the footing or at the elevations shown on the plans, whichever is lower. Foundation for footing shall be prepared in accordance with Subsection 801.04. Foundation piles shall not be driven until after the excavation to bottom of footing is complete. Excavation shall be backfilled and compacted to the level of the existing ground in accordance with Subsection 801.08.

PAINTING: All Structural Steel except galvanized members, surfaces in contact with concrete, and as otherwise noted shall be painted as specified in Subsection 807.75. The color of the paint shall be Dark Brown and shall match Federal Standard 595B, Color Chip No. 20108.

TEXTURED COATING FINISH: Class 3 Textured Coating Finish shall be applied to bridge and retaining wall surfaces as specified in Special Provision "TEXTURED COATING FINISH" and in accordance with Subsection 802.19(B)(3). Textured Coating Finish shall not be applied on surfaces where Class 2 Protective Surface Treatment is applied.

BRIDGE DECK: The concrete bridge deck shall be given a tine finish as specified for final finishing in Subsection 802.19 for Class 5 Tined Bridge Roadway Surface Finish.

PROTECTIVE SURFACE TREATMENT: Class 2 Protective Surface Treatment shall be applied to the roadway surface and roadway face and top of the concrete bridge rails in accordance with Section 803.

EXISTING BRIDGE: Existing Bridge No. 03873 (Log Mile 2.17) is 214.24' in length, 31.50' wide (26.0' clear roadway) and consists of a concrete slab on I-beam spans (4 spans total) supported by concrete columns on spread footings at Bents 2-4 and concrete pile bents at Bents 1 and 5. Plans of the existing structure, if available, may be obtained upon request to the Construction Contract Development Section of the Program Management Division.

REMOVAL AND SALVAGE: After the new bridge is open to traffic, existing Bridge No. 03873, along with the existing concrete riprap along the bridge end slopes, shall be removed in accordance with Section 205. The work required to remove the concrete riprap shall be considered subsidiary to the Item "REMOVAL OF EXISTING BRIDGE STRUCTURE (SITE NO. 1)". All material from the existing bridge, except the existing steel I-beams, shall become property of the Contractor. The I-beams shall become property of Clark County. The Contractor shall coordinate with the Engineer for removal and delivery of salvaged material. This material shall be delivered to the Clark County Road Shop, 1501 Hwy. 67 S, Arkadelphia, AR, 71923. Payment for this work shall be considered incidental to the item "REMOVAL OF EXISTING BRIDGE STRUCTURE (SITE NO. 1)".

MAINTENANCE OF TRAFFIC: See Roadway Plans.

DETAIL DRAWINGS:	DRAWING NO:
Retaining Walls	65156 - 65162
End Bents	65163 - 65165
Intermediate Bent	65166 - 65168
Elastomeric Bearings	65169
200' Continuous Plate Girder Unit	65170 - 65174
Type Special Approach Slabs	65174A
Conrete Riprap	55002
General Notes For Steel Bridge Structures	55006
Details For Steel Bridge Structures	55007
Poured Silicone Joints	55008
Steel Piles	55020
Bridge Traffic Rail (SSTR36)	55070
Type F Approach Gutters	55030F

STATE OF ARKANSAS
LICENSED PROFESSIONAL ENGINEER
No.8017
JOHN H. RUDDELL

Digitally Signed 09/02/2022

BRIDGE ENGINEER

SHEET 3 OF 4
LAYOUT OF BRIDGE
HIGHWAY 51 OVER I-30
I-30 STR. & APPRS. (HWY. 51) (S)
CLARK COUNTY

ROUTE 51 SEC. 1

ARKANSAS STATE HIGHWAY COMMISSION

LITTLE ROCK, ARK.

DRAWN BY: HEW DATE: DEC. 2020 FILENAME: b070513_L3.dgn
CHECKED BY: RLW DATE: JAN. 2021 SCALE: No Scale
DESIGNED BY: JME DATE: NOV. 2020
BRIDGE NO. 07582 DRAWING NO. 65154

JMEdwards 9/2/2022 11:30:08 AM
WORKSPACE: ARDOT Bridge (2019)
L:\2017\1717634-070513 I-30 Str-Apprs Hwy 51\Drawings\b070513_S103_GN.dgn
REVISED DATE:

DATE REVISED	DATE FILMED	DATE REVISED	DATE FILMED	FED. ROAD DIST. NO.	STATE	FED. AID PROJ. NO.	SHEET NO.	TOTAL SHEETS
				6	ARK.			
				JOB NO.		070513	56	109
				07582		LAYOUT		65155

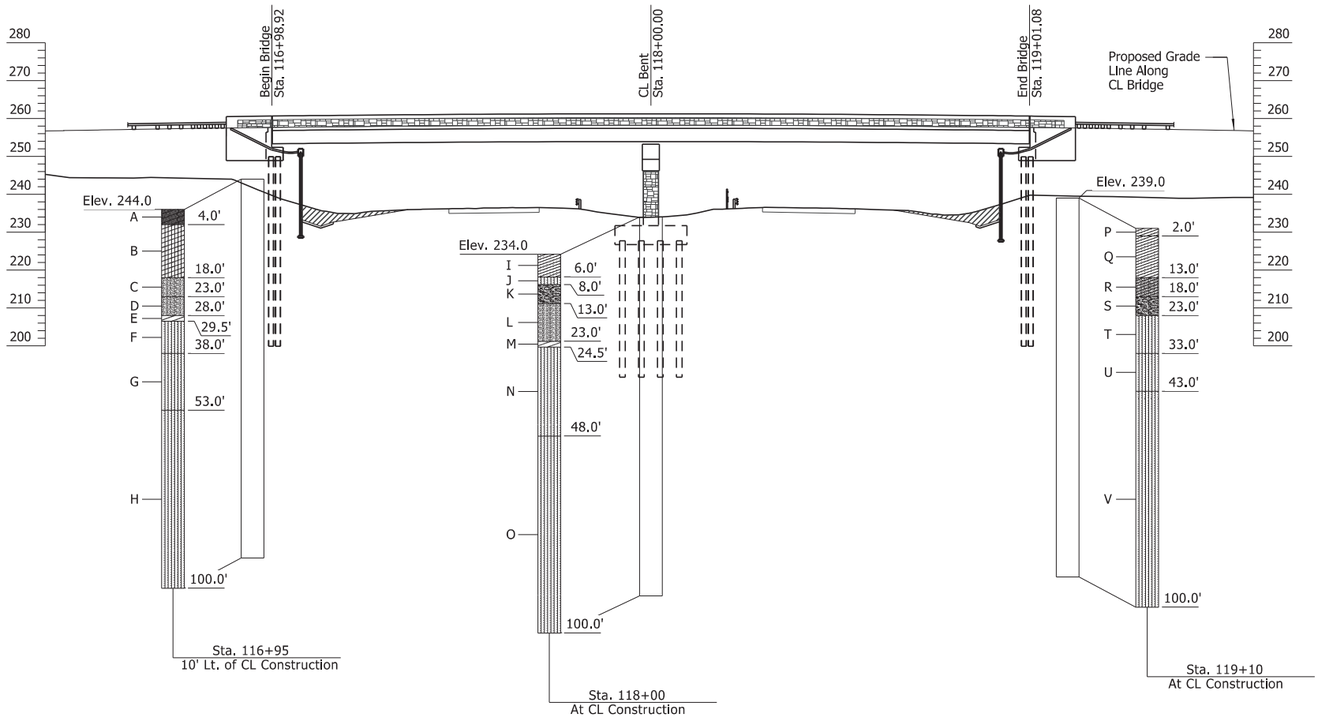

ELEVATION

N-VALUES

Sta. 116+95 10' Lt. of CL Construction	Sta. 118+00 At CL Construction	Sta. 119+10 At CL Construction
0.5-1.5, N=10	0.5-1.5, N=17	0.5-1.5, N=12
2.5-3.5, N=10	2.5-3.5, N=20	2.5-3.5, N=13
4.5-5.5, N=13	4.5-5.5, N=18	4.5-5.5, N=16
6.5-7.5, N=20	6.5-7.5, N=21	6.5-7.5, N=19
9.0-10.0, N=22	9.0-10.0, N=32	9.0-10.0, N=18
14.0-15.0, N=30	14.0-15.0, N=32	14.0-15.0, N=58
19.0-20.0, N=26	19.0-20.0, N=44	19.0-20.0, N=35
24.0-25.0, N=50/6"	24.0-25.0, N=50/6"	24.0-25.0, N=31
29.0-30.0, N=50/10"	29.0-30.0, N=25/0"	29.0-30.0, N=41
34.0-35.0, N=50/11"	34.0-35.0, N=25/0"	34.0-35.0, N=25/0"
39.0-40.0, N=25/0"	39.0-40.0, N=25/0"	39.0-40.0, N=25/0"
44.0-45.0, N=25/0"	44.0-45.0, N=25/0"	44.0-45.0, N=48
49.0-50.0, N=25/0"	49.0-50.0, N=50/5"	49.0-50.0, N=50/10"
54.0-55.0, N=50/3"	54.0-55.0, N=50/4"	54.0-55.0, N=50/8"
59.0-60.0, N=50/4"	59.0-60.0, N=50/6"	59.0-60.0, N=50/5"
64.0-65.0, N=50/6"	64.0-65.0, N=50/4"	64.0-65.0, N=50/3"
69.0-70.0, N=50/4"	69.0-70.0, N=50/4"	69.0-70.0, N=50/3"
74.0-75.0, N=50/4"	74.0-75.0, N=25/0"	74.0-75.0, N=50/4"
79.0-80.0, N=50/4"	79.0-80.0, N=50/2"	79.0-80.0, N=50/6"
84.0-85.0, N=50/6"	84.0-85.0, N=50/3"	84.0-85.0, N=50/6"
89.0-90.0, N=50/4"	89.0-90.0, N=50/6"	89.0-90.0, N=50/7"
94.0-95.0, N=50/4"	94.0-95.0, N=50/6"	94.0-95.0, N=50/6"
99.0-100.0, N=50/3"	99.0-100.0, N=50/7"	99.0-100.0, N=50/4"

BORING LEGEND

A - Firm to stiff reddish brown, tan and gray fine sandy clay w/ silt pockets and ferrous stains (fill)
B - Stiff red, gray and reddish tan silty clay, sandy
C - Medium dense light gray fine to medium sand
D - Dense to very dense tan and reddish tan fine to coarse sand, sightly silty w/ fine gravel
E - Very stiff dark brownish gray clay w/ fine sand pockets
F - Dense to very dense dark gray silty fine sand, calcareous and weakly cemented
G - Dense to very dense gray silty fine sand, calcareous, cemented w/ occasional fine gravel-sized sandstone nodules
H - Dense to very dense bluish gray silty fine sand, calcareous, weakly cemented w/ occasional calcareous nodules and inclusions
I - Medium dense yellowish tan, reddish brown and gray clayey fine sand, silty
J - Medium dense yellowish tan, reddish brown and gray silty fine sand
K - Dense reddish brown sandy fine to coarse gravel
L - Dense gray and tan fine sand, sightly silty w/ ferrous stains and cemented silt nodules
M - Very stiff drak gray clay
N - Dense to very dense gray silty fine sand, calcareous, cemented w/ shell fragments
O - Dense to very dense bluish gray silty fine sand, calcareous, weakly cemented w/ calcareous nodules and occasional shell fragments
P - Medium dense brown, reddish brown and gray clayey fine sand w/ trace fine gravel and ferrous nodules (fill)
Q - Medium dense red, gray and reddish tan clayey fine sand
R - Dense to very dense tan and gray clayey fine to coarse sand w/ a little fine chert gravel
S - Dense tan sandy fine to coarse gravel, sightly silty
T - Dense bluish gray silty fine sand, calcareous and weakly cemented
U - Dense to very dense light gray silty fine sand, calcareous and cemented w/ occasional fine gravel-sized sandstone nodules
V - Dense bluish gray silty fine sand, calcareous and weakly cemented with occasional calcareous nodules

STATE OF ARKANSAS
LICENSED PROFESSIONAL ENGINEER
No.8017
JOHN H. RUDDELL

Digitally Signed 09/02/2022
BRIDGE ENGINEER

SHEET 4 OF 4
LAYOUT OF BRIDGE
HIGHWAY 51 OVER I-30
I-30 STR. & APPRS. (HWY. 51) (S)
CLARK COUNTY
ROUTE 51 SEC. 1
ARKANSAS STATE HIGHWAY COMMISSION
LITTLE ROCK, ARK.

DRAWN BY: HEW DATE: NOV. 2020 FILENAME: b070513_L4.dgn
CHECKED BY: RLW DATE: JAN. 2021 SCALE: 1" = 20'
DESIGNED BY: JME DATE: NOV. 2020
BRIDGE NO. 07582 DRAWING NO. 65155

JMEdwards 9/2/2022 11:30:09 AM
WORKSPACE: ARDOT Bridge (2019)
L:\2017\17017634 - 070513 I-30 St-Apprs Hwy 51\Drawings\b070513_S104_LO.dgn
REVISED DATE:

DATE REVISED	DATE FILMED	DATE REVISED	DATE FILMED	FED. ROAD DIST. NO.	STATE	FED. AID PROJ. NO.	SHEET NO.	TOTAL SHEETS
				6	ARK.			
				JOB NO.		070513	57	109
				1	07582	RETAINING WALLS		65156

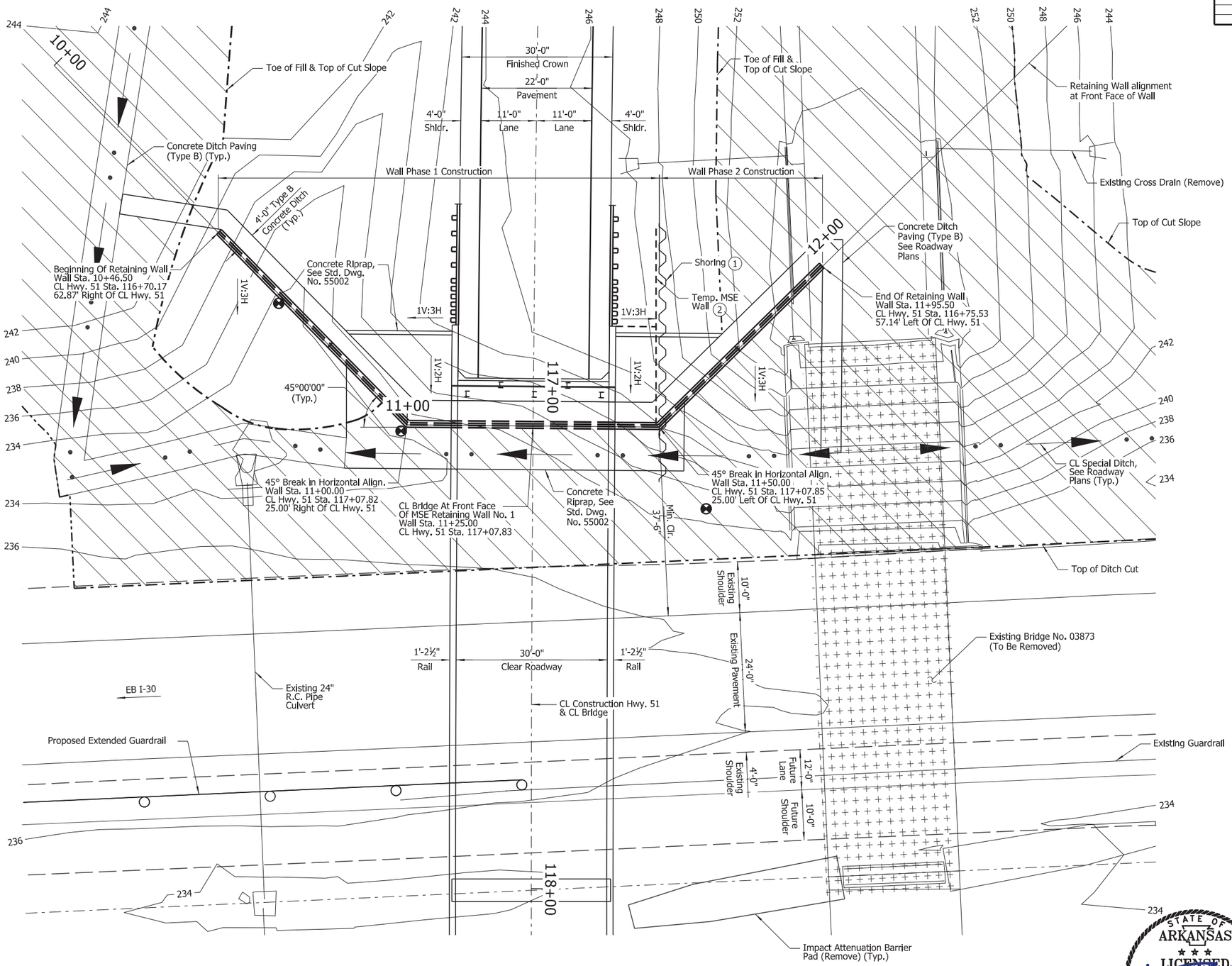

PLAN - MSE RETAINING WALL NO. 1

Scale: 3/32" = 1'-0"

FOR R/W DATA, SEE ROADWAY PLANS

GENERAL NOTES

DESIGN SPECIFICATIONS: AASHTO LRFD Bridge Design Specifications (2017, 8th Edition)

SEISMIC ZONE: 1 A_S = 0.08g Site Class = C

4" Pipe underdrains shall be used for the full length of wall.

Elevations are approximate. Wall dimensions may vary depending on wall design selected.

Reinforcement placement and details for retaining walls may be affected by end bent construction and proposed roadway drainage structures. See End Bent Dwg. Nos. 65163 - 65165 for pile locations, cap details and wingwall details. See Roadway Plans for locations and details of drainage structures.

For ditch paving, see Std. Dwg. CDP-1.

See Special Provision "RETAINING WALLS" for additional information.

Boring logs may be obtained from the Construction Contract Development Section of the Program Management Division.

Preformed joint filler, joint sealer, and pipe underdrains will not be paid for directly, but will be considered subsidiary to the Item "RETAINING WALL".

An Architectural Finish (Ashlar Stone or approved equivalent) shall be applied to the face of the retaining walls. See Special Provision "RETAINING WALLS".

Class 3 Textured Coating Finish shall be applied to the exposed face of the concrete wall panels and coping as specified in Special Provision "TEXTURED COATING FINISH" and in accordance with Subsection 802.19(b)(3).

1 See Special Provision "SHORING".

2 See Special Provision "TEMPORARY RETAINING WALLS".

NOTE:
Offset dimensions and stationing are measured from CL Construction Hwy. 51 to front vertical face of Retaining Wall.

STATE OF ARKANSAS
LICENSED PROFESSIONAL ENGINEER
No.8017
JOHN H. RUDDELL

Digitally Signed 09/02/2022

BRIDGE ENGINEER

SHEET 1 OF 7
DETAILS OF RETAINING WALLS

ROUTE SEC.

ARKANSAS STATE HIGHWAY COMMISSION

LITTLE ROCK, ARK.

DRAWN BY: HEW DATE: JAN. 2021 FILENAME: b070513_RW1.dgn
CHECKED BY: JHR DATE: FEB. 2021 SCALE: As Shown
DESIGNED BY: JME DATE: JAN. 2021
BRIDGE NO. 07582 DRAWING NO. 65156

JMEdwards 9/2/2022 11:30:10 AM
WORKSPACE: ARDOT Bridge (2019)
L:\2017\17017634 - 070513 I-30 St-Appns Hwy 51\Drawings\b070513_S201_Wall.dgn
REVISED DATE:

DATE REVISED	DATE FILMED	DATE REVISED	DATE FILMED	FED. ROAD DIST. NO.	STATE	FED. AID PROJ. NO.	SHEET NO.	TOTAL SHEETS
				6	ARK.			
				JOB NO.		070513	58	109
				07582		RETAINING WALLS		65157

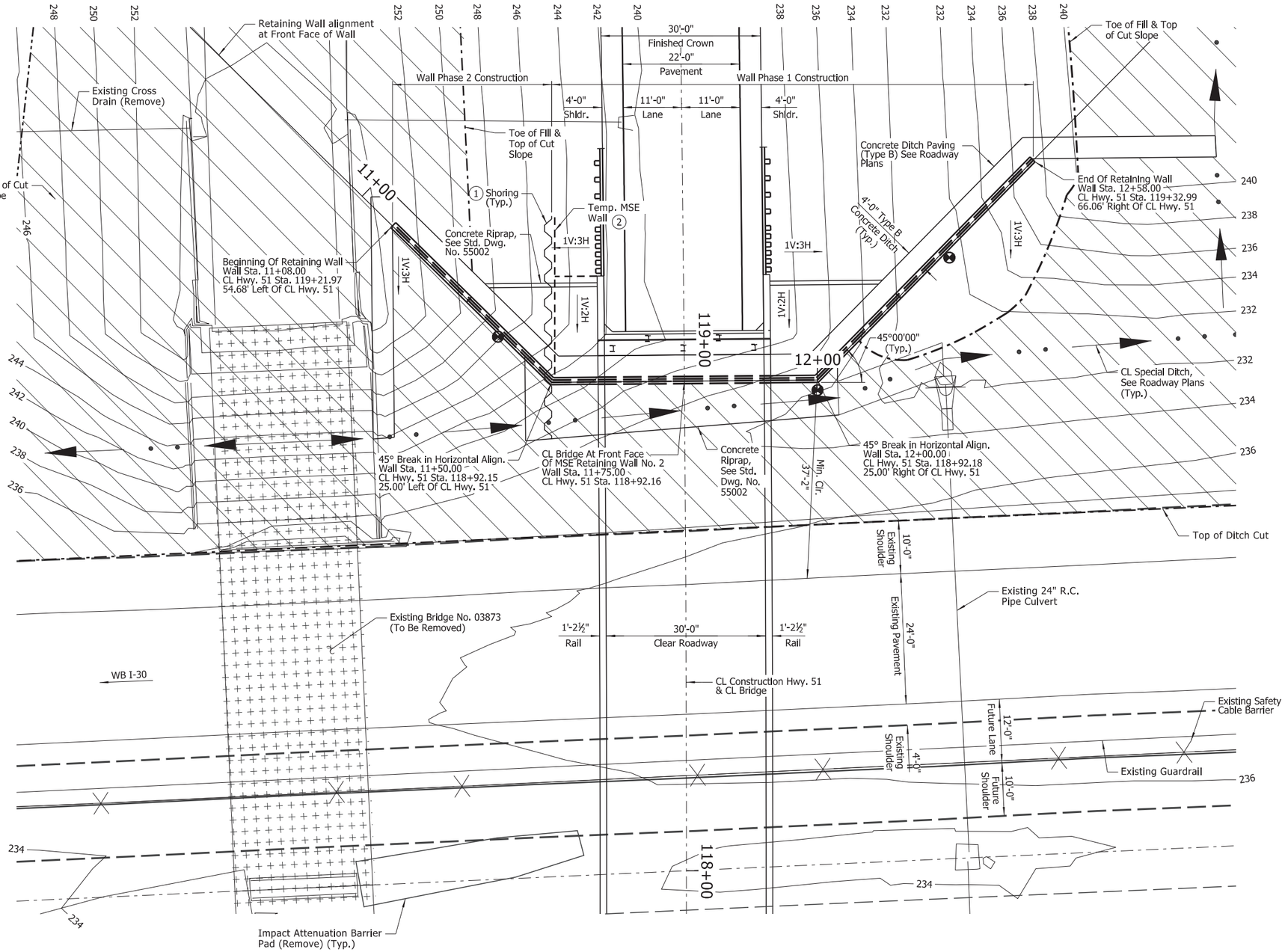

PLAN - MSE RETAINING WALL NO. 2

Scale: 3/32" = 1'-0"

NOTE:
For "GENERAL NOTES", see Dwg. No. 65156.

1 See Special Provision "SHORING".

2 See Special Provision "TEMPORARY RETAINING WALLS."

NOTE:
Offset dimensions and stationing are measured from CL Construction Hwy. 51 to front vertical face of Retaining Wall.

FOR R/W DATA, SEE ROADWAY PLANS

STATE OF ARKANSAS
LICENSED PROFESSIONAL ENGINEER
No.8017
JOHN H. RUDDELL

Digitally Signed 09/02/2022

BRIDGE ENGINEER

SHEET 2 OF 7
DETAILS OF RETAINING WALLS

ROUTE SEC.

ARKANSAS STATE HIGHWAY COMMISSION

LITTLE ROCK, ARK.

DRAWN BY: HEW DATE: JAN. 2021 FILENAME: b070513_RW2.dgn
CHECKED BY: JHR DATE: FEB. 2021 SCALE: As Shown
DESIGNED BY: JME DATE: JAN. 2021

BRIDGE NO. 07582 DRAWING NO. 65157

JMEdwards 9/2/2022 11:30:10 AM
WORKSPACE: ARDOT Bridge (2019)
L:\2017\17017634 - 070513 I-30 Str-Apprs Hwy 51\Drawings\b070513_S202_Wall.dgn
REVISED DATE:

DATE REVISED	DATE FILMED	DATE REVISED	DATE FILMED	FED. ROAD DIST. NO.	STATE	FED. AID PROJ. NO.	SHEET NO.	TOTAL SHEETS
				6	ARK.			
				JOB NO.		070513	59	109
				07582	RETAINING WALLS			65158

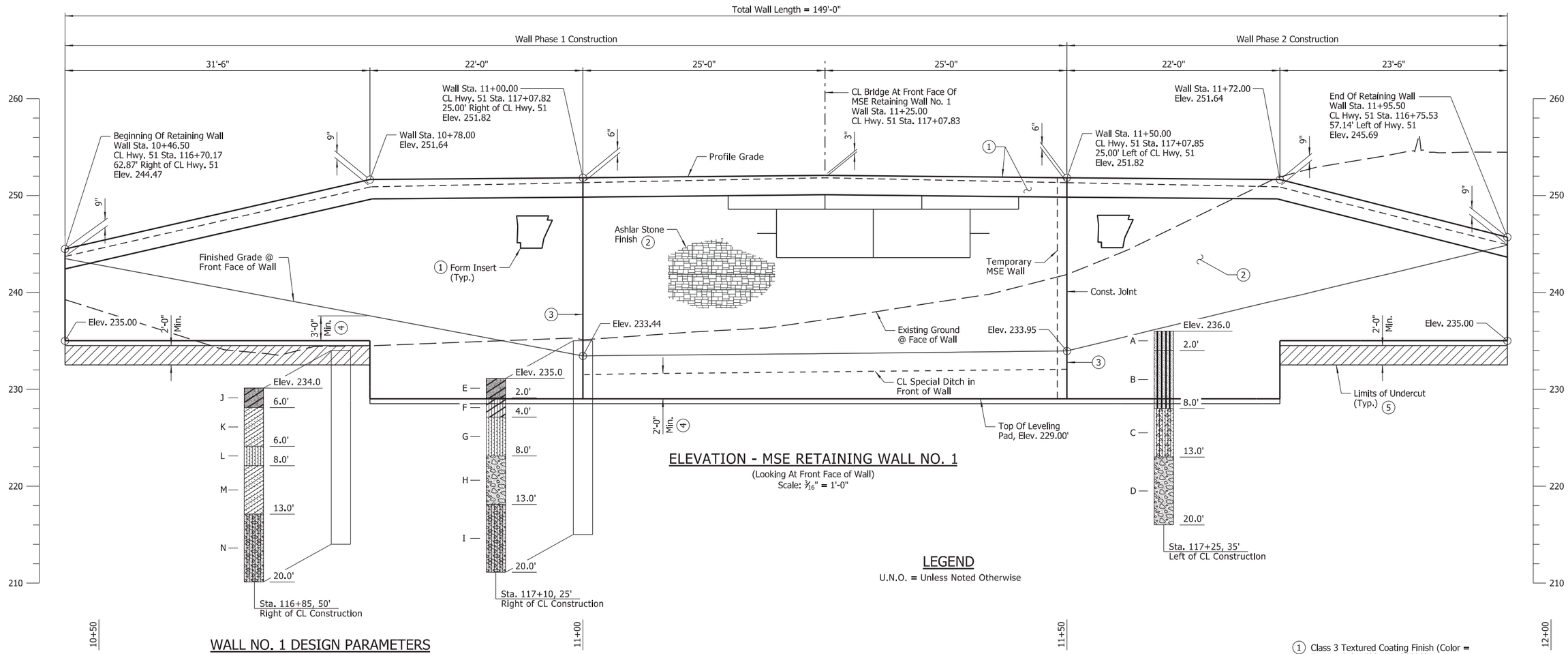

ELEVATION - MSE RETAINING WALL NO. 1

(Looking At Front Face of Wall)
Scale: 3/16" = 1'-0"

LEGEND

U.N.O. = Unless Noted Otherwise

WALL NO. 1 DESIGN PARAMETERS

Leveling Pad Elevation	Factored Bearing Resistance (KSF)	Minimum Strap Length (FT)
229.00	6.9	0.7H
235.00	5.4	0.7H

NOTE:
"H" shall be measured from the top of leveling pad elevation to the finished surface of the roadway.

N-VALUES

Sta. 116+85, 50' Right of CL Construction	Sta. 117+10, 25' Right of CL Construction	Sta. 117+25, 35' Left of CL Construction
0.5-1.5, N=5	0.5-1.5, N=6	0.5-1.5, N=5
2.5-3.5, N=23	2.5-3.5, N=18	2.5-3.5, N=39
4.5-5.5, N=31	4.5-5.5, N=24	4.5-5.5, N=26
6.5-7.5, N=50/10"	6.5-7.5, N=29	6.5-7.5, N=26
9.0-10.0, N=50/8"	9.0-10.0, N=49	9.0-10.0, N=50/8"
14.0-15.0, N=50/10"	14.0-15.0, N=50/10"	14.0-15.0, N=50/6"
19.0-20.0, N=50/5"	19.0-20.0, N=46	19.0-20.0, N=50/4"

NOTES:
Offset dimensions and stationing are measured from CL Construction Hwy. 51 to front vertical face of retaining wall.

For "FORM INSERT DETAILS", see Dwg. No. 65162.

For "GENERAL NOTES", see Dwg. No. 65156.

For miscellaneous retaining wall details and details of undercut, see Dwg. Nos. 65160 and 65162, respectively.

1. Class 3 Textured Coating Finish (Color = Brown, Color Chip No. 33522)
2. "Ashlar Stone" Pattern & Class 3 Textured Coating Finish (Color = Brown, Color Chip No. 30219)
3. 45° break in horizontal alignment of retaining wall. Provide obtuse corner element at each break point.
4. Embed the leveling pad a minimum of 3'-0" below proposed grade at wall step locations and a minimum of 2'-0" below CL Special Ditch along the North face of the retaining wall.
5. Undercut areas shall be backfilled using Aggregate Base Course (Class 7). See Dwg. No. 65162 for undercut details.

TABLE OF QUANTITIES (WALL NO. 1)

(FOR INFORMATION ONLY)

ITEM NO.	210	605	303	SP JOB 070513	SP JOB 070513	SP JOB 070513	SP JOB 070513
ITEM	UNCLASSIFIED EXCAVATION 6	CONCRETE DITCH PAVING (TYPE B)	AGGREGATE BASE COURSE (CLASS 7) 7	SELECT GRANULAR BACKFILL	RETAINING WALL	TEXTURED COATING FINISH	TEMPORARY RETAINING WALL
UNIT	CU. YD.	SQ. YD.	TON	CU. YD.	SQ. FT.	SQ. YD.	SQ. FT.
Wall No. 1	965	97	185	1,515	2,880	244	1,360

6 Includes 88 Cu. Yds. for undercut.

7 Estimated quantity for backfill of undercut area.

BORING LEGEND

A - Loose reddish tan, red and gray fine sandy silt
B - Dense light gray w/ red fine sandy silt
C - Dense to very dense light tan w/ reddish tan silty fine sand w/ some fine chert gravel
D - Dense to very dense light tan and reddish tan sandy fine chert gravel, slightly silty
E - Soft dark brown fine sandy clay w/ a little fine to coarse gravel and occasional rootlets (fill)
F - Stiff reddish tan, gray and red silty clay, sandy
G - Medium dense light tan w/ reddish tan and red silty fine sand
H - Dense tan and reddish tan sandy fine to coarse chert gravel, slightly silty
I - Dense to very dense tan silty fine to coarse sand w/ some fine to coarse gravel
J - Soft brown and dark brown fine sandy clay, wet w/ a little fine gravel and occasional decayed organics (fill)
K - Medium dense light gray and red clayey fine sand w/ trace fine to coarse gravel
L - Dense to very dense light tan and gray silty fine sand w/ clayey fine sand pockets
M - Dense to very dense tan silty fine sand w/ trace fine gravel
N - Dense to very dense tan silty fine to coarse sand w/ some fine gravel

STATE OF ARKANSAS
LICENSED PROFESSIONAL ENGINEER
No.8017
JOHN H. RUDDELL

Digitally Signed 09/02/2022
BRIDGE ENGINEER

SHEET 3 OF 7
DETAILS OF RETAINING WALLS

ROUTE SEC.

ARKANSAS STATE HIGHWAY COMMISSION

LITTLE ROCK, ARK.

DRAWN BY: HEW DATE: JAN. 2021 FILENAME: b070513_RW3.dgn
CHECKED BY: JHR DATE: FEB. 2021 SCALE: As Shown
DESIGNED BY: JME DATE: JAN. 2021

BRIDGE NO. 07582 DRAWING NO. 65158

JMEdwards 9/2/2022 11:30:11 AM
WORKSPACE: ARDOT Bridge (2019)
L:\2017\17017634 - 070513 I-30 Str-4pprs Hwy 51\Drawings\b070513_S203_Wall.dgn
REVISED DATE:

DATE REVISED	DATE FILMED	DATE REVISED	DATE FILMED	FED. ROAD DIST. NO.	STATE	FED. AID PROJ. NO.	SHEET NO.	TOTAL SHEETS
				6	ARK.			
				JOB NO.		070513	60	109
				07582	RETAINING WALLS			65159

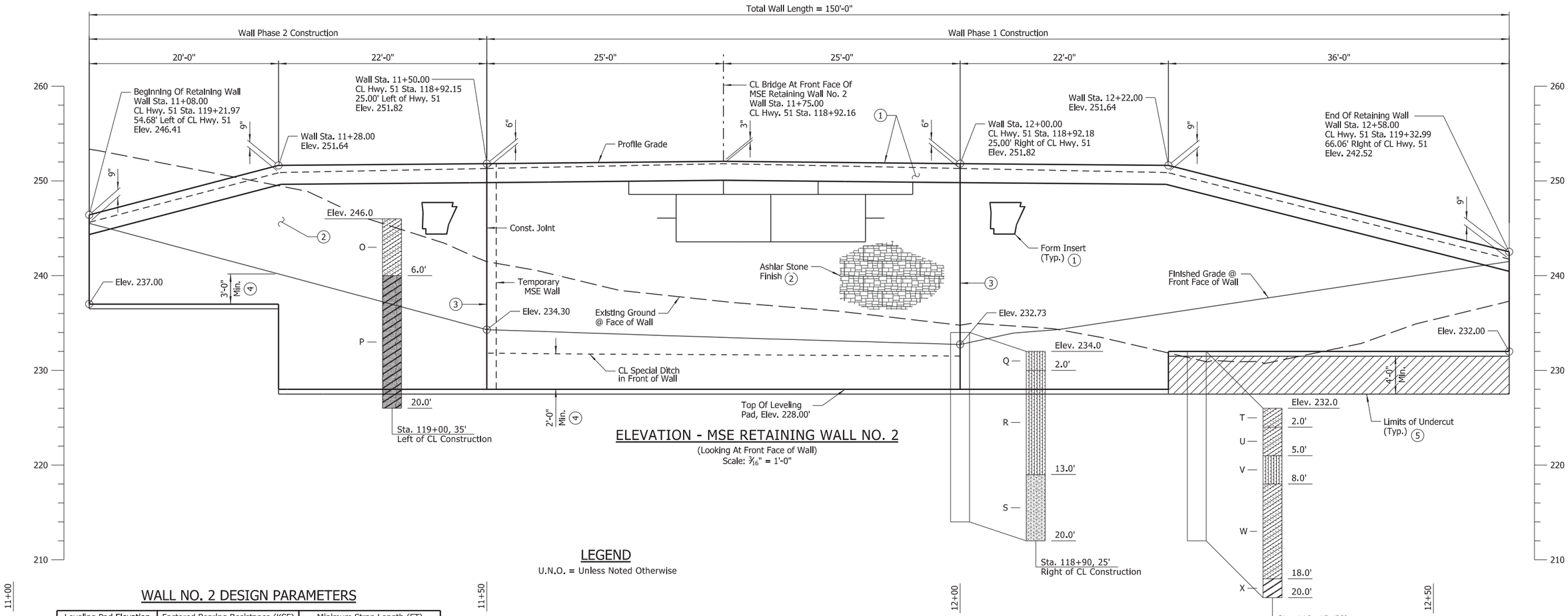

ELEVATION - MSE RETAINING WALL NO. 2

(Looking At Front Face of Wall)
Scale: 3/16" = 1'-0"

LEGEND

U.N.O. = Unless Noted Otherwise

WALL NO. 2 DESIGN PARAMETERS

Leveling Pad Elevation	Factored Bearing Resistance (KSF)	Minimum Strap Length (FT)
237.00	5.8	0.7H
228.00	6.9	0.7H
232.00	6.3	0.7H

NOTE:
"H" shall be measured from the top of leveling pad elevation to the finished surface of the roadway.

N-VALUES

Sta. 119+00, 35' Left of CL Construction	Sta. 118+90, 25' Right of CL Construction	Sta. 119+15, 50' Right of CL Construction
0.5-1.5, N=11	0.5-1.5, N=3	0.5-1.5, N=6
2.5-3.5, N=10	2.5-3.5, N=19	2.5-3.5, N=9
4.5-5.5, N=7	4.5-5.5, N=19	4.5-5.5, N=15
6.5-7.5, N=21	6.5-7.5, N=13	6.5-7.5, N=16
9.0-10.0, N=14	9.0-10.0, N=39	9.0-10.0, N=27
14.0-15.0, N=25	14.0-15.0, N=42	14.0-15.0, N=42
19.0-20.0, N=34	19.0-20.0, N=44	19.0-20.0, N=45

NOTES:
Offset dimensions are measured from CL Construction Hwy. 51 to outside vertical face of retaining wall.

For "FORM INSERT DETAILS", see Dwg. No. 65162.

For "GENERAL NOTES", see Dwg. No. 65156.

For miscellaneous retaining wall details and details of undercut, see Dwg. Nos. 65160 and 65162, respectively.

1. Class 3 Textured Coating Finish (Color = Brown, Color Chip No. 33522)
2. "Ashlar Stone" Pattern & Class 3 Textured Coating Finish (Color = Brown, Color Chip No. 30219)
3. 45° break in horizontal alignment of retaining wall. Provide obtuse corner element at each break point.
4. Embed the leveling pad a minimum of 3'-0" below proposed grade at wall step locations and a minimum of 2'-0" below CL Special Ditch along the South face of the retaining wall.
5. Undercut areas shall be backfilled using Aggregate Base Course (Class 7). See Dwg. No. 65162 for undercut details.

TABLE OF QUANTITIES (WALL NO. 2)

(FOR INFORMATION ONLY)

ITEM NO.	210	605	303	SP JOB 070513	SP JOB 070513	SP JOB 070513	SP JOB 070513
ITEM	UNCLASSIFIED EXCAVATION 6	CONCRETE DITCH PAVING (TYPE B)	AGGREGATE BASE COURSE (CLASS 7) 7	SELECT GRANULAR BACKFILL	RETAINING WALL	TEXTURED COATING FINISH	TEMPORARY RETAINING WALL
UNIT	CU. YD.	SQ. YD.	TON	CU. YD.	SQ. FT.	SQ. YD.	SQ. FT.
Wall No. 2	954	102	278	1,667	3,028	250	1,520

6. Includes 132 Cu. Yds. for undercut.
7. Estimated quantity for backfill of undercut area.

BORING LEGEND

O - Medium dense brown and reddish brown clayey fine sand, silty w/ a little fine to coarse gravel (fill)
P - Stiff red and gray fine sandy clay
Q - Very loose tan, reddish tan and dark brown silty fine sand, slightly clayey w/ trace fine gravel (fill)
R - Medium dense tan silty fine sand, slightly clayey
S - Dense tan fine to coarse sand, slightly silty w/ a little fine to coarse gravel
T - Loose brown and reddish brown clayey fine sand, silty w/ trace fine gravel (fill)
U - Loose tan, gray and red clayey fine sand, silty
V - Medium dense tan silty fine sand
W - Medium dense tan and reddish tan clayey fine to coarse sand, slightly silty w/ a little fine to coarse gravel
X - Very stiff reddish tan and grayish brown clay, slightly sandy, varved

STATE OF ARKANSAS
LICENSED PROFESSIONAL ENGINEER
No.8017
JOHN H. RUDDELL

Digitally Signed 09/02/2022
BRIDGE ENGINEER

SHEET 4 OF 7
DETAILS OF RETAINING WALLS

ROUTE SEC.

ARKANSAS STATE HIGHWAY COMMISSION
LITTLE ROCK, ARK.

DRAWN BY: HEW DATE: JAN. 2021 FILENAME: b070513_RW4.dgn
CHECKED BY: JHR DATE: FEB. 2021 SCALE: As Shown
DESIGNED BY: JME DATE: JAN. 2021
BRIDGE NO. 07582 DRAWING NO. 65159

JMEdwards 9/2/2022 11:30:11 AM
WORKSPACE: ARDOT Bridge (2019)
L:\2017\17017634 - 070513 I-30 Str-Apprs Hwy 51\Drawings\b070513_S204_Wall.dgn
REVISED DATE:

DATE REVISED	DATE FILMED	DATE REVISED	DATE FILMED	FED. ROAD DIST. NO.	STATE	FED. AID PROJ. NO.	SHEET NO.	TOTAL SHEETS
				6	ARK.			
				JOB NO.		070513	61	109
				07582	RETAINING WALLS			65160

NOTE:
All backfill material within the reinforcement zone shall be included in the price bid for "SELECT GRANULAR BACKFILL".

1. The 4'-0" concrete ditch shall be constructed without the 3" weep holes. See Std. Dwg. No. CDP-1 For Ditch Paving Details.
2. ½" Preformed Joint Filler (AASHTO M 153, Type 1) per Subsection 501.02(h)(1). Seal with ½"x1" Type 3 or 4 Joint Sealer per Subsection 501.02(h)(2).
3. Casings shall be placed after excavation to top of leveling pad is completed. For locations of casings, see "FOUNDATION PLAN" on Dwg. No. 65165.
4. Varies from 3" to 9", See Dwg. Nos. 65158 and 65159.
5. Excavation required for reinforcement zone and leveling pad will be paid for under the pay item "UNCLASSIFIED EXCAVATION", See SP "RETAINING WALLS".
6. Pipe underdrain shall extend to daylight towards CL Special Ditch parallel to I-30.
7. The Contractor shall have the option of using a cut slope or shoring to maintain stability of the cut. Any excavation beyond the limits of the reinforcement zone or any shoring used will not be paid for directly, but shall be considered incidental to the item "RETAINING WALL".
8. In wall areas where existing ground is below the projected backslope of the theoretical cut slope, pay limits of excavation shall extend to existing ground.

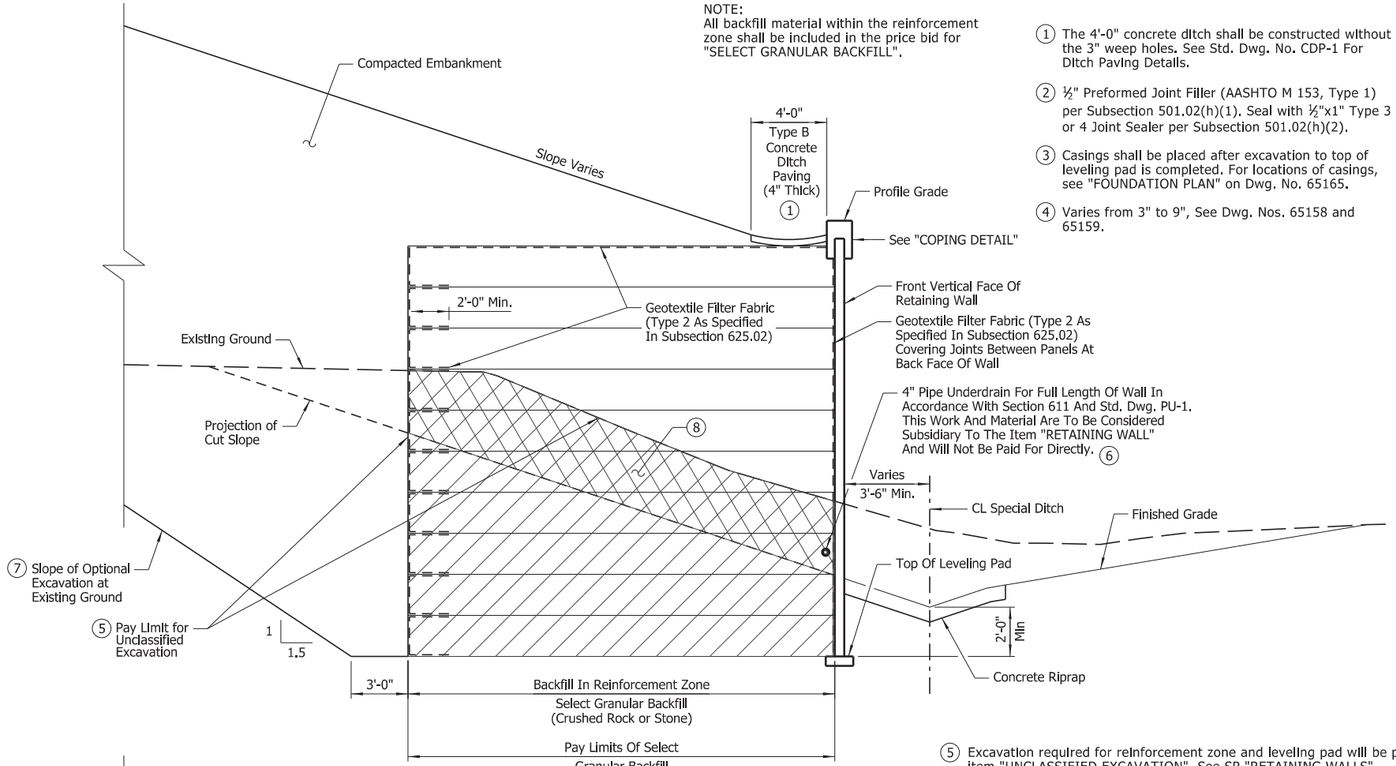

BACKFILL METHOD B

No Scale

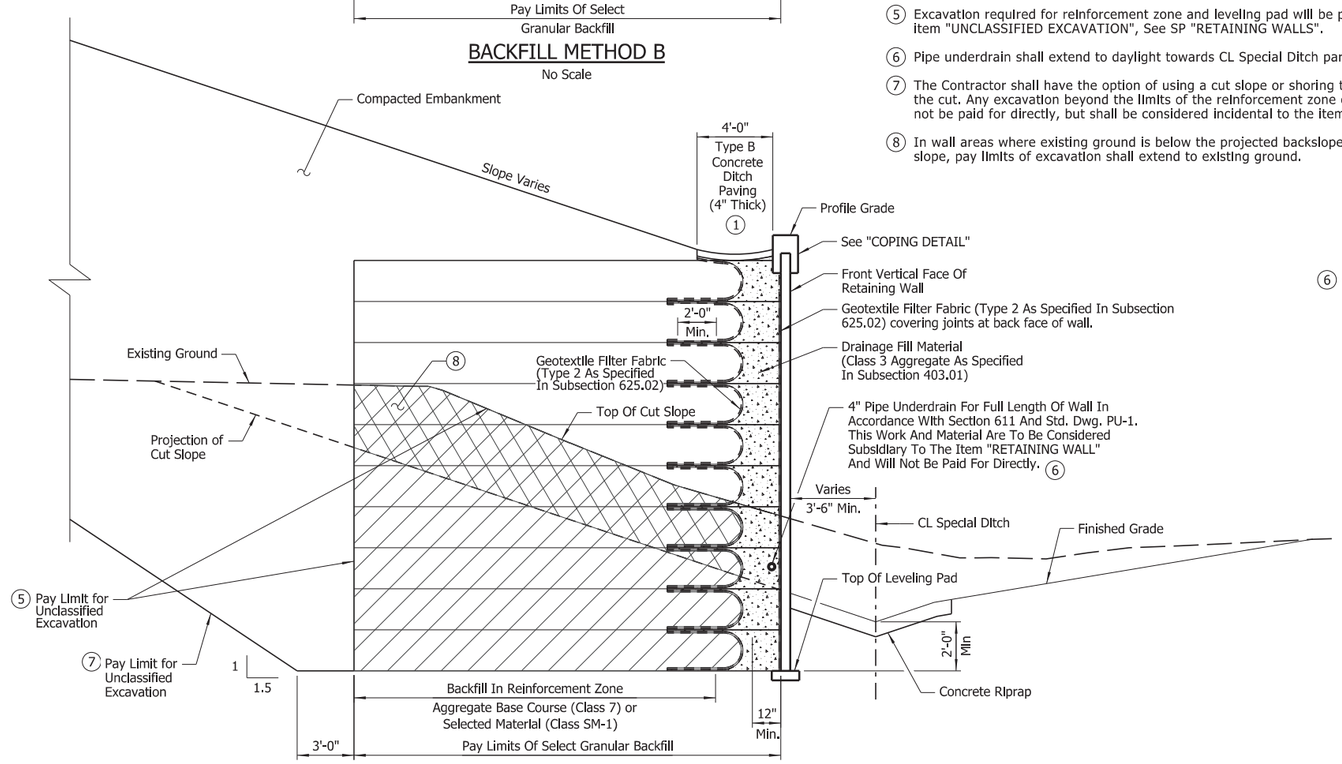

BACKFILL METHOD A

No Scale

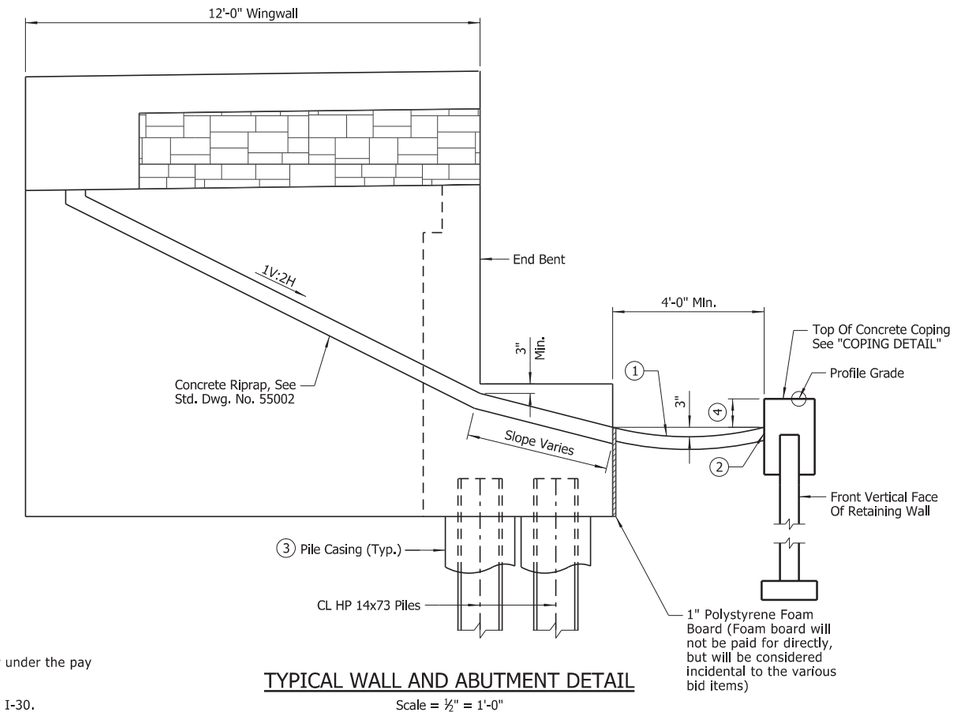

TYPICAL WALL AND ABUTMENT DETAIL

Scale = ½" = 1'-0"

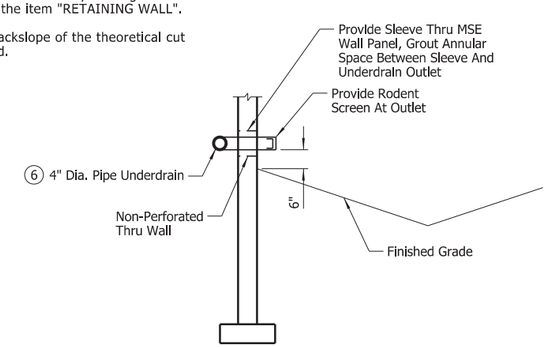

OUTLET DETAIL

No Scale

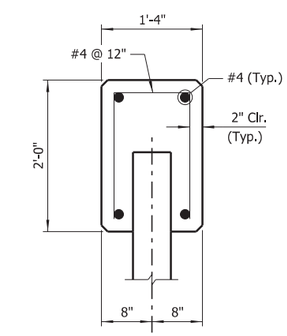

COPING DETAIL

No Scale

NOTES:
Reinforcing steel and Class S(AE) concrete for coping shall not be paid for directly, but will be considered subsidiary to the item "RETAINING WALL."

Precast coping may be substituted for cast-in-place coping shown.

STATE OF ARKANSAS
LICENSED PROFESSIONAL ENGINEER
No.8017
JOHN H. RUDDELL

Digitally Signed 09/02/2022

BRIDGE ENGINEER

SHEET 5 OF 7
DETAILS OF RETAINING WALLS

ROUTE SEC.

ARKANSAS STATE HIGHWAY COMMISSION

LITTLE ROCK, ARK.

DRAWN BY: HEW DATE: JAN. 2021 FILENAME: b070513_RW5.dgn
CHECKED BY: JHR DATE: FEB. 2021 SCALE: As Shown
DESIGNED BY: JME DATE: FEB. 2021

BRIDGE NO. 07582 DRAWING NO. 65160

JMEdwards 9/2/2022 11:30:12 AM
WORKSPACE: ARDOT Bridge (2019)
L:\2017\17017634 - 070513 I-30 Str-4pprs Hwy 51\Drawings\b070513_S205_Wall.dgn
REVISED DATE:

DATE REVISED	DATE FILMED	DATE REVISED	DATE FILMED	FED. ROAD DIST. NO.	STATE	FED. AID PROJ. NO.	SHEET NO.	TOTAL SHEETS
				6	ARK.			
				JOB NO.		070513	62	109
				07582	RETAINING WALLS			65161

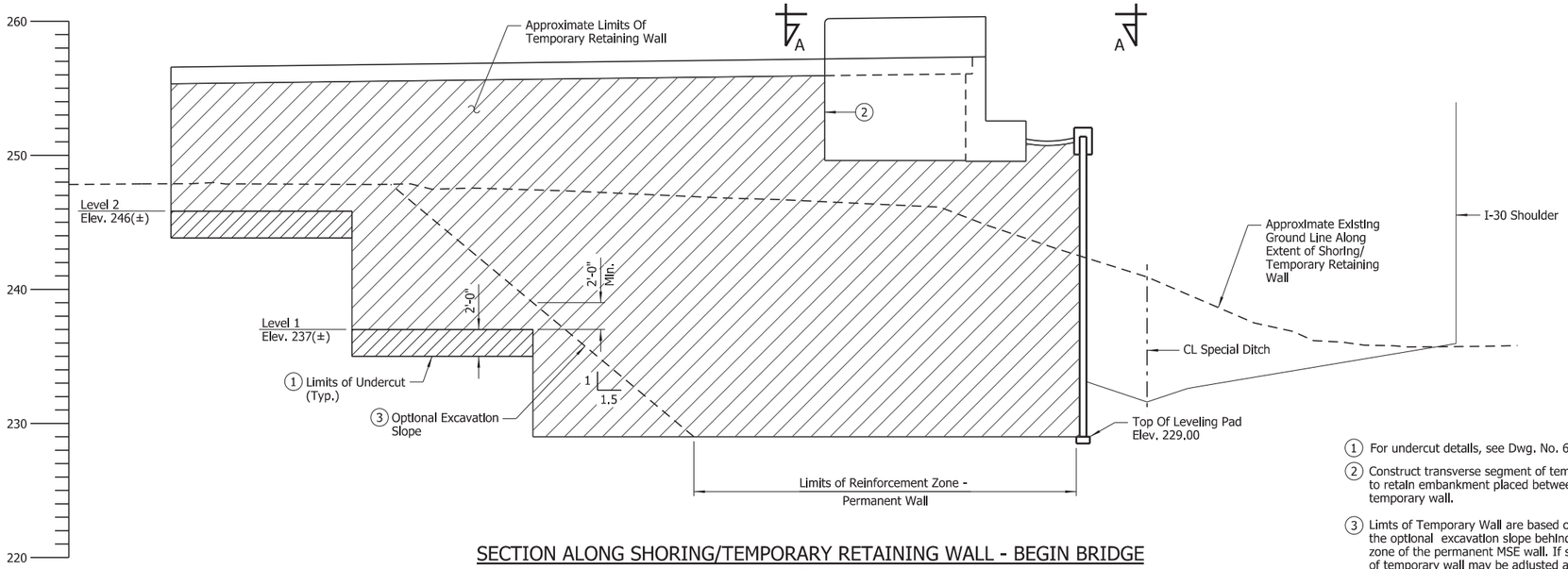

SECTION ALONG SHORING/TEMPORARY RETAINING WALL - BEGIN BRIDGE

Scale = 3/16" = 1'-0"

1. For undercut details, see Dwg. No. 65162.
2. Construct transverse segment of temporary MSE wall to retain embankment placed between wingwall and temporary wall.
3. Limts of Temporary Wall are based on Contractor utilizing the optional excavation slope behind the reinforcement zone of the permanent MSE wall. If shoring is used, limits of temporary wall may be adjusted as required.

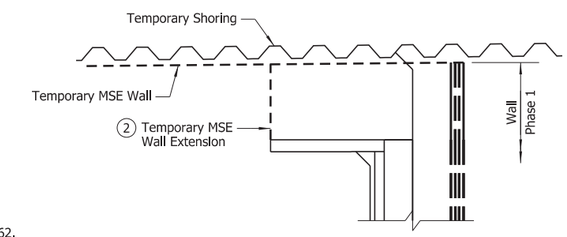

VIEW A-A

Scale = 1/8" = 1'-0"

TEMPORARY WALL BEGIN BRIDGE DESIGN PARAMETERS

Leveling Pad Elevation	Factored Bearing Resistance (KSF)	Minimum Strap Length (FT)
Elev. 229.00	6.9	0.7H
Level 1 and 2	5.4	0.7H

NOTE:
"H" shall be measured from the top of leveling pad elevation to the finished surface of the roadway.

TEMPORARY WALL END BRIDGE DESIGN PARAMETERS

Leveling Pad Elevation	Factored Bearing Resistance (KSF)	Minimum Strap Length (FT)
Elev. 229.00	6.9	0.7H
Level 1 and 2	5.4	0.7H

NOTE:
"H" shall be measured from the top of leveling pad elevation to the finished surface of the roadway.

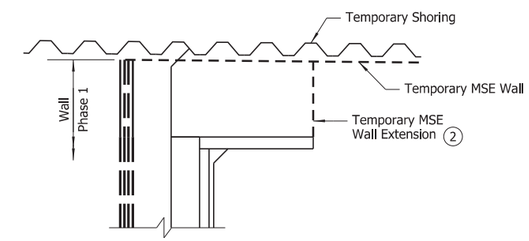

VIEW B-B

Scale = 1/8" = 1'-0"

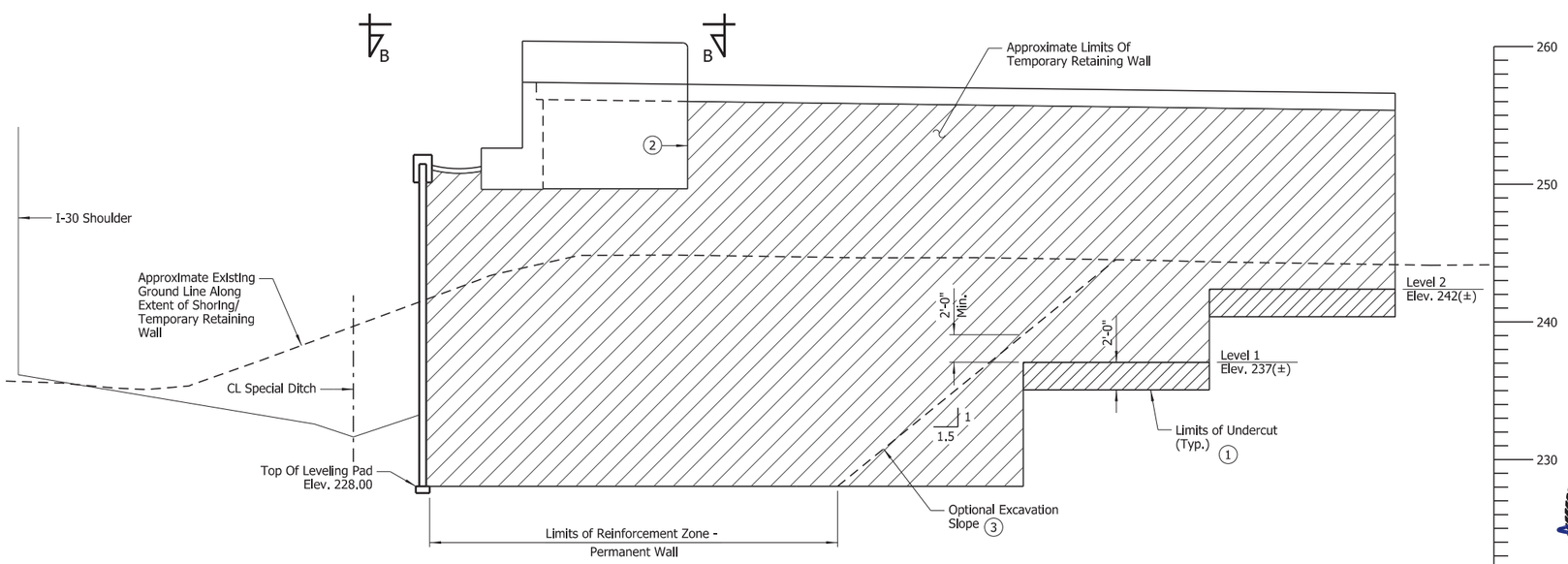

SECTION ALONG SHORING/TEMPORARY RETAINING WALL - END BRIDGE

Scale = 3/16" = 1'-0"

GENERAL NOTES - TEMPORARY WALL:

DESIGN SPECIFICATIONS: AASHTO LRFD Bridge Design Specifications (2017, 8th Edition)

SEISMIC ZONE: 1 S_{D1} = 0.08g Site Class = C

See Special Provision "TEMPORARY RETAINING WALLS" for additional information.

STATE OF ARKANSAS
LICENSED PROFESSIONAL ENGINEER
No.8017
JOHN H. RUDDELL

Digitally Signed 09/02/2022

BRIDGE ENGINEER

SHEET 6 OF 7
DETAILS OF RETAINING WALLS

ROUTE SEC.

ARKANSAS STATE HIGHWAY COMMISSION

LITTLE ROCK, ARK.

DRAWN BY: JME DATE: APR. 2021 FILENAME: b070513_RW6.dgn
CHECKED BY: JHR DATE: JAN. 2022 SCALE: As Shown
DESIGNED BY: JME DATE: APR. 2021
BRIDGE NO. 07582 DRAWING NO. 65161

JMEdwards 9/2/2022 11:30:13 AM
WORKSPACE: ARDOT Bridge (2019)
L:\2017\17017634 - 070513 I-30 St-Apprs Hwy 51\Drawings\b070513_S206_Wall.dgn
REVISED DATE:

DATE REVISED	DATE FILMED	DATE REVISED	DATE FILMED	FED. ROAD DIST. NO.	STATE	FED. AID PROJ. NO.	SHEET NO.	TOTAL SHEETS
				6	ARK.			
				JOB NO.		070513	63	109
				07582		RETAINING WALLS		65162

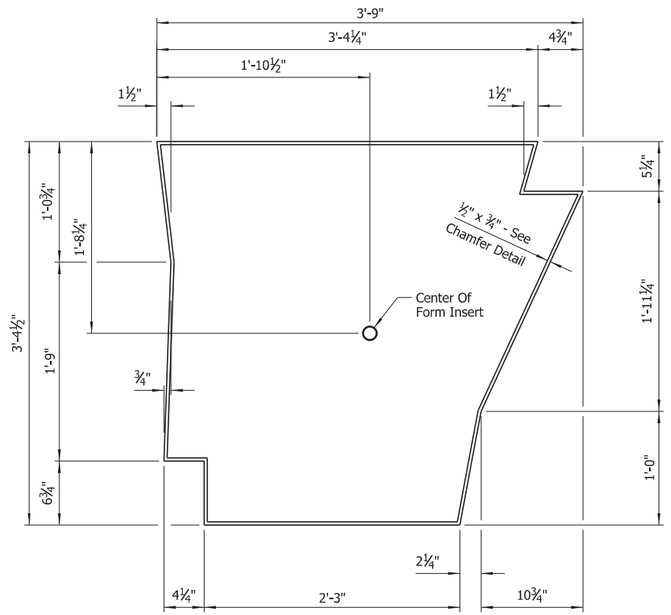

FORM INSERT DETAILS

Scale: 1½" = 1'-0"

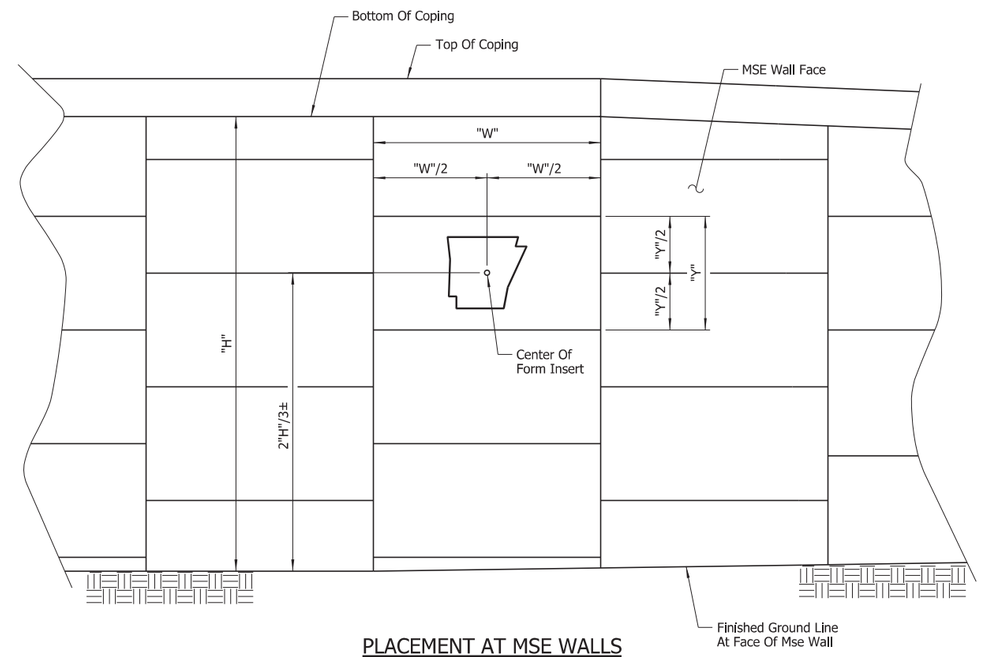

PLACEMENT AT MSE WALLS

Scale: 1½" = 1'-0"

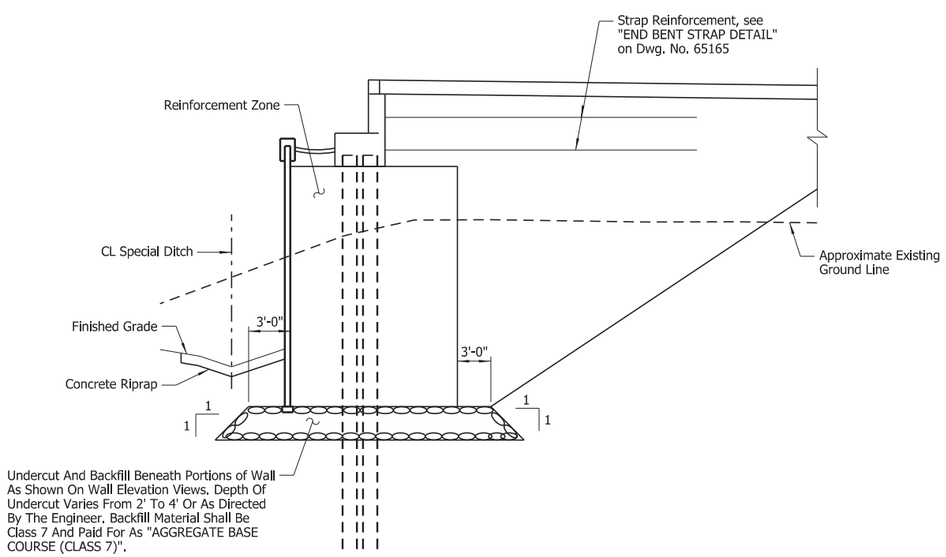

TYPICAL UNDERCUT DETAIL

No Scale

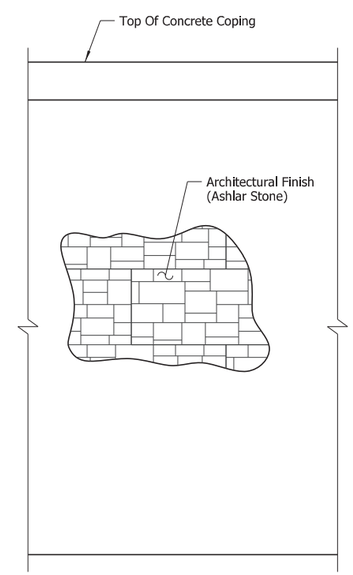

ARCHITECTURAL FINISH DETAIL

No Scale

NOTES:
See retaining wall details on Dwg. Nos. 65158 & 65159 for form insert locations.

Fabricate form insert as a one piece unit, without the use of splices, joints or glue.

Wash and clean multi-use form inserts before each use.

All work and materials for inserts shall be included in the unit price bid for the item "RETAINING WALL".

Damaged or worn form inserts shall be replaced at the Contractor's expense.

The form insert shall be approved by the Engineer before its use.

Recessed image (including chamfers) of State of Arkansas insert shall be given a Class 3 textured coating finish as specified in Special Provision "TEXTURED COATING FINISH".

The Ashlar Stone pattern shall have ridges approximately 1" deep (1½" max.) and shall generally match the pattern proposed for use on the required areas of the bridge.

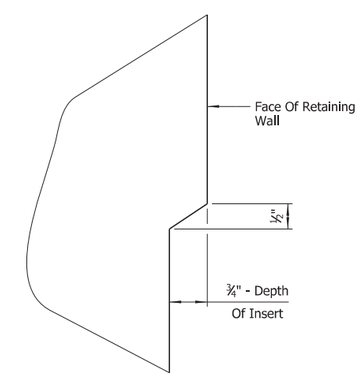

CHAMFER DETAIL

No Scale

STATE OF ARKANSAS
LICENSED PROFESSIONAL ENGINEER
No.8017
JOHN H. RUDDELL

Digitally Signed 09/02/2022

BRIDGE ENGINEER

SHEET 7 OF 7
DETAILS OF RETAINING WALLS

ROUTE SEC.

ARKANSAS STATE HIGHWAY COMMISSION

LITTLE ROCK, ARK.

DRAWN BY:	HEW	DATE:	JAN. 2021	FILENAME:	b070513_RW7.dgn
CHECKED BY:	JHR	DATE:	FEB. 2021	SCALE:	As Shown
DESIGNED BY:	JME	DATE:	JAN. 2021		

BRIDGE NO. 07582 DRAWING NO. 65162

JMEdwards 9/2/2022 11:30:13 AM
WORKSPACE: ARDOT Bridge (2019)
L:\2017\17017634 - 070513 I-30 Str-4pprs Hwy 51\Drawings\b070513_S207_Wall.dgn
REVISED DATE:

DATE REVISED	DATE FILMED	DATE REVISED	DATE FILMED	FED. ROAD DIST. NO.	STATE	FED. AID PROJ. NO.	SHEET NO.	TOTAL SHEETS
				6	ARK.			
				JOB NO.		070513	64	109
				(1) 07582		END BENTS		65163

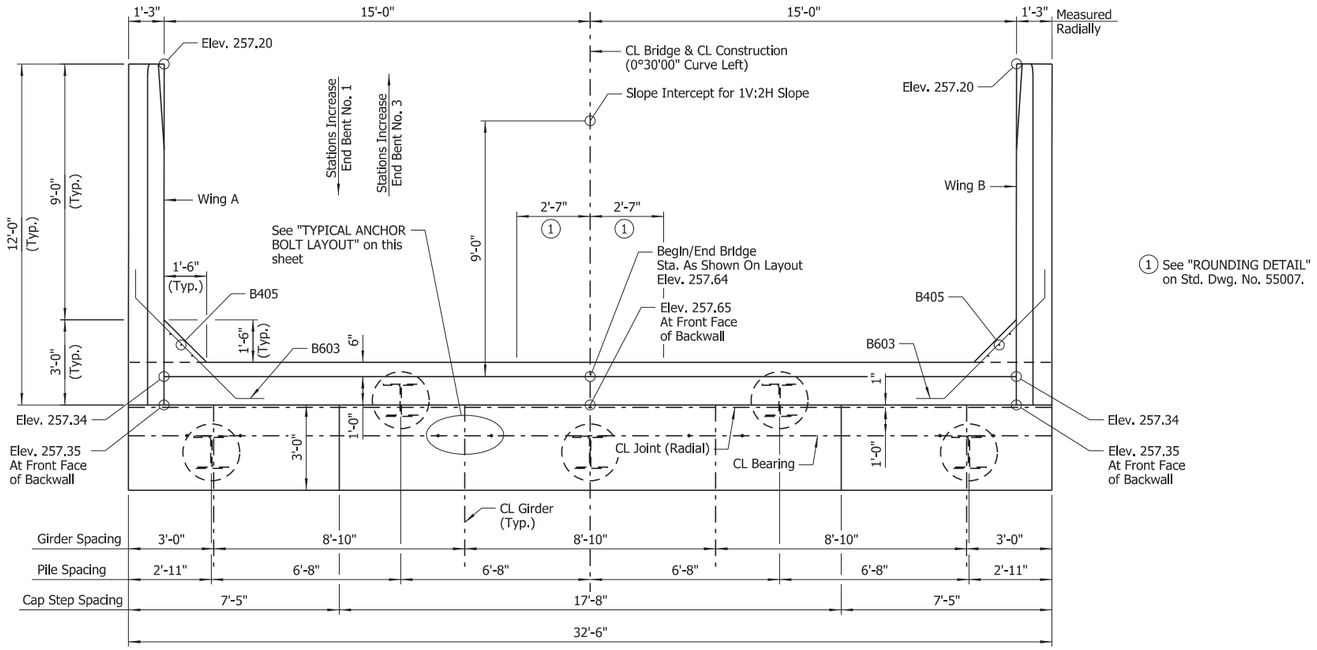

(1) See "ROUNDING DETAIL" on Std. Dwg. No. 55007.

PLAN

Scale: ⅜" = 1'-0"

GENERAL NOTES

For "STANDARD GENERAL NOTES", see Std. Dwg. No. 55006.

Structural steel in end bents shall be ASTM A709, Gr. 50 and shall be paid for as "STRUCTURAL STEEL IN PLATE GIRDER SPANS (ASTM A709, GR. 50)".

For additional information, see LAYOUT on Dwg. No. 65152.

Class 2 Protective Surface Treatment shall be applied to the roadway face and top of bridge traffic rail and top of backwall. Class 3 textured coating finish shall be applied to all areas as specified in SP "TEXTURED COATING FINISH".

A portion of the traffic railing on end bent wingwalls shall receive an "Ashlar Stone Finish" in accordance with SP "ARCHITECTURAL FINISH". See "VIEW U-U", on Dwg. No. 65164.

NOTES:
CL Construction is on a 0°30'00" curve left.

All longitudinal lines are on curves concentric with CL Construction.

For details of Wing & Rail, see Dwg. No. 65164.

For "SECTION A-A" and "BAR LIST", see Dwg. No. 65165.

NOTE:
No portion of the backwall shall be poured before girders are in place. The portion of the backwall above the optional construction joint at the paving bracket shall not be placed until the adjacent deck pour has been made. Refer to the "EXPANSION DEVICE INSTALLATION AT END BENTS" note on Std. Dwg. No. 55008.

No heavy construction equipment shall be allowed within 10' of the backwall until the deck concrete placement for the adjacent span has been completed unless MSE strap reinforcing has been designed to accommodate these loads. See "END BENT STRAP DETAIL" on Dwg. No. 65165.

LEGEND

EF = Each Face

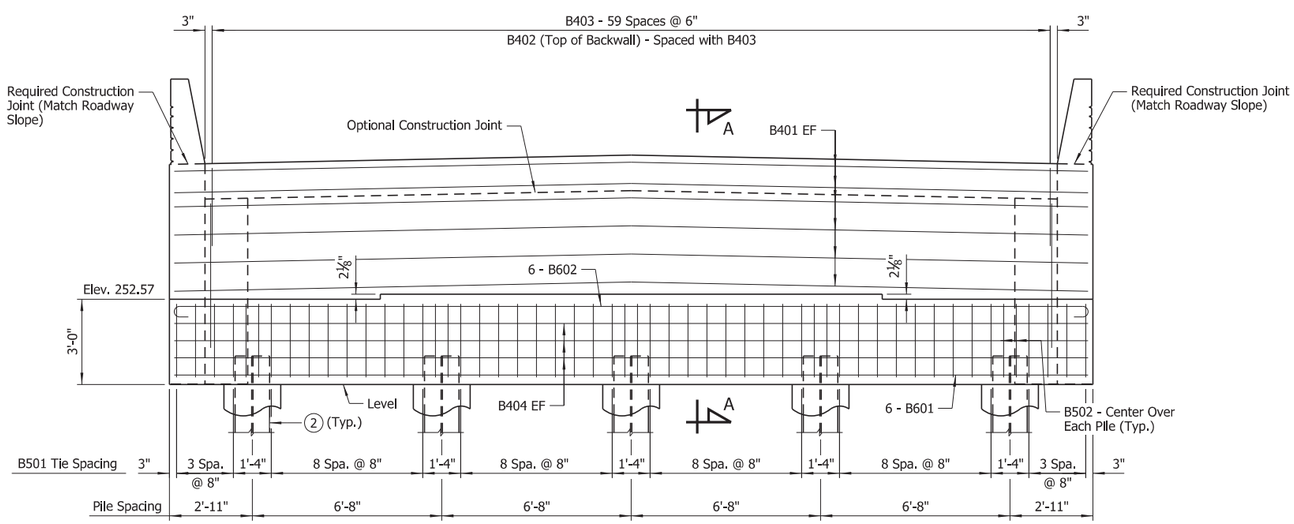

(2) HP 14x73 Piles driven through pile casings. See "FOUNDATION PLAN" on Dwg. No. 65165 for more information.

ELEVATION

(Looking Back - End Bent No. 1)
(Looking Forward - End Bent No. 3)
Scale: ⅜" = 1'-0"

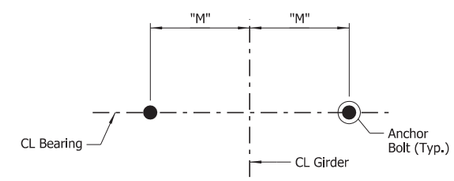

TYPICAL ANCHOR BOLT LAYOUT

No Scale

NOTE:
For Details of Elastomeric Bearings, see Dwg. No. 65169.

STATE OF ARKANSAS
LICENSED PROFESSIONAL ENGINEER
No.8017
JOHN H. RUDDELL

Digitally Signed 09/02/2022
BRIDGE ENGINEER

SHEET 1 OF 3
DETAILS OF END BENTS

ROUTE SEC.

ARKANSAS STATE HIGHWAY COMMISSION
LITTLE ROCK, ARK.

DRAWN BY: CWT DATE: MAY 2021 FILENAME: b070513_b1.dgn
CHECKED BY: JHR DATE: JAN. 2022 SCALE: As Shown
DESIGNED BY: RAK DATE: MAY 2021
BRIDGE NO. 07582 DRAWING NO. 65163

JMEdwards 9/2/2022 11:30:14 AM
WORKSPACE: ARDOT Bridge (2019)
L:\2017\17017634 - 070513 I-30 Str-Apprs Hwy 51\Drawings\b070513_S208_AB.dgn
REVISED DATE:

DATE REVISED	DATE FILMED	DATE REVISED	DATE FILMED	FED. ROAD DIST. NO.	STATE	FED. AID PROJ. NO.	SHEET NO.	TOTAL SHEETS
				6	ARK.			
				JOB NO.		070513	65	109
				07582		END BENTS		65164

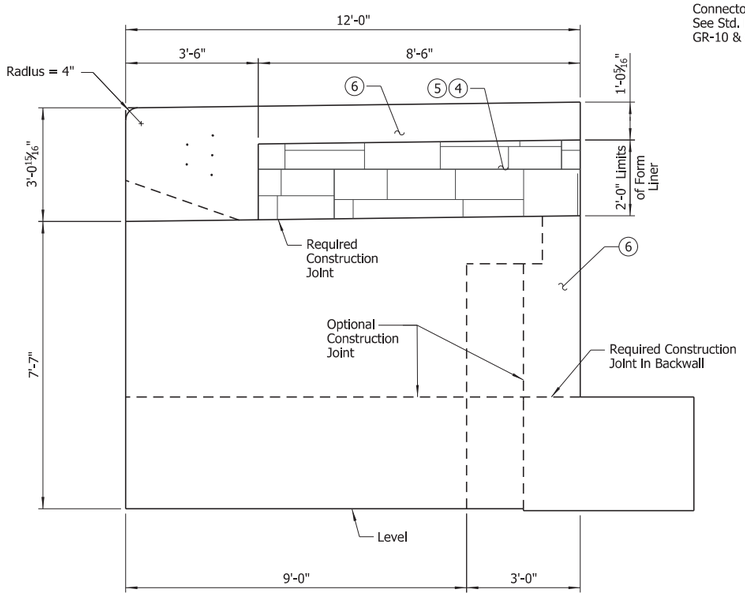

VIEW U-U

Scale: ½" = 1'-0"

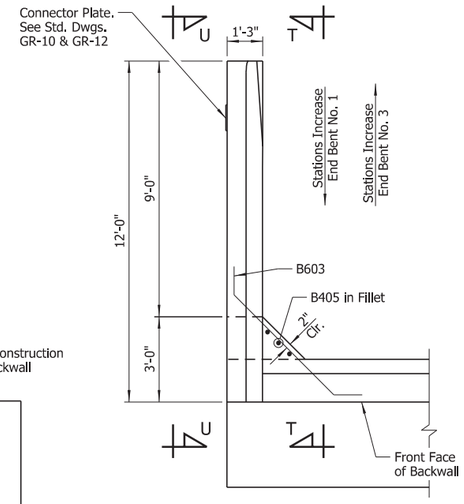

PLAN OF RAIL

Scale: ⅜" = 1'-0"

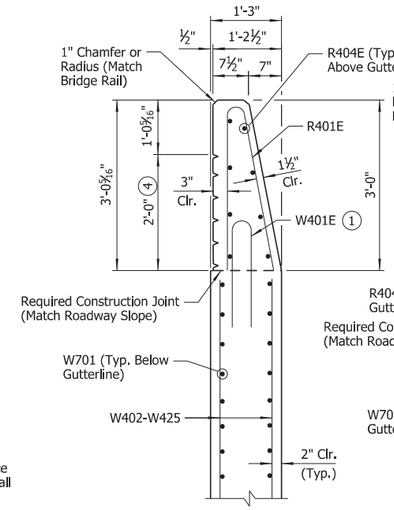

SECTION X-X

Scale: ¾" = 1'-0"

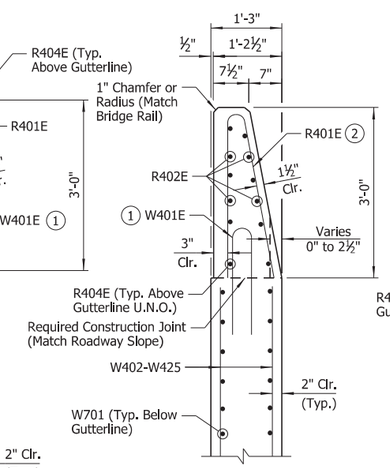

SECTION Y-Y

Scale: ¾" = 1'-0"

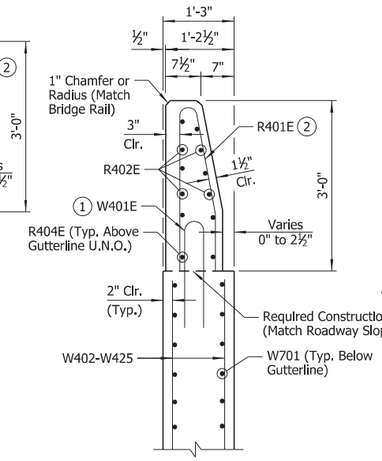

SECTION Z-Z

Scale: ¾" = 1'-0"

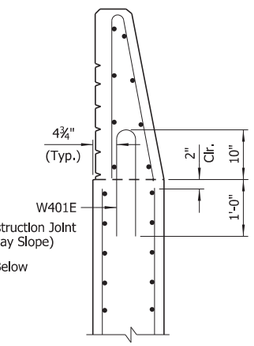

DETAIL A

Scale: ¾" = 1'-0"

LEGEND

U.N.O. = Unless Noted Otherwise
EF = Each Face

1. See "DETAIL A" for placement of Bars W401E.
2. Field bend front leg of R401E bar as required to maintain minimum 1½" front face clearance within limits of taper.
3. Place inside R401E bars positioned with 2" end cover as shown.
4. "Ashlar Stone" Pattern Form Liner, See Special Provision "ARCHITECTURAL FINISH".
5. Class 3 Textured Coating Finish (Color = Brown, Color Chip 30219)
6. Class 3 Textured Coating Finish (Color = Brown, Color Chip 33522)

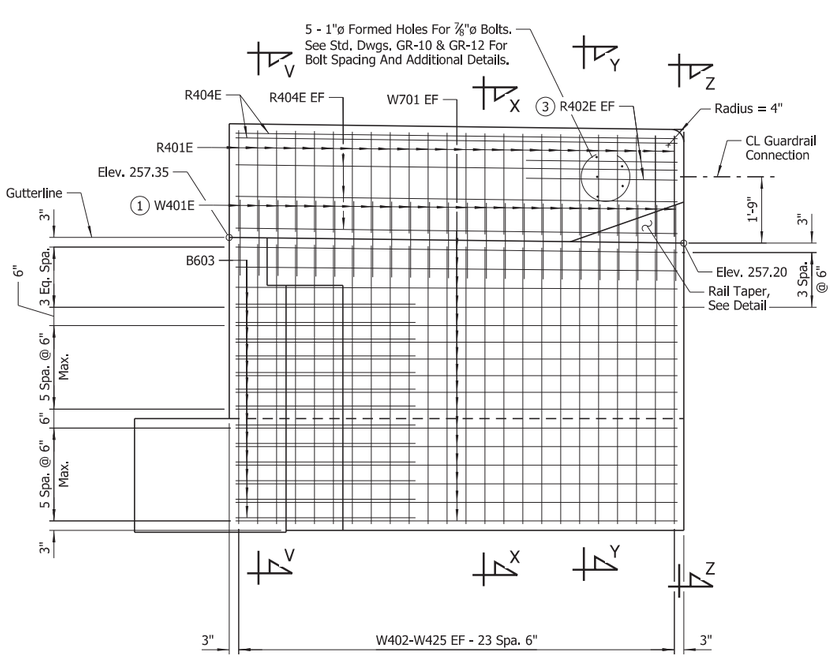

SECTION T-T

Scale: ½" = 1'-0"

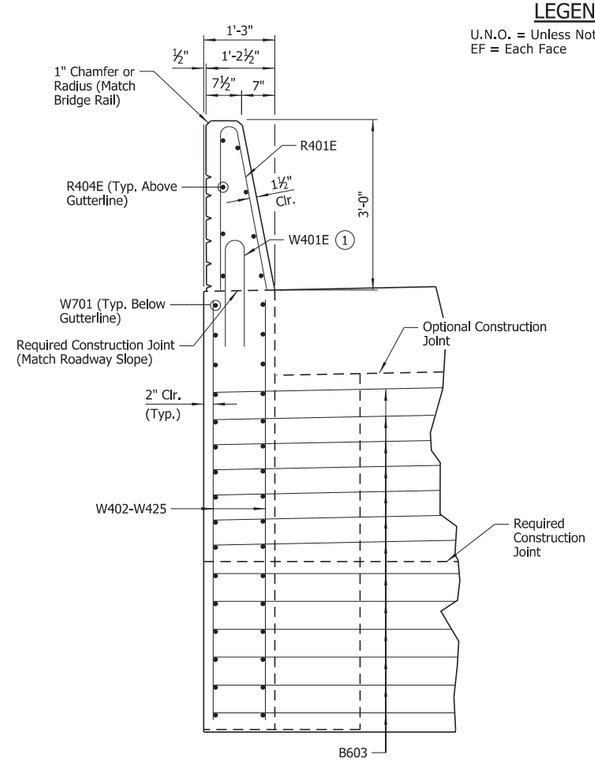

SECTION V-V

Scale: ¾" = 1'-0"

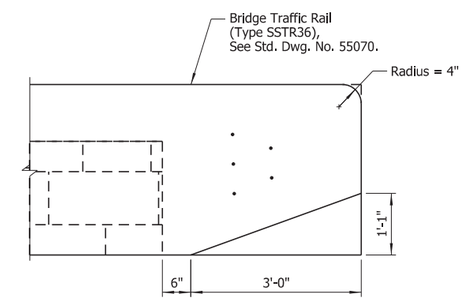

RAIL TAPER

Scale: ¾" = 1'-0"

NOTES:
Form liner shall be a max. depth of 1½" to provide a min. clearance of 1½" traffic rail reinforcing.

See Special Provision "TEXTURED COATING FINISH" for additional information regarding Class 3 Textured Coating Finish.

STATE OF ARKANSAS
LICENSED PROFESSIONAL ENGINEER
No.8017
JOHN H. RUDDELL

Digitally Signed 09/02/2022
BRIDGE ENGINEER

SHEET 2 OF 3
DETAILS OF END BENTS

ROUTE SEC.

ARKANSAS STATE HIGHWAY COMMISSION

LITTLE ROCK, ARK.

DRAWN BY: CWT DATE: MAY 2021 FILENAME: b070513_b2.dgn
CHECKED BY: JHR DATE: JAN. 2022 SCALE: As Shown
DESIGNED BY: RAK DATE: MAY 2021
BRIDGE NO. 07582 DRAWING NO. 65164

JMEdwards 9/2/2022 11:30:15 AM
WORKSPACE: ARDOT Bridge (2019)
L:\2017\17017634 - 070513 T-30 St-Appro Hwy 51\Drawings\b070513_S209_AB.dgn
REVISED DATE:

DATE REVISED	DATE FILMED	DATE REVISED	DATE FILMED	FED. ROAD DIST. NO.	STATE	FED. AID PROJ. NO.	SHEET NO.	TOTAL SHEETS
				6	ARK.			
				JOB NO.		070513	66	109
				(1) 07582		END BENTS		65165

BAR LIST (PER END BENT)

MARK	NO. REQ'D	LENGTH	"A"	"B"	P.D.
B401	12	32'-2"			Str.
B402	60	6'-0"	8"	2'-9"	2"
B403	60	11'-2"	1'-2"	5'-1"	2"
B404	6	32'-2"			Str.
B405	6	6'-2"			Str.
B501	44	14'-0"			2½"
B502	10	9'-2"	4'-2"	2'-7"	2½"
B601	6	32'-2"			Str.
B602	6	33'-6"			4½"
B603	26	7'-6"			4½"
R401E	48	5'-11"			2½"
R402E	8	5'-6"			Str.
R404E	16	11'-8"			Str.
W401E	48	3'-11"			3¾"
W402 To W425	4 Each	7'-3" To 7'-5"			Str.
W701	64	11'-8"			Str.

BAR BENDING DIAGRAMS

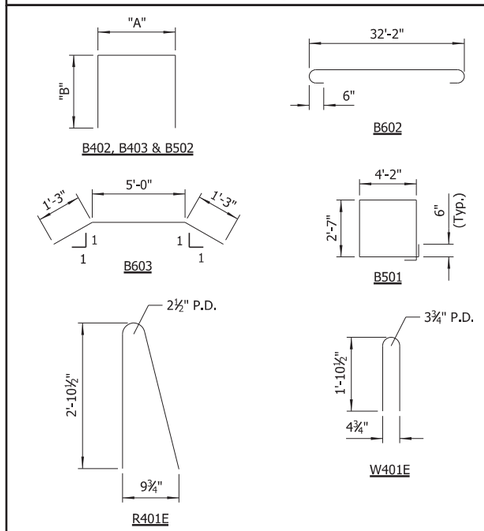

NOTE:
Dimensions of bars are out-to-out.

Bars designated with "E" suffix shall be epoxy coated.

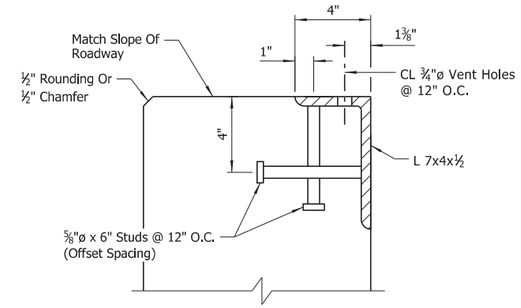

END BENT WALL ARMOR DETAIL

No Scale

NOTES:
Transverse spacing between vertical anchor studs and vent holes shall be 6".

Concrete shall be hand packed under joint armor.

Special care shall taken to properly and thoroughly consolidate the concrete in the vicinity of the expansion joint device in the backwall, see Subsection 802.09(a)(3).

The profile of the end bent wall armor shall be established based on the vertical curve in conjunction with the skew angle as shown on the layout.

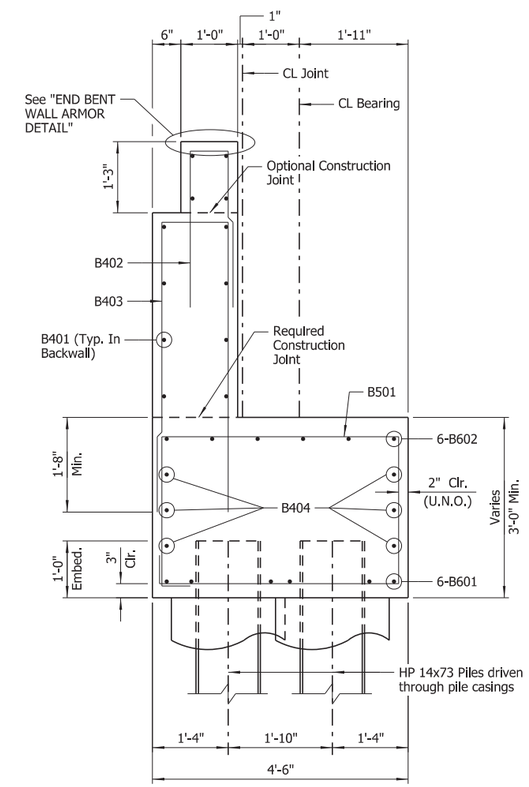

SECTION A-A

Scale: ¾" = 1'-0"

MSE wall supplier shall design and furnish attachments for End Bents. This work and materials are considered incidental to the item "RETAINING WALLS" and will not be paid for directly.

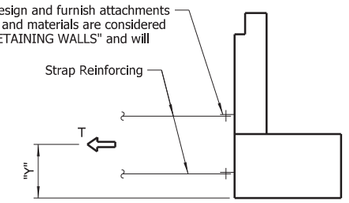

END BENT STRAP DETAIL

No Scale

T = Resultant Force required to be resisted by strap reinforcing.

Y = Centroid of strap reinforcing.

LIMIT STATE	(1) T	"y"
	Kips/Ft	Ft
Service	2.4	2.67
Strength	3.1	2.67

(1) The provided loads do not include any additional loadings due to heavy construction equipment such as cranes. If the Contractor anticipates bringing heavy construction equipment within 10' of the backwall, they shall coordinate with the MSE wall supplier to design strap reinforcing for the anticipated loadings. Tolerable horizontal backwall movement for all loading combinations is ½" at the Service Limit State. Design computations shall accompany the wall design submittal for review by the Engineer. See Special Provision "RETAINING WALLS" for additional information.

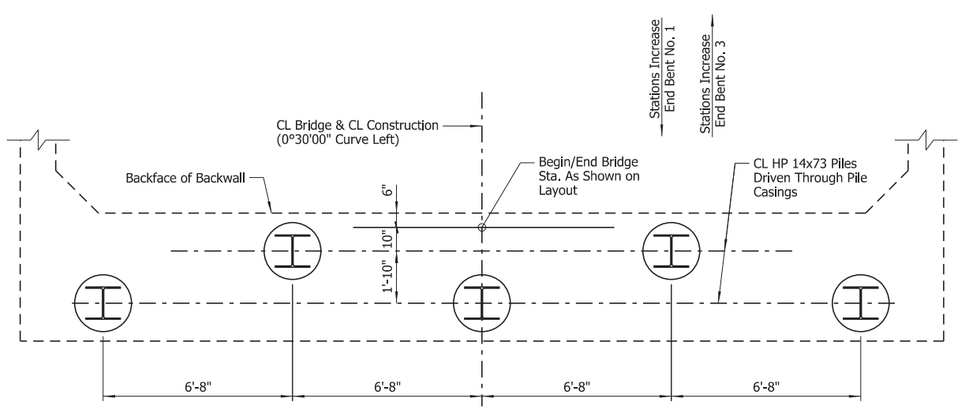

FOUNDATION PLAN

Scale: ⅜" = 1'-0"

LEGEND

U.N.O. = Unless Noted Otherwise

STATE OF ARKANSAS
LICENSED PROFESSIONAL ENGINEER
No.8017
JOHN H. RUDDELL

Digitally Signed 09/02/2022

BRIDGE ENGINEER

SHEET 3 OF 3
DETAILS OF END BENTS

ROUTE SEC.

ARKANSAS STATE HIGHWAY COMMISSION

LITTLE ROCK, ARK.

DRAWN BY: CWT DATE: MAY 2021 FILENAME: b070513_b3.dgn
CHECKED BY: JHR DATE: JAN. 2022 SCALE: As Shown
DESIGNED BY: RAK DATE: MAY 2021
BRIDGE NO. 07582 DRAWING NO. 65165

JNEdwards 9/2/2022 11:30:15 AM
WORKSPACE: ARDOT Bridge (2019)
L:\2017\1701763\4 - 070513 T-30 Str-Approx Hwy 51\Drawings\b070513_S210_AB.dgn
REVISED DATE:

DATE REVISED	DATE FILMED	DATE REVISED	DATE FILMED	FED. ROAD DIST. NO.	STATE	FED. AID PROJ. NO.	SHEET NO.	TOTAL SHEETS
				6	ARK.			
				JOB NO.		070513	67	109
				1	07582	INT. BENTS		65166

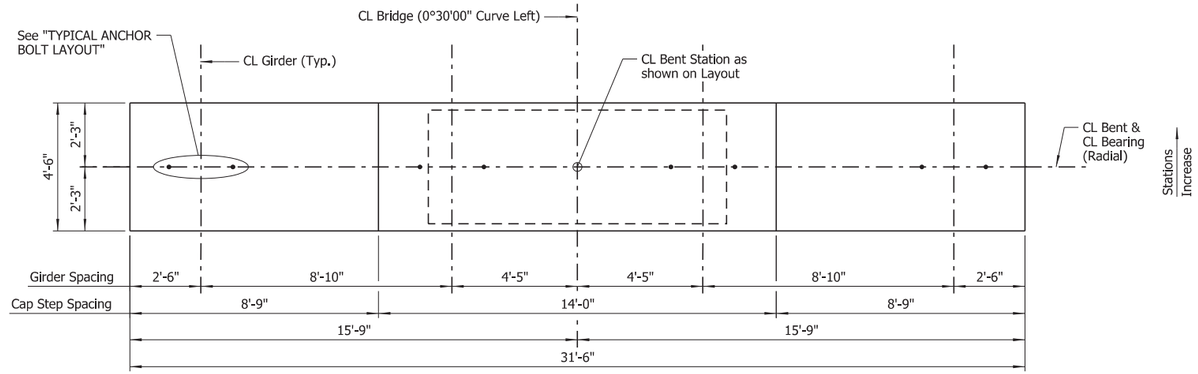

PLAN

Scale: ⅜" = 1'-0"

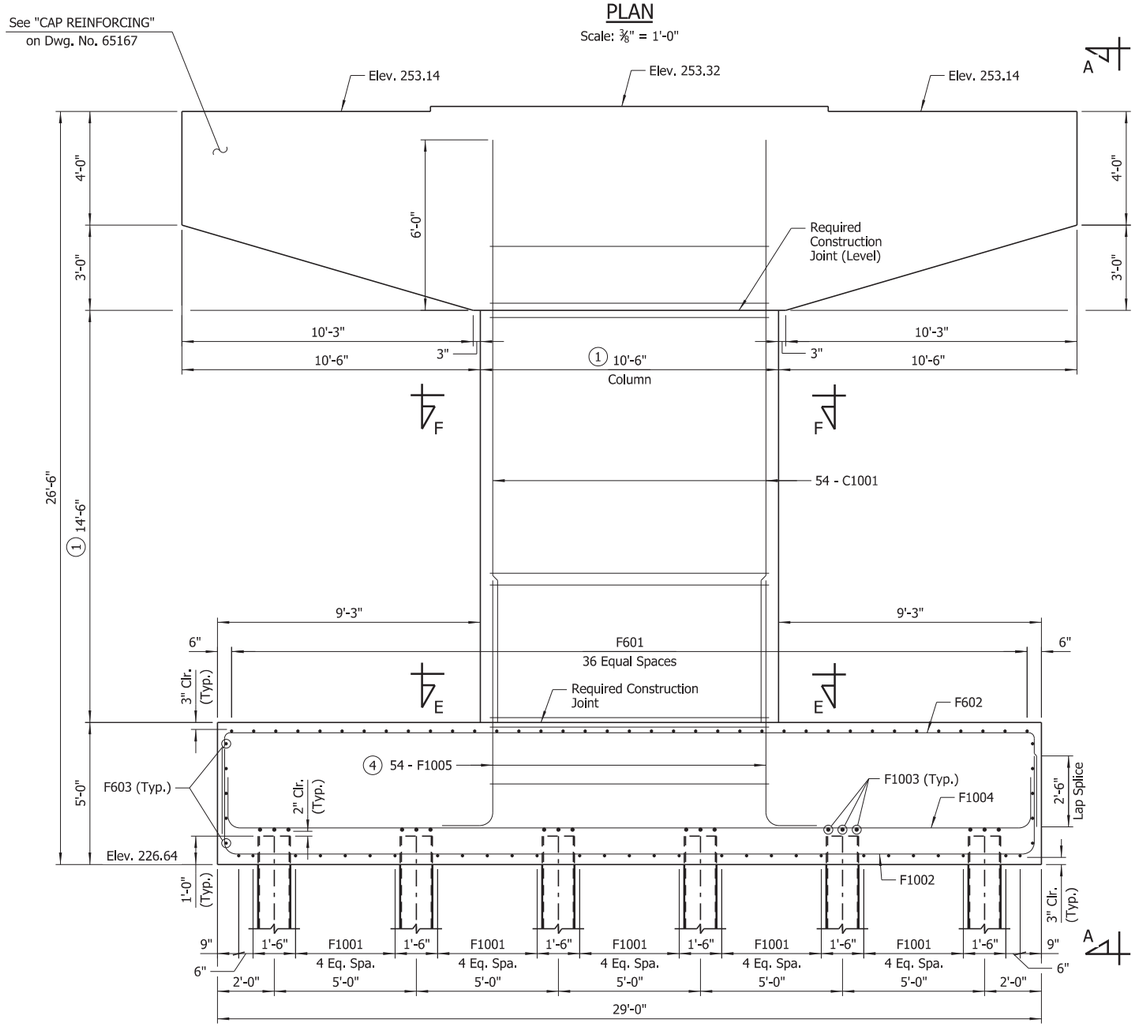

ELEVATION

(Looking Ahead)
Scale: ⅜" = 1'-0"

NOTES:
For "STANDARD GENERAL NOTES", see Std. Dwg. No. 55006.

Ashlar Stone Finish shall be applied to all surfaces of the column. For more information, see SP "ARCHITECTURAL FINISH".

For "CAP REINFORCING", "FOOTING PLAN", "BAR LIST" and "BAR BENDING DIAGRAMS", see Dwg. No. 65167.

Class 3 Textured Coating Finish shall be applied to all areas as specified in SP "TEXTURED COATING FINISH".

For "SECTION E-E" & "SECTION F-F", see Dwg. No. 65168.

For additional information, see "LAYOUT" on Dwg. No. 65152.

1. "Ashlar Stone" pattern on column surfaces (form liner shall be a max. depth of 1½" to provide a min. clear cover of 2½" to C501 & C504 ties.) See "BENT AESTHETICS" on Dwg. No. 65168.
2. C501, 10 - C502 & 4 - C503 6 Spa. @ 4"
3. C501, 10 - C502 & 4 - C503 14 Spa. @ 4"
4. F1005 bars to rest on footing mat of reinforcing steel as shown

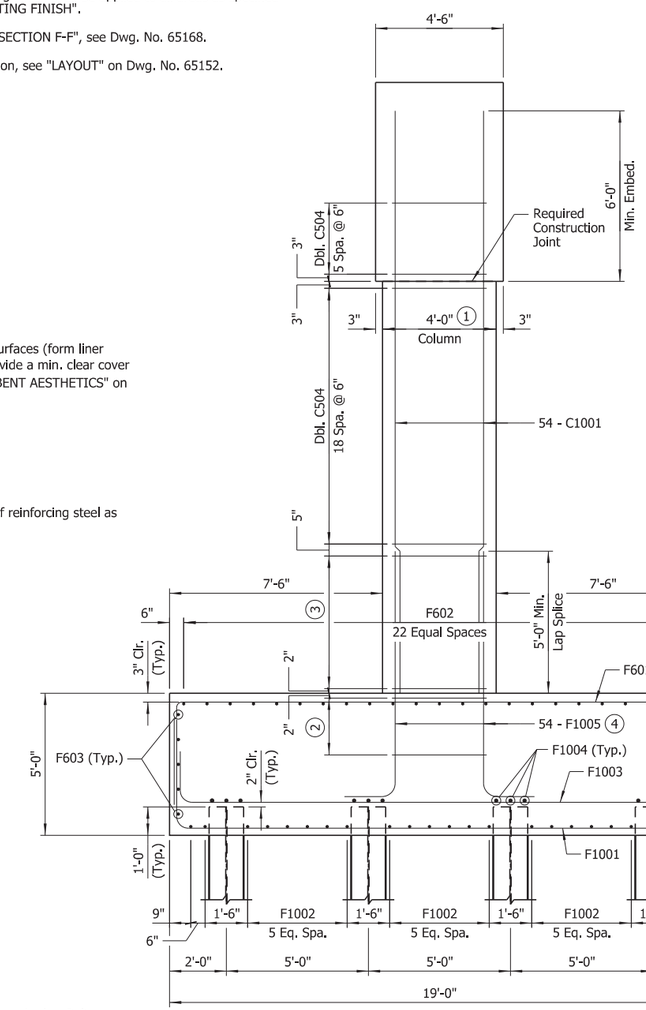

VIEW A-A

Scale: ⅜" = 1'-0"

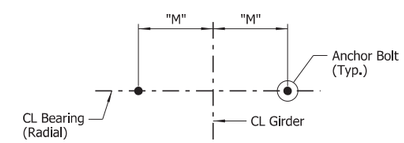

TYPICAL ANCHOR BOLT LAYOUT

No Scale

NOTE:
For details of Elastomeric Bearings, see Dwg. No. 65169.

STATE OF ARKANSAS
LICENSED PROFESSIONAL ENGINEER
No.8017
JOHN H. RUDDELL

Digitally Signed 09/02/2022

BRIDGE ENGINEER

SHEET 1 OF 3
DETAILS OF INTERMEDIATE BENT

ROUTE SEC.

ARKANSAS STATE HIGHWAY COMMISSION

LITTLE ROCK, ARK.

DRAWN BY: JJB DATE: MAY. 2021 FILENAME: b070513_b4.dgn
CHECKED BY: JHR DATE: NOV. 2021 SCALE: As Shown
DESIGNED BY: JJB DATE: MAY. 2021
BRIDGE NO. 07582 DRAWING NO. 65166

JMEdwards 9/2/2022 12:12:45 PM
WORKSPACE: ARDOT Bridge (2019)
L:\2017\17017634 - 070513 I-30 Str-Apprs Hwy 51\Drawings\b070513_S211_BE.dgn
REVISED DATE:

DATE REVISED	DATE FILMED	DATE REVISED	DATE FILMED	FED. ROAD DIST. NO.	STATE	FED. AID PROJ. NO.	SHEET NO.	TOTAL SHEETS
				6	ARK.			
				JOB NO.		070513	68	109
				07582		INT. BENTS		65167

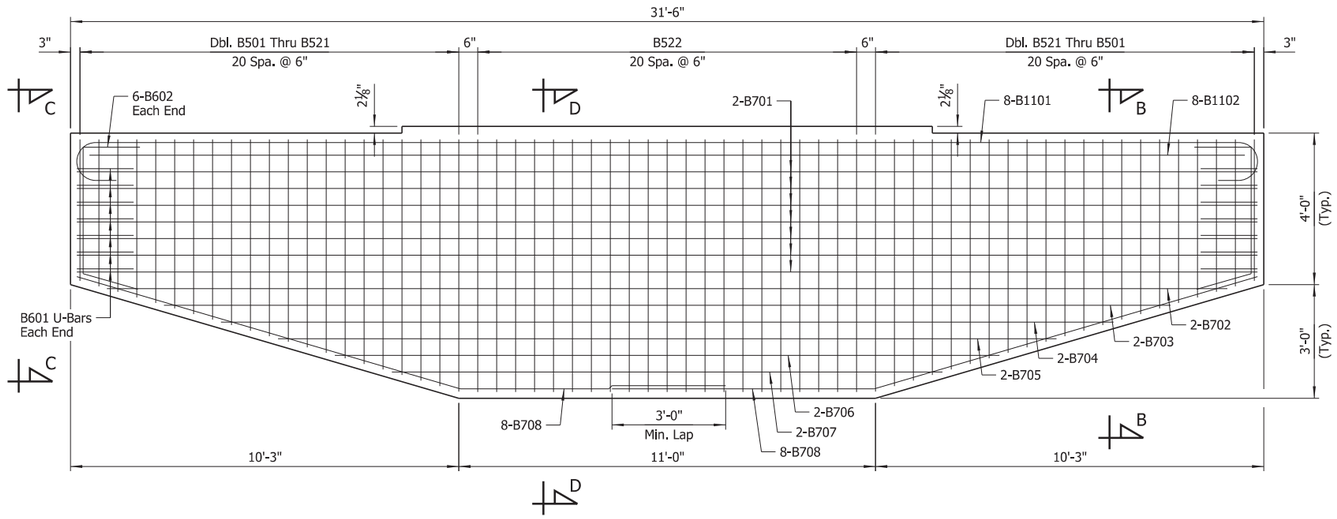

CAP REINFORCING

Scale: ½" = 1'-0"

NOTE:
Dbl. B501 bars not shown for clarity.

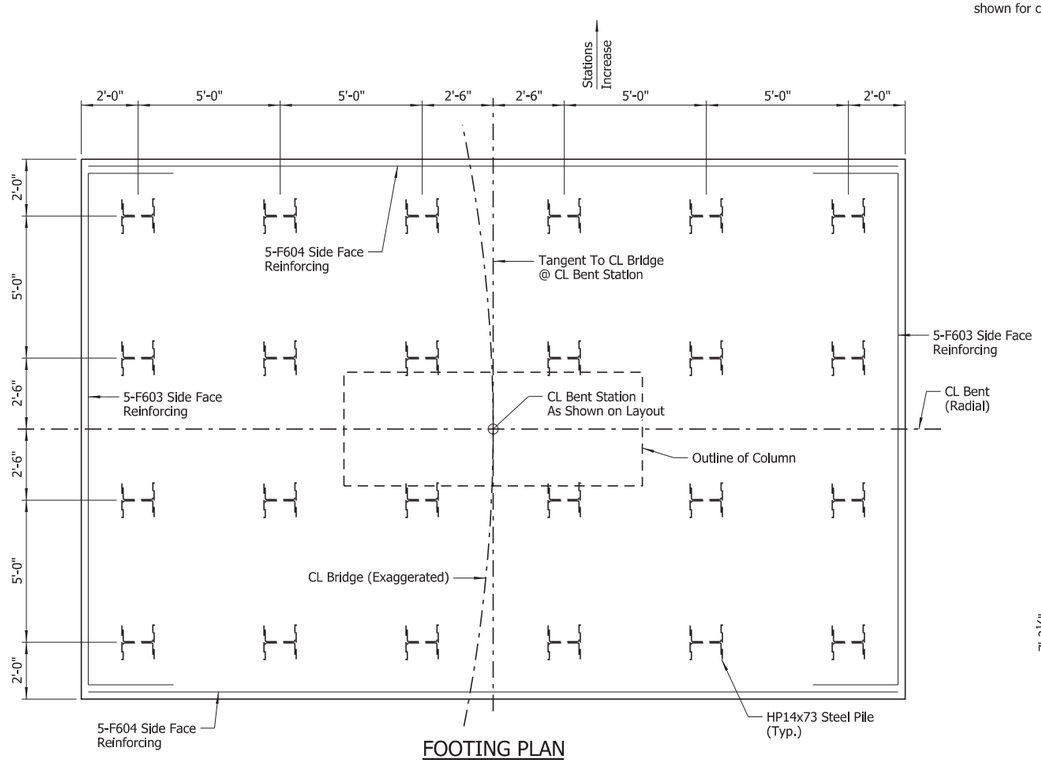

FOOTING PLAN

Scale: ⅜" = 1'-0"

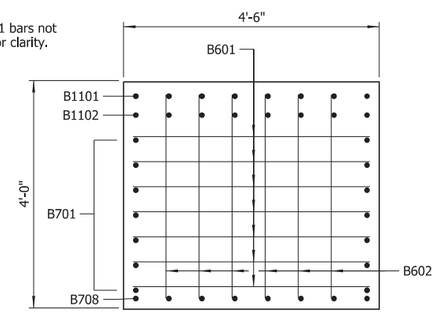

VIEW C-C

Scale: ¾" = 1'-0"

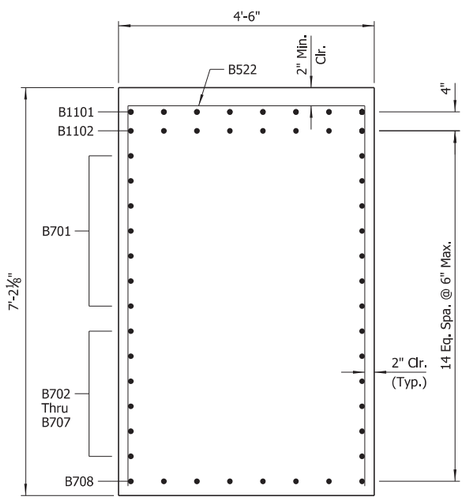

SECTION D-D

Scale: ¾" = 1'-0"

BAR LIST

MARK	NO. REQ'D	LENGTH	"A"	"B"	P.D.
B501 To B521	4 Ea.	14'-1" To 19'-11"	3'-8½" To 6'-7½"		2½"
B522	21	17'-3"	4'-2"	6'-8"	2½"
B601	14	8'-8"	4'-0"	2'-6"	4½"
B602	12	8'-4"			4½"
B701	14	31'-2"			Str.
B702 To B707	2 Ea.	29'-7" To 14'-6"			Str.
B708	16	17'-6"			5¼"
B1101	8	34'-2"			11¼"
B1102	8	30'-6"			Str.
C501	22	27'-0"	9'-10"		3¾"
C502	220	4'-7"			3¾"
C503	88	6'-10"			3¾"
C504	50	19'-8"	6'-2"		3¾"
C1001	54	20'-6"			Str.
F601	37	25'-3"	18'-6"	3'-6"	4½"
F602	23	35'-3"	28'-6"	3'-6"	4½"
F603	10	24'-0"	18'-3"	3'-0"	4½"
F604	10	28'-3"			Str.
F1001	29	24'-11"	18'-6"	3'-6"	10"
F1002	22	34'-11"	28'-6"	3'-6"	10"
F1003	18	21'-2"	18'-2"	1'-9½"	10"
F1004	12	31'-2"	28'-2"	1'-9½"	10"
F1005	54	11'-2"			10"

BAR BENDING DIAGRAMS

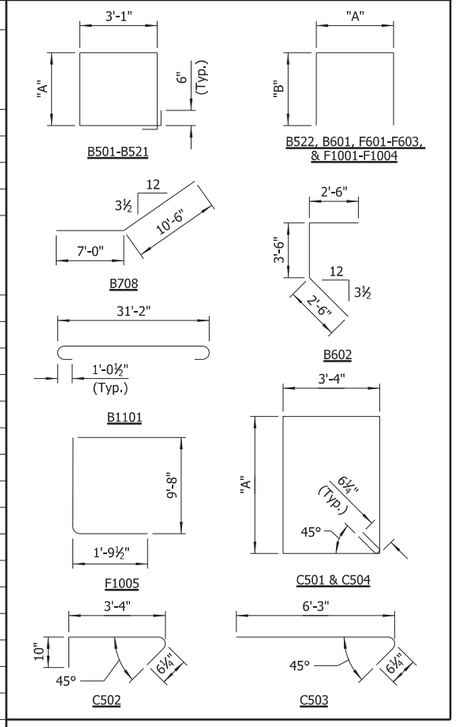

NOTE:
Dimensions of bars are out-to-out.

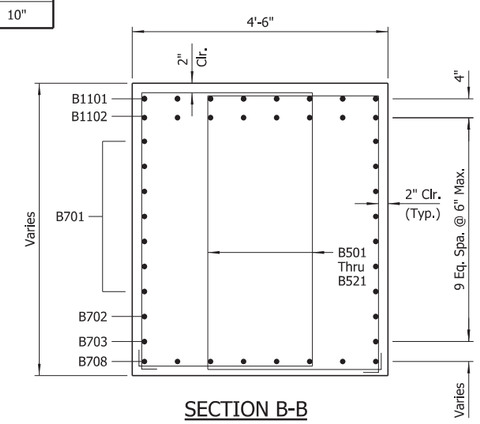

SECTION B-B

Scale: ¾" = 1'-0"

STATE OF ARKANSAS
LICENSED PROFESSIONAL ENGINEER
No.8017
JOHN H. RUDDELL

Digitally Signed 09/02/2022

BRIDGE ENGINEER

SHEET 2 OF 3
DETAILS OF INTERMEDIATE BENT

ROUTE SEC.

ARKANSAS STATE HIGHWAY COMMISSION

LITTLE ROCK, ARK.

DRAWN BY:	JJB	DATE:	MAY 2021	FILENAME:	b070513_b5.dgn
CHECKED BY:	JHR	DATE:	NOV. 2021	SCALE:	As Shown
DESIGNED BY:	JJB	DATE:	MAY 2021		

BRIDGE NO. 07582 DRAWING NO. 65167

JMEdwards 9/2/2022 11:30:16 AM
WORKSPACE: ARDOT Bridge (2019)
L:\2017\17017634 - 070513 T-30 St-Appro Hwy 51\Drawings\b070513_S212_BE.dgn
REVISED DATE:

DATE REVISED	DATE FILMED	DATE REVISED	DATE FILMED	FED. ROAD DIST. NO.	STATE	FED. AID PROJ. NO.	SHEET NO.	TOTAL SHEETS
				6	ARK.			
				JOB NO.		070513	69	109
				(I) 07582		INT. BENTS		65168

(1) "Ashlar Stone" pattern on column surfaces (form liner shall be a max. depth of 1½" to provide a min. clear cover of 2½" to C501 ties.)

(2) Class 3 Textured Coating Finish (Color = Brown, Color Chip No. 30219)

(3) Class 3 Textured Coating Finish (Color = Brown, Color Chip No. 33522)

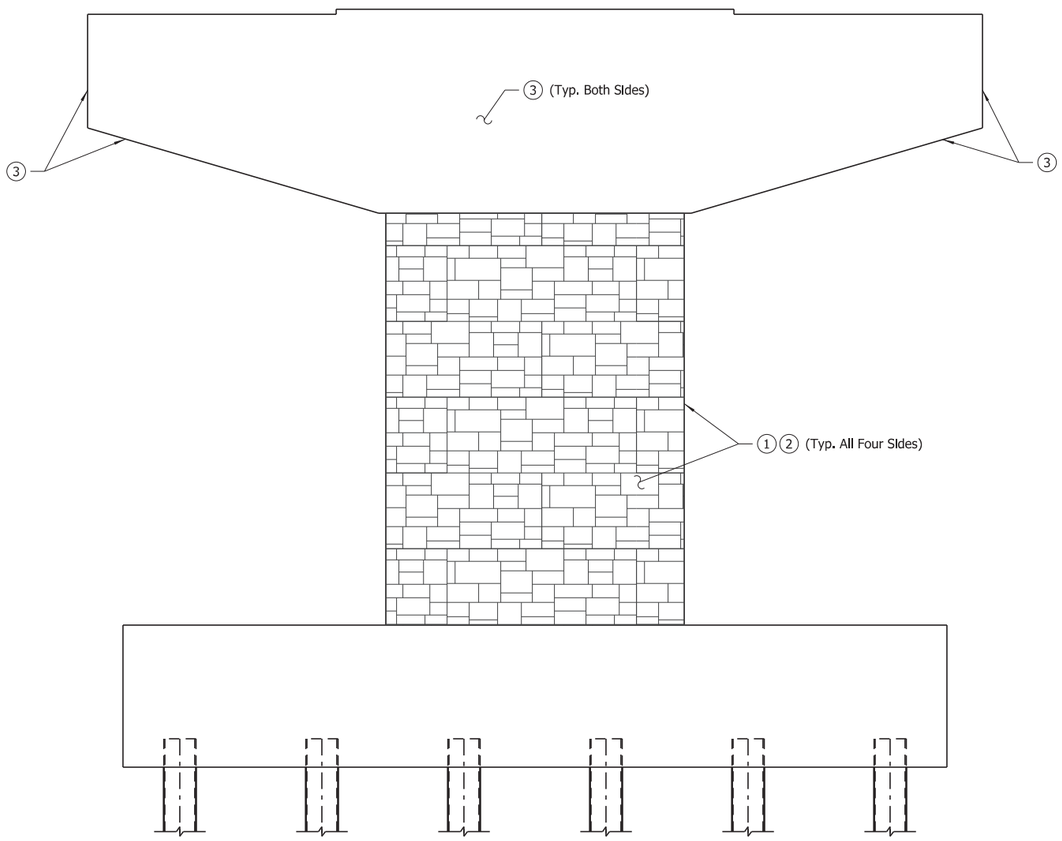

BENT AESTHETICS

(Looking Ahead)
Scale: ⅜" = 1'-0"

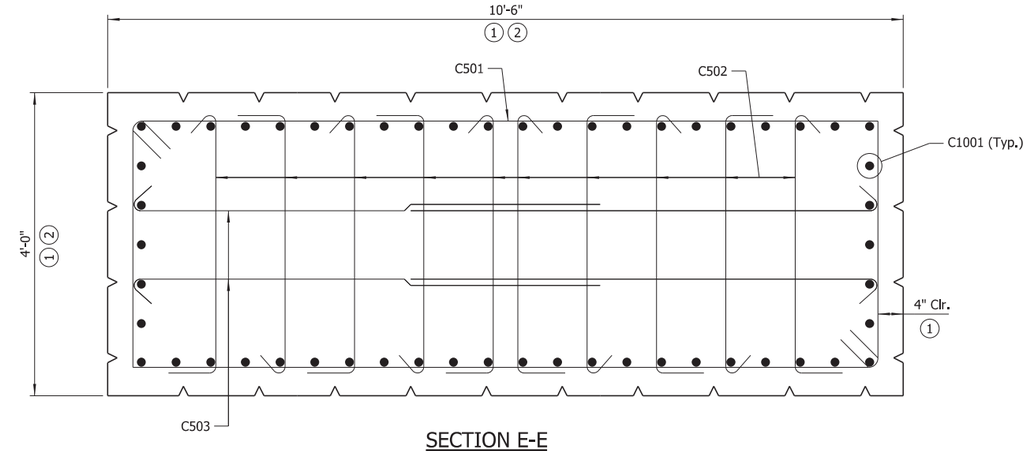

SECTION E-E

Scale: 1" = 1'-0"

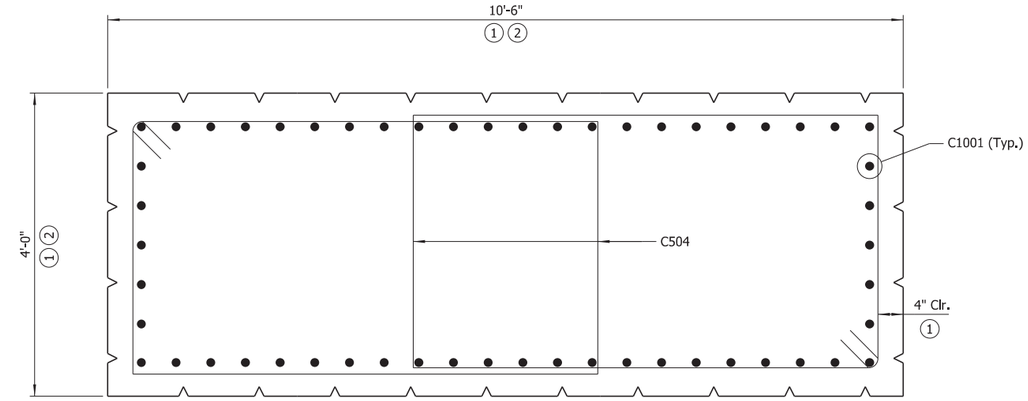

SECTION F-F

Scale: 1" = 1'-0"

STATE OF ARKANSAS
LICENSED PROFESSIONAL ENGINEER
No.8017
JOHN H. RUDDELL

Digitally Signed 09/02/2022

BRIDGE ENGINEER

SHEET 3 OF 3
DETAILS OF INTERMEDIATE BENT

ROUTE SEC.

ARKANSAS STATE HIGHWAY COMMISSION

LITTLE ROCK, ARK.

DRAWN BY: CWT DATE: MAY. 2021 FILENAME: b070513_b6.dgn
CHECKED BY: JHR DATE: NOV. 2021 SCALE: As Shown
DESIGNED BY: JJB DATE: MAY. 2021

BRIDGE NO. 07582 DRAWING NO. 65168

JMEdwards 9/2/2022 11:30:17 AM
WORKSPACE: ARDOT Bridge (2019)
L:\2017\1701634 - 070513 I-30 Str-4pprs Hwy 51\Drawings\b070513_S213_BE.dgn
REVISED DATE:

DATE REVISED	DATE FILMED	DATE REVISED	DATE FILMED	FED. ROAD DIST. NO.	STATE	FED. AID PROJ. NO.	SHEET NO.	TOTAL SHEETS
				6	ARK.			
				JOB NO.		070513	70	109
				07582	ELASTOMERIC BEARINGS			65169

TABLE OF FABRICATOR VARIABLES

Location		Bearing Type	No. Of Bearings Each Bent	(3) Maximum Design Load (Kips)	G	H	Elastomeric Pad							External Load Plate								Anchor Bolt				
							A	B	N	t_i	t_e	No. & Thickness Of Steel Laminae	T	C	D	E	F	K	M	t_a	t_b	Anchor Bolt (Dia. x L)	Grade	Pipe Sleeve Size (Dia. x L)	Sheet Metal Sleeve Size (Dia. x L)	Steel Washer Size (O.D.)
Bent No.	Girder No.																									
1	All	Exp.	4	137	7 15/16"	4 15/16"	18"	10"	4	½"	¼"	5 @ 12 Ga.	3"	11"	29½"	4¼"	2⅝"	½"	11¾"	2.06"	1.94"	1.75" x 28"	55	2" x 5 7/16"	4" x 6"	3.375"
2	All	Fixed	4	371	8⅛"	4⅜"	20"	12"	3	½"	¼"	4 @ 12 Ga.	2 7/16"	13"	33½"	3¾"	3¾"	½"	13¼"	2.00"	2.00"	2.5" x 37"	55	3" x 4⅝"	4" x 12"	4.5"
3	All	Exp.	4	137	7 15/16"	4 15/16"	18"	10"	4	½"	¼"	5 @ 12 Ga.	3"	11"	29½"	4¼"	2⅝"	½"	11¾"	1.94"	2.06"	1.75" x 28"	55	2" x 5 7/16"	4" x 6"	3.375"

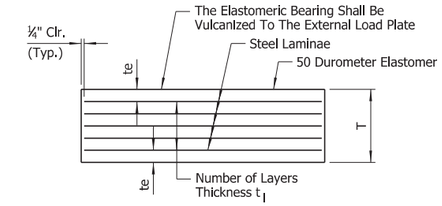

t_e = Thickness Of Elastomer Cover On Top And Bottom Of Pad
t_i = Thickness Of Elastomer Between Steel Laminae
N = Number Of Elastomer Layers Of Thickness t_i

ELASTOMERIC BEARING

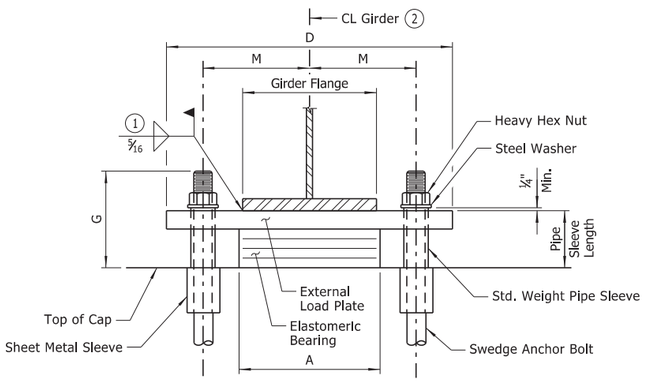

FRONT VIEW - AT BENT NOS. 1 & 3

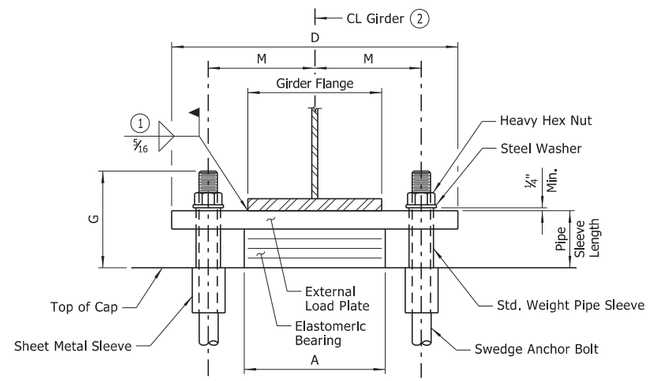

FRONT VIEW - AT BENT NO. 2

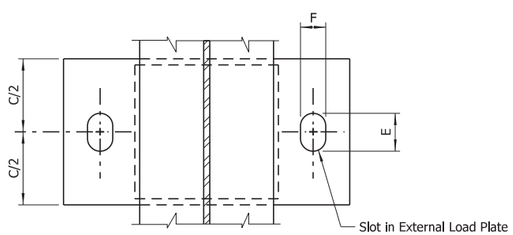

PLAN VIEW - AT BENT NOS. 1 & 3

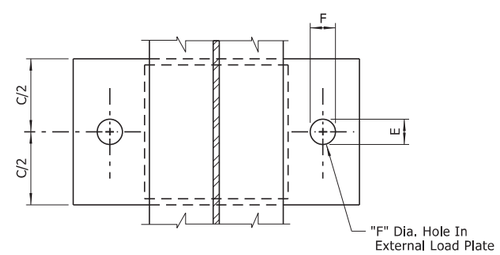

PLAN VIEW - AT BENT NO. 2

The direction of the bevel of the external load plate may not be accurately depicted with respect to Ta and Tb values shown in "TABLE OF FABRICATOR VARIABLES".

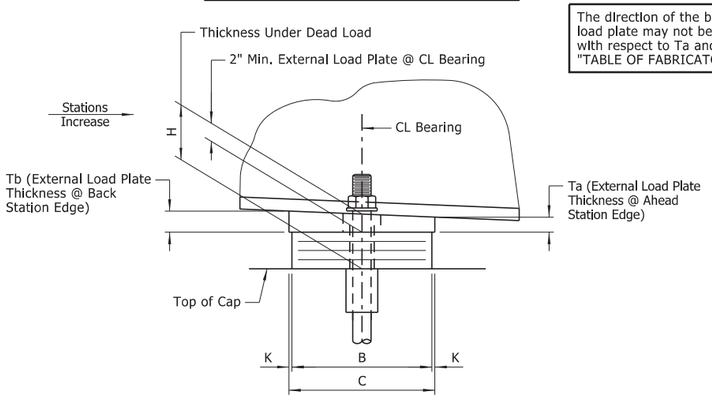

SIDE VIEW - AT BENT NOS. 1 & 3

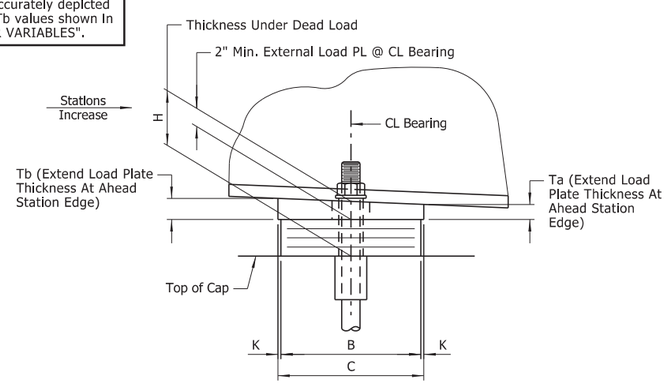

SIDE VIEW - AT BENT NO. 2

(1) Care shall be taken to ensure that the external load plate is in full and complete contact with the girder flange before welding begins. Unless otherwise approved by the Engineer, welding of the external load plate at expansion bearings to the girder will be allowed only when: 1) the approximate average air temperature during the 24 hour period immediately preceding welding is between 40°F and 80°F; and 2) the slots in the external load plate are positioned to center on the anchor bolts; and 3) no horizontal deformation of the elastomeric pad is evident. If welding at other temperatures is required, the Engineer will provide adjustment data.

(2) CL elastomeric pad shall be aligned with CL girder.

(3) Maximum Design Load = Service I Limit State

GENERAL NOTES

Elastomeric bearings shall conform to Section 808 and shall be paid for at the unit price bid for "ELASTOMERIC BEARINGS".

External load plates shall conform to ASTM A709, Grade 50. Pipe sleeves shall be ASTM A500, Grade B, and shall be galvanized to conform to AASHTO M 232, Class C or ASTM B695, Class 50.

External load plates shall be completely fabricated (including bevel, bolt holes and all shop welding) and shall be cleaned before vulcanizing to the elastomeric bearing. The surfaces in contact with the elastomeric bearing shall be cleaned in accordance with Subsection 808.03. Other surfaces shall be blast cleaned in accordance with Subsection 807.84(b) for painted steel and 807.84(e) for unpainted Grade 50W steel.

Anchor bolts, washers and nuts shall conform to Subsection 807.07. The anchor bolt grade of steel shall be as specified in the "TABLE OF FABRICATOR VARIABLES". Indentations shall be circular with rounded bottoms and staggered as shown in the details.

Pipe sleeves, anchor bolts, washers and nuts shall be paid for at the unit price bid for "STRUCTURAL STEEL IN PLATE GIRDER SPANS (A709, GR. 50)". External load plates will not be measured or paid for separately but will be considered subsidiary to the unit price bid for "ELASTOMERIC BEARINGS".

Bearings shall be seated in accordance with Subsection 808.08. This work and materials are considered subsidiary to the item "ELASTOMERIC BEARINGS" and will not be paid for directly.

Prior to erection of the girder, the Contractor shall verify the orientation of the bearings with respect to Ta and Tb.

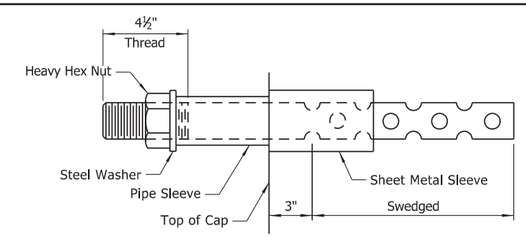

ANCHOR BOLT DETAIL

NOTES:
Anchor bolts may be cast in place or drilled and grouted into place. If anchor bolts are to be cast in place, the galvanized sheet metal sleeves will not be required.

If anchor bolts are to be drilled and grouted in place, the galvanized sheet metal sleeves shall be cast in place as shown. Sleeves shall be dry packed with styrofoam, urethane foam or approved equal prior to pouring of concrete. After pouring of the cap and prior to erection of structural steel, the dry pack shall be removed and holes for the anchor bolts shall be accurately drilled into the concrete. Bolts placed in drilled holes shall be accurately set and fixed using a QPL approved epoxy or non-shrink grout that completely fills the holes. Galvanized sheet metal sleeves shall meet the requirements of ASTM B653, CS Type B or approved equivalent, be of minimum 16 gage thickness, and be galvanized according to ASTM B695, Class 50. Sheet metal sleeves will not be paid for directly but will be considered subsidiary to the item "STRUCTURAL STEEL IN PLATE GIRDER SPANS (A709, GR. 50)".

STATE OF ARKANSAS
LICENSED PROFESSIONAL ENGINEER
No.8017
JOHN H. RUDDELL

Digitally Signed 09/02/2022
BRIDGE ENGINEER

DETAILS OF
ELASTOMERIC BEARINGS

ROUTE SEC.

ARKANSAS STATE HIGHWAY COMMISSION

LITTLE ROCK, ARK.

DRAWN BY:	HEW	DATE:	OCT. 2021	FILENAME:	b070513_e1.dgn
CHECKED BY:	JHR	DATE:	OCT. 2021	SCALE:	As Shown
DESIGNED BY:	RAK	DATE:	APR. 2021		

BRIDGE NO. 07582 DRAWING NO. 65169

JMEdwards 9/2/2022 11:30:17 AM
WORKSPACE: ARDOT Bridge (2019)
L:\2017\1701763\4 - 070513 I-30 Str-Apprs Hwy 51\Drawings\b070513_S301_BG.dgn
REVISED DATE:

DATE REVISED	DATE FILMED	DATE REVISED	DATE FILMED	FED. ROAD DIST. NO.	STATE	FED. AID PROJ. NO.	SHEET NO.	TOTAL SHEETS
				6	ARK.			
				JOB NO.		070513	71	109
				(I) 07582		200' PL GIRDER UNIT		65170

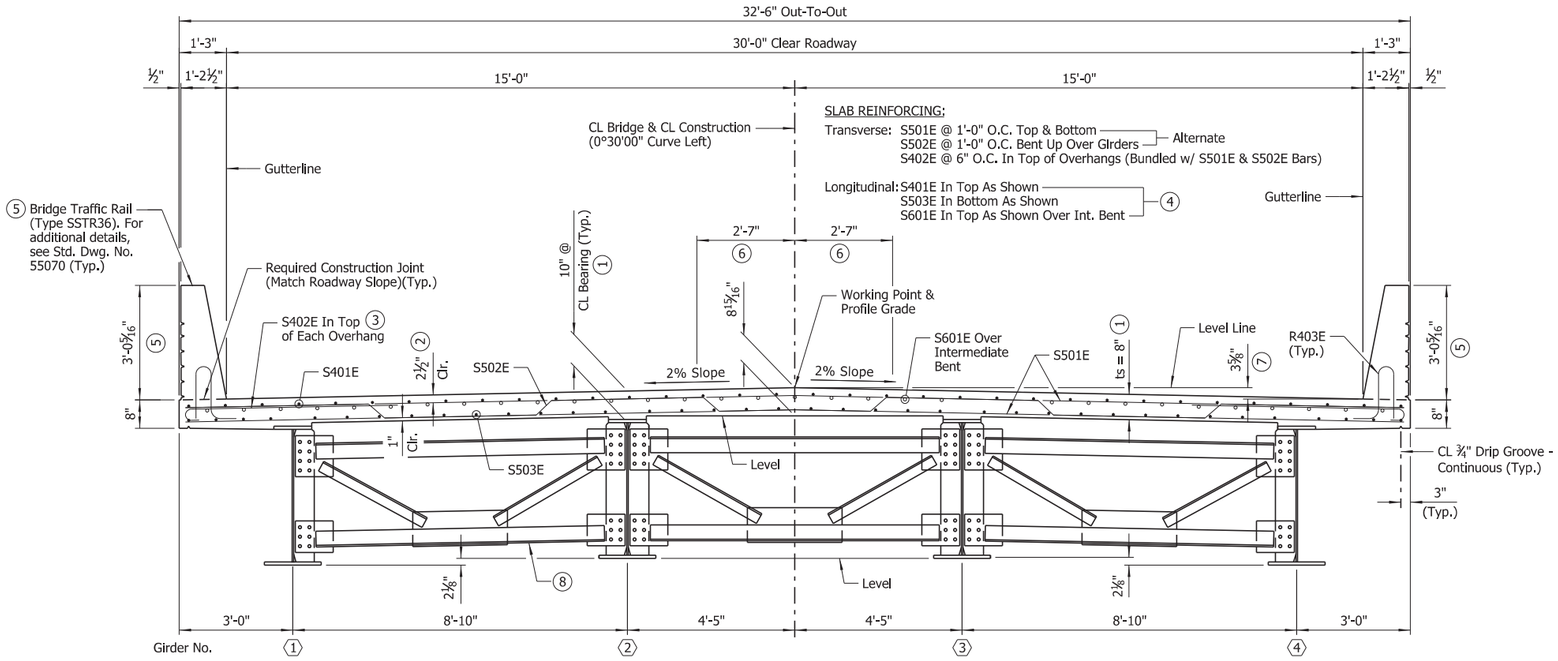

TYPICAL ROADWAY SECTION

(Looking Ahead)
Scale: ½" = 1'-0"

1 See "ADJUSTMENT FOR SLAB THICKNESS TOLERANCE on Std. Dwg. No. 55007.

2 Tolerance: Minus = ¼"
Plus = to the amount of slab thickening used to meet slab thickness tolerance. See "ADJUSTMENT FOR SLAB THICKNESS TOLERANCE" on Std. Dwg No. 55007.

3 Bundle with S501E and S502E bars in top. Rotate as needed to avoid interference with bottom mat of deck reinforcement.

4 See "REINFORCING PLAN & DECK POURING SEQUENCE" on Dwg. No. 65173.

5 Portion of outside face of bridge traffic rails to receive an Ashlar Stone Finish, see "DETAILS OF RAIL ENHANCEMENT".

6 See "ROUNDING DETAIL" on Std. Dwg. No. 55007

7 Working Point to Gutterline.

8 See Dwg. No. 65174 for cross-frame details.

NOTES:
Class 2 Protective Surface Treatment shall be applied to the roadway surface and roadway face and top of the bridge traffic rails.

Class 3 Textured Coating Finish shall be applied to all areas specified in Special Provision "TEXTURED COATING FINISH" and in accordance with Subsection 802.19(B)(3). Textured Coating Finish shall not be applied on surfaces where Class 2 Protective Surface Treatment is applied.

At the Contractor's option, two straight epoxy coated No. 5 bars may be substitued for bar S502E. Payment for reinforcing will be based on the weight of bar S502E.

Bar positions and clearances from the forms shall be maintained by means of stays, ties, hangers or other approved devices sufficient in size and number to prevent displacement during construction, per Subsection 804.06. Placement of slab bolsters or hi-chairs with full-length lower runners directly on removable deck forms will not be allowed.

For "STANDARD GENERAL NOTES," see Std. Dwg. No. 55006.

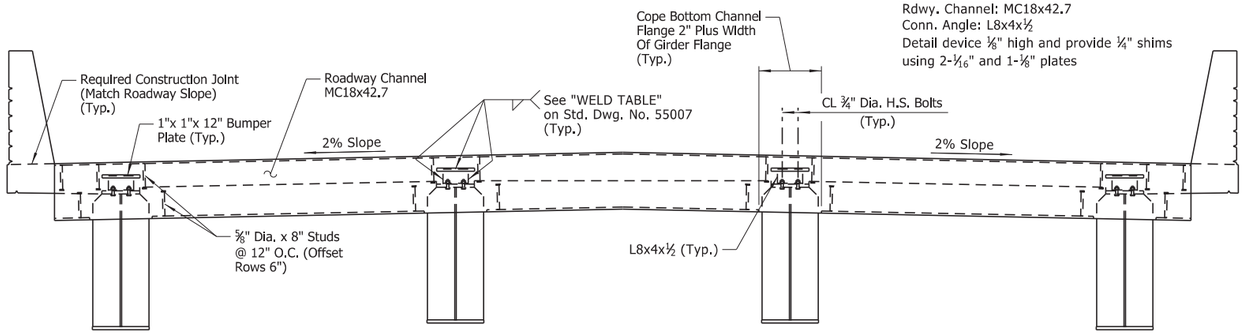

TYPICAL SECTION THRU POURED SILICONE JOINT

(Looking Ahead - Bent No. 1)
No Scale

NOTE:
As an alternate to ⅝" Dia. studs, ½" Dia. x 8" studs spaced @ 8" o.c. may be used. Use weight of ⅝" Dia. stud as basis of measurement of Structural Steel in anchors.

SILICONE JOINT DATA

Location	"A" Width Perpendicular To Joint At 24 Hour Average Temperature Of: 9			"B" Perpendicular To Joint At 60°F	Bumper Plate Size
	40°F	60°F	80°F		
Bent Nos. 1 & 3	2 3/16"	2"	1 13/16"	2¼"±	1" x 1"

9 The temperature used to set the joint opening shall be the approximate average air temperature during the 24 hour period immediately before the bolts are tightened. The Engineer shall establish the temperature. Interpolation of the table may be necessary.

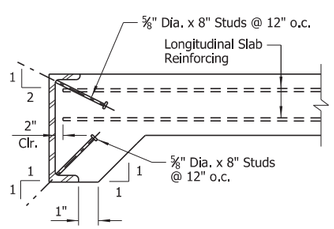

DETAIL OF ANCHORS & PLACEMENT OF LONGITUDINAL SLAB REINFORCING

No Scale

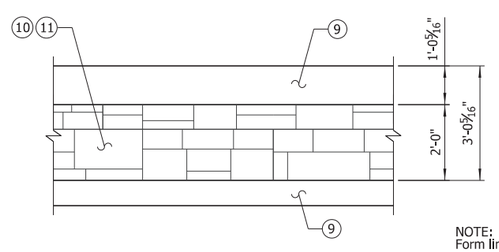

DETAILS OF RAIL ENHANCEMENT

Scale ¾" = 1'-0"

NOTE:
Form liner shall be a max. depth of 1½" to provide a min. clearance of 1½" to traffic rail reinforcing.

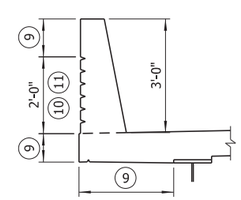

DETAIL X

Scale ½" = 1'-0"

9 Class 3 Textured Coating Finish (Color = Brown, Color Chip 33522)

10 Class 3 Textured Coating Finish (Color = Brown, Color Chip 30219)

11 "Ashlar Stone" Pattern Form Liner, see Special Provision "ARCHITECTURAL FINISH".

STATE OF ARKANSAS
LICENSED PROFESSIONAL ENGINEER
No.8017
JOHN H. RUDDELL
Digitally Signed 09/02/2022
BRIDGE ENGINEER

SHEET 1 OF 5
DETAILS OF 200'-0" CONTINUOUS PLATE GIRDER UNIT

ROUTE SEC.

ARKANSAS STATE HIGHWAY COMMISSION

LITTLE ROCK, ARK.

DRAWN BY: CSW DATE: MAR. 2021 FILENAME: b070513_s1.dgn
CHECKED BY: JHR DATE: JAN. 2021 SCALE: As Shown
DESIGNED BY: CSW DATE: MAR. 2021

BRIDGE NO. 07582 DRAWING NO. 65170

JMEdwards 9/2/2022 11:30:17 AM
WORKSPACE: ARDOT Bridge (2019)
L:\2017\1701763\4 - 070513-30 Str-4pprs Hwy 51\Drawings\b070513_S401_SX.dgn
REVISED DATE:

DATE REVISED	DATE FILMED	DATE REVISED	DATE FILMED	FED. ROAD DIST. NO.	STATE	FED. AID PROJ. NO.	SHEET NO.	TOTAL SHEETS
				6	ARK.			
				JOB NO.		070513	72	109
				(1) 07582		200' PL GIRDER UNIT		65171

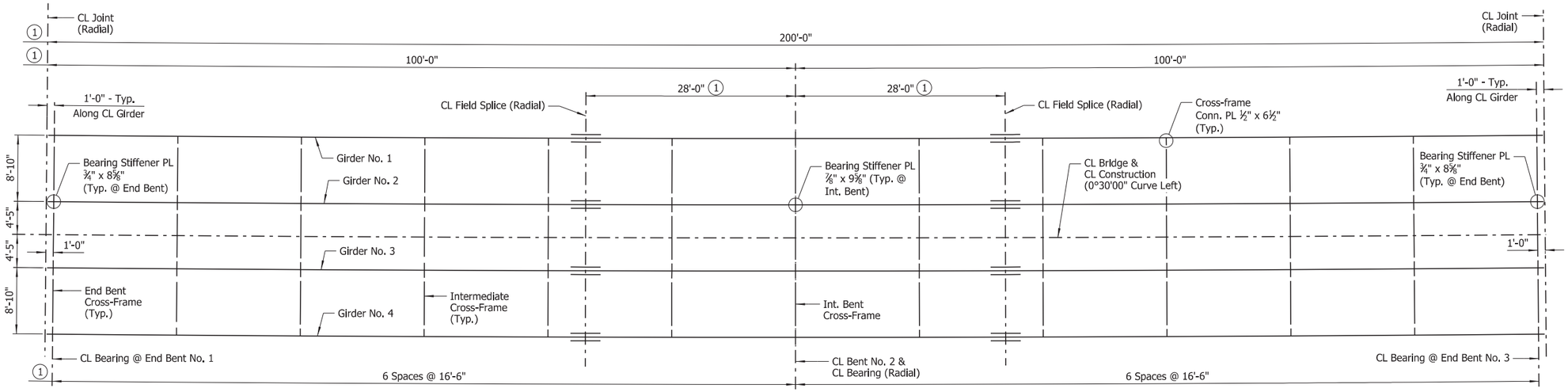

FRAMING PLAN

Scale: ⅛" = 1'-0"

(1) Measured Along CL Bridge

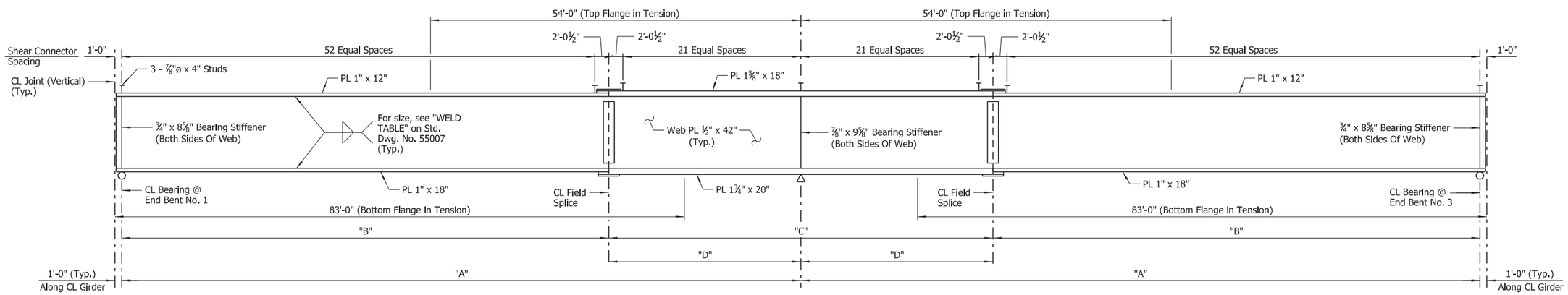

GIRDER ELEVATION

(Dimensions Measured Along CL Girder)
No Scale

TABLE OF VARIABLES				
GIRDER NO.	"A"	"B"	"C"	"D"
1	98'-10⅝"	70'-11"	55'-11¼"	27'-11⅜"
2	98'-11 9/16"	70'-11 1/16"	55'-11¾"	27'-11⅞"
3	99'-0 7/16"	71'-0 5/16"	56'-0¼"	28'-0⅛"
4	99'-1⅜"	71'-1"	56'-0¾"	28'-0⅜"

NOTES:
All girders are oriented along curves concentric with CL Bridge.

All intermediate and interior bent cross-frames are oriented along lines radial to CL Bridge. End unit cross-frames are oriented parallel to CL Joint.

For "STANDARD GENERAL NOTES", see Std. Dwg. No. 55006.

All structural steel shall be ASTM A709, Gr. 50 unless noted otherwise and shall be paid for at the unit price per pound bid for "STRUCTURAL STEEL IN PLATE GIRDER SPANS (A709, GR. 50)".

Bolted Field Splices shown may be eliminated or shop welded splices may be substituted with approval of the Engineer. Payment will be made on the basis of the Plan Quantities.

For "DETAILS OF WELDED SPLICES FOR PLATE GIRDERS" and "SHEAR CONNECTOR DETAIL", see Std. Dwg. No. 55007.

NOTES:
The erection of the structural steel shall be performed according to a plan permitting the steel to be erected plumb with bolts tightened while the steel is as close as possible to the no-load condition, so that the bolt holes can be aligned. This requirement may necessitate the use of large capacity cranes, temporary shoring or jacking frames.

The Contractor shall ensure that girders are stable throughout the erection process. The Contractor will be responsible for providing temporary bracing or stiffening devices to accommodate handling stresses in individual members or segments of the structure during erection.

STATE OF ARKANSAS
LICENSED PROFESSIONAL ENGINEER
No.8017
JOHN H. RUDDELL

Digitally Signed 09/02/2022
BRIDGE ENGINEER

SHEET 2 OF 5
DETAILS OF 200'-0" CONTINUOUS PLATE GIRDER UNIT

ROUTE SEC.

ARKANSAS STATE HIGHWAY COMMISSION
LITTLE ROCK, ARK.

DRAWN BY: CSW DATE: MAR. 2021 FILENAME: b070513_s2.dgn
CHECKED BY: JHR DATE: OCT. 2021 SCALE: As Shown
DESIGNED BY: CSW DATE: MAR. 2021
BRIDGE NO. 07582 DRAWING NO. 65171

JMEdwards 9/2/2022 11:30:18 AM
WORKSPACE: ARDOT Bridge (2019)
L:\2017\17017634 - 070513 I-30 Str-Apprs Hwy 51\Drawings\b070513_S402_SF.dgn
REVISED DATE:

DATE REVISED	DATE FILMED	DATE REVISED	DATE FILMED	FED. ROAD DIST. NO.	STATE	FED. AID PROJ. NO.	SHEET NO.	TOTAL SHEETS
				6	ARK.			
				JOB NO.		070513	73	109
				07582		200' PL GIRDER UNIT		65172

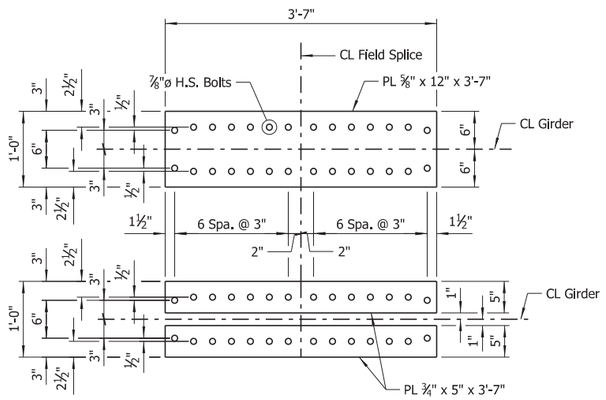

TOP FLANGE SPLICE

Scale: 1" = 1'-0"

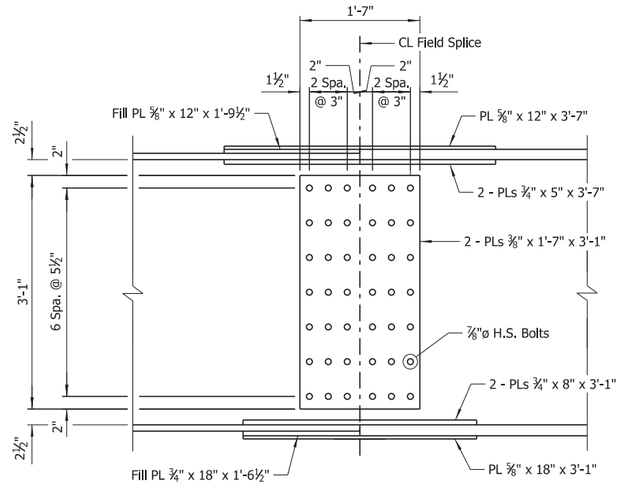

ELEVATION OF FIELD SPLICE

Scale: 1" = 1'-0"

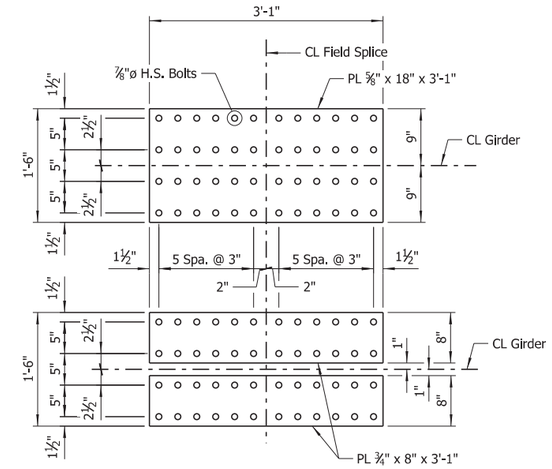

BOTTOM FLANGE SPLICE

Scale: 1" = 1'-0"

NOTES:
All field splice bolts shall be ⅞" dia. high strength bolts.

All holes for field splice bolts shall be 15/16" dia.

All field splice plates shall be ASTM A709, Gr. 50.

TABLE OF DEAD LOAD DEFLECTIONS (Inches)

Point Of Deflection	Wt. Of Girder And Cross-Frames	Wt. Of Girder, Cross-Frames And Slab	Wt. Of Girder, Cross-Frames, Slab And Railing
1.0	0.00	0.00	0.00
1.1	0.13	0.71	0.78
1.2	0.22	1.24	1.36
1.3	0.29	1.61	1.76
1.4	0.31	1.75	1.92
1.5	0.29	1.64	1.79
1.6	0.24	1.34	1.48
1.7	0.17	0.91	1.00
1.8	0.09	0.49	0.54
1.9	0.03	0.16	0.18
2.0	0.00	0.00	0.00
2.1	0.02	0.12	0.13
2.2	0.08	0.45	0.49
2.3	0.16	0.87	0.96
2.4	0.23	1.29	1.42
2.5	0.29	1.63	1.79
2.6	0.31	1.73	1.90
2.7	0.29	1.62	1.78
2.8	0.22	1.26	1.38
2.9	0.13	0.71	0.77
3.0	0.00	0.00	0.00

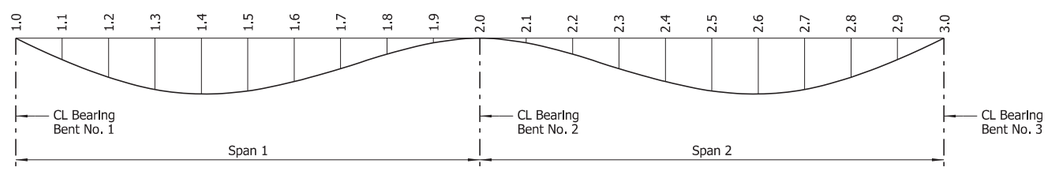

DEAD LOAD DEFLECTION DIAGRAM

No Scale

NOTES:
Camber for dead load deflection plus vertical curve +/- ¼" tolerance. Deflections shown are along CL Girder from a chord from CL Bearing to CL Bearing. Negative sign (-) indicates a point above chord. Vertical curve corrections are not included.

Dead load deflections shown include an assumed loading of 18 psf to account for stay-in-place metal deck forms.

Revision to the deflection tables may be necessary upon review of the Contractor's submitted forming details.

STATE OF ARKANSAS
LICENSED PROFESSIONAL ENGINEER
No.8017
JOHN H. RUDDELL

Digitally Signed 09/02/2022

BRIDGE ENGINEER

SHEET 3 OF 5
DETAILS OF 200'-0" CONTINUOUS
PLATE GIRDER UNIT

ROUTE SEC.

ARKANSAS STATE HIGHWAY COMMISSION

LITTLE ROCK, ARK.

DRAWN BY: HEW DATE: OCT. 2021 FILENAME: b070513_s3.dgn
CHECKED BY: JHR DATE: OCT. 2021 SCALE: As Shown
DESIGNED BY: CSW DATE: MAR. 2021

BRIDGE NO. 07582 DRAWING NO. 65172

JMEdwards 9/2/2022 11:30:19 AM
WORKSPACE: ARDOT Bridge (2019)
L:\2017\1701763 4 - 070513 I-30 Str-Apprs Hwy 51\Drawings\b070513_S403_SD.dgn
REVISED DATE:

DATE REVISED	DATE FILMED	DATE REVISED	DATE FILMED	FED. ROAD DIST. NO.	STATE	FED. AID PROJ. NO.	SHEET NO.	TOTAL SHEETS
				6	ARK.			
				JOB NO.		070513	74	109
				07582		200' PL GIRDER UNIT		65173

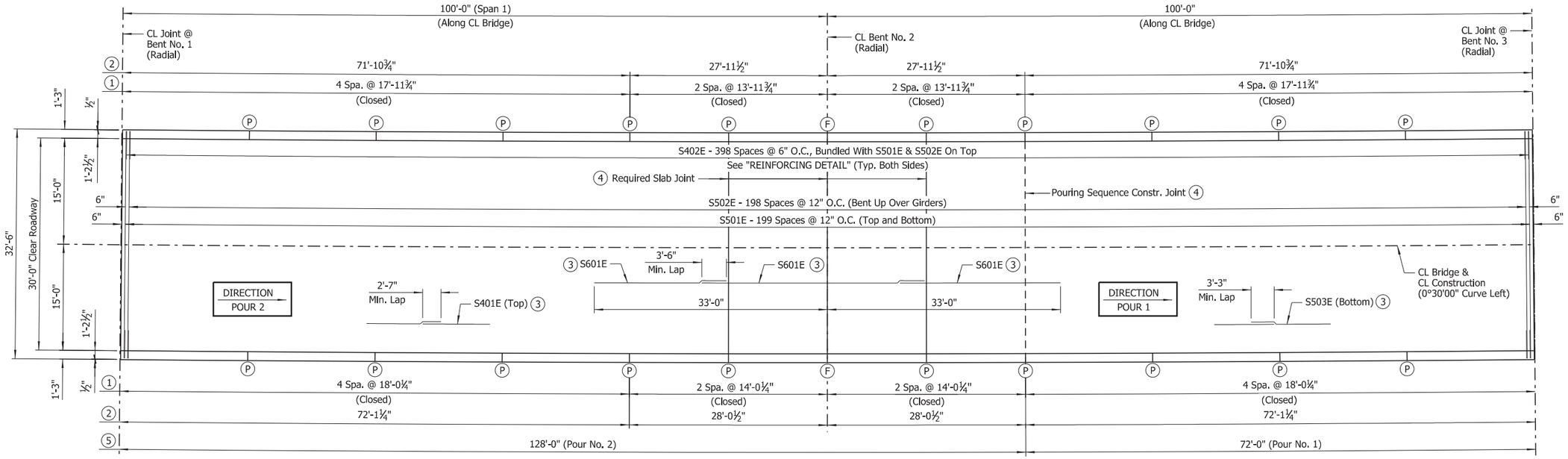

REINFORCING PLAN & DECK POURING SEQUENCE

Scale: ⅛" = 1'-0"

BAR LIST			
MARK	NO. REQ'D	LENGTH	P.D.
R401E	800	5'-11"	2½"
R402E	80	5'-6"	Str.
R403E	800	3'-6"	3", 3¾"
R404E	128	17'-8"	Str.
R405E	64	13'-8"	Str.
S401E	204	35'-6"	Str.
S402E	798	7'-0"	3"
S501E	400	32'-2"	Str.
S502E	199	32'-10"	3"
S503E	190	42'-8"	Str.
S601E	99	24'-4"	Str.

BAR BENDING DIAGRAMS

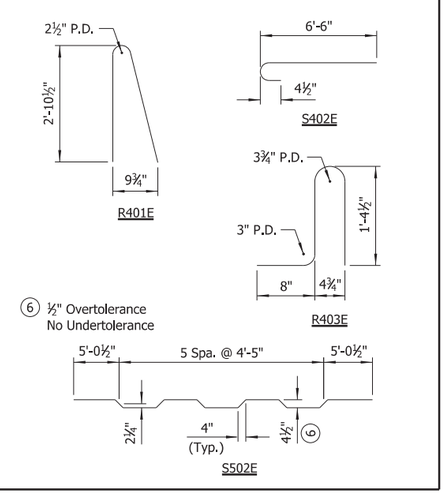

NOTES:
Dimensions of bars are out-to-out.

Bar designations ending with "E" indicate epoxy coated bars.

1. Traffic rail joint spacing (measured along gutterline) - Rail joints designated with symbol (F) shall be stopped 6" from top of slab. All other rail joints with symbol (P) shall be partial depth joints stopped 16" from top of slab.
2. Measured along edge of deck.
3. Place as shown in "TYPICAL ROADWAY SECTION" on Dwg. No. 65170.
4. See "TRANSVERSE SLAB JOINT DETAIL" on Std. Dwg. No. 55007.
5. Pouring Sequence (Measured Along CL Bridge)

NOTES:
Pours with the same number may be placed simultaneously or separately. All Pours (1) must be placed before Pour (2) can be placed. 48 hours shall elapse between the end of a pour and the start of the next pour. 72 hours shall elapse between adjacent pours.

Concrete in bridge superstructure shall be placed, consolidated and screeded off for the entire pour before any concrete has taken its initial set. This may require the use of a retarding agent.

72 hours shall elapse between the completion of the entire deck slab and the start of a railing pour. Any railing pours made before the entire slab unit has been placed must be approved by the Engineer.

No deviations from the pouring sequence shown will be allowed.

Required slab joints and pouring sequence joints shall align with rail joints at gutterline.

For "STANDARD GENERAL NOTES", see Std. Dwg. No. 55006.

Unless noted otherwise, spacing shown for all transverse reinforcing is measured along CL Bridge. All transverse reinforcing shall be placed on lines radial to CL Bridge.

All longitudinal lines and longitudinal slab reinforcing shall be placed along curves concentric with CL Bridge.

For rail reinforcing details and details of partial-depth and full-depth rail joints, see Std. Dwg. No. 55070.

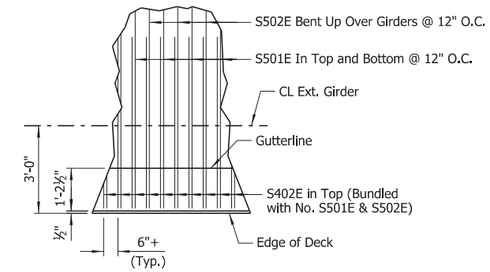

REINFORCING DETAIL

No Scale

TABLE OF VARIABLES		
CLOSED RAIL PANELS		
PANEL LENGTH	A	R4XXE
17'-11¾"	35	04
18'-0¼"	35	04
13'-11¾"	27	05
14'-0¼"	27	05

STATE OF ARKANSAS
LICENSED PROFESSIONAL ENGINEER
No.8017
JOHN H. RUDDELL

Digitally Signed 09/02/2022

BRIDGE ENGINEER

SHEET 4 OF 5
DETAILS OF 200'-0" CONTINUOUS PLATE GIRDER UNIT

ROUTE SEC.

ARKANSAS STATE HIGHWAY COMMISSION

LITTLE ROCK, ARK.

DRAWN BY: HEW DATE: OCT. 2021 FILENAME: b070513_s4.dgn
CHECKED BY: JHR DATE: JAN. 2021 SCALE: As Shown
DESIGNED BY: CSW DATE: MAR. 2021

BRIDGE NO. 07582 DRAWING NO. 65173

JMEdwards 9/2/2022 11:30:20 AM
WORKSPACE: ARDOT Bridge (2019)
L:\2017\17017634 - 070513 I-30 Str-Apprs Hwy 51\Drawings\b070513_S404_SB.dgn
REVISED DATE:

DATE REVISED	DATE FILMED	DATE REVISED	DATE FILMED	FED. ROAD DIST. NO.	STATE	FED. AID PROJ. NO.	SHEET NO.	TOTAL SHEETS
				6	ARK.			
				JOB NO.		070513	75	109
				(I) 07582		200' PL GIRDER UNIT		65174

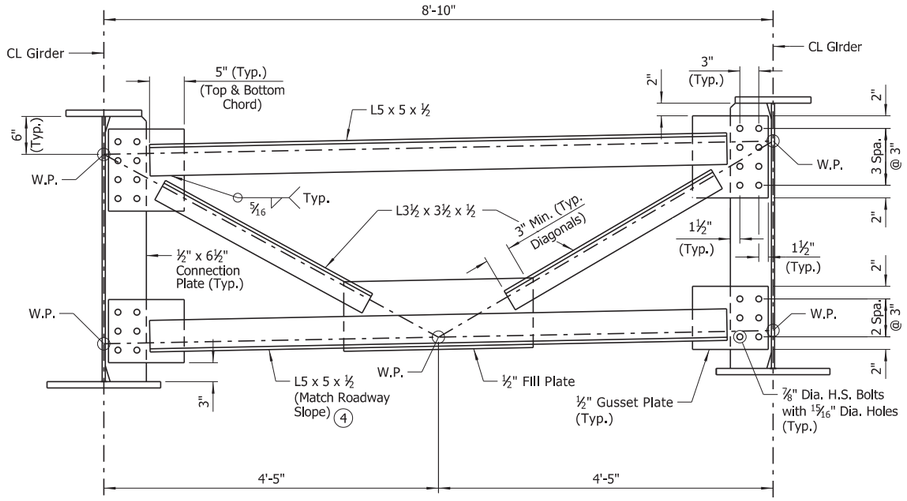

INTERMEDIATE CROSS-FRAME DETAIL

Scale: 1" = 1'-0"

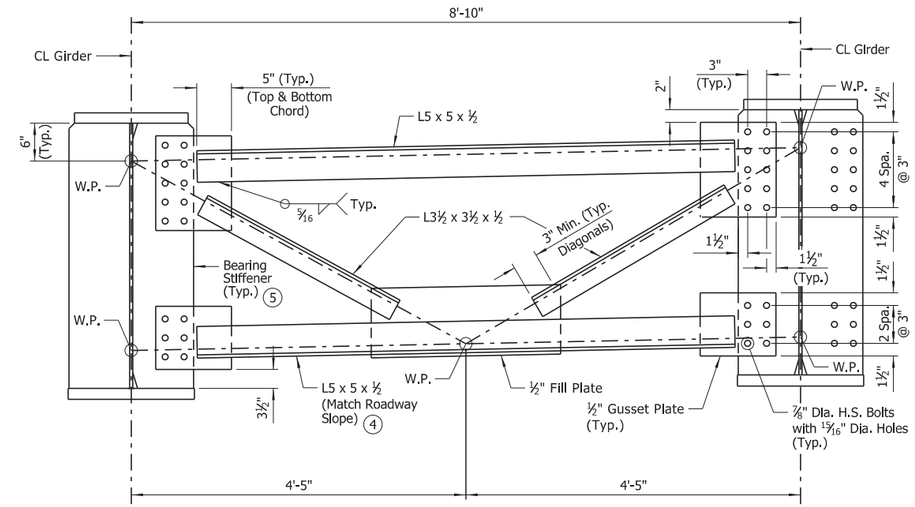

END/INT. BENT CROSS-FRAME DETAIL

Scale: 1" = 1'-0"

NOTE:
End Bent cross-frames shall be fabricated such that the horizontal leg of the cross-frame members are directed away from CL joint.

1. See "WELD TABLE" on Std. Dwg. No. 55007 for minimum weld size.
2. Stop weld ¼" to 1" from end of clip (Typ.)
3. If permanent deck forms are used, the fabricator shall clip the plate as necessary to accommodate the deck form supports.
4. Cross-frame in middle bay shall be constructed level. See "TYPICAL ROADWAY SECTION" on Dwg. No. 65170.
5. See "FRAMING PLAN", on Dwg. No. 65171.

NOTES:
All field connections shall be bolted with ⅞" Dia. H.S. bolts using 15/16" Dia. open holes.

Bearing Stiffeners shall be fabricated to be vertical in their final positions.

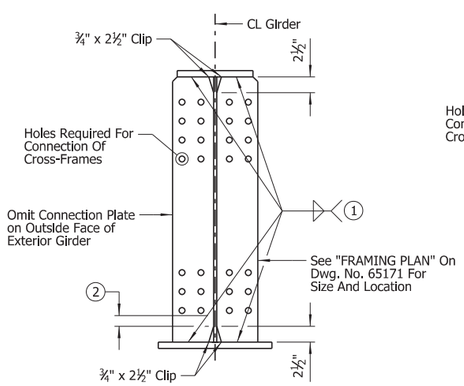

CONNECTION PLATE DETAIL

Scale: 1" = 1'-0"

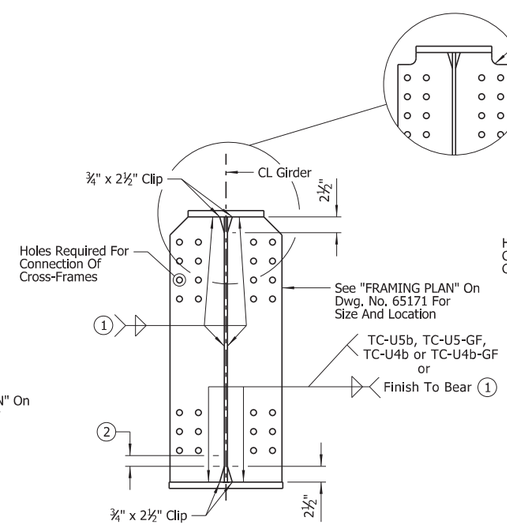

END BENTS

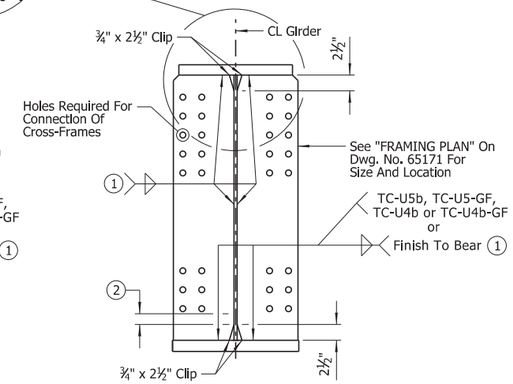

INTERMEDIATE BENT

BEARING STIFFENER DETAIL

Scale: 1" = 1'-0"

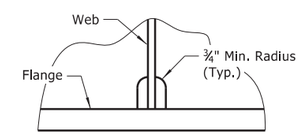

Height and width of clip shall be as noted in other details.

ALTERNATE CLIP DETAIL

(For Bearing Stiffeners and Cross-frame Connection Plates)
No Scale

STATE OF ARKANSAS
LICENSED PROFESSIONAL ENGINEER
No.8017
JOHN H. RUDDELL

Digitally Signed 09/02/2022

BRIDGE ENGINEER

SHEET 5 OF 5
DETAILS OF 200'-0" CONTINUOUS
PLATE GIRDER UNIT

ROUTE SEC.

ARKANSAS STATE HIGHWAY COMMISSION

LITTLE ROCK, ARK.

DRAWN BY: HEW DATE: OCT. 2021 FILENAME: b070513_s5.dgn
CHECKED BY: JHR DATE: OCT. 2021 SCALE: As Shown
DESIGNED BY: CSW DATE: MAR. 2021

BRIDGE NO. 07582 DRAWING NO. 65174

JMEdwards 9/2/2022 11:30:20 AM
WORKSPACE: ARDOT Bridge (2019)
L:\2017\17017634 - 070513 I-30 Str-Apprs Hwy 51\Drawings\b070513_S405_MD.dgn
REVISED DATE:

DATE REVISED	DATE FILMED	DATE REVISED	DATE FILMED	FED. ROAD DIST. NO.	STATE	FED. AID PROJ. NO.	SHEET NO.	TOTAL SHEETS
				6	ARK.			
				JOB NO.		070513	76	109
				(1) 07582		APPROACH SLABS		65174A

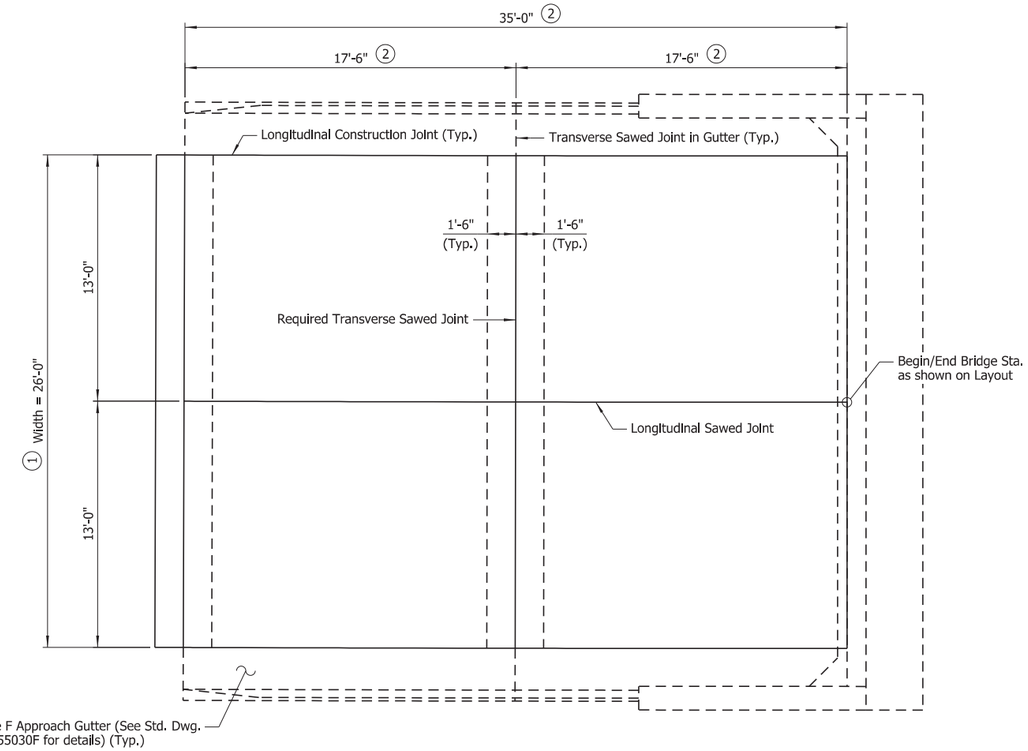

PLAN - TYPE SPECIAL APPROACH SLAB

(Shown for Begin Bridge, End Bridge Similar)
Scale: ¼" = 1'-0"

NOTE:
All longitudinal lines shall be on curves concentric to CL Construction. Adjustment to longitudinal bar lengths may be required. Transverse reinforcing shall be placed on lines radial to CL Construction.

(1) Modify Type C1 Approach Slab (Width = 24'-0") to accommodate the width as shown.

(2) Measured along CL Construction. Modify Type C1 Approach Slab (Length = 36'-6") to accommodate the length as shown.

GENERAL NOTES

All concrete shall be Class S (AE) with a minimum 28-day compressive strength f'c = 4,000 psi and shall be poured in the dry.

All reinforcing steel shall be Grade 60 (yield strength = 60,000 psi) conforming to AASHTO M 31 or M 322, Type A, with mill test reports.

The surface finish for Approach Slabs shall match that used on the bridge deck.

Approach Slabs will be measured and paid for in accordance with Section 504.

Place Type Special Approach Slabs as shown. See Std. Dwg. No. 55040C1 for details not shown.

QUANTITIES FOR ONE TYPE SPECIAL APPROACH SLAB

(For Information Only)

"W"	REINFORCING STEEL (LBS.)	CONCRETE (CU. YDS.)
26'-0"	6,040	51.32

BAR LIST - Type Special Approach Slab

MARK	NO. REQ'D	LENGTH
S401	32	25'-8"
S402	54	2'-8"
S403	48	3'-0"
S501	36	25'-8"
S502	18	34'-8"
S701	52	34'-8"

NOTE:
Number of bars shown is for one Type Special Approach Slab. Two Type Special Approach Slabs are required.

STATE OF ARKANSAS
LICENSED PROFESSIONAL ENGINEER
No.8017
JOHN H. RUDDELL

Digitally Signed 09/02/2022
BRIDGE ENGINEER

DETAILS OF TYPE SPECIAL APPROACH SLABS

ROUTE SEC.

ARKANSAS STATE HIGHWAY COMMISSION

LITTLE ROCK, ARK.

DRAWN BY: JME DATE: SEPT. 2022 FILENAME: b070513_AS.dgn
CHECKED BY: JHR DATE: SEPT. 2022 SCALE: As Shown
DESIGNED BY: JME DATE: SEPT. 2022
BRIDGE NO. 07582 DRAWING NO. 65174A

JMEdwards 9/2/2022 11:30:21 AM
WORKSPACE: ARDOT Bridge (2019)
L:\2017\17017634 - 070513 I-30 Str-4pprs Hwy 51\Drawings\b070513_S501_AS.dgn
REVISED DATE:

DATE REVISED	DATE FILMED	DATE REVISED	DATE FILMED	FED.RD. DIST.NO.	STATE	FED.AID PROJ.NO.	SHEET NO.	TOTAL SHEETS
				6	ARK.			
				JOB NO.		070513	77	109
				(2)	CROSS SECTIONS			

STA. 108+92 IN PLACE
36" X 57' R.C. PIPE CULVERT
WITH HDWLS. LT. & RT.
REMOVE HDWLS. LT. & RT. AND
EXTEND R.C. PIPE 1' LT. AND 3' RT.
TO A COMPLETED LENGTH OF 61'
(CLASS III) (TYPE 3 BEDDING)
W/ F.E.S. LT. & RT.
Q50 = 24 CFS DA= 8.5 ACRES
36" R.C. PIPE = 12 LIN. FT.
36" F.E.S. = 2 EACH

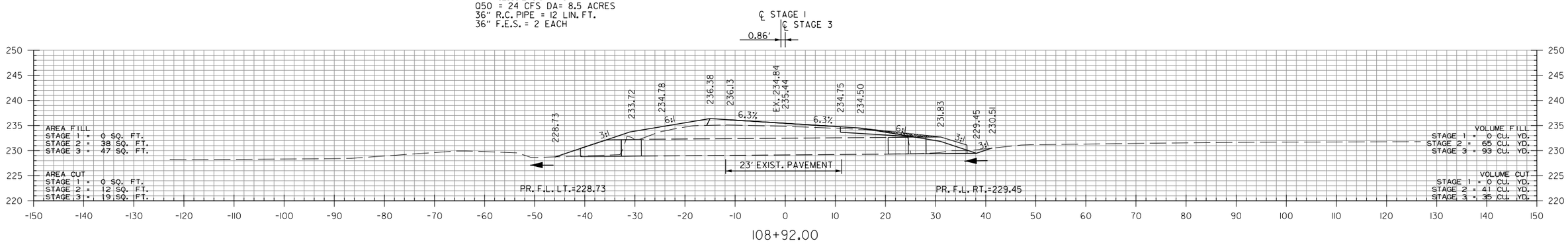

STA. 108+27.51 MAX SUPERELEVATION (0.080'/')

STA. 108+92
END SP. DT. RT. -0.70%
BEGIN SP. DT. RT. 0.90%
ELEV. 229.45

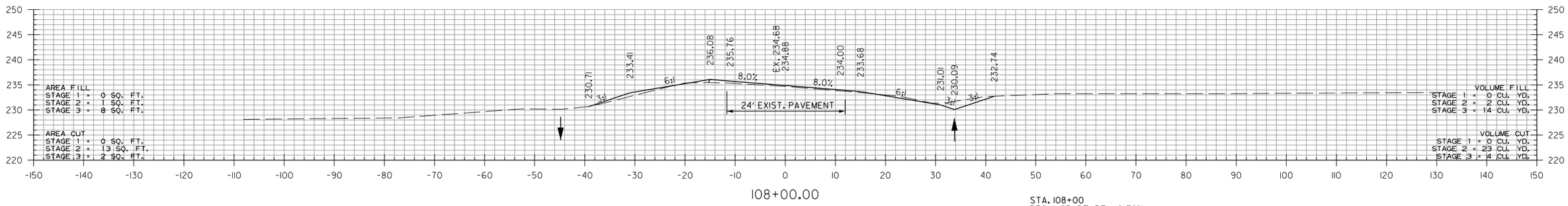

STA. 108+00
BEGIN SP. DT. RT. -0.70%
ELEV. 230.09

STA. 108+00.00 SUPERELEVATION (0.080'/') (MATCH EXISTING)

STA. 108+00.00 BEGIN JOB 070513

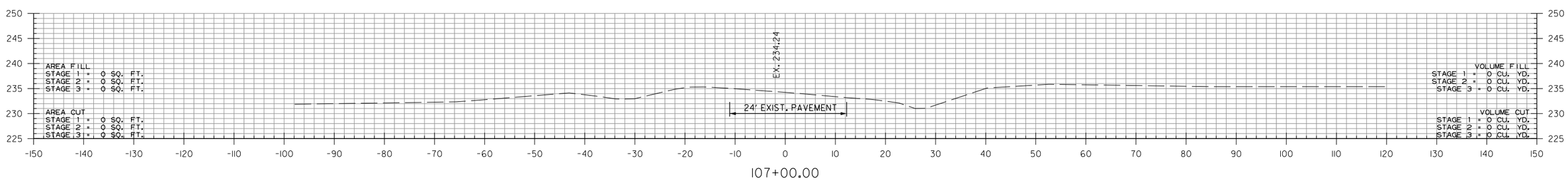

STA. 107+00.00 BEGIN 100' TRANSITION

STA. 107+00 TO STA. 108+92

DLTackett 9/2/2022 4:26:21 PM
WORKSPACE: AHTD
L:\2017\170176 34 - 070513 I-30 Str-Apprs Hwy 51\Drawings\r070513_CX_Hwy_51.dgn
REVISED DATE:

DATE REVISED	DATE FILMED	DATE REVISED	DATE FILMED	FED.RD. DIST.NO.	STATE	FED.AID PROJ.NO.	SHEET NO.	TOTAL SHEETS
				6	ARK.			
				JOB NO.		070513	78	109
				(2)	CROSS SECTIONS			

STA. 111+27.51 END SUPERELEVATION

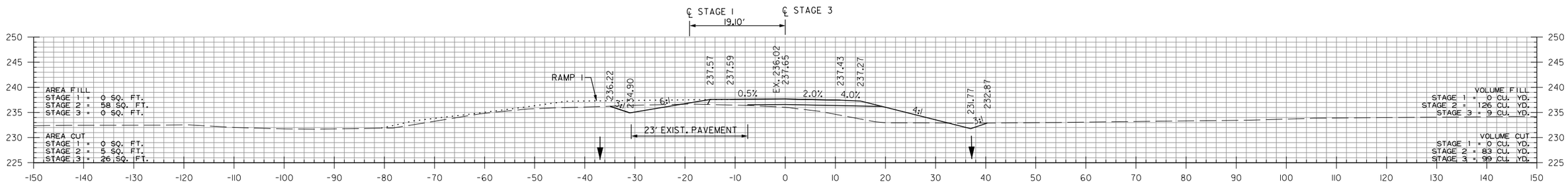

111+00.00

STA. 113+50 INSTALL
15" X 54' R.C PIPE CULVERT
(CLASS III) (TYPE 3 BEDDING)
GROUT PIPE COMPLETELY WITH
FLOWABLE SELECT MATERIAL
FOLLOWING STAGE 3A

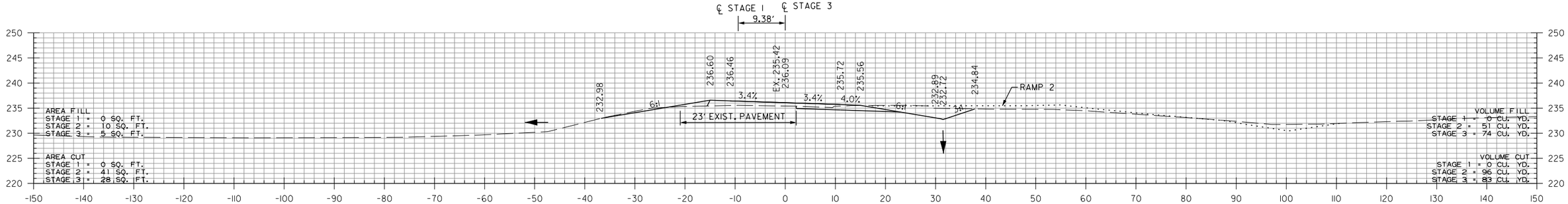

110+00.00

STA. 109+70
END SP. DT. RT. -0.90%
ELEV. 230.15

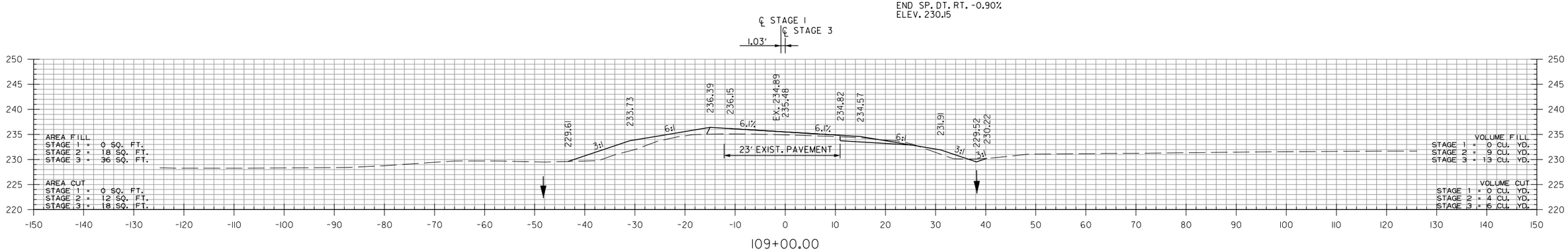

109+00.00

STA. 109+00 TO STA. 111+00

DLTackett 9/2/2022 4:26:22 PM
WORKSPACE: AHTD
L:\2017\170\7634 - 070513 I-30 Str-Apprs Hwy 5\Drawings\r070513_CX_Hwy_5.dgn
REVISED DATE:

DATE REVISED	DATE FILMED	DATE REVISED	DATE FILMED	FED.RD. DIST.NO.	STATE	FED.AID PROJ.NO.	SHEET NO.	TOTAL SHEETS
				6	ARK.			
				JOB NO.		070513	79	109
				(2)	CROSS SECTIONS			

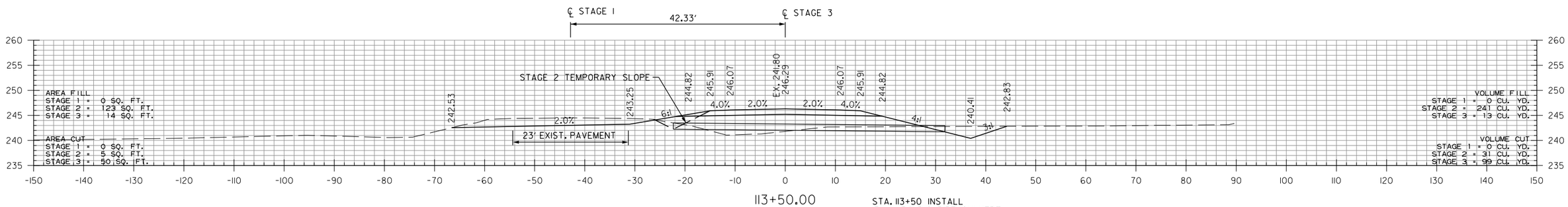

113+50.00

STA. 113+50 INSTALL
15" X 54' R.C PIPE CULVERT
(CLASS III) (TYPE 3 BEDDING)
GROUT PIPE COMPLETELY WITH
FLOWABLE SELECT MATERIAL
FOLLOWING STAGE 3A

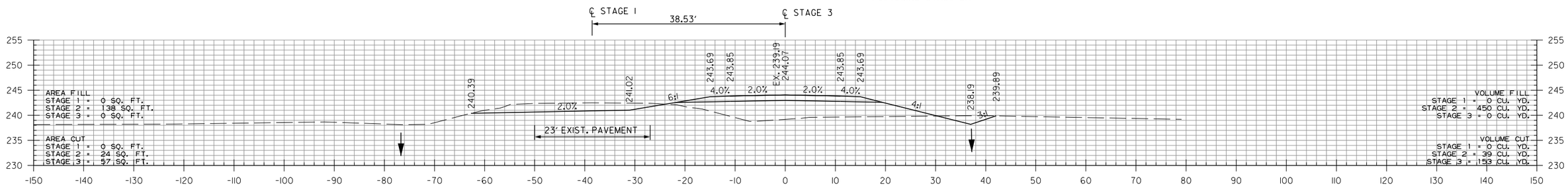

113+00.00

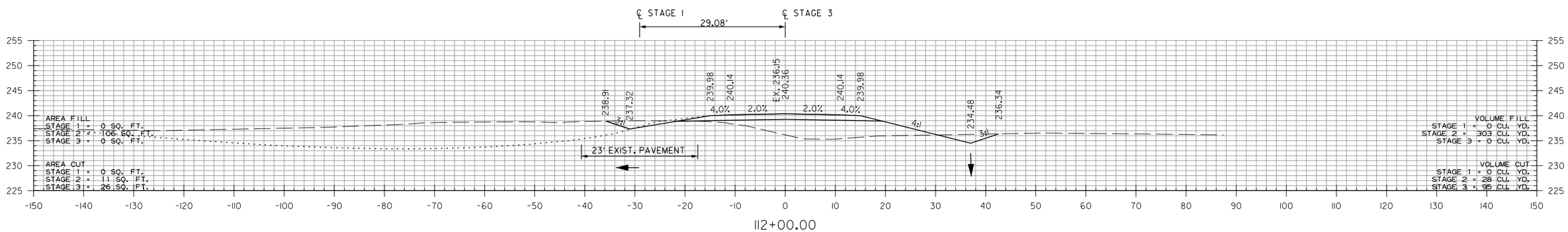

112+00.00

STA. 112+00 TO STA. 114+00

DLTackett 9/2/2022 4:26:22 PM
WORKSPACE: AHTD
L:\2017\1701634 - 070513 I-30 Str-Appros Hwy 5\Drawings\r070513_CX_Hwy_5.dgn
REVISED DATE:

DATE REVISED	DATE FILMED	DATE REVISED	DATE FILMED	FED.RD. DIST.NO.	STATE	FED.AID PROJ.NO.	SHEET NO.	TOTAL SHEETS
				6	ARK.			
				JOB NO.		070513	80	109
				(2)	CROSS SECTIONS			

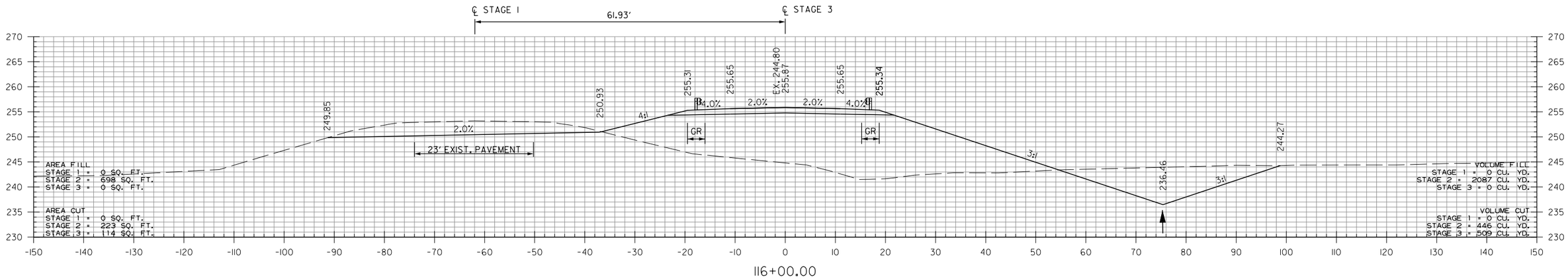

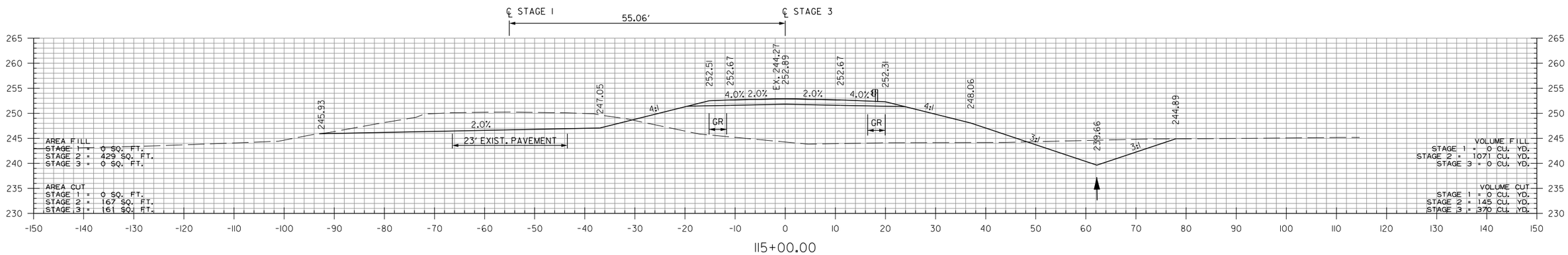

STA. 114+00 CONSTRUCT
APPROACH ON RT. =
35 CU. YDS.

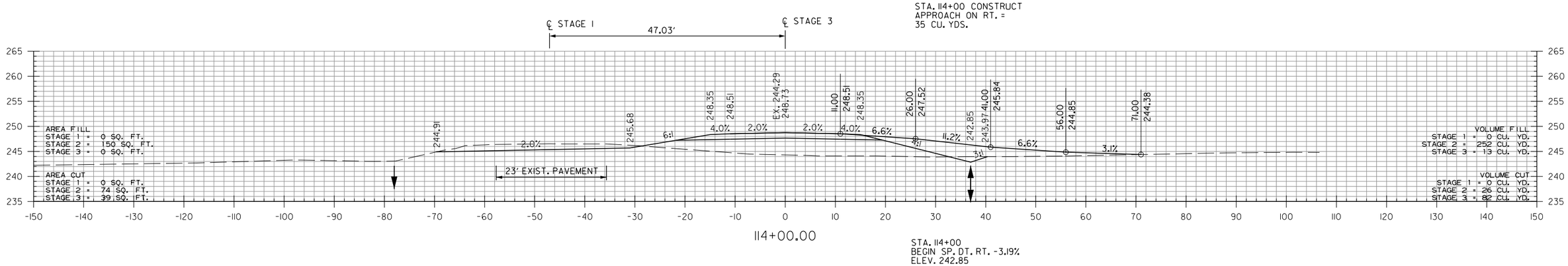

STA. 114+00
BEGIN SP. DT. RT. -3.19%
ELEV. 242.85

STA. 114+50 TO STA. 116+00

DLTackett 9/2/2022 4:26:22 PM
WORKSPACE: AHTD
L:\2017\170634 - 070513 I-30 Str-Apprs Hwy 51\Drawings\r070513_CX_Hwy_51.dgn
REVISED DATE:

DATE REVISED	DATE FILMED	DATE REVISED	DATE FILMED	FED.RD. DIST.NO.	STATE	FED.AID PROJ.NO.	SHEET NO.	TOTAL SHEETS
				6	ARK.			
				JOB NO.		070513	81	109
				(2)	CROSS SECTIONS			

STA. 117+15
END SP. DT. RT. -3.19%
ELEV. 232.79

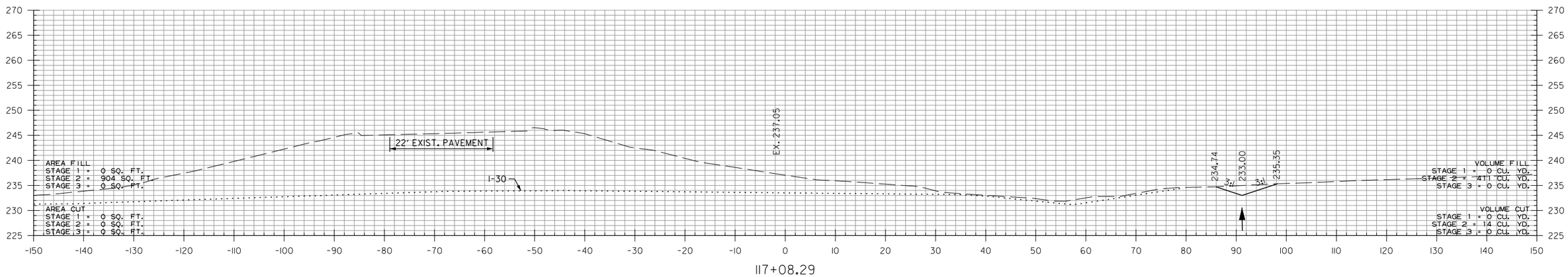

STA. 117+08.29 BRIDGE ABUTMENT RETAINING WALL

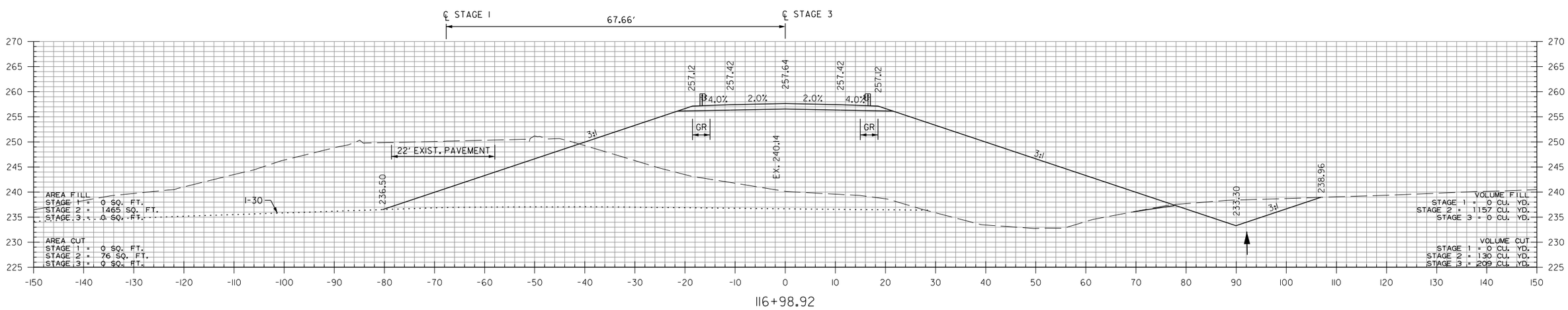

STA. 116+98.92 BEGIN BRIDGE

STA. 116+99 TO STA. 117+08

DLTackett 9/2/2022 4:26:23 PM
WORKSPACE: AHTD
L:\2017\701634 - 070513 I-30 Str-Apprs Hwy 5\Drawings\r070513_CX_Hwy_5.dgn
REVISED DATE:

DATE REVISED	DATE FILMED	DATE REVISED	DATE FILMED	FED.RD. DIST.NO.	STATE	FED.AID PROJ.NO.	SHEET NO.	TOTAL SHEETS
				6	ARK.			
				JOB NO.		070513	82	109
				2	CROSS SECTIONS			

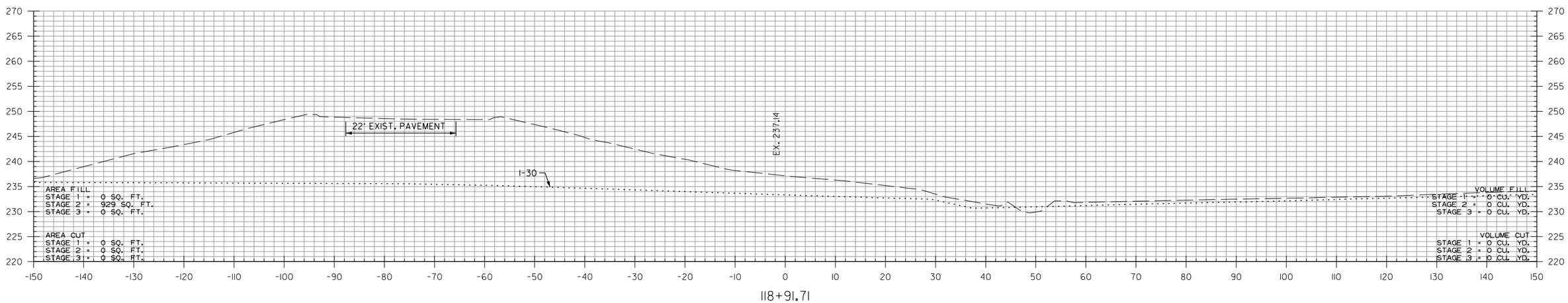

118+91.71

STA. 118+91.71 BRIDGE ABUTMENT RETAINING WALL

STA. 118+92 TO STA. 118+92

DLTackett 9/2/2022 4:26:23 PM
WORKSPACE: AHTD
L:\2017\170176\34 - 070513 I-30 Str-Apprs Hwy 51\Drawings\r070513_CX_Hwy_51.dgn
REVISED DATE:

DATE REVISED	DATE FILMED	DATE REVISED	DATE FILMED	FED.RD. DIST.NO.	STATE	FED.AID PROJ.NO.	SHEET NO.	TOTAL SHEETS
				6	ARK.			
				JOB NO.		070513	83	109
				(2)	CROSS SECTIONS			

STA. 120+10.88 BEGIN SUPERELEVATION

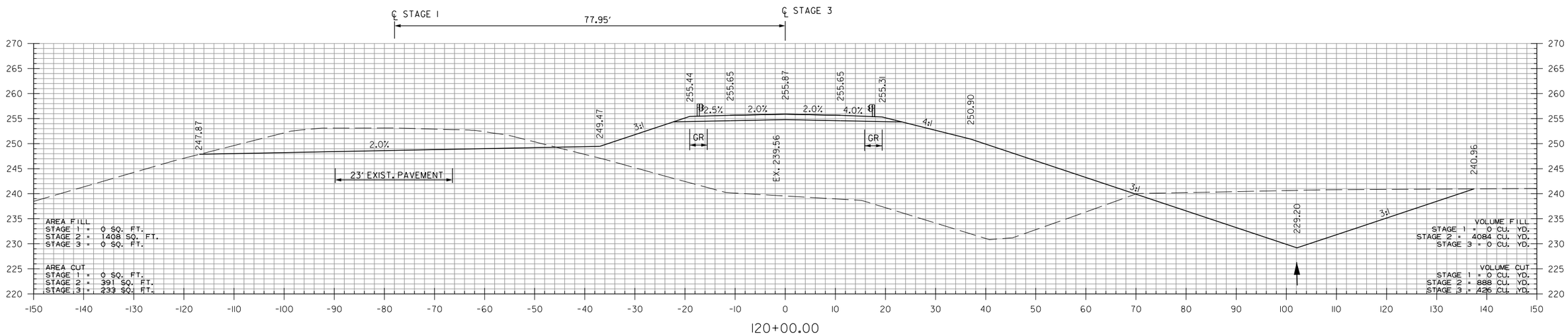

STA. 119+05
BEGIN SP. DT. RT. -0.20%
ELEV. 229.39

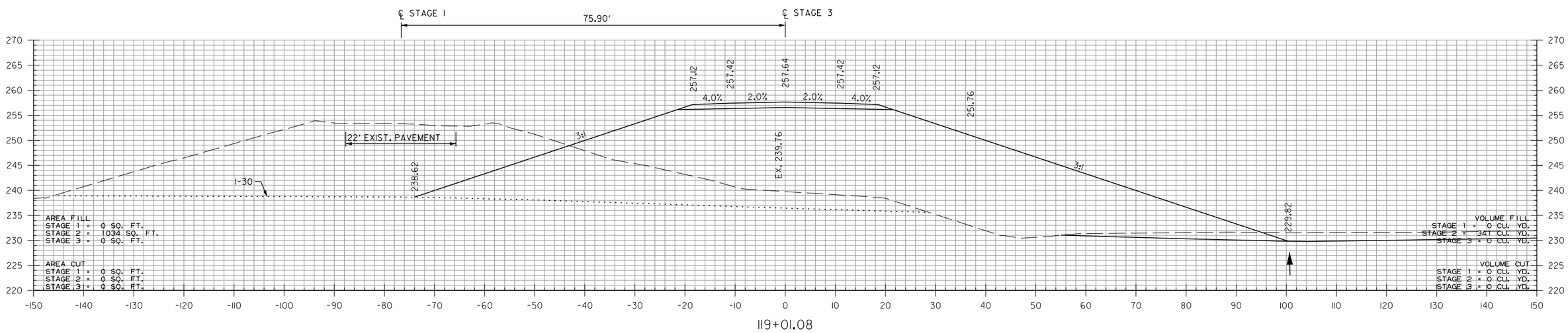

STA. 119+01.08 END BRIDGE

STA. 119+01 TO STA. 120+00

DLTackett 9/2/2022 4:26:23 PM
WORKSPACE: AHTD
L:\20TN\70170634 - 070513 I-30 Str-Apprs Hwy 5\Drawings\r070513_CX_Hwy_5.dgn
REVISED DATE:

DATE REVISED	DATE FILMED	DATE REVISED	DATE FILMED	FED.RD. DIST.NO.	STATE	FED.AID PROJ.NO.	SHEET NO.	TOTAL SHEETS
				6	ARK.			
				JOB NO.		070513	84	109

(2) CROSS SECTIONS

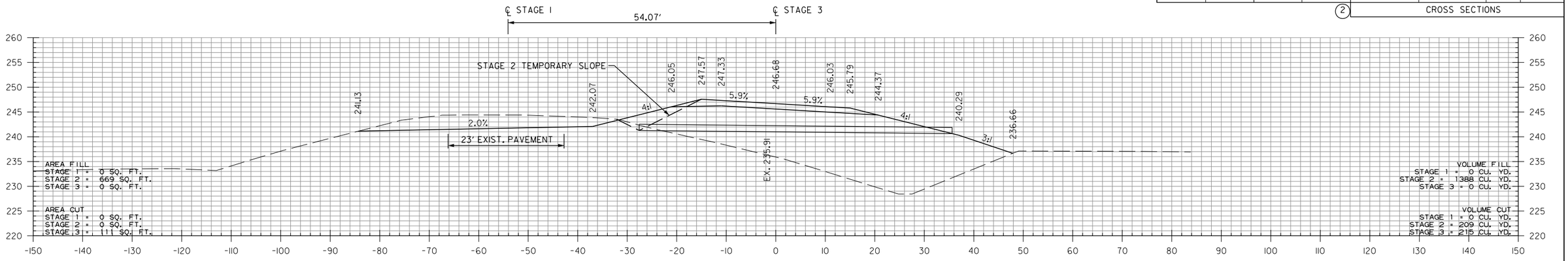

122+50.00

STA. 122+50 INSTALL
15" X 63' R.C PIPE CULVERT
(CLASS III) (TYPE 3 BEDDING)
GROUT PIPE COMPLETELY WITH
FLOWABLE SELECT MATERIAL
FOLLOWING STAGE 3A

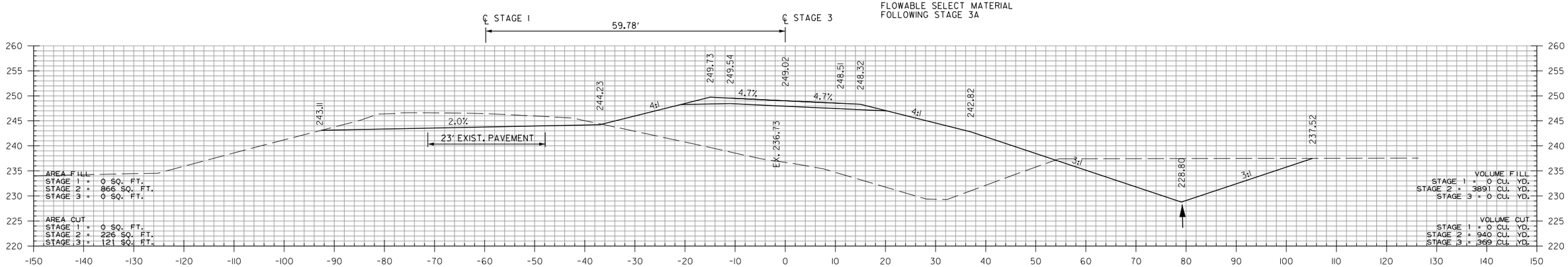

122+00.00

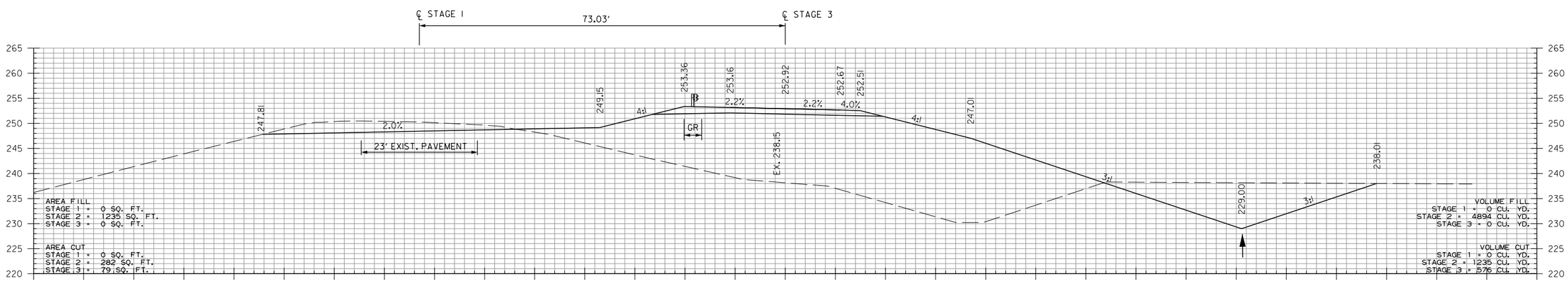

121+00.00

STA. 121+00 TO STA. 122+00

DLTackett 9/2/2022 4:26:24 PM
WORKSPACE: AHTD
L:\20TN\070513\634 - 070513 I-30 Str-Apprs Hwy 51\Drawings\r070513_CX_Hwy_51.dgn
REVISED DATE:

DATE REVISED	DATE FILMED	DATE REVISED	DATE FILMED	FED.RD. DIST.NO.	STATE	FED.AID PROJ.NO.	SHEET NO.	TOTAL SHEETS
				6	ARK.			
				JOB NO.		070513	85	109

(2) CROSS SECTIONS

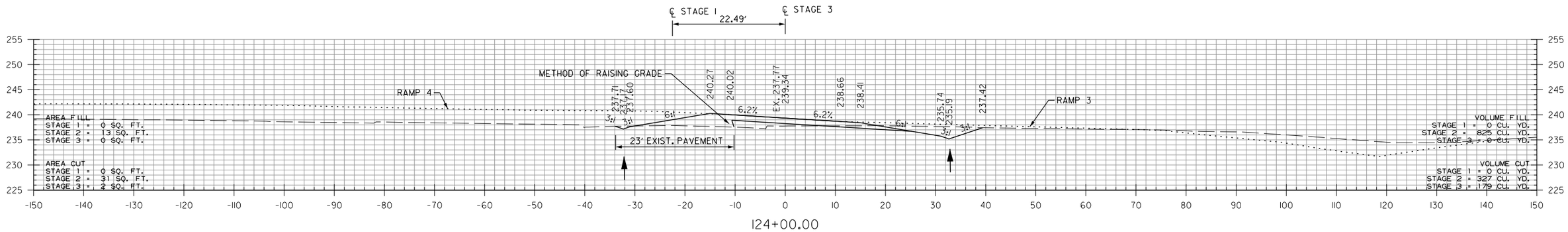

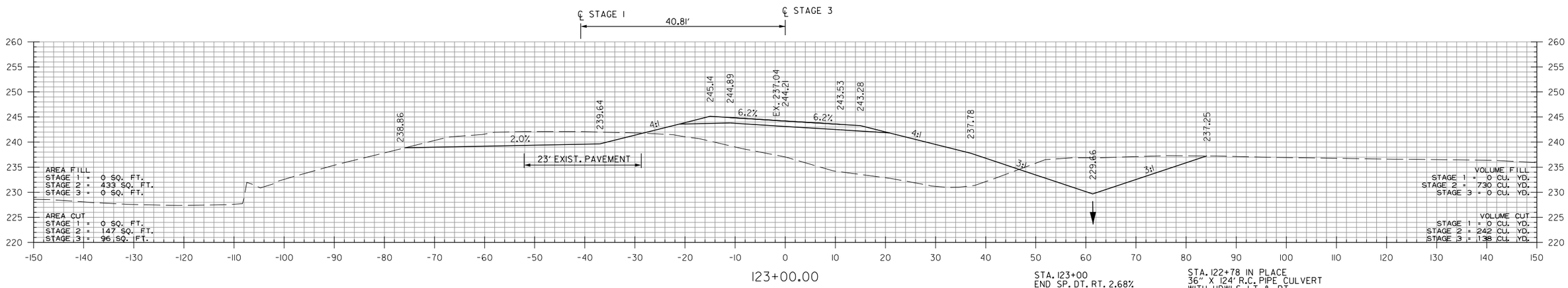

STA. 123+00
END SP. DT. RT. 2.68%
ELEV. 229.66

STA. 122+78 IN PLACE
36" X 124' R.C. PIPE CULVERT
WITH HDWLS. LT. & RT.
REMOVE HDWL. RT. AND
EXTEND R.C. PIPE 44' RT.
TO A COMPLETED LENGTH OF 168'
(CLASS III) (TYPE 3 BEDDING)
W/ F.E.S. RT.
050 = 39 CFS DA= 13.1 ACRES
36" R.C. PIPE = 48 LIN. FT.
36" F.E.S. = 1 EACH

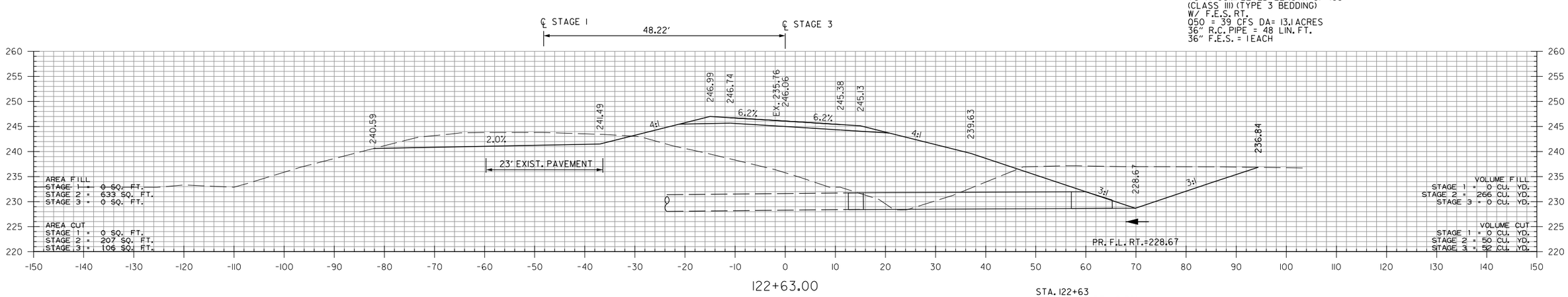

STA. 122+60.88 MAX. SUPERELEVATION (0.062'/')

STA. 122+63
END SP. DT. RT. -0.20%
BEGIN SP. DT. RT. 2.68%
ELEV. 228.67

STA. 122+63 TO STA. 124+00

DLTackett 9/2/2022 4:26:24 PM
WORKSPACE: AHTD
L:\2017\701634 - 070513 I-30 Str-Apprs Hwy 51\Drawings\r070513_CX_Hwy_51.dgn
REVISED DATE:

DATE REVISED	DATE FILMED	DATE REVISED	DATE FILMED	FED.RD. DIST.NO.	STATE	FED.AID PROJ.NO.	SHEET NO.	TOTAL SHEETS
				6	ARK.			
				JOB NO.		070513	86	109
				(2)	CROSS SECTIONS			

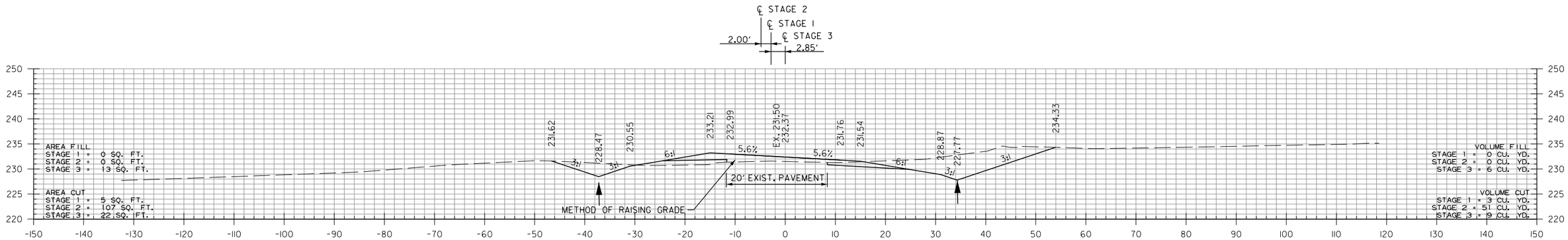

126+00.00

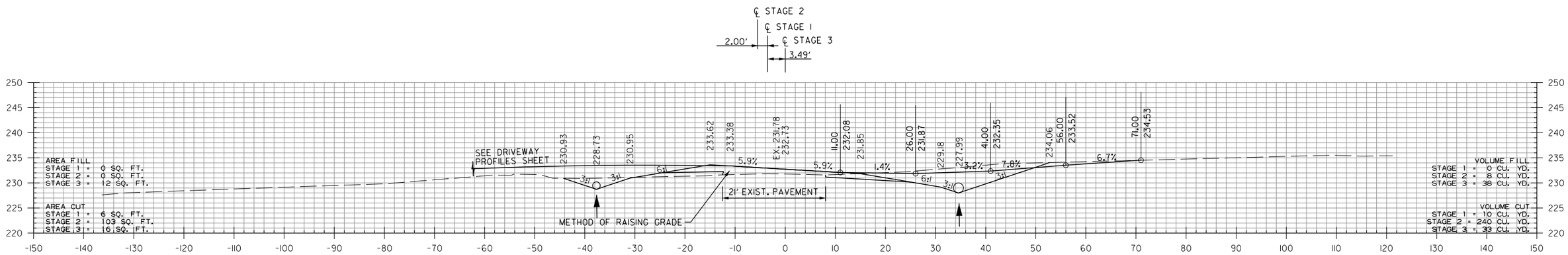

STA. 125+87.00 INSTALL
18" X 45' PIPE CULVERT LT. SIDE DRAIN
CONSRUCT APPROACH = 140 CU. YDS.

STA. 125+50
END SP. DT. LT. -5.33%
BEGIN SP. DT. LT. -2.00%
ELEV. 229.47

125+87.00

STA. 125+75.55 MAX. SUPERELEVATION (0.062'/')

STA. 125+87.00 INSTALL
24" X 41' PIPE CULVERT RT. SIDE DRAIN
CONSRUCT APPROACH = 55 CU. YDS.

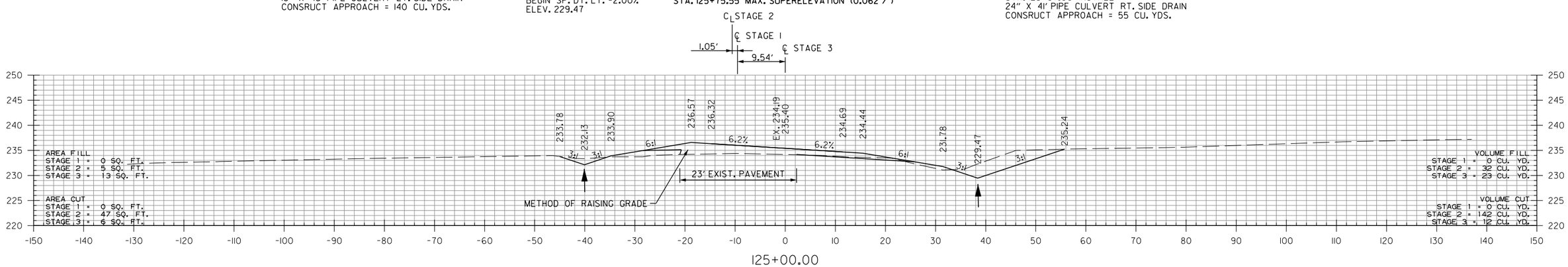

125+00.00

STA. 124+65
BEGIN SP. DT. LT. -5.33%
ELEV. 234.00

STA. 124+50
BEGIN SP. DT. RT. -1.70%
ELEV. 230.32

STA. 125+00 TO STA. 126+00

DLTackett 9/2/2022 4:26:24 PM
WORKSPACE: AHTD
L:\2017\1701634 - 070513 I-30 Str-Apprs Hwy 51\Drawings\r070513_CX_Hwy_51.dgn
REVISED DATE:

DATE REVISED	DATE FILMED	DATE REVISED	DATE FILMED	FED.RD. DIST.NO.	STATE	FED.AID PROJ.NO.	SHEET NO.	TOTAL SHEETS
				6	ARK.			
				JOB NO.		070513	87	109

(2) CROSS SECTIONS

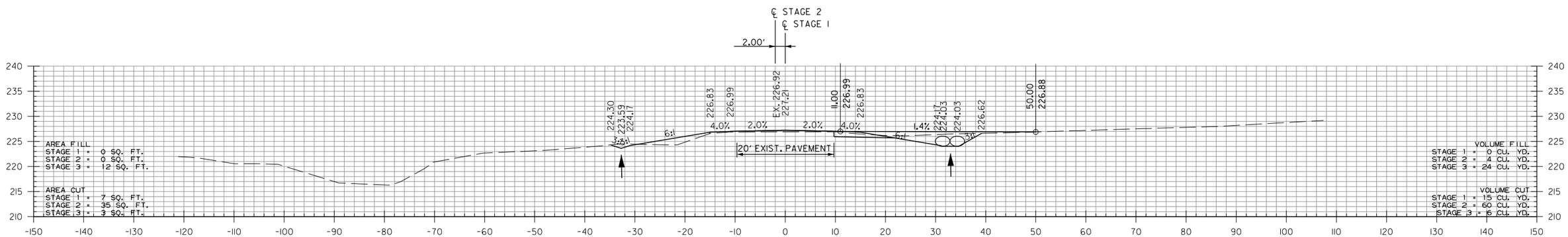

128+44.00

STA. 128+25.55 END SUPERELEVATION

STA. 128+44.00 INSTALL
DBL 28" X 20" X 33' PIPE CULVERT
RT. SIDE DRAIN
CONSRUCT APPROACH = 25 CU. YDS.

STA. 128+10
END SP. DT. RT. -1.70%
BEGIN SP. DT. RT. -0.50%
ELEV. 224.20

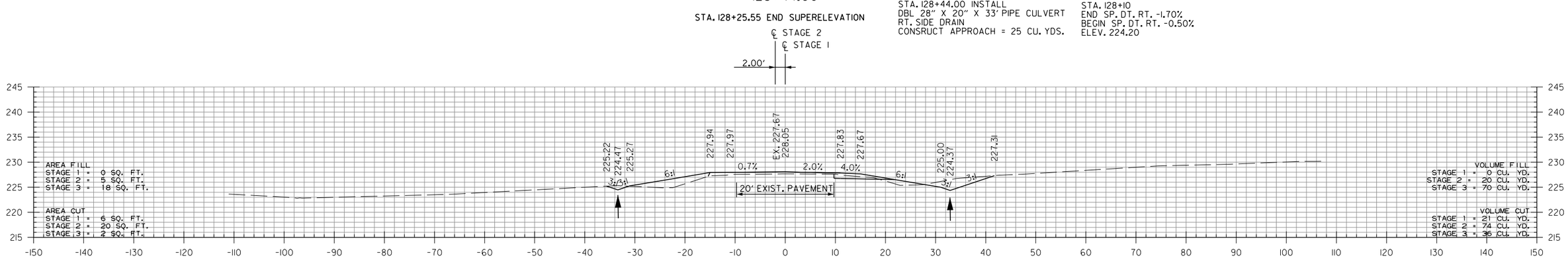

128+00.00

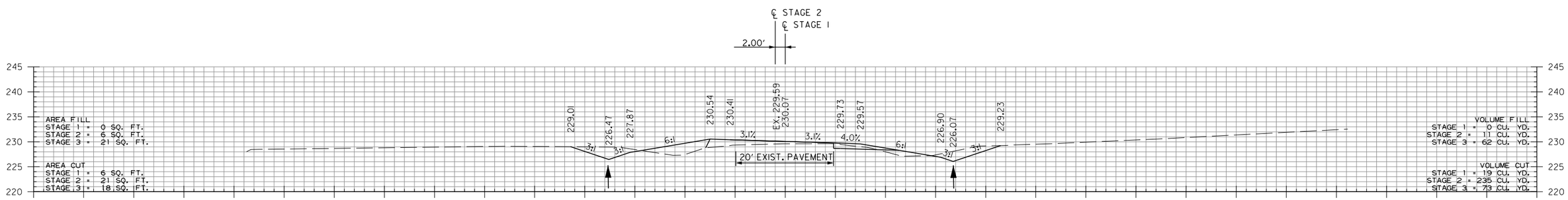

127+00.00

STA. 127+00 TO STA. 128+44

DLTackett 9/2/2022 4:26:25 PM
WORKSPACE: AHTD
L:\2017\170\7634 - 070513 I-30 Str-Apprs Hwy 51\Drawings\r070513_CX_Hwy_51.dgn
REVISED DATE:

DATE REVISED	DATE FILMED	DATE REVISED	DATE FILMED	FED.RD. DIST.NO.	STATE	FED.AID PROJ.NO.	SHEET NO.	TOTAL SHEETS
				6	ARK.			
				JOB NO.		070513	88	109
				(2)	CROSS SECTIONS			

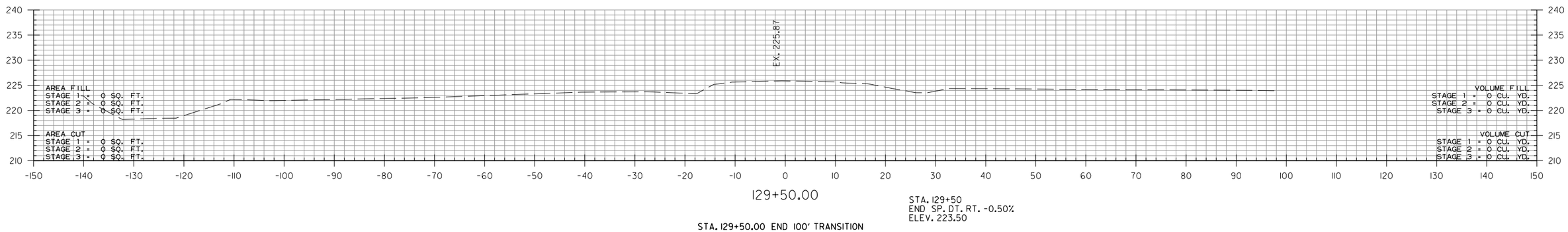

129+50.00

STA. 129+50
END SP. DT. RT. -0.50%
ELEV. 223.50

STA. 129+50.00 END 100' TRANSITION

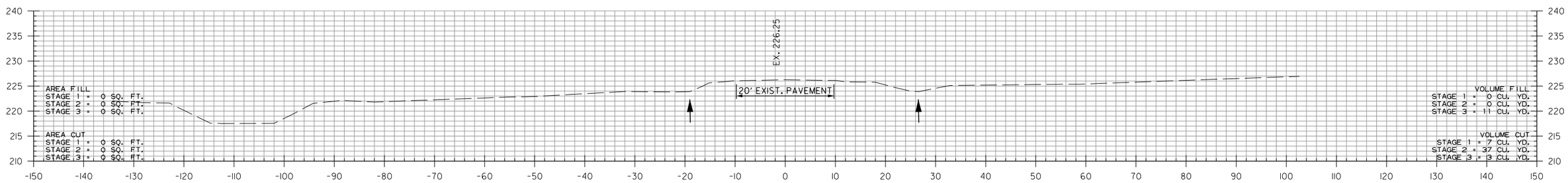

129+00.00

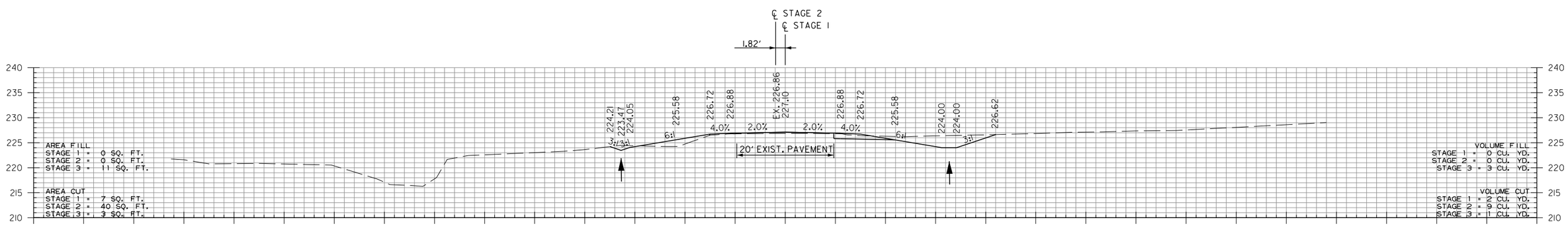

STA. 128+50
END SP. DT. LT. -2.00%
ELEV. 223.47

128+50.00

STA. 128+50.00 END JOB 070513

STA. 128+50 TO STA. 129+50

DLTackett 9/2/2022 4:26:25 PM
WORKSPACE: AHTD
L:\2017\1701634 - 070513 I-30 Str-Apprs Hwy 51\Drawings\r070513_CX_Hwy_51.dgn
REVISED DATE:

DATE REVISED	DATE FILMED	DATE REVISED	DATE FILMED	FED.RD. DIST.NO.	STATE	FED.AID PROJ.NO.	SHEET NO.	TOTAL SHEETS
				6	ARK.			
				JOB NO.		070513	89	109
				(2)	CROSS SECTIONS			

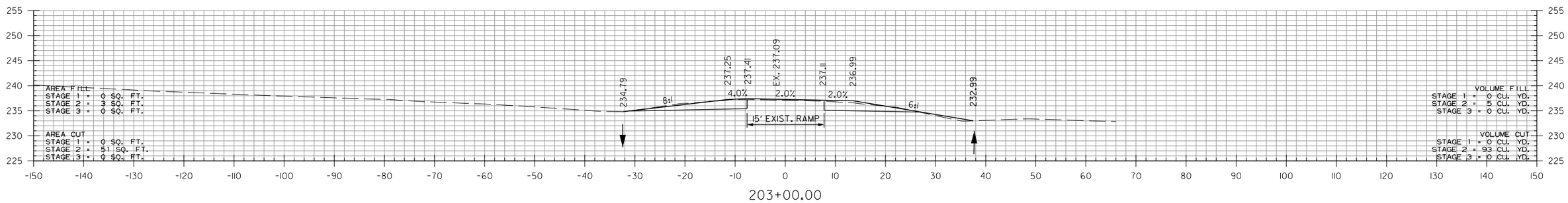

STA. 203+00.00 END 100' TRANSITION

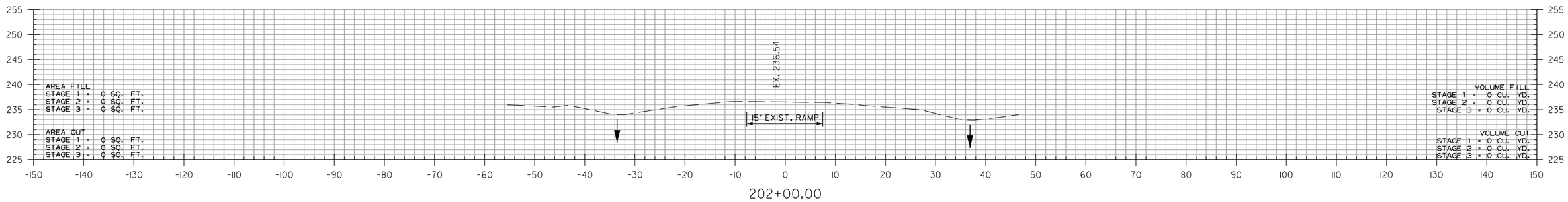

STA. 202+00.00 BEGIN 100' TRANSITION

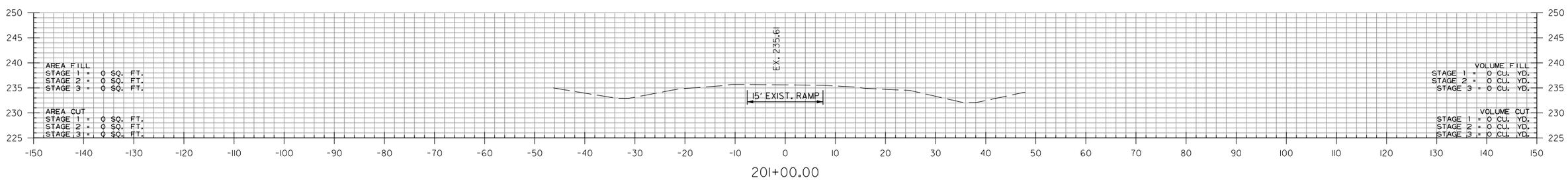

RAMP 1

STA. 201+00 TO STA. 203+00

DLTackett 9/2/2022 4:26:26 PM
WORKSPACE: AHTD
L:\2017\170176 34 - 070513 I-30 Str-Appr's Hwy 51\Drawings\r070513_CX_Ramp 1.dgn
REVISED DATE:

DATE REVISED	DATE FILMED	DATE REVISED	DATE FILMED	FED.RD. DIST.NO.	STATE	FED.AID PROJ.NO.	SHEET NO.	TOTAL SHEETS
				6	ARK.			
				JOB NO.		070513	90	109
				(2)	CROSS SECTIONS			

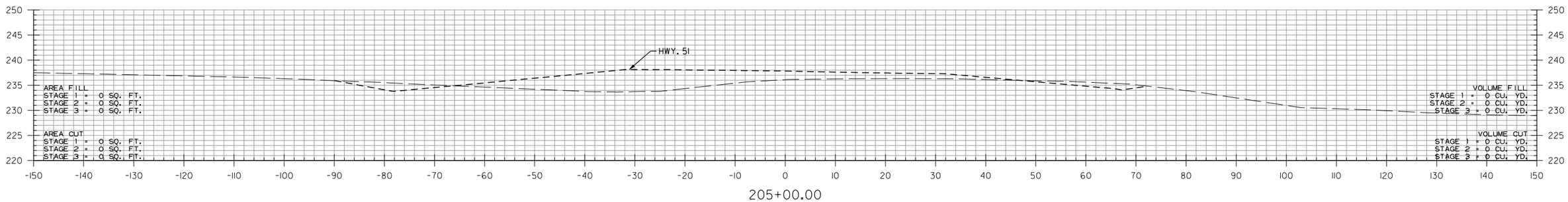

205+00.00

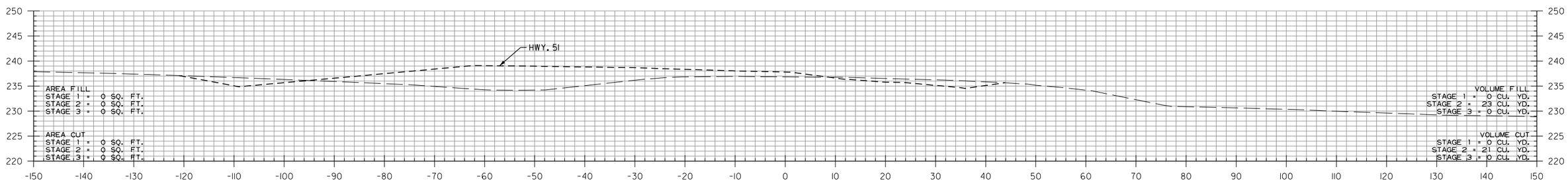

204+83.50

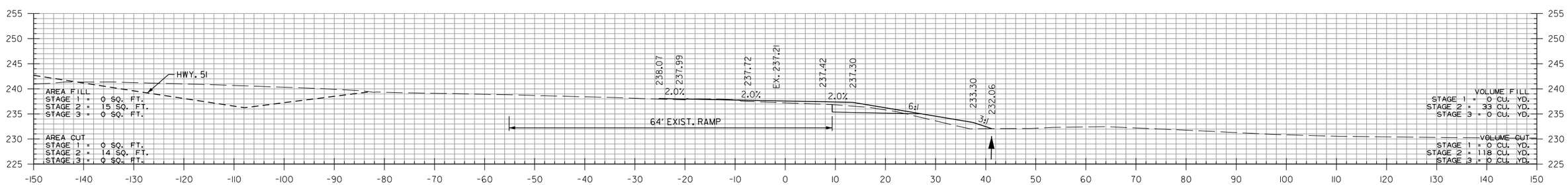

204+00.00

RAMP I

STA. 204+00 TO STA. 205+00

DLTackett 9/2/2022 4:26:40 PM
WORKSPACE: AHTD
L:\2017\1701634 - 070513 I-30 Str-Apprs Hwy 51\Drawings\r070513_CX_Ramp I.dgn
REVISED DATE:

DATE REVISED	DATE FILMED	DATE REVISED	DATE FILMED	FED.RD. DIST.NO.	STATE	FED.AID PROJ.NO.	SHEET NO.	TOTAL SHEETS
				6	ARK.			
				JOB NO.		070513	91	109
				(2)	CROSS SECTIONS			

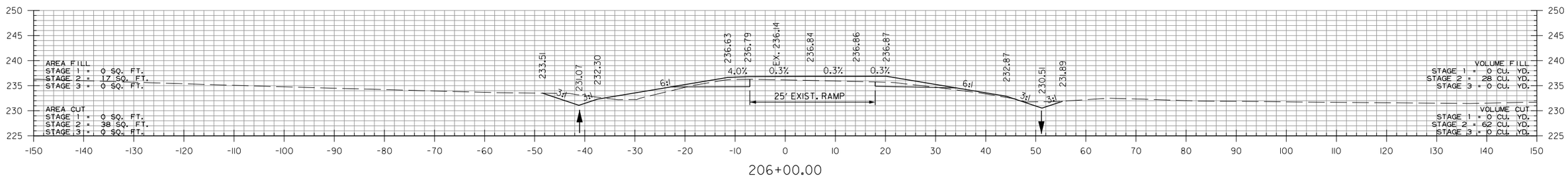

STA. 205+44
BEGIN SP. DT. LT. -1.24%
ELEV. 231.77

STA. 205+60
BEGIN SP. DT. RT. 0.91%
ELEV. 230.15

STA. 205+42.46 BEGIN SUPERELEVATION

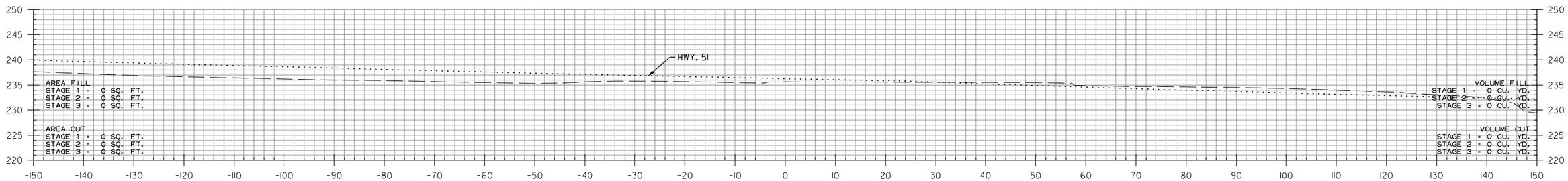

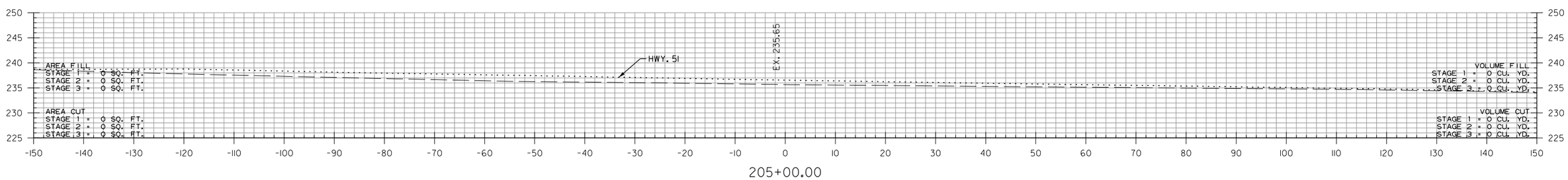

RAMP 2
STA. 205+00 TO STA. 206+00

DLTackett 9/2/2022 4:26:43 PM
WORKSPACE: AHTD
L:\2017\170176 34 - 070513 I-30 Str-Apprs Hwy 51\Drawings\r070513_CX_Ramp 2.dgn
REVISED DATE:

DATE REVISED	DATE FILMED	DATE REVISED	DATE FILMED	FED.RD. DIST.NO.	STATE	FED.AID PROJ.NO.	SHEET NO.	TOTAL SHEETS
				6	ARK.			
				JOB NO.		070513	92	109
				(2)	CROSS SECTIONS			

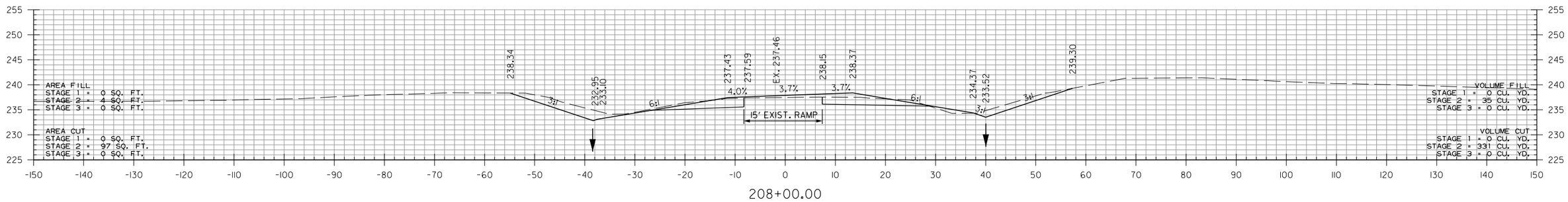

STA. 207+42.46 MAX. SUPERELEVATION (0.060'/')

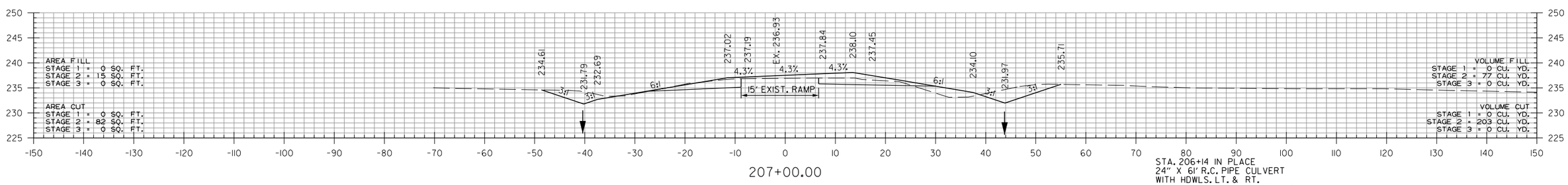

STA. 206+14 IN PLACE
24" X 61' R.C. PIPE CULVERT
WITH HDWLS. LT. & RT.
REMOVE HDWLS. LT. & RT. AND
EXTEND R.C. PIPE 11' LT. & 2' RT.
TO A COMPLETED LENGTH OF 74'
(CLASS III) (TYPE 3 BEDDING)
W/ F.E.S. LT. & RT.
Q50 = 11 CFS DA= 3.2 ACRES
24" R.C. PIPE = 21 LIN. FT.
24" F.E.S. = 2 EACH

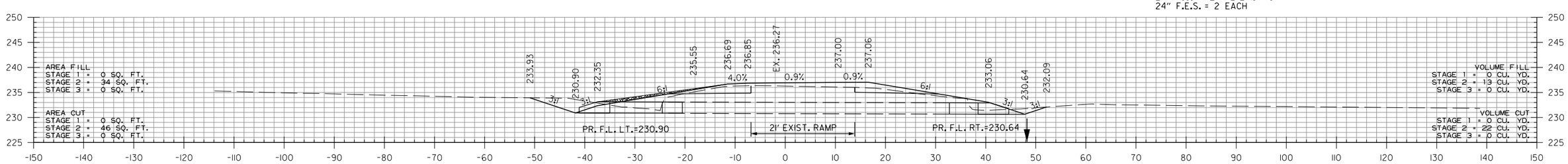

STA. 206+14
END SP. DT. LT. -1.24%
BEGIN SP. DT. LT. 1.04%
ELEV. 230.90

STA. 206+14
END SP. DT. RT. 0.91%
BEGIN SP. DT. RT. 1.55%
ELEV. 230.64

RAMP 2

STA. 206+14 TO STA. 208+00

DLTackett 9/2/2022 4:26:44 PM
WORKSPACE: AHTD
L:\2017\17017634 - 070513 I-30 Str-Apprs Hwy 51\Drawings\r070513_CX_Ramp 2.dgn
REVISED DATE:

DATE REVISED	DATE FILMED	DATE REVISED	DATE FILMED	FED.RD. DIST.NO.	STATE	FED.AID PROJ.NO.	SHEET NO.	TOTAL SHEETS
				6	ARK.			
				JOB NO.		070513	93	109
				(2)	CROSS SECTIONS			

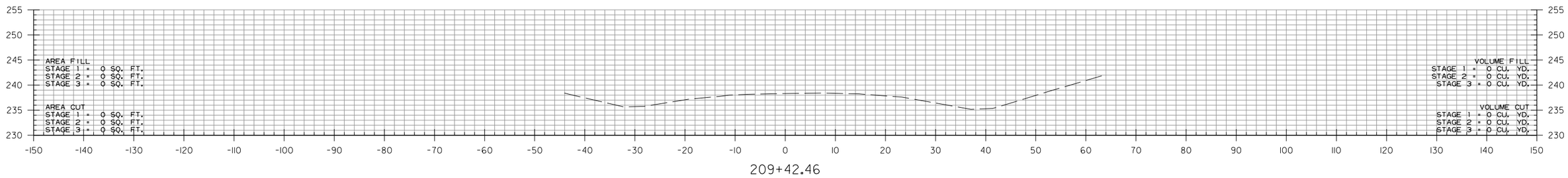

209+42.46

STA. 209+42.46 END 100' TRANSITION

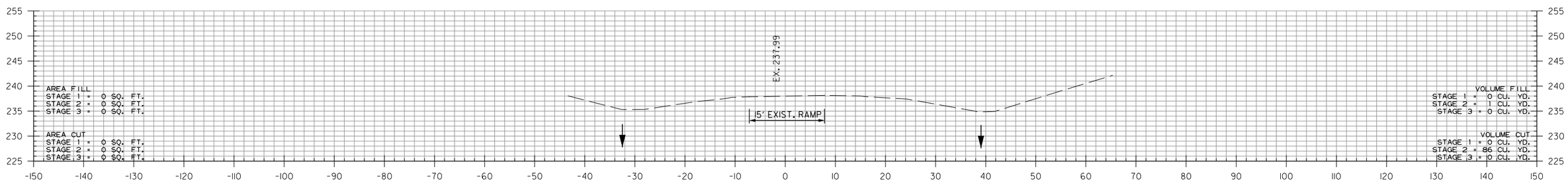

209+00.00

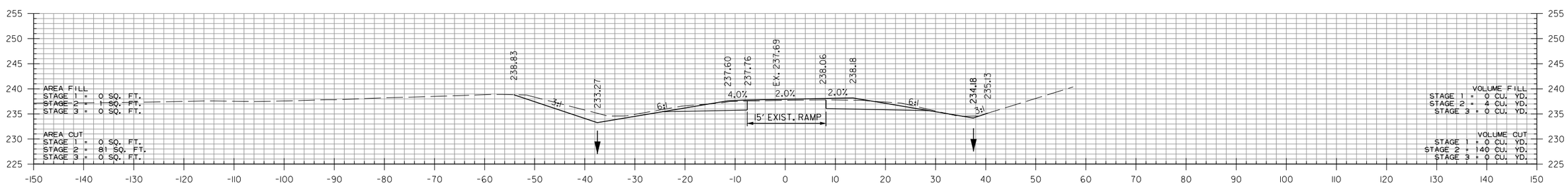

STA. 208+42.46
END SP. DT. LT. 1.04%
ELEV. 233.27

208+42.46

STA. 208+42.46
END SP. DT. RT. 1.55%
ELEV. 234.18

STA. 208+42.46 BEGIN 100' TRANSITION

STA. 208+42.46 END SUPERELEVATION (0.020'/') R.C. (MATCH EXISTING)

RAMP 2

STA. 208+42 TO STA. 209+42

DLTackett 9/2/2022 4:26:44 PM
WORKSPACE: AHTD
L:\2017\1701634 - 070513 I-30 Str-Apprs Hwy 51\Drawings\r070513_CX_Ramp 2.dgn
REVISED DATE:

DATE REVISED	DATE FILMED	DATE REVISED	DATE FILMED	FED.RD. DIST.NO.	STATE	FED.AID PROJ.NO.	SHEET NO.	TOTAL SHEETS
				6	ARK.			
				JOB NO.		070513	94	109

(2) CROSS SECTIONS

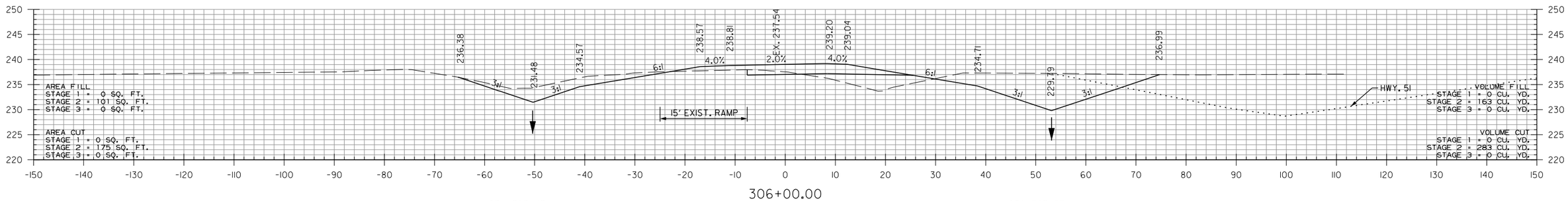

306+00.00

STA. 305+45
BEGIN SP. DT. LT. 2.11%
ELEV. 230.32

STA. 305+95
BEGIN SP. DT. RT. 2.69%
ELEV. 229.66

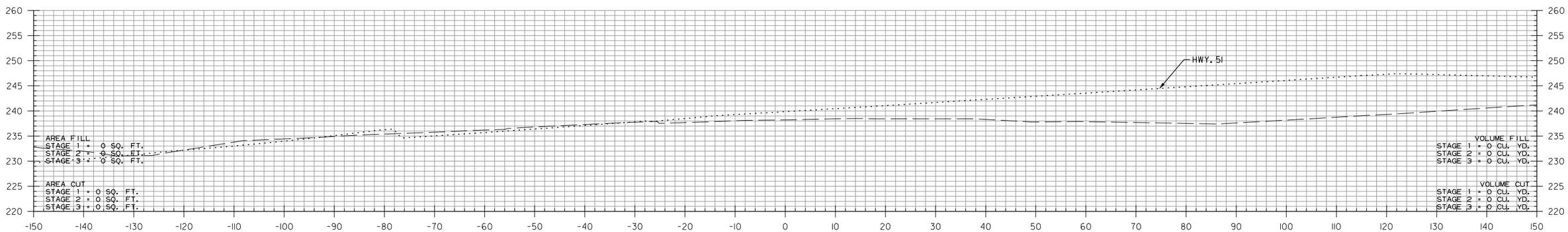

305+12.69

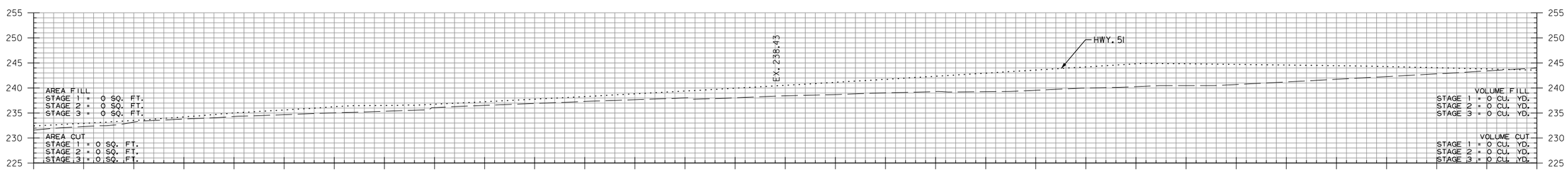

305+00.00

RAMP 3

STA. 305+00 TO STA. 306+00

DLTackett 9/2/2022 4:26:45 PM
WORKSPACE: AHTD
L:\2017\170763 4 - 070513 I-30 Str-Apprs Hwy 51\Drawings\r070513_CX_Ramp 3.dgn
REVISED DATE:

DATE REVISED	DATE FILMED	DATE REVISED	DATE FILMED	FED.RD. DIST.NO.	STATE	FED.AID PROJ.NO.	SHEET NO.	TOTAL SHEETS
				6	ARK.			
				JOB NO.		070513	95	109
				(2)	CROSS SECTIONS			

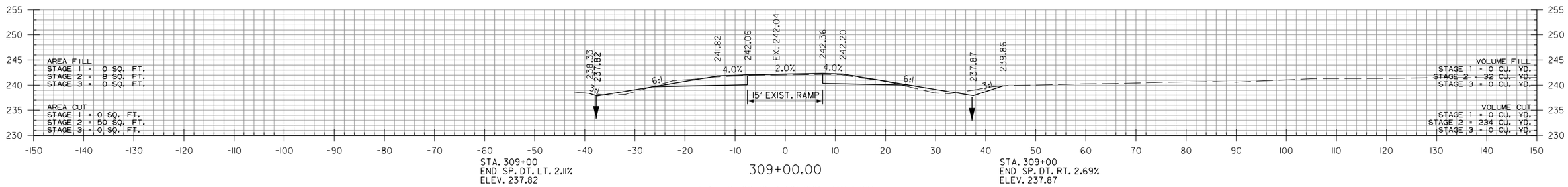

STA. 309+00.00 BEGIN 100' TRANSITION

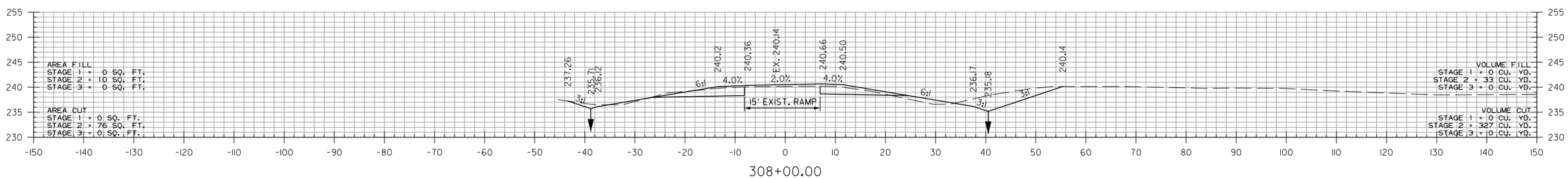

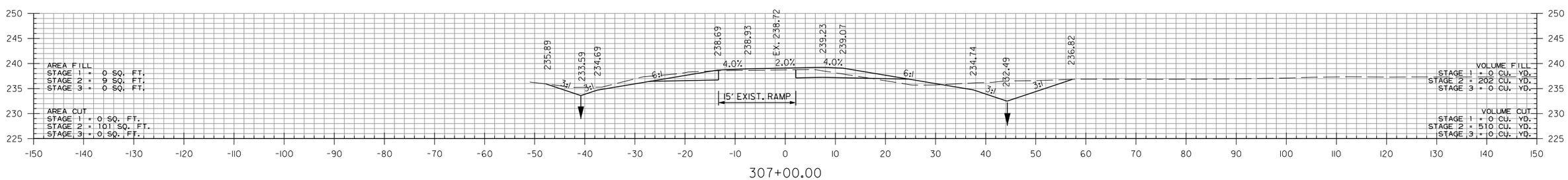

RAMP 3

STA. 307+00 TO STA. 309+00

DLTackett 9/2/2022 4:26:45 PM
WORKSPACE: AHTD
L:\2017\170176\34 - 070513 I-30 Str-Apprs Hwy 51\Drawings\r070513_CX_Ramp 3.dgn
REVISED DATE:

DATE REVISED	DATE FILMED	DATE REVISED	DATE FILMED	FED.RD. DIST.NO.	STATE	FED.AID PROJ.NO.	SHEET NO.	TOTAL SHEETS
				6	ARK.			
				JOB NO.		070513	96	109
				2	CROSS SECTIONS			

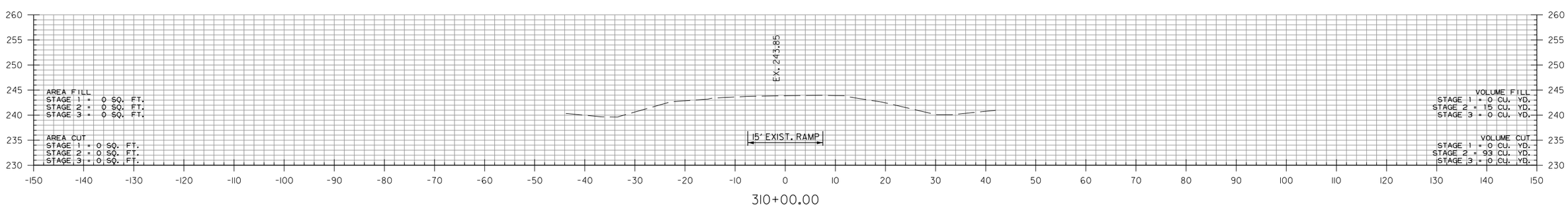

STA. 310+00.00 END 100' TRANSITION

RAMP 3

STA. 310+00 TO STA. 310+00

DLTackett 9/2/2022 4:26:45 PM
WORKSPACE: AHTD
L:\2017\170176 34 - 070513 I-30 Str-Apprs Hwy 51\Drawings\r070513_CX_Ramp 3.dgn
REVISED DATE:

DATE REVISED	DATE FILMED	DATE REVISED	DATE FILMED	FED.RD. DIST.NO.	STATE	FED.AID PROJ.NO.	SHEET NO.	TOTAL SHEETS
				6	ARK.			
				JOB NO.		070513	97	109
				(2)	CROSS SECTIONS			

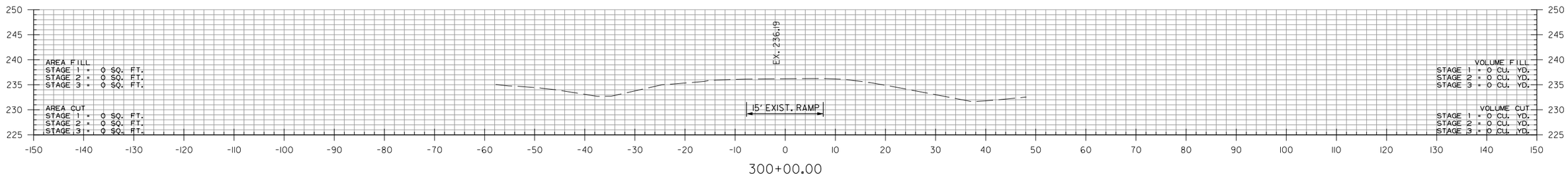

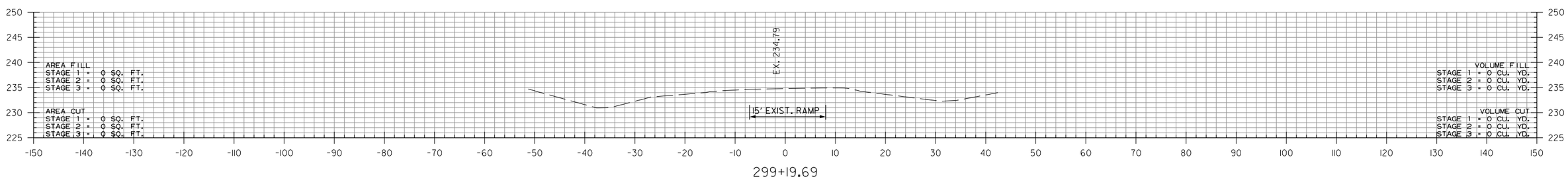

STA. 299+19.69 BEGIN 100' TRANSITION

RAMP 4

STA. 299+00 TO STA. 300+00

DLTackett 9/2/2022 4:26:46 PM
WORKSPACE: AHTD
L:\2017\170176 34 - 070513 I-30 Str-Apprs Hwy 51\Drawings\r070513_CX_Ramp 4.dgn
REVISED DATE:

DATE REVISED	DATE FILMED	DATE REVISED	DATE FILMED	FED.RD. DIST.NO.	STATE	FED.AID PROJ.NO.	SHEET NO.	TOTAL SHEETS
				6	ARK.			
				JOB NO.		070513	98	109

(2) CROSS SECTIONS

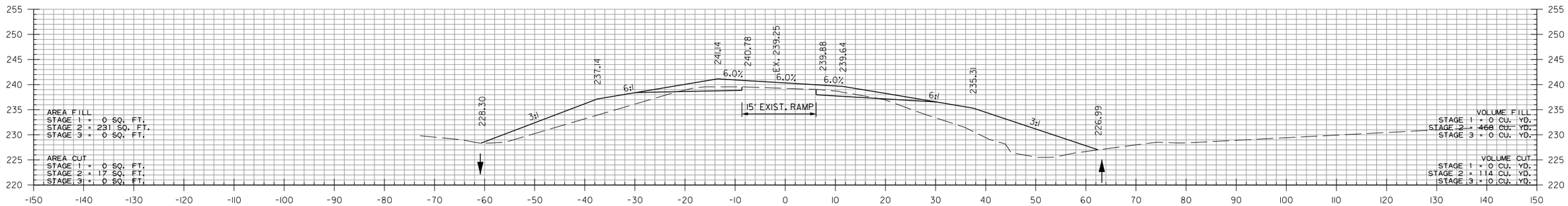

302+00.00

STA. 301+84.69 MAX. SUPERELEVATION (0.066'/')

STA. 301+48 IN PLACE
36" X 126' R.C. PIPE CULVERT
WITH HDWLS. LT. & RT.
REMOVE HDWL. RT. AND
EXTEND R.C. PIPE 13' RT.
TO A COMPLETED LENGTH OF 139'
(CLASS III) (TYPE 3 BEDDING)
W/ F.E.S. RT.
050 = 45 CFS DA= 16.8 ACRES
36" R.C. PIPE = 17 LIN. FT.
36" F.E.S. = 1EACH

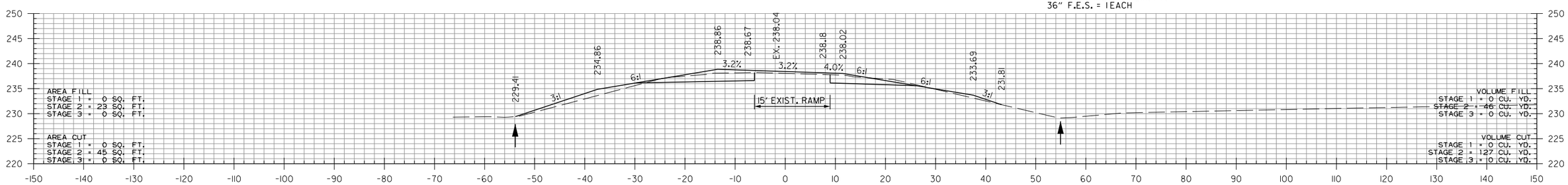

301+00.00

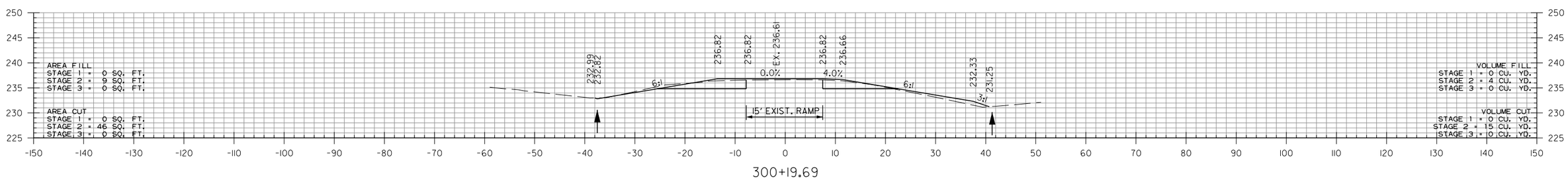

300+19.69

STA. 300+19.69 BEGIN SUPERELEVATION (0.000'/') (MATCH EXISTING)

STA. 300+19.69 END 100' TRANSITION

RAMP 4

STA. 300+20 TO STA. 302+00

DLTackett 9/2/2022 4:26:46 PM
WORKSPACE: AHTD
L:\2017\1701634 - 070513 I-30 Str-Apprs Hwy 51\Drawings\r070513_CX_Ramp 4.dgn
REVISED DATE:

DATE REVISED	DATE FILMED	DATE REVISED	DATE FILMED	FED.RD. DIST.NO.	STATE	FED.AID PROJ.NO.	SHEET NO.	TOTAL SHEETS
				6	ARK.			
				JOB NO.		070513	99	109

(2) CROSS SECTIONS

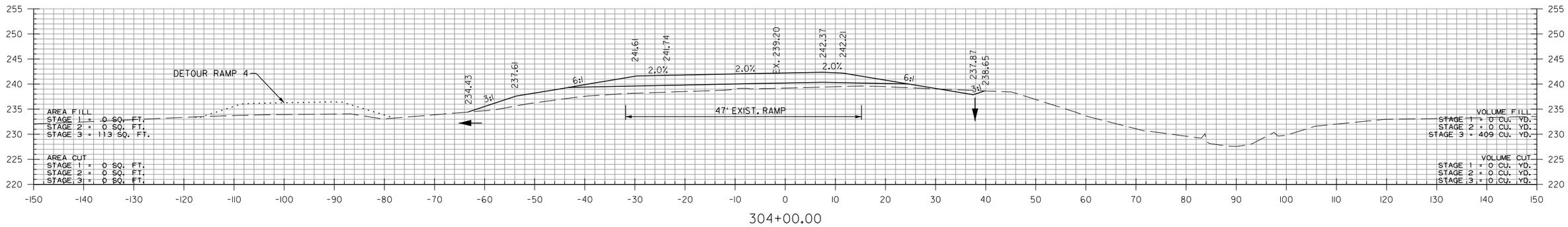

STA. 303+99.69 END SUPERELEVATION

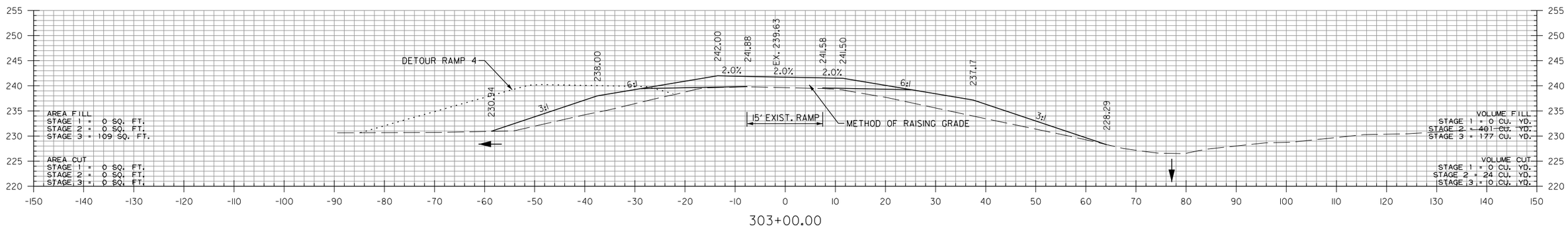

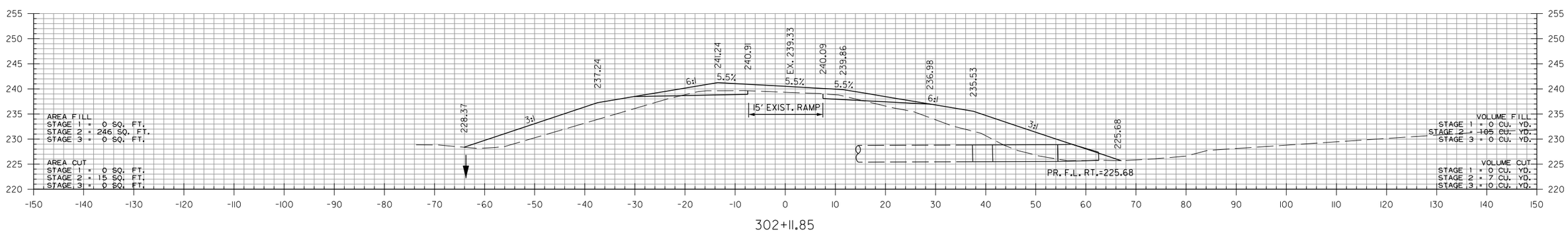

RAMP 4

STA. 302+12 TO STA. 304+00

DLTackett 9/2/2022 4:26:46 PM
WORKSPACE: AHTD
L:\20171\70171634 - 070513 I-30 Str-Apprs Hwy 5\Drawings\r070513_CX_Ramp 4.dgn
REVISED DATE:

DATE REVISED	DATE FILMED	DATE REVISED	DATE FILMED	FED.RD. DIST.NO.	STATE	FED.AID PROJ.NO.	SHEET NO.	TOTAL SHEETS
				6	ARK.			
				JOB NO.		070513	100	109
				(2)	CROSS SECTIONS			

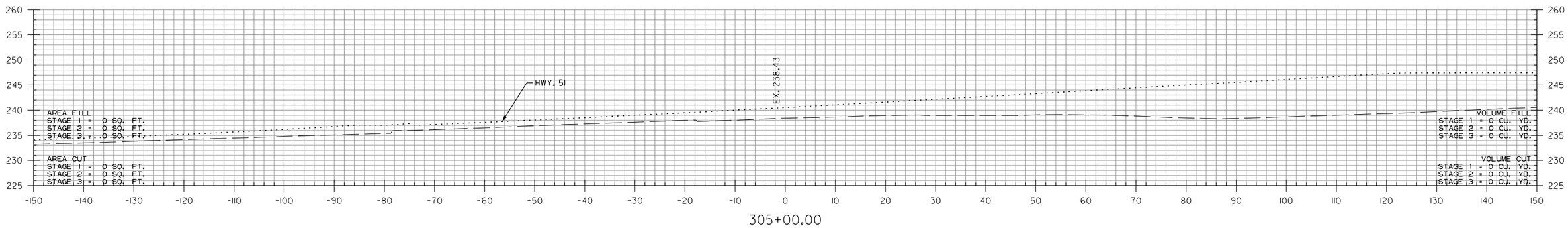

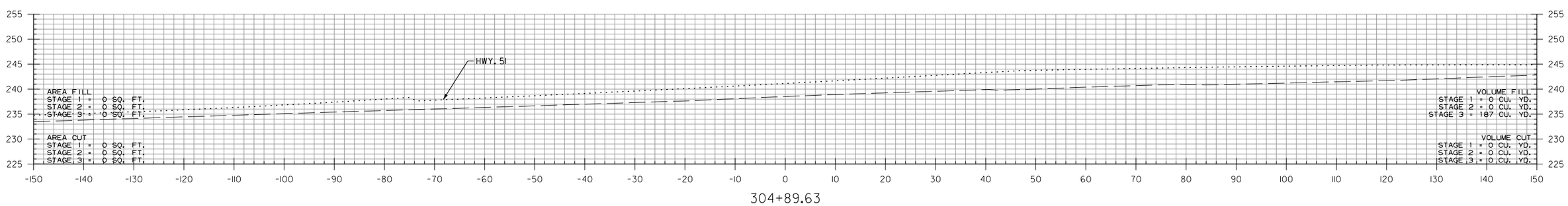

RAMP 4

STA. 304+90 TO STA. 305+00

DLTackett 9/2/2022 4:26:47 PM
WORKSPACE: AHTD
L:\20IT\IT01634 - 070513 I-30 Str-Apprs Hwy 51\Drawings\r070513.CX_Ramp 4.dgn
REVISED DATE:

DATE REVISED	DATE FILMED	DATE REVISED	DATE FILMED	FED.RD. DIST.NO.	STATE	FED.AID PROJ.NO.	SHEET NO.	TOTAL SHEETS
				6	ARK.			
				JOB NO.		070513	101	109
				(2)	CROSS SECTIONS			

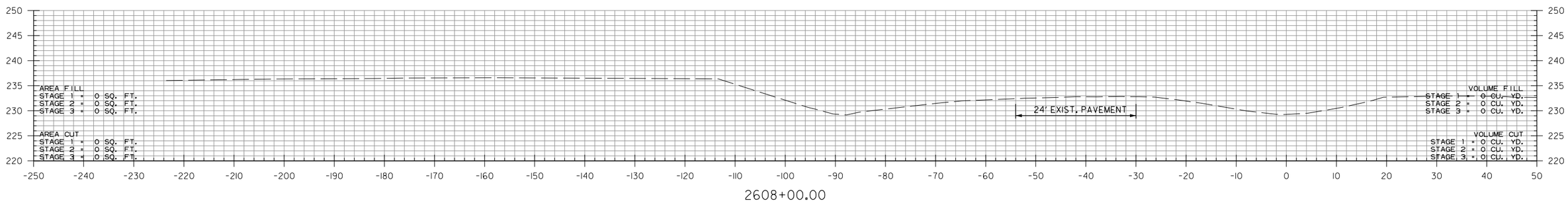

I-30 WESTBOUND
STA. 2608+00 TO STA. 2608+00

DLTackett 9/2/2022 4:26:48 PM
WORKSPACE: AHTD
L:\2017\1701634 - 070513 I-30 Str-Apprs Hwy 5\Drawings\r070513.CX.I-30.dgn
REVISED DATE:

DATE REVISED	DATE FILMED	DATE REVISED	DATE FILMED	FED.RD. DIST.NO.	STATE	FED.AID PROJ.NO.	SHEET NO.	TOTAL SHEETS
				6	ARK.			
				JOB NO.		070513	102	109

(2) CROSS SECTIONS

STA. 2611+25
END SP. DT. LT. 0.85%
BEGIN SP. DT. LT. -0.54%
ELEV. 232.06

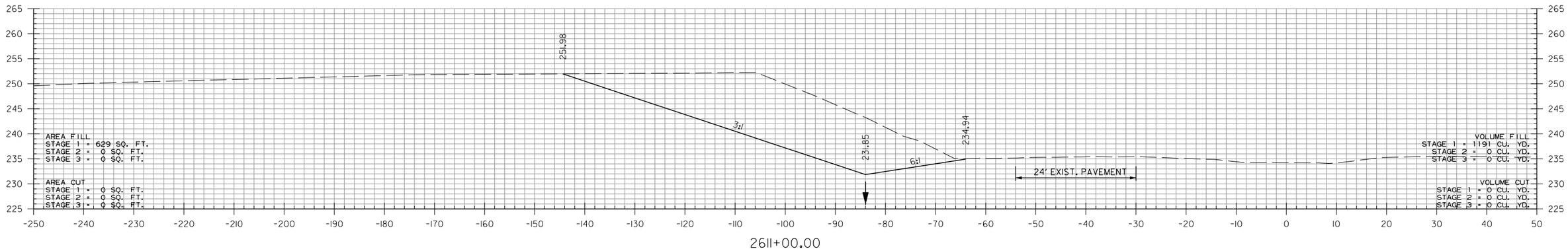

2611+00.00

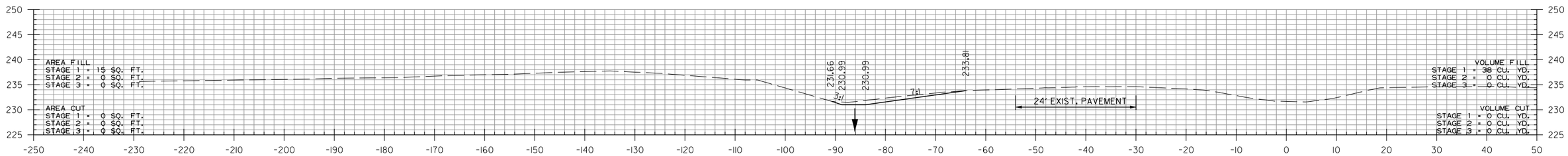

2610+00.00

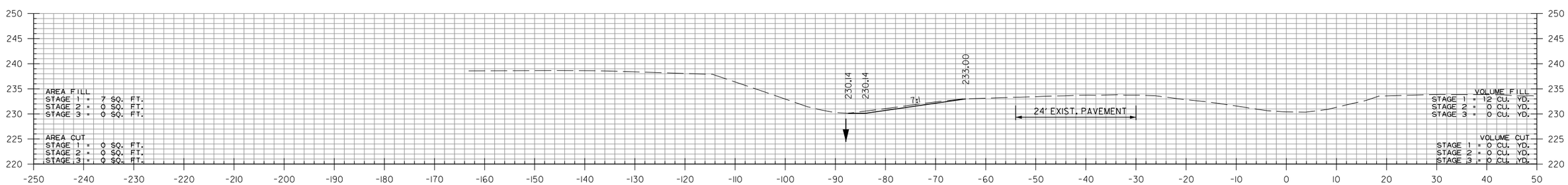

2609+00.00

STA. 2609+00
BEGIN SP. DT. LT. 0.85%
ELEV. 230.14

I-30 WESTBOUND
STA. 2609+00 TO STA. 2611+00

DLTackett 9/2/2022 4:26:48 PM
WORKSPACE: AHTD
L:\2017\170176\34 - 070513 I-30 Str-Appr's Hwy 51\Drawings\r070513_CX_I-30.dgn
REVISED DATE:

DATE REVISED	DATE FILMED	DATE REVISED	DATE FILMED	FED.RD. DIST.NO.	STATE	FED.AID PROJ.NO.	SHEET NO.	TOTAL SHEETS
				6	ARK.			
				JOB NO.		070513	103	109

(2) CROSS SECTIONS

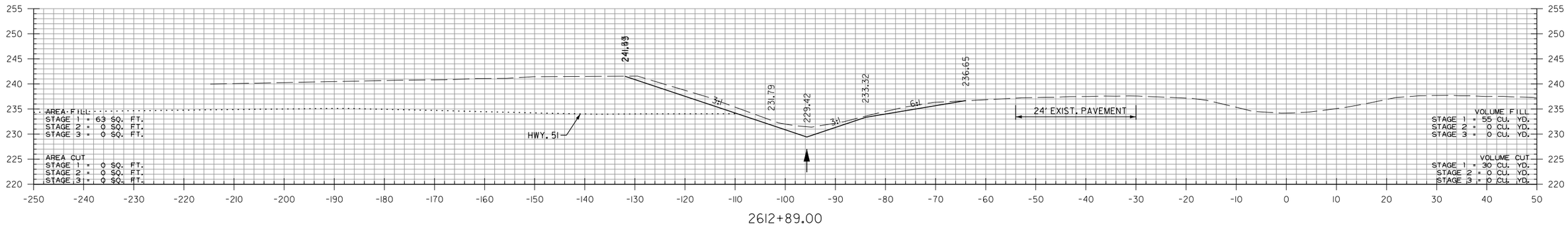

2612+89.00

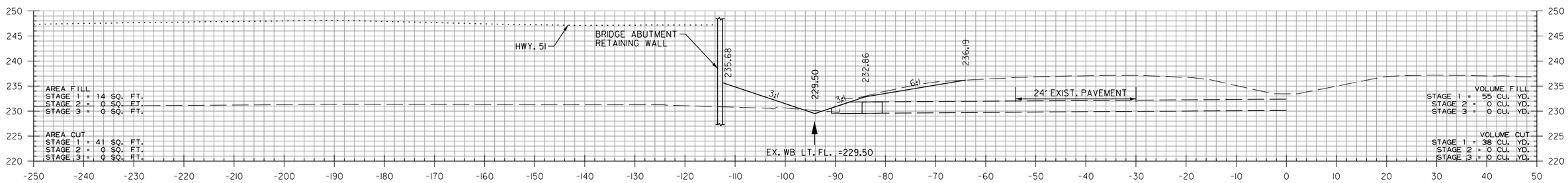

STA. 2612+50 WESTBOUND I-30 IN PLACE
24" X 88' R.C. PIPE CULVERT
WITH HDWL. LT.
REMOVE HDWL. LT. AND
REMOVE R.C. PIPE 4' LT.
TO A COMPLETED LENGTH OF 84'
(CLASS III) (TYPE 3 BEDDING)
W/ F.E.S. LT.
Q50 = 17 CFS DA= 4.4 ACRES
24" R.C. PIPE = 4 LIN. FT.
24" F.E.S. = 1EACH

2612+50.00

STA. 2612+50
END SP. DT. LT. -9.98%
BEGIN SP. DT. LT. -0.20%
ELEV. 229.50

STA. 2612+30
END SP. DT. LT. -0.54%
BEGIN SP. DT. LT. -9.98%
ELEV. 231.50

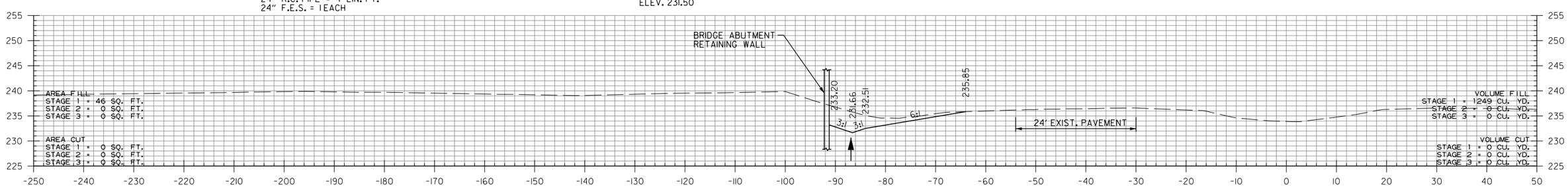

2612+00.00

I-30 WESTBOUND
STA. 2612+00 TO STA. 2612+89

DLTackett 9/2/2022 4:26:49 PM
WORKSPACE: AHTD
L:\2017\1701634 - 070513 I-30 Str-Apprs Hwy 51\Drawings\r070513_CX_I-30.dgn
REVISED DATE:

DATE REVISED	DATE FILMED	DATE REVISED	DATE FILMED	FED.RD. DIST.NO.	STATE	FED.AID PROJ.NO.	SHEET NO.	TOTAL SHEETS
				6	ARK.			
				JOB NO.		070513	104	109
				(2)	CROSS SECTIONS			

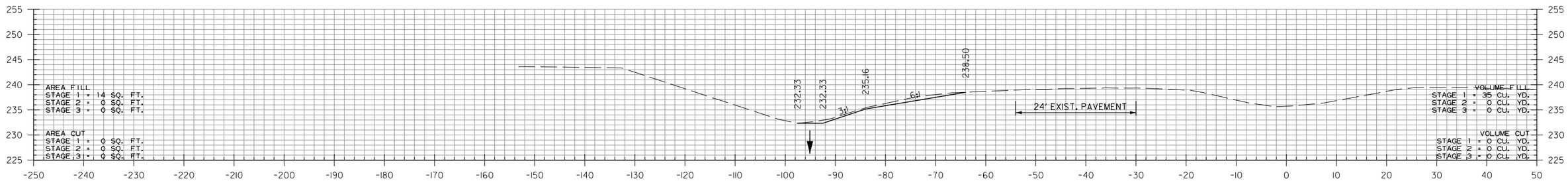

2614+50.00

STA. 2614+50
END SP. DT. LT. 2.00%
ELEV. 232.33

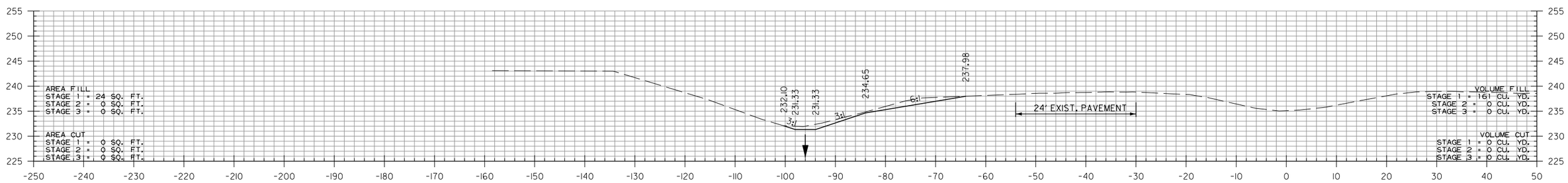

2614+00.00

STA. 2613+03
END SP. DT. LT. -0.20%
BEGIN SP. DT. LT. 2.00%
ELEV. 229.39

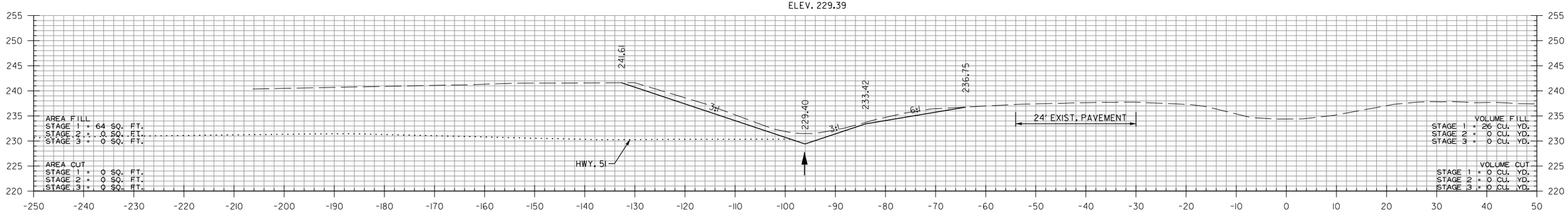

2613+00.00

I-30 WESTBOUND
STA. 2613+00 TO STA. 2614+50

DLTackett 9/2/2022 4:26:49 PM
WORKSPACE: AHTD
L:\201\701634 - 070513 I-30 Str-Apprs Hwy 51\Drawings\r070513.CX.I-30.dgn
REVISED DATE:

DATE REVISED	DATE FILMED	DATE REVISED	DATE FILMED	FED.RD. DIST.NO.	STATE	FED.AID PROJ.NO.	SHEET NO.	TOTAL SHEETS
				6	ARK.			
				JOB NO.		070513	105	109
				2	CROSS SECTIONS			

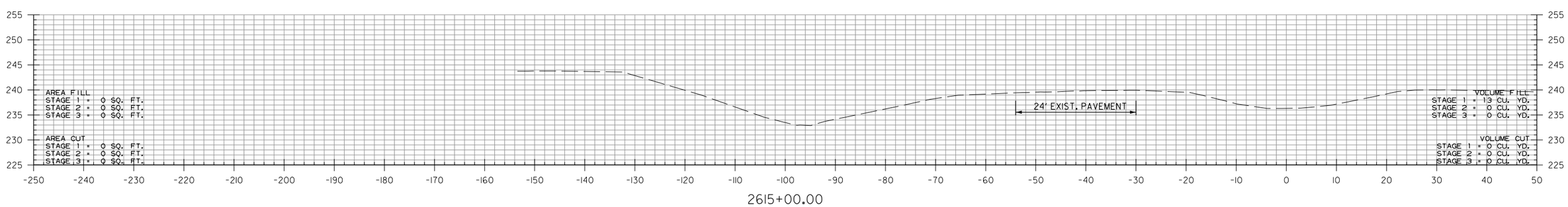

I-30 WESTBOUND
STA. 2615+00 TO STA. 2615+00

DLTackett 9/2/2022 4:26:49 PM
WORKSPACE: AHTD
L:\2017\170176\34 - 070513 I-30 Str-Apprs Hwy 51\Drawings\r070513_CX_I-30.dgn
REVISED DATE:

DATE REVISED	DATE FILMED	DATE REVISED	DATE FILMED	FED.RD. DIST.NO.	STATE	FED.AID PROJ.NO.	SHEET NO.	TOTAL SHEETS
				6	ARK.			
				JOB NO.		070513	106	109
				(2)	CROSS SECTIONS			

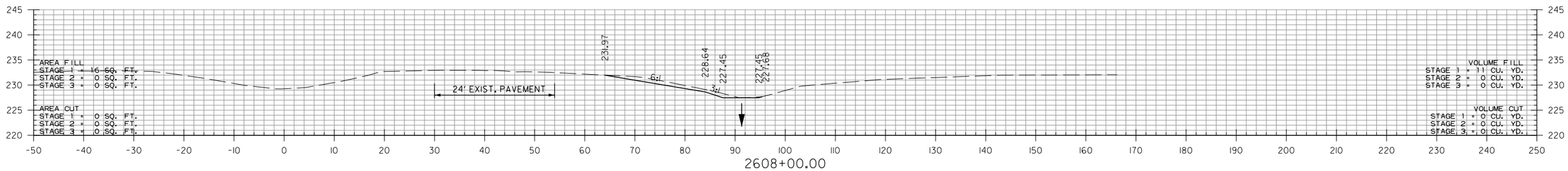

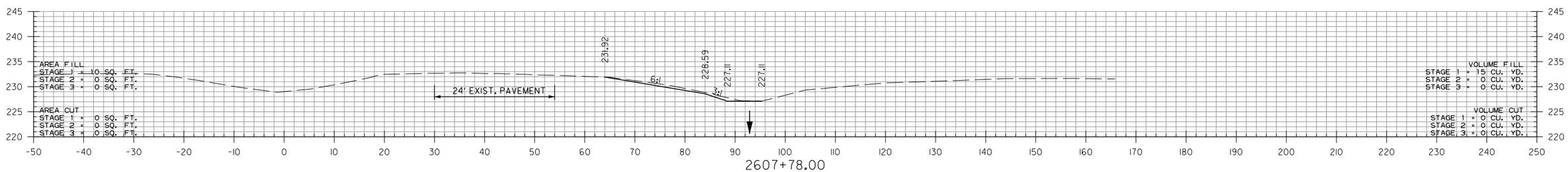

STA. 2607+78
BEGIN SP. DT. RT. 1.55%
ELEV. 227.11

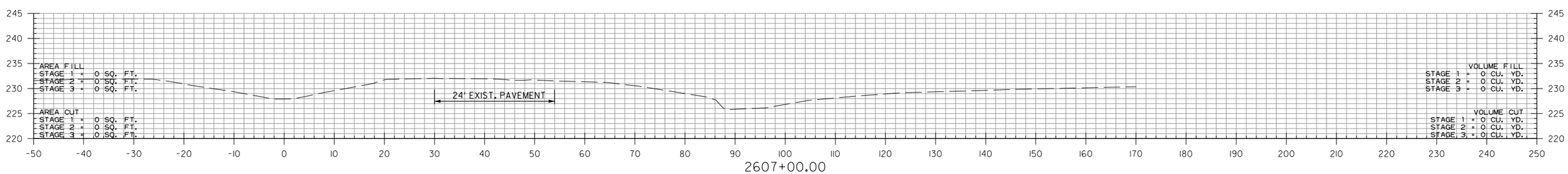

I-30 EASTBOUND
STA. 2607+00 TO STA. 2608+00

DLTackett 9/2/2022 4:47:32 PM
WORKSPACE: AHTD
L:\2017\1701634 - 070513 I-30 Str-Apprs Hwy 51\Drawings\r070513_CX_I-30.dgn
REVISED DATE:

DATE REVISED	DATE FILMED	DATE REVISED	DATE FILMED	FED.RD. DIST.NO.	STATE	FED.AID PROJ.NO.	SHEET NO.	TOTAL SHEETS
				6	ARK.			
				JOB NO.		070513	107	109

(2) CROSS SECTIONS

STA. 2611+25
END SP. DT. RT. 1.55%
BEGIN SP. DT. RT. -1.04%
ELEV. 232.50

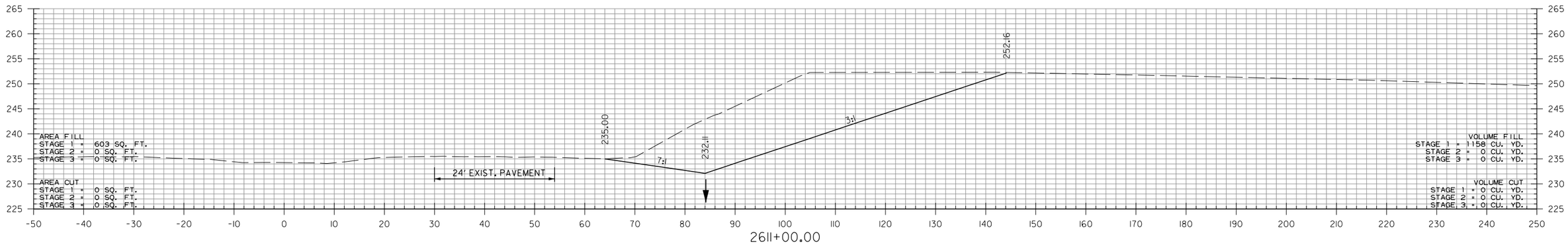

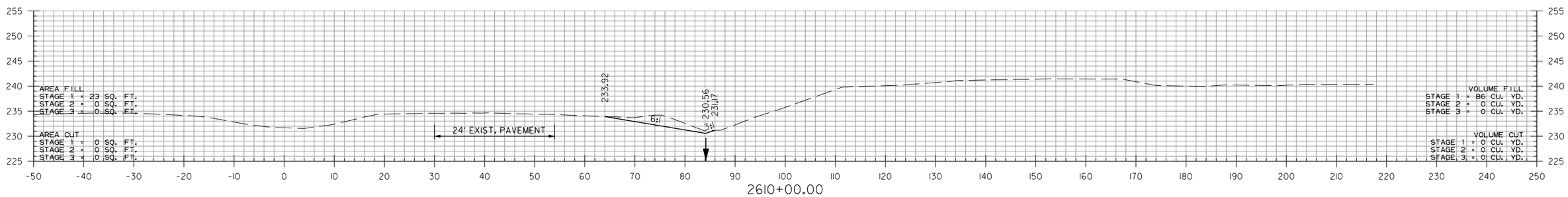

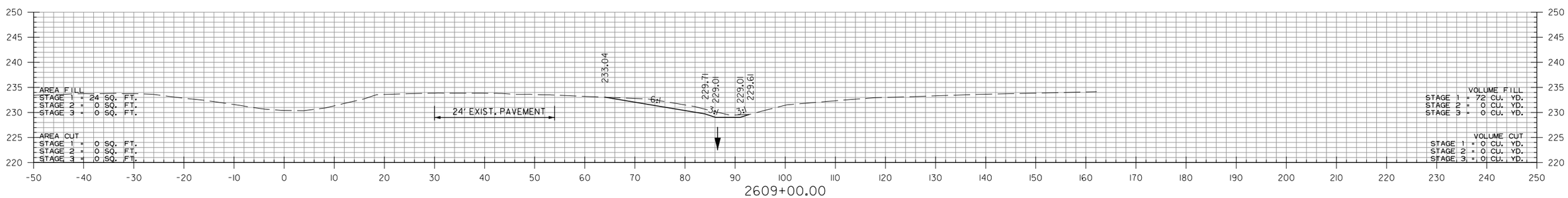

I-30 EASTBOUND
STA. 2609+00 TO STA. 2611+00

DLTackett 9/2/2022 4:26:50 PM
WORKSPACE: AHTD
L:\207\1701634 - 070513 I-30 Str-Apprs Hwy 51\Drawings\r070513_CX_I-30.dgn
REVISED DATE:

DATE REVISED	DATE FILMED	DATE REVISED	DATE FILMED	FED.RD. DIST.NO.	STATE	FED.AID PROJ.NO.	SHEET NO.	TOTAL SHEETS
				6	ARK.			
				JOB NO.		070513	108	109

(2) CROSS SECTIONS

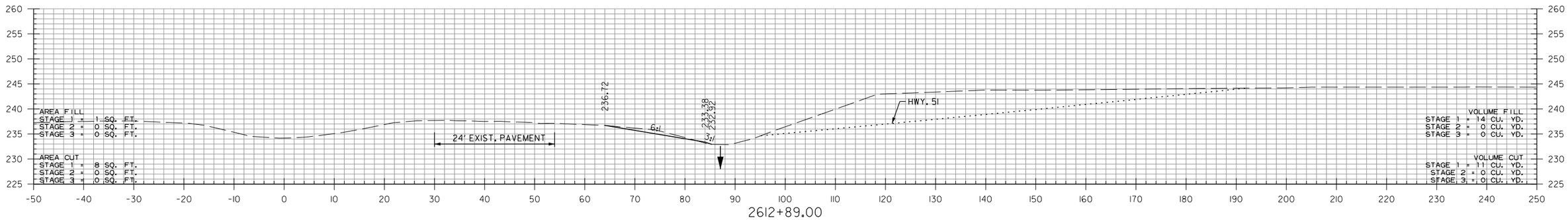

STA. 2612+85
END SP. DT. RT. 7.09%
ELEV. 232.79

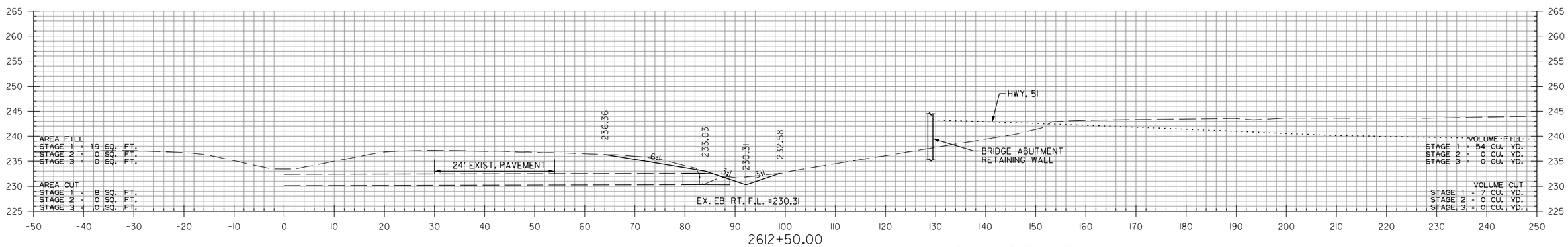

STA. 2612+50
END SP. DT. RT. -5.50%
BEGIN SP. DT. RT. 7.09%
ELEV. 230.31

STA. 2612+30
END SP. DT. RT. -1.04%
BEGIN SP. DT. RT. -5.50%
ELEV. 231.41

STA. 2612+50 EASTBOUND I-30 IN PLACE
24" X 83' R.C. PIPE CULVERT
WITH HDWL. RT.
REMOVE HDWL. RT.
(CLASS III) (TYPE 3 BEDDING)
W/ F.E.S. RT.
Q50 = 13 CFS DA= 3.7 ACRES
24" R.C. PIPE = 4 LIN. FT.
24" F.E.S. = 1 EACH

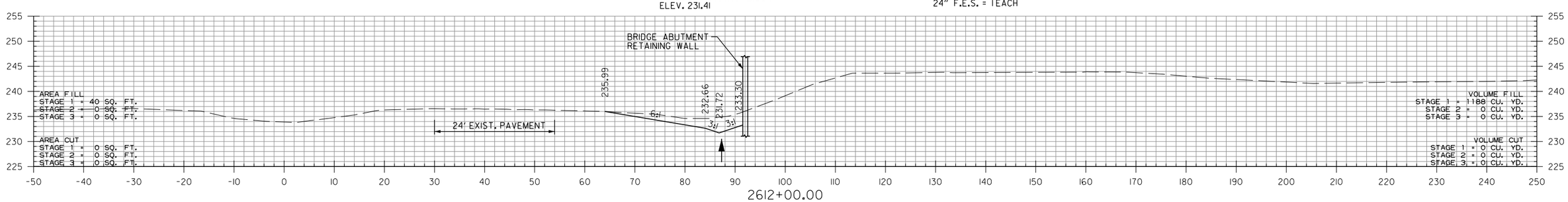

I-30 EASTBOUND
STA. 2612+00 TO STA. 2612+89

DLTackett 9/2/2022 4:26:50 PM
WORKSPACE: AHTD
L:\2017\1701634 - 070513 I-30 Str-Apprs Hwy 51\Drawings\r070513.CX.I-30.dgn
REVISED DATE:

DATE REVISED	DATE FILMED	DATE REVISED	DATE FILMED	FED.RD. DIST.NO.	STATE	FED.AID PROJ.NO.	SHEET NO.	TOTAL SHEETS
				6	ARK.			
				JOB NO.		070513	109	109
				2	CROSS SECTIONS			

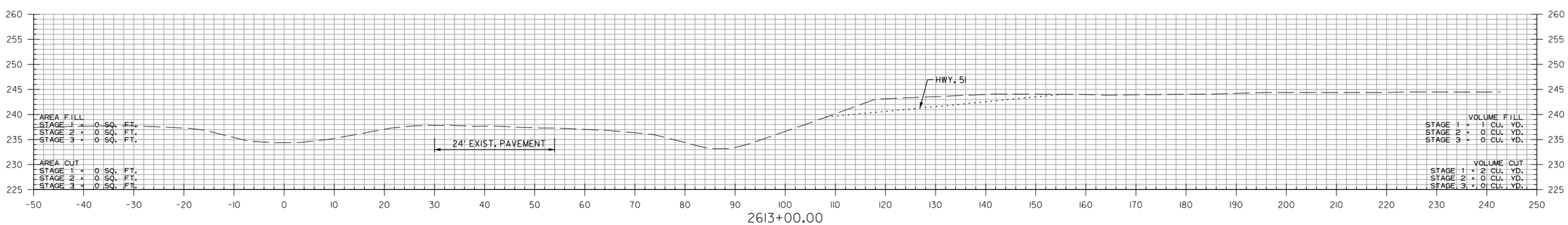

I-30 EASTBOUND
STA. 2613+00 TO STA. 2613+00

DLTackett 9/2/2022 4:26:51 PM
WORKSPACE: AHTD
L:\2017\1701634 - 070513 I-30 Str-Appr's Hwy 51\Drawings\r070513_CX_I-30.dgn
REVISED DATE:

DATE REVISED	DATE FILMED	DATE REVISED	DATE FILMED	FED. ROAD DIST. NO.	STATE	FED. AID PROJ. NO.	SHEET NO.	TOTAL SHEETS
				6	ARK.			
				JOB NO.				
				1	CONCRETE RIPRAP 55002			

Note:
Sloped surfaces of concrete riprap to be marked off into blocks (construction joints optional) with an approved grooving tool, spacing the grooved lines about 5' apart.

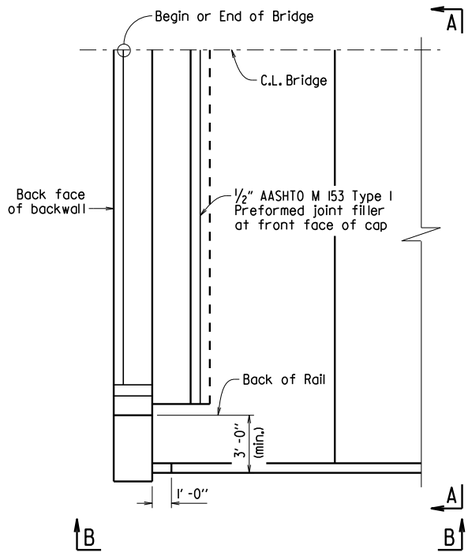

PLAN OF CONCRETE RIPRAP PERPENDICULAR TO WING
1/4" = 1'-0"

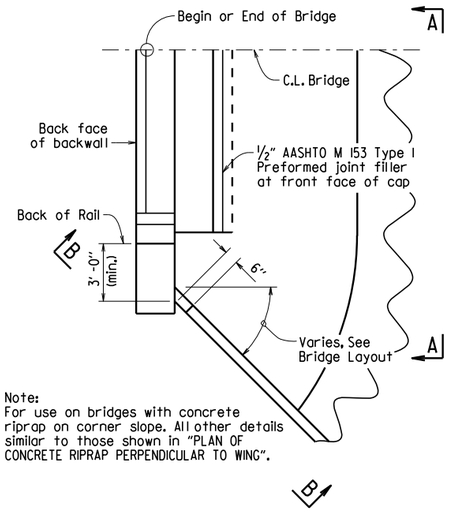

Note:
For use on bridges with concrete riprap on corner slope. All other details similar to those shown in "PLAN OF CONCRETE RIPRAP PERPENDICULAR TO WING".

PLAN OF CONCRETE RIPRAP AT ANGLE TO WING
1/4" = 1'-0"

Note:
For use on bridges with turned back wings. All other details similar to those shown in "PLAN OF CONCRETE RIPRAP PERPENDICULAR TO WING".

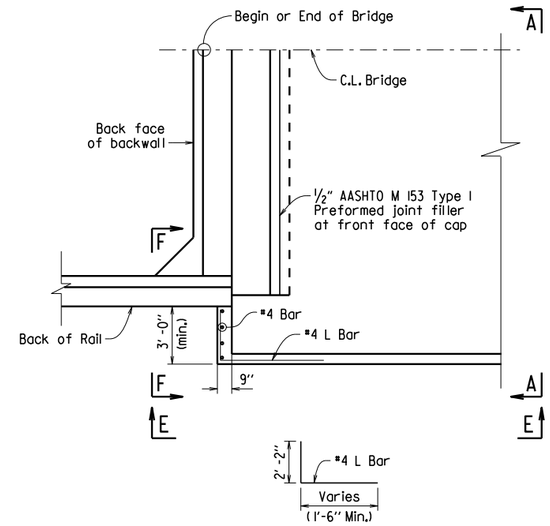

PLAN OF CONCRETE RIPRAP PERPENDICULAR TO TURNED BACK WING
1/4" = 1'-0"

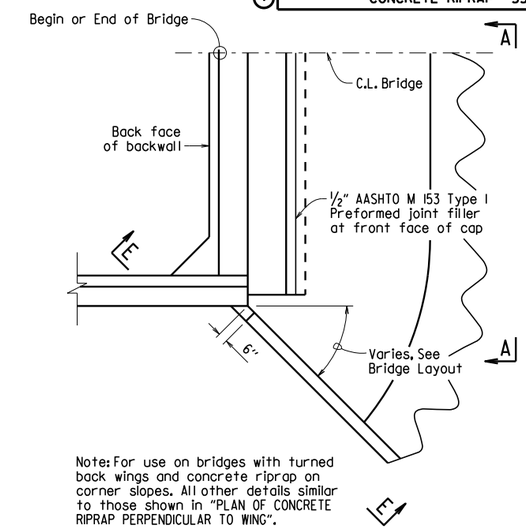

Note: For use on bridges with turned back wings and concrete riprap on corner slopes. All other details similar to those shown in "PLAN OF CONCRETE RIPRAP PERPENDICULAR TO WING".

PLAN OF CONCRETE RIPRAP AT ANGLE FROM TURNED BACK WING
1/4" = 1'-0"

Note:
Wing is shown perpendicular to concrete riprap. Details are similar when wing is at an angle to riprap.

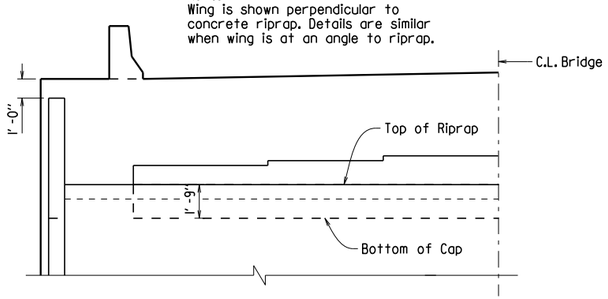

VIEW A-A
1/4" = 1'-0"

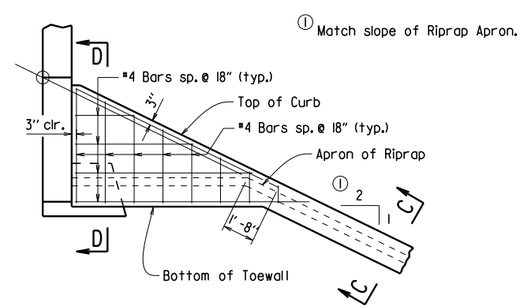

VIEW B-B
1/4" = 1'-0"

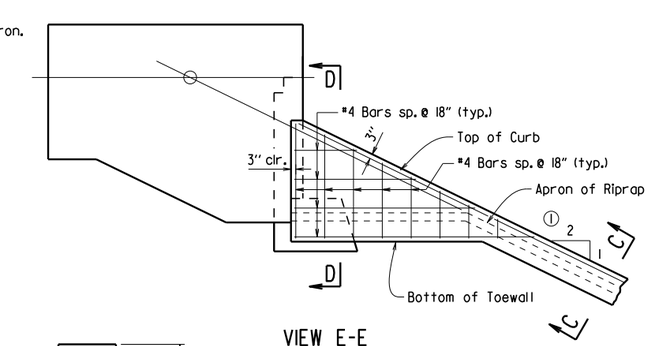

VIEW E-E
1/4" = 1'-0"

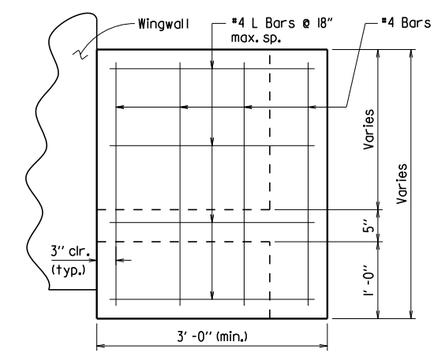

VIEW F-F
1" = 1'-0"

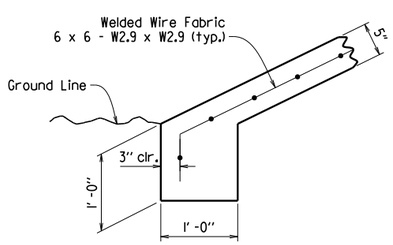

TOE OF CONCRETE RIPRAP
1" = 1'-0"

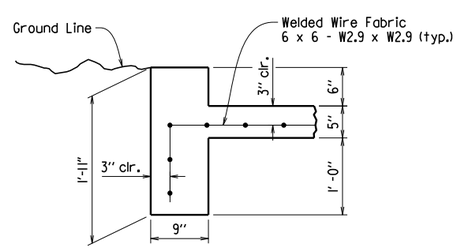

SECTION C-C
1" = 1'-0"

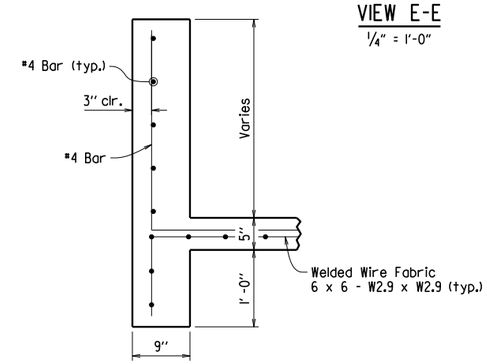

SECTION D-D
1" = 1'-0"

GENERAL NOTES

All concrete shall be Class A with a minimum compressive strength, f'c = 2,100 psi.

Welded wire fabric shall conform to AASHTO M55 or M221.

STANDARD DETAILS FOR CONCRETE RIPRAP

ARKANSAS STATE HIGHWAY COMMISSION

LITTLE ROCK, ARK.

DRAWN BY:	ACP	DATE:	2/27/2014	FILENAME:	b55002.dgn
CHECKED BY:	BEF	DATE:	2/27/2014	SCALE:	AS SHOWN
DESIGNED BY:	Std.	DATE:	---		

DRAWING NO. 55002

DATE REVISED	DATE FILMED	DATE REVISED	DATE FILMED	FED. ROAD DIST. NO.	STATE	FED. AID PROJ. NO.	SHEET NO.	TOTAL SHEETS
				6	ARK.			
				JOB NO.				
				1		GENERAL NOTES	55006	

GENERAL NOTES

These GENERAL NOTES are applicable unless otherwise shown in the Plan Details, Special Provisions, or Supplemental Specifications.

CONSTRUCTION SPECIFICATIONS: Arkansas State Highway and Transportation Department Standard Specifications for Highway Construction (2014 Edition) with applicable Supplemental Specifications and Special Provisions. Section and Subsection refer to the Standard Specifications.

DESIGN SPECIFICATIONS: See Bridge Layout(s).

SUPERSTRUCTURE NOTES:

MATERIALS AND STRENGTHS:

Class S(AE) Concrete	f'c =	4,000 psi
Reinforcing Steel (Gr. 60, AASHTO M 31 or M 322, Type A)	fy =	60,000 psi
Structural Steel (AASHTO M 270, Gr. 36)	Fy =	36,000 psi
Structural Steel (AASHTO M 270, Gr. 50)	Fy =	50,000 psi
Structural Steel (AASHTO M 270, Gr. 50W)	Fy =	50,000 psi
Structural Steel (AASHTO M 270, Gr. HPS70W)	Fy =	70,000 psi

See Plan Details for Grade(s) of Structural Steel required.

CONCRETE:

All concrete shall be Class S(AE) with a minimum 28 day compressive strength f'c = 4,000 psi. Concrete shall be poured in the dry and all exposed corners shall be chamfered 3/4" unless otherwise noted.

The superstructure details shown are for use when removable deck forming is used and are the basis for measurement of Class S(AE) Concrete. See Standard Drawing No. 55005 for allowable modifications and for tolerances when Permanent Steel Bridge Deck Forms are used.

Use of a longitudinal screed is not permitted on any span of a bridge deck with horizontal curvature.

The concrete deck (roadway surface) shall be given a tine finish in accordance with Subsection 802.19 for Class 5 Tined Bridge Roadway Surface Finish. Sidewalks shall receive a broomed finish as specified for final finishing in Subsection 802.19 for Class 6 Broomed Finish. Movement of the finishing machine across new concrete shall be on planks placed on the surface and shall be prohibited for 72 hours after finishing the pour. Sufficient concrete must be placed ahead of the strike-off to fully load the beam or girder. When permitted, the use of a longitudinal strike-off will require that a vertical camber adjustment be made in the strike-off to account for the future dead load deflection due to any railings, median barrier, and sidewalks.

REINFORCING STEEL:

All reinforcing steel shall be Grade 60 conforming to AASHTO M 31 or M 322, Type A, with mill test reports and shall be epoxy coated. The reinforcing steel is to be accurately located in the forms and firmly held in place by steel wire supports, sufficient in number and size to prevent displacement during the course of construction. The wire supports will not be paid for directly, but will be considered subsidiary to the item "Epoxy Coated Reinforcing Steel (Grade 60)".

STRUCTURAL STEEL (COMMON TO W-BEAMS AND PLATE GIRDERS):

Structural steel shall be AASHTO M 270 with grade and payment as specified in the plans. Grade 50W steel shall not be painted and all exposed surfaces shall be cleaned in accordance with Subsection 807.84(e). Grade 36 and Grade 50 steel shall be painted unless otherwise noted and all exposed surfaces shall be cleaned in accordance with Subsection 807.84. Structural steel completely embedded in concrete may be AASHTO M 270, Gr. 36, Gr. 50 or Gr. 50W unless otherwise noted.

Drawings show general features of design only. Shop drawings shall be made in accordance with the specifications, submitted and approval secured before fabrication is begun.

Requests for substitution of structural steel shapes shown with shapes of greater size must be submitted by the Contractor to the Engineer for approval. Steels of equal or greater strengths will be accepted only when shown on the approved shop drawings. Payment will be based on the basis of shapes and materials shown in the plans, and no additional compensation will be made for any adjustments due to substitutions.

All welding that is to be done during fabrication of structural steel, including temporary welds, shall be detailed on the shop drawings and submitted for approval. If additional welds are required, whether permanent or temporary, a formal request with detailed drawings shall be submitted to the Engineer for approval; however, additional welds used for attaching falsework support devices or screed rail supports to the structural steel that do not exceed the limitations of Subsection 802.13 will not require approval prior to construction. All welding shall conform to Subsection 807.26.

Unless otherwise noted, field connections shall be bolted with 3/4" ø high-strength bolts using 13/16" ø open holes. Holes for 3/4" ø high-strength bolts may be 15/16" ø if a washer is supplied for use under both the nut and head of the bolt. The use of oversized holes will not be allowed on main members unless otherwise noted. Bolts shall be placed with heads on the outside face of the exterior beam or girder webs and on the bottom of the beam or girder flanges.

All stud shear connectors shall be granular flux filled, solid fluxed, or equal and shall be automatically end welded in accordance with recommendations of the Manufacturer.

When painting is required, all structural steel except galvanized steel and steel completely encased in concrete shall be painted in accordance with Subsection 807.75. The color of paint shall be as specified in the plans.

STRUCTURAL STEEL (W-BEAMS):

All beams and field splice plates, and all diaphragms and connection plates attached to horizontally curved beams are considered main load carrying members and shall meet the Longitudinal Charpy V-Notch Test specified in Subsection 807.05. This work and material will not be paid for directly, but shall be considered subsidiary to the item "Structural Steel in Beam Spans (M 270, Gr. ___)".

All beams in continuous units and simple spans with field splices shall be blocked in their true position in the shop in groups as specified in Subsection 807.54(b)(2) with the webs horizontal. The camber, length of sections, distance between bearings, and openings of joints shall be measured and this information shall become part of the permanent records. The component parts shall be match marked in this assembly and these marks shall be shown on the erection diagram.

All beams in simple spans without field splices shall be blocked in their true position with webs horizontal. The camber, distance between bearings, and openings of joints shall be measured and this information shall become part of the permanent records.

Flange field splice plates shall be cut and fabricated so that the primary direction of rolling is parallel to the direction of the main tensile and/or compressive stresses.

All beam dimensions are based on a temperature of 60 degrees F. A tolerance of 1/4" +/- is allowed for camber.

Bent plate diaphragms for horizontally curved beams shall be cut and fabricated so that the primary direction of rolling is parallel to the direction of the main tensile and/or compressive stresses. Bent plate diaphragms for straight beams may be cut and fabricated in accordance with Subsection 807.35 or as required for horizontally curved beams.

Unless otherwise noted, diaphragms shall be installed as beams are erected. All bolts in diaphragms and field splices shall be installed and tightened in accordance with Subsection 807.71 prior to pouring the concrete deck.

STRUCTURAL STEEL (PLATE GIRDERS):

All references to cross-frames shall include "X" or "K" types.

All girder web and flange plates, all field splice plates, and all diaphragms, cross-frames and connection plates attached to horizontally curved girders are considered main load carrying members and shall meet the Longitudinal Charpy V-Notch Test specified in Subsection 807.05. This work and material will not be paid for directly, but shall be considered subsidiary to the item "Structural Steel in Plate Girder Spans (M 270, Gr. ___)".

All girders in continuous units and simple spans with field splices shall be assembled in the shop as specified in Subsection 807.54(b)(2) and blocked in their true position with webs horizontal. The camber, length of sections, distance between bearings, and openings of joints shall be measured and this information shall become part of the permanent records. The component parts shall be match marked in this assembly and these marks shall be shown on the erection diagram.

All girders in simple spans without field splices shall be blocked in their true position with webs horizontal. The camber, distance between bearings, and openings of joints shall be measured and this information shall become part of the permanent records.

Web and flange plates for main members and flange splice plates for main members shall be cut and fabricated so that the primary direction of rolling is parallel to the direction of the main tensile and/or compressive stresses.

Girder webs may be made by shop splicing with minimum lengths of 25 feet for sections. Flange plates longer than 50 feet may be made by shop splicing with minimum lengths of 25 feet for sections. No additional payment will be made for shop welded splices.

All girder dimensions are based on a temperature of 60 degrees F. A tolerance of 1/4" +/- is allowed for camber.

Groove welds in web and flange plates shall be Quality Control (Q.C.) tested by nondestructive testing, as required in Subsection 807.23(b). Fillet welds at flange to web plate connections shall be Q.C. tested by the magnetic particle method. All Q.C. testing shall be considered subsidiary to the item "Structural Steel in Plate Girder Spans (M 270, Gr. ___)".

Bent plate diaphragms for horizontally curved girders shall be cut and fabricated so that the primary direction of rolling is parallel to the direction of the main tensile and/or compressive stresses. Bent plate diaphragms for straight girders may be cut and fabricated in accordance with Subsection 807.35 or as required for horizontally curved girders.

Unless otherwise noted, cross-frames and diaphragms shall be installed as girders are erected. All bolts in cross-frames, diaphragms, and field splices shall be installed and tightened in accordance with Subsection 807.71 prior to pouring the concrete deck.

SUBSTRUCTURE NOTES:

CONCRETE:

Unless otherwise noted, concrete in caps, columns and footings (except seal footings) shall be Class "S" with a minimum 28 day compressive strength f'c = 3,500 psi and shall be poured in the dry. Seal Concrete for footings shall have a minimum 28 day compressive strength f'c = 2,100 psi.

Concrete in drilled shafts shall be Class "S" as modified by Job SP "Drilled Shaft Foundations".

All exposed corners shall be chamfered 3/4" unless otherwise noted.

REINFORCING STEEL:

All reinforcing steel shall be Grade 60 (yield strength = 60,000 psi) conforming to AASHTO M 31 or M 322, Type A, with mill test reports.

Top reinforcing bars in cap shall be properly placed to avoid interference with anchor bolts or sheet metal sleeves.

STRUCTURAL STEEL:

Structural steel in end bents shall be AASHTO M 270 with grade and payment as specified in the plans.

FOR ADDITIONAL INFORMATION AND NOTES, SEE LAYOUT(S) AND PLAN DETAILS.

STANDARD GENERAL NOTES
FOR STEEL BRIDGE STRUCTURES

ARKANSAS STATE HIGHWAY COMMISSION
LITTLE ROCK, ARK.

DRAWN BY:	A.M.S.	DATE:	9-2-2015	FILENAME:	b55006.dgn
CHECKED BY:	B.E.F.	DATE:	9-2-2015	SCALE:	NO SCALE
DESIGNED BY:	STD.	DATE:			

DRAWING NO. 55006

PRINT DATE: 11/7/2019

DATE REVISED	DATE FILMED	DATE REVISED	DATE FILMED	FED. ROAD DIST. NO.	STATE	FED. AID PROJ. NO.	SHEET NO.	TOTAL SHEETS
				6	ARK.			
				JOB NO.				
				1	STEEL BRIDGE STRUCTURES 55007			

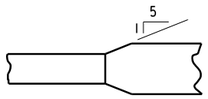

Plan-Unequal Width (Flg.)

FLANGE SPLICE

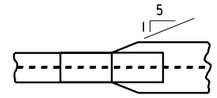

FLANGE SPLICE AT UNEQUAL BOTTOM FLANGE WIDTHS

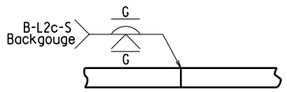

Equal Thickness

WEB & FLANGE SPLICE

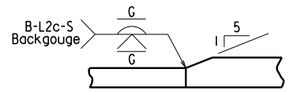

Unequal Thickness

FLANGE SPLICE

(Use when Base Metal Thickness is Equal to or Less than 2")

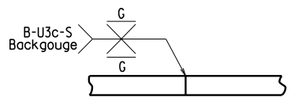

Equal Thickness

WEB & FLANGE SPLICE

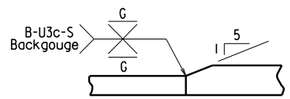

Unequal Thickness

FLANGE SPLICE

(Use when Base Metal Thickness is Greater than 2")

DETAILS OF WELDED SPLICES FOR PLATE GIRDERS

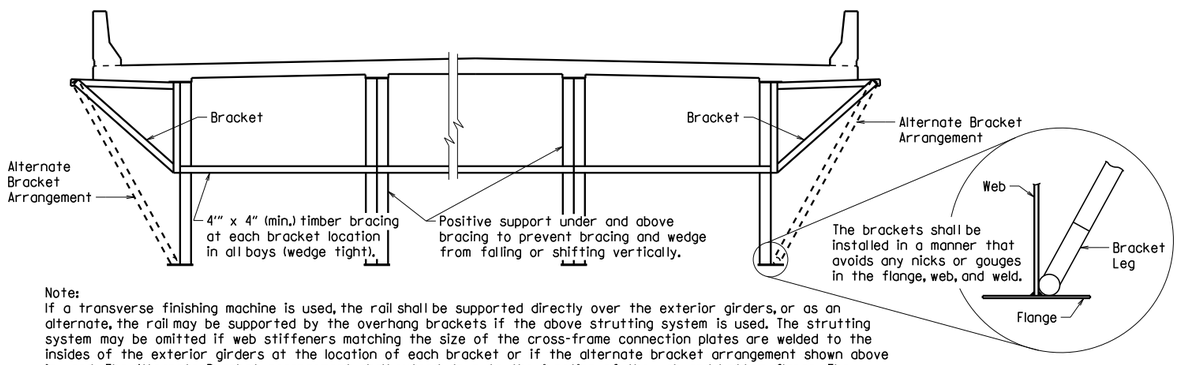

Note:
If a transverse finishing machine is used, the rail shall be supported directly over the exterior girders, or as an alternate, the rail may be supported by the overhang brackets if the above strutting system is used. The strutting system may be omitted if web stiffeners matching the size of the cross-frame connection plates are welded to the insides of the exterior girders at the location of each bracket or if the alternate bracket arrangement shown above is used. The Alternate Bracket arrangement shall extend down to the junction of the web and bottom flange. The stiffener shall conform to the details for cross frame connection plates shown on the plans. No direct payment will be made for brackets, timber bracing, supports, or welded stiffeners. Payment shall be subsidiary to "Structural Steel in Plate Girder Spans (____)".

SCREED RAIL SUPPORT FOR PLATE GIRDERS

(USE WHEN WEB DEPTHS ARE 48" OR GREATER)

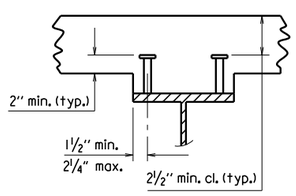

2 STUDS PER ROW

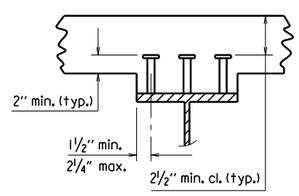

3 STUDS PER ROW

Stud Shear Connectors shall be automatically end welded to the beam or girder flange in accordance with the recommendations of the Manufacturer. See plan details for number and size.

SHEAR CONNECTOR DETAIL

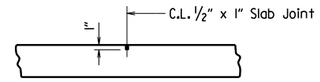

Use Type 3 or 4 Joint Sealer. See Subsections 501.02(h) and 501.05(j). Backer Rod filler will not be required. Joint Sealer shall be measured and paid for as Class S(AE) Concrete-Bridge. Slab Joints shall extend to the outside edge of the deck slab and shall align with open joints at the front face of the parapet. Slab joints shall be installed before the parapet railing is poured. If slab joints are to be sawed, they shall be sawed as soon as the concrete has sufficiently set to allow sawing of the joint without damage to the slab. Slab joints shall be placed at all pouring sequence construction joints and required slab joint locations. The joint sealer shall extend across the deck from gutterline to gutterline.

ADDITIONAL NOTES IF SIDEWALKS OR RAISED MEDIANS ARE REQUIRED:
Slab Joints shall be installed before the sidewalk or raised median is poured. After installation of the joint in the sidewalk or raised median and prior to pouring the parapet rail, the joint sealer shall be placed extending across the deck slab from gutterline to gutterline and acrosss the top of the sidwalk or raised median to the edge of the slab. No joint sealer shall be placed on the deck slab under the sidewalk or raised median.

TRANSVERSE SLAB JOINT DETAIL

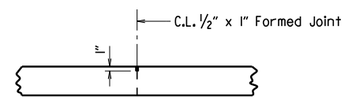

Use ½" x 1" Type 3 or 4 Joint Sealer. See Subsections 501.02(h) and 501.05(j). Backer Rod filler will not be required. Joint sealer shall be measured and paid for as Class S(AE) Concrete-Bridge. This joint shall be formed. Seal color shall be gray or other color similar to concrete.

LONGITUDINAL CONSTRUCTION JOINT

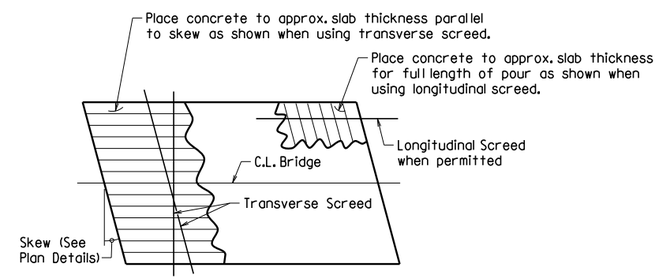

Note: At the Contractor's option, the transverse screed may be placed parallel to the skew or perpendicular to C.L. Bridge.

CONCRETE PLACEMENT PROCEDURE FOR BRIDGES WITH SKEW

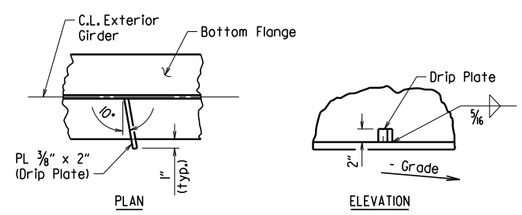

Drip Plate to be welded to the outer side of the bottom flange of the exterior girders.

Locate drip plate 5'-0" from C.L. Bearing on high side of each Bent, unless otherwise noted in the plans.

BOTTOM FLANGE DRIP PLATE

(USE WHEN WEB DEPTHS ARE 54" OR GREATER AND UNIT OR SPAN IS NOT IN LEVEL GRADE)

t_s = slab thickness. See "Typical Roadway Section" in the plans.

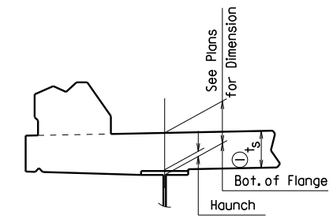

EXTERIOR BEAM OR GIRDER

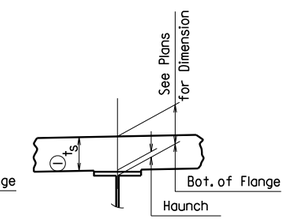

INTERIOR BEAM OR GIRDER

(1) Tolerance when removable deck forming is used is + ½", - ¼". Haunch forming is required and shall be adjusted to maintain slab thickness tolerance.

NOTES:
Haunch dimension may vary within the following limits to maintain the grade and slab thickness tolerance: Minimum occurs when top flange contacts bottom reinforcing steel; Maximum = top flange thickness plus 1¾" unless otherwise noted in the plans. No increase in concrete and structural steel quantities will be made to maintain tolerances.

Tolerances shown are applicable only when removable deck forming is used. See Std. Dwg. No. 55005 for tolerances when permanent steel deck forms are used. Payment for concrete shall be based on removable deck forming.

ADJUSTMENT FOR SLAB THICKNESS TOLERANCE

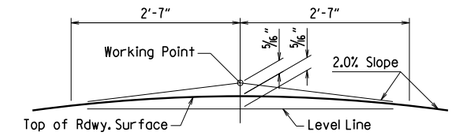

NOTE: Working Point matches Theoretical Roadway Grade.

ROUNDING DETAIL

BRIDGES IN NORMAL CROWN

WELD TABLE

Material Thickness of Thicker Part Joined (Inches)	Minimum Size of Fillet Weld (Inches)	Single Pass Weld Must Be Used
To ¾" Inclusive	¼"	
Over ¾"	5/16"	

NOTE: When a fillet weld size, as shown on the plans, is larger than the minimum, the first pass shall be that specified for minimum size of fillet weld.

SECTION AND SUBSECTION REFER TO THE ARKANSAS STATE HIGHWAY AND TRANSPORTATION DEPARTMENT STANDARD SPECIFICATIONS FOR HIGHWAY CONSTRUCTION (2014 EDITION).

THESE DETAILS ARE APPLICABLE UNLESS OTHERWISE SHOWN IN THE PLAN DETAILS, SPECIAL PROVISIONS, OR SUPPLEMENTAL SPECIFICATIONS.

STANDARD DETAILS FOR STEEL BRIDGE STRUCTURES

ARKANSAS STATE HIGHWAY COMMISSION

LITTLE ROCK, ARK.

DRAWN BY:	JYP	DATE:	2/11/2016	FILENAME:	b55007.dgn
CHECKED BY:	AMS	DATE:	2/11/2016	SCALE:	No Scale
DESIGNED BY:	STD.	DATE:	—		

DRAWING NO. 55007

DATE REVISED	DATE FILMED	DATE REVISED	DATE FILMED	FED. ROAD DIST. NO.	STATE	FED. AID PROJ. NO.	SHEET NO.	TOTAL SHEETS
				6	ARK.			
				JOB NO.				
				1	POURED SILICONE JOINT			55008

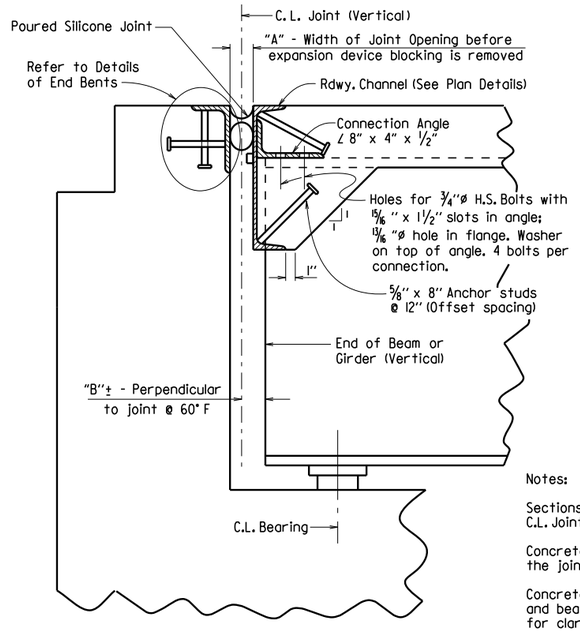

SECTION THRU JOINT AT END BENT

Notes:

Sections are taken perpendicular to C.L. Joint.

Concrete shall be hand packed under the joint armor.

Concrete diaphragms, steel diaphragms and bearing stiffeners are not shown for clarity. See plans for details.

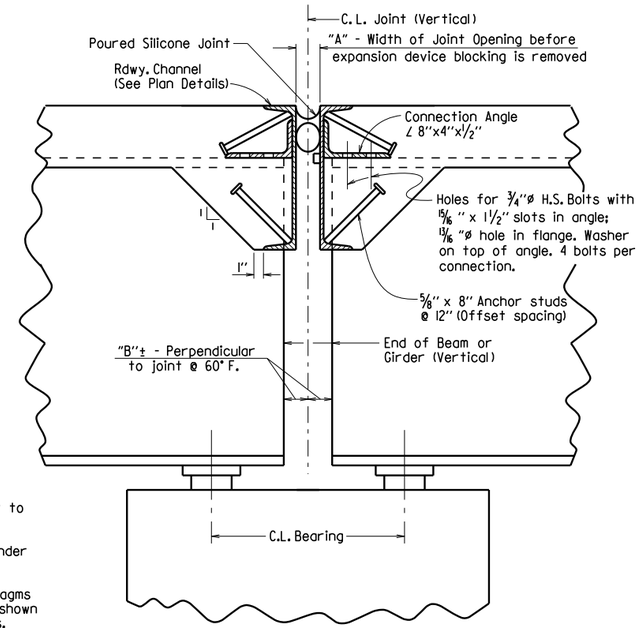

SECTION THRU JOINT AT INTERMEDIATE BENT

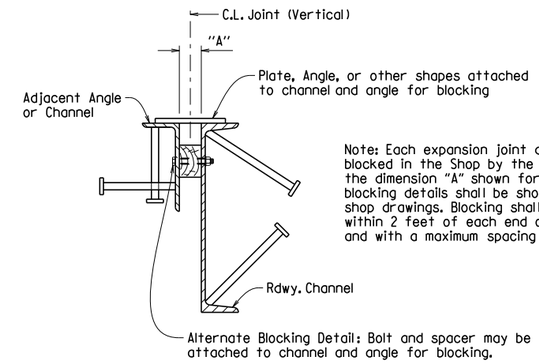

Note: Each expansion joint device shall be blocked in the Shop by the Fabricator to the dimension "A" shown for 60° F and the blocking details shall be shown on the shop drawings. Blocking shall be placed within 2 feet of each end of the device and with a maximum spacing of 8 feet.

DETAILS FOR BLOCKING EXPANSION JOINT DEVICE

EXPANSION DEVICE INSTALLATION AT END BENTS:

The Contractor may elect to install the expansion device using one of the following two alternatives:

1) The concrete span pour adjacent to joint shall be placed before the end bent backwall is placed. After the end bent backwall forms are in place and the beams or girders erected, the blocked expansion device shall be installed and adjusted for grade. All connection bolts shall be fully tightened prior to placing the deck concrete adjacent to the bent. Immediately prior to pouring the backwall concrete, the blocking shall be removed, and the opening adjusted for temperature and grade.

2) The backwall shall be poured to the optional construction joint after beams or girders are erected. The blocked expansion device shall be installed and adjusted for grade. All connection bolts shall be fully tightened prior to placing the deck concrete adjacent to the bent. Immediately prior to pouring the remainder of the backwall concrete, the blocking shall be removed and the opening adjusted for temperature and grade.

EXPANSION DEVICE INSTALLATION AT INTERMEDIATE BENTS:

After all beams or girders on each side of the joint are erected the blocked expansion device shall be installed and adjusted for grade. Deck concrete shall be placed for the entire unit or span on one side of the joint before deck concrete on the other side is placed. Connection bolts for the first side to have deck concrete placed shall be completely bolted. Bolts on the other side shall be loosely installed so that thermal and rotational movements will not be restricted during concrete placement on the first side.

Connection bolts on the second side shall remain loose until the concrete pour adjacent to the joint is to be placed. Immediately prior to pouring the span concrete on the second side, the blocking shall be removed, the joint adjusted for temperature and grade, and the connection bolts tightened.

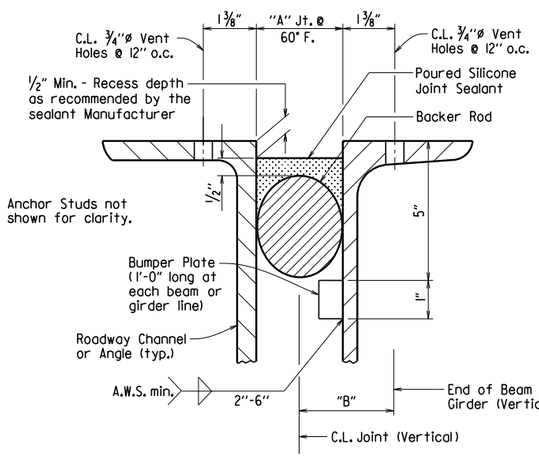

DETAIL OF POURED SILICONE JOINT

Silicone joint material and installation shall conform to Section 809. The temperature limitations recommended by the sealant Manufacturer shall be observed. The sealant shall be installed only when the average 24 hour air temperature is between 40° and 80° F.

Use an appropriately sized backer rod at the depth shown in the Manufacturer's literature based on the joint width at the time of sealing. Unless otherwise noted, do not install more backer rod than can be sealed in the same day.

The Contractor shall verify separation of the backer rod from the joint material after the joint material has set.

When bridge deck is constructed in stages, backer rods shall be extended beyond length of poured joint in initial construction stage so that the two pieces can be properly spliced together prior to installing sealant in subsequent stages. Manufacturer's recommendations shall be followed to prevent sealant from "running out of joint" during stage construction.

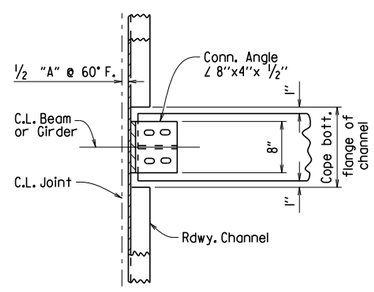

CHANNEL CONNECTION DETAIL

BENTS WITHOUT SKEW

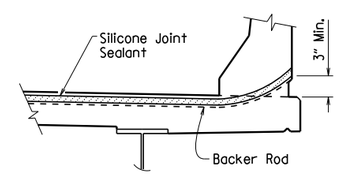

JOINT SEAL PLACEMENT AT RAIL

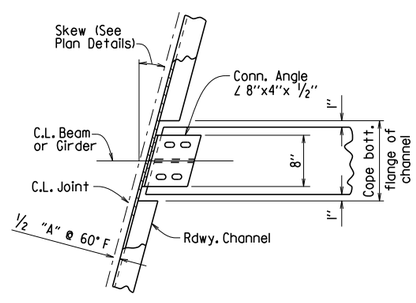

CHANNEL CONNECTION DETAIL

BENTS WITH SKEW

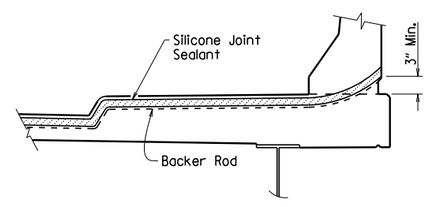

JOINT SEAL PLACEMENT AT SIDEWALK

SECTION AND SUBSECTION REFER TO THE ARKANSAS STATE HIGHWAY AND TRANSPORTATION DEPARTMENT STANDARD SPECIFICATIONS FOR HIGHWAY CONSTRUCTION (2014 EDITION).

THESE DETAILS ARE APPLICABLE UNLESS OTHERWISE SHOWN IN THE PLAN DETAILS, SPECIAL PROVISIONS, OR SUPPLEMENTAL SPECIFICATIONS. SEE "TABLE OF SILICONE JOINT DATA" IN PLAN DETAILS FOR VARIABLES "A" AND "B", AND BUMPER PLATE SIZE.

STANDARD DETAILS FOR POURED SILICONE JOINTS

ARKANSAS STATE HIGHWAY COMMISSION

LITTLE ROCK, ARK.

DRAWN BY:	A.C.P.	DATE:	2/11/2016	FILENAME:	b55008.dgn
CHECKED BY:	A.M.S.	DATE:	2/11/2016	SCALE:	No Scale
DESIGNED BY:	STD.	DATE:	—		

DRAWING NO. 55008

DATE REVISED	DATE FILMED	DATE REVISED	DATE FILMED	FED. ROAD DIST. NO.	STATE	FED. AID PROJ. NO.	SHEET NO.	TOTAL SHEETS
3/24/16				6	ARK.			
				JOB NO.				
						STEEL H-PILES		55020

1

GENERAL NOTES FOR STEEL H-PILES:

Steel H-Piles shall conform to AASHTO M 270, Grade 36 or greater.

See Bridge Layout and Bent Details for pile size, estimated length, spacing, pile anchorage (if required) and for driving information.

Steel H-Piles that extend above the ground and are not protected by pile encasement shall be painted in accordance with Subsection 805.02.

Brackets, lugs, cap plates, pile tips, driving points, pile painting, splicing and welding shall not be paid for directly, but shall be considered subsidiary to the item "Steel Piling".

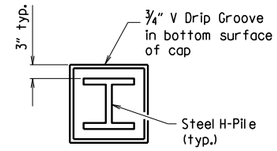

VIEW X-X

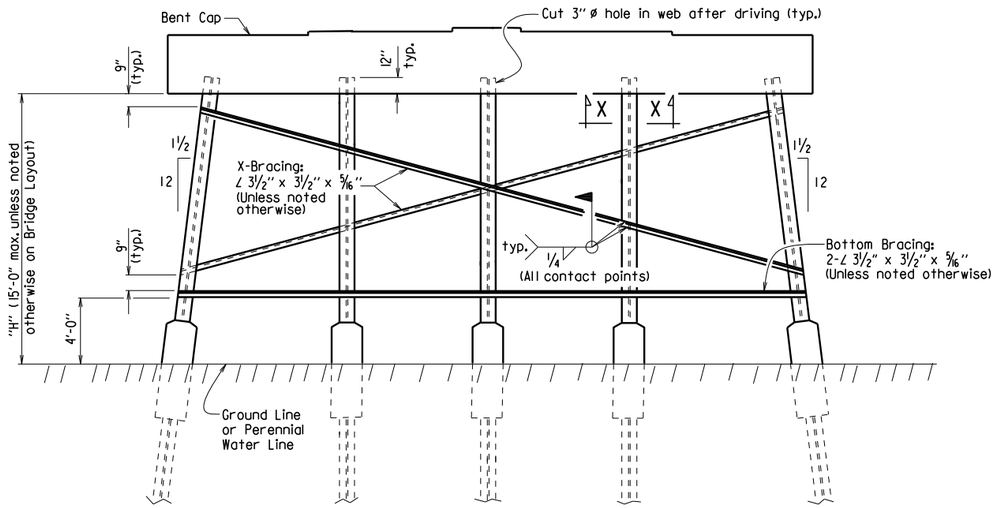

Notes:
All bracing shall be cut and welded in the field. Each brace shall be furnished in one piece. Payment shall be made under Item 807.

Unless noted otherwise, omit X-Bracing when "H" is less than 8 feet.

Omit X-Bracing and Bottom Bracing when "H" is 5 feet or less.

When required on the Bridge Layout sheet, pile encasements shall be constructed. See Notes and Details for H-Pile Encasements.

Omit all bracing (and V-groove in cap) when pile encasement is extended to bottom of bent cap.

TYPICAL DETAILS OF H-PILE TRESTLE INTERMEDIATE BENT

(Shown with Partial Height Encasement)

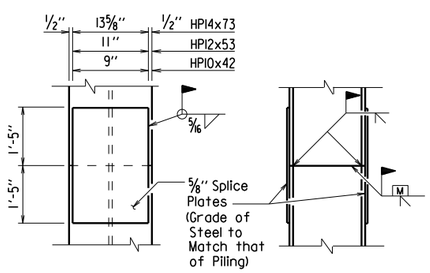

The Contractor may for his own convenience and at his own expense provide as many as three splices per pile. Minimum spacing between splices shall be 5 feet.

TYPICAL SPLICE DETAILS

⚠ H-pile splicers manufactured by Associated Pile and Fitting Corporation, LB Foster Piling, Skyline Steel or equivalent may be used in lieu of the "Typical Splice Details" shown. H-pile splicers shall match the same grade of steel specified for the piling and shall be welded to the pile with a 5/16" fillet weld around the entire perimeter of the splice. Flanges shall be welded with a complete penetration groove weld complying with AASHTO/AWS Joint Designation B-U4a or B-U4b. All welding shall conform to Subsection 807.26 of the AHTD Standard Specifcations for Highway Construction (2014 Edition).

Notes:
Steel pile tip reinforcing not required when approved H-Pile driving points are used.

Steel pile tip reinforcing shall not be paid for directly, but shall be considered subsidiary to the item "Steel Piling".

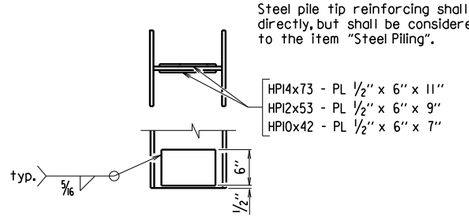

REINFORCING DETAIL FOR STEEL H-PILE TIP

GENERAL NOTES FOR H-PILE ENCASEMENTS:

⚠ See Bridge Layout for additional notes, any pile encasement restrictions and required location of pile encasements.

All concrete shall be Class S with a minimum 28-day compressive strength, f'c = 3,500 psi. If concrete cannot be placed in the dry, Seal Concrete may be used from top to bottom of encasement.

Reinforcing steel shall be Grade 60 conforming to AASHTO M 31 or M 322, Type A.

Welded Wire Fabric shall conform to AASHTO M 55 or M 221. Galvanized Corrugated Steel Pipe shall conform to AASHTO M 36 and M 218.

Concrete, welded wire fabric or reinforcing steel and galvanized pipe shall not be paid for directly, but shall be considered subsidiary to the item "Pile Encasement".

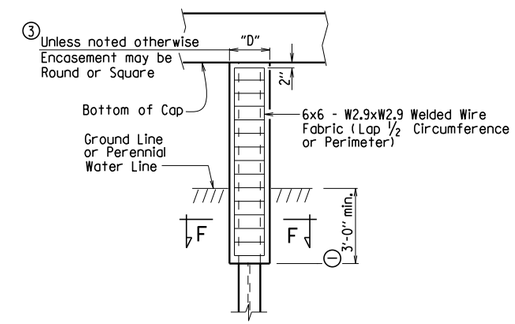

PILE ENCASEMENT DETAIL FOR STEEL H-PILES

4 (Shown with Encasement to Bottom of Cap)

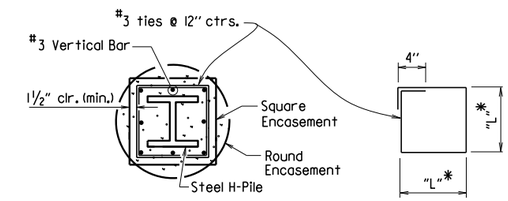

SECTION F-F

*Measured out-to-out of bar.

TABLE OF VARIABLES FOR PILE ENCASEMENT

Pile Size	"D" Square Encsmt.	"D" Round Encsmt.	"L"*
HP10x42	1'-7"	2'-0"	1'-4"
HP12x53	1'-8"	2'-2"	1'-5"
HP14x73	1'-11"	2'-6"	1'-8"

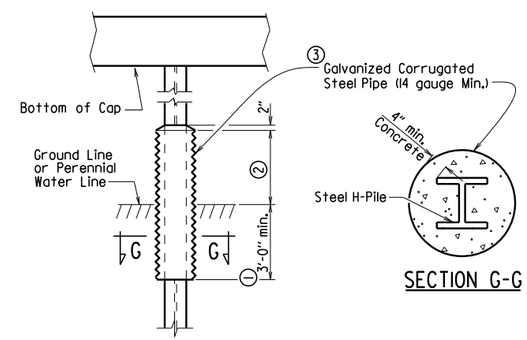

SECTION G-G

1 Unless otherwise noted on Bridge Layout.

2 3'-0" minimum or as shown on Bridge Layout.

3 Encasement dimensions shall be sized to maintain a minimum concrete cover of 4" from the H-Pile. Reinforcement shall be sized to provide a minimum concrete cover of 1 1/2" and a minimum clearance of 1 1/4" from the pile.

4 Alternate pile encasement, when not extended to bottom of cap, shall have 2" concrete taper for water runoff as shown in the Partial Height Encasement detail.

ALTERNATE PILE ENCASEMENT DETAIL FOR STEEL H-PILES

(Shown with Partial Height Encasement)

⚠ Added alternate method of splicing H-piles and revised pile encasement note.
3/24/2016 AMS

This document was originally issued and sealed by Charles R. Ellis, PE No. 9235, on March 24, 2016. This copy is not a signed and sealed document.

STATE OF ARKANSAS
REGISTERED PROFESSIONAL ENGINEER
No. 9235
CHARLES R. ELLIS

BRIDGE ENGINEER

STANDARD DETAILS FOR STEEL H-PILES AND PILE ENCASEMENTS

ARKANSAS STATE HIGHWAY COMMISSION

LITTLE ROCK, ARK.

DRAWN BY:	A.M.S.	DATE:	2/27/2014	FILENAME:	b55020.dgn
CHECKED BY:	B.E.F.	DATE:	2/27/2014	SCALE:	NO SCALE
DESIGNED BY:	STD.	DATE:	—		

DRAWING NO. 55020

DATE REVISED	DATE FILMED	DATE REVISED	DATE FILMED	FED. ROAD DIST. NO.	STATE	FED. AID PROJ. NO.	SHEET NO.	TOTAL SHEETS
				6	ARK.			
				JOB NO.				

(1) Type F Approach Gutters - 55030F

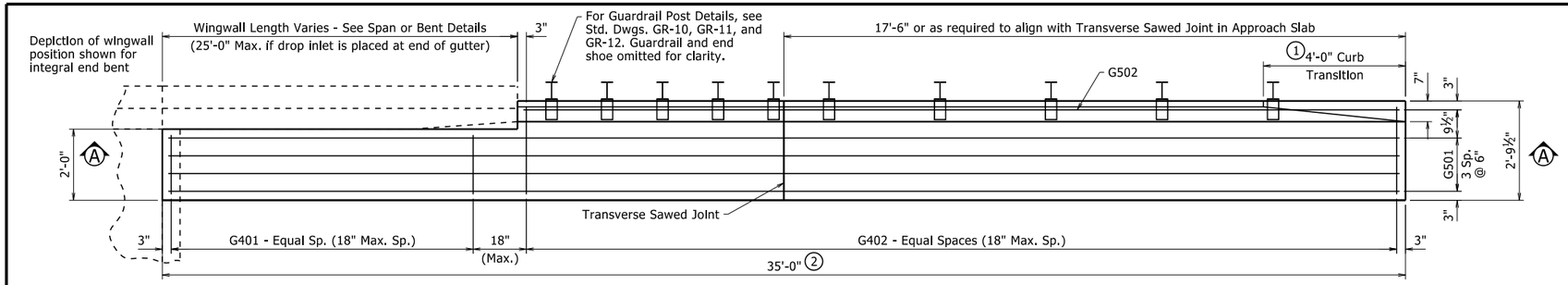

HALF PLAN OF APPROACH GUTTERS FOR SQUARE END BENT

½" = 1'-0"

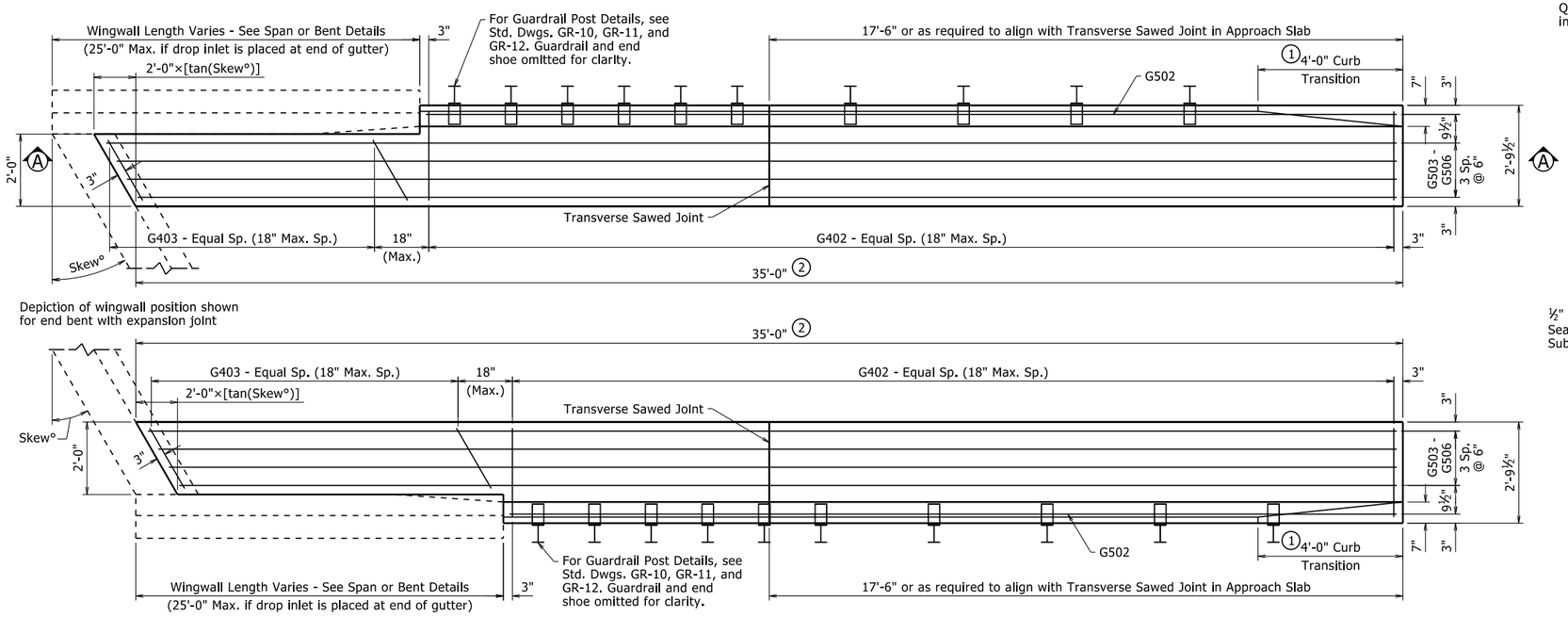

PLAN OF SKEWED APPROACH GUTTERS FOR SKEWED END BENT

½" = 1'-0"

QUANTITIES FOR ONE APPROACH GUTTER

(For Information Only)

Reinforcing Steel (Lbs.)	Concrete (Cu. Yds.)
210	4.20

Quantities are based on one gutter for a square, integral end bent and a wingwall length of 10'-0"

BAR LIST FOR ONE APPROACH GUTTER

	Mark	No. Req'd.	Length
Square End Bent	G401	(4)	1'-8"
	G402	(4)	2'-5½"
	G501	4	34'-8"
	G502	1	(4)
Skewed End Bent	G402	(4)	2'-5½"
	G403	(4)	(4)
	G502	1	(4)
	G503 - G506	1 ea.	(4)

(4) Varies with Skew and/or Wingwall Length

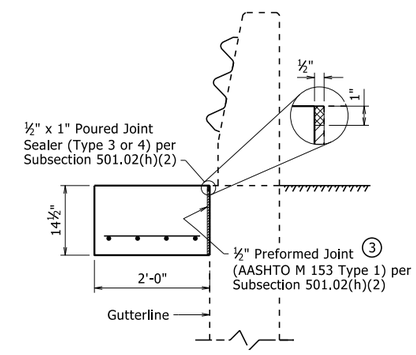

SECTION B-B

¾" = 1'-0"

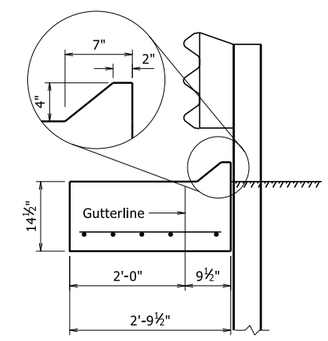

SECTION C-C

¾" = 1'-0"

(1) Construct gutter curb with height transition as shown if drop inlet is not placed at end of gutter.

Construct gutter curb full height (no height transition) if drop inlet is placed at end of gutter. Curb height transition placed on drop inlet.

(2) Adjust gutter length as necessary to avoid outlet pipe interference with guardrail post if drop inlet is placed at end of gutter.

(3) Eliminate Type 1 Preformed Joint when bridge details show reinforcing dowels across these joints. Poured joint sealer is required, however, backer rod shall be eliminated.

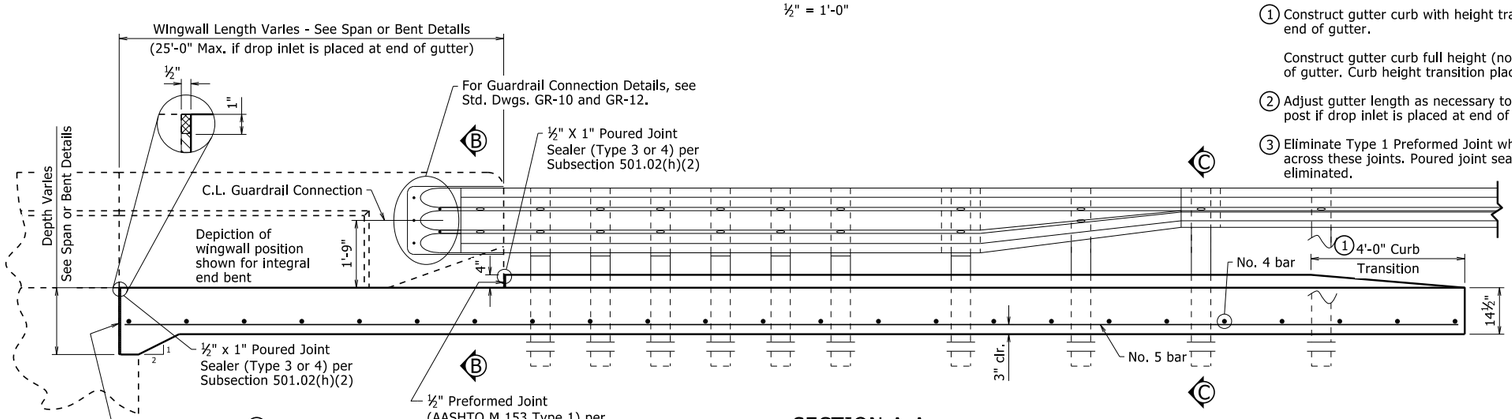

SECTION A-A

½" = 1'-0"

(Approach Gutter for Square End Bent Shown)

GENERAL NOTES

All concrete shall be Class S(AE) with a minimum 28 day compressive strength f'c = 4,000 psi and shall be poured in the dry.

All reinforcing steel shall be Grade 60 (yield strength = 60,000 psi) conforming to AASHTO M 31 or M 322, Type A, with mill test reports.

Approach Gutters will be measured and paid for in accordance with Section 504.

All longitudinal lines within the limits of horizontal curves shall be on curves concentric to C.L. Bridge. Adjustment to longitudinal bar lengths may be required. Transverse reinforcing shall be placed on radial lines to C.L. Bridge.

Scales shown are for 22"x34" drawings. When using 11"x17" drawings, reduce scale by one half.

STANDARD DETAILS FOR
TYPE F APPROACH GUTTERS

ARKANSAS STATE HIGHWAY COMMISSION

LITTLE ROCK, ARK.

DRAWN BY:	NAC	DATE:	4-8-2021	FILENAME:	b55030f.dgn
CHECKED BY:	LJB	DATE:	4-8-2021	SCALE:	AS NOTED
DESIGNED BY:	STD	DATE:	-		

DRAWING NO. 55030F

PRINT DATE: 4/9/2021

DATE REVISED	DATE FILMED	DATE REVISED	DATE FILMED	FED. ROAD DIST. NO.	STATE	FED. AID PROJ. NO.	SHEET NO.	TOTAL SHEETS
				6	ARK.			
				JOB NO.				

1 TYPE CI APPROACH SLAB 55040CI

Notes:
The surface finish for Approach Slabs shall match that used on the bridge deck.

All longitudinal lines within the limits of horizontal curves shall be on curves concentric to C.L. Bridge. Adjustment to longitudinal bar lengths may be required. Transverse reinforcing shall be placed on radial lines to C.L. Bridge.

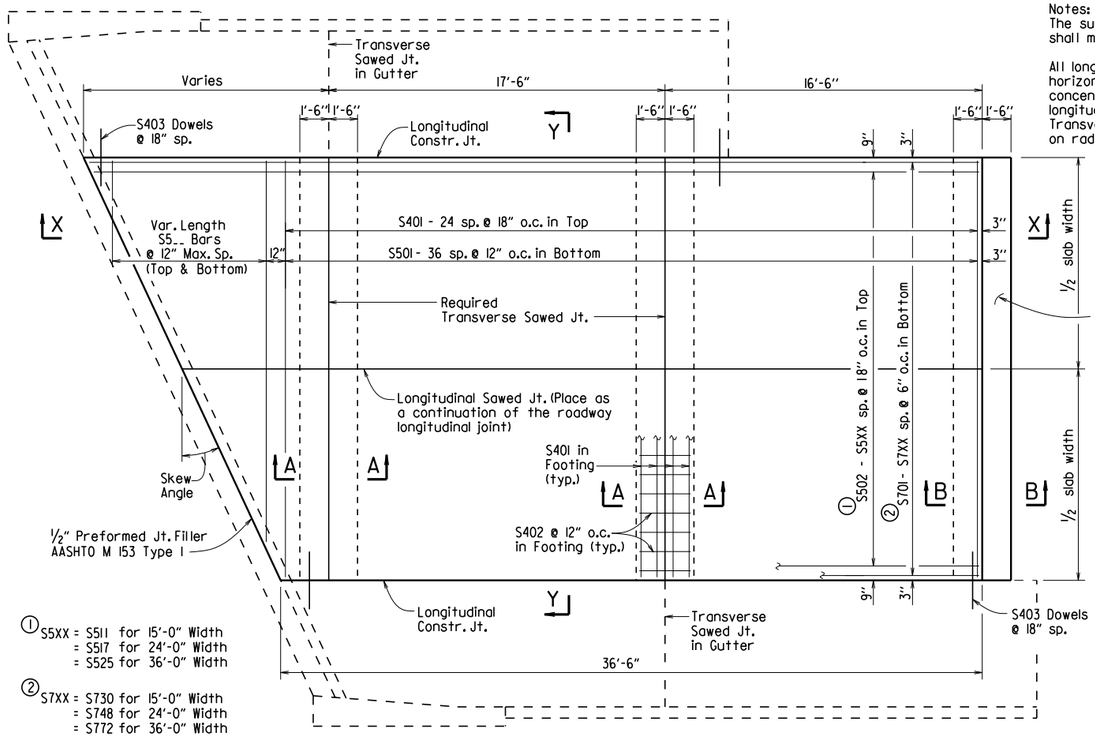

① S5XX = S511 for 15'-0" Width
= S517 for 24'-0" Width
= S525 for 36'-0" Width

② S7XX = S730 for 15'-0" Width
= S748 for 24'-0" Width
= S772 for 36'-0" Width

PLAN - SKEWED APPROACH SLAB WITH APPROACH GUTTERS

1/4" = 1'-0"

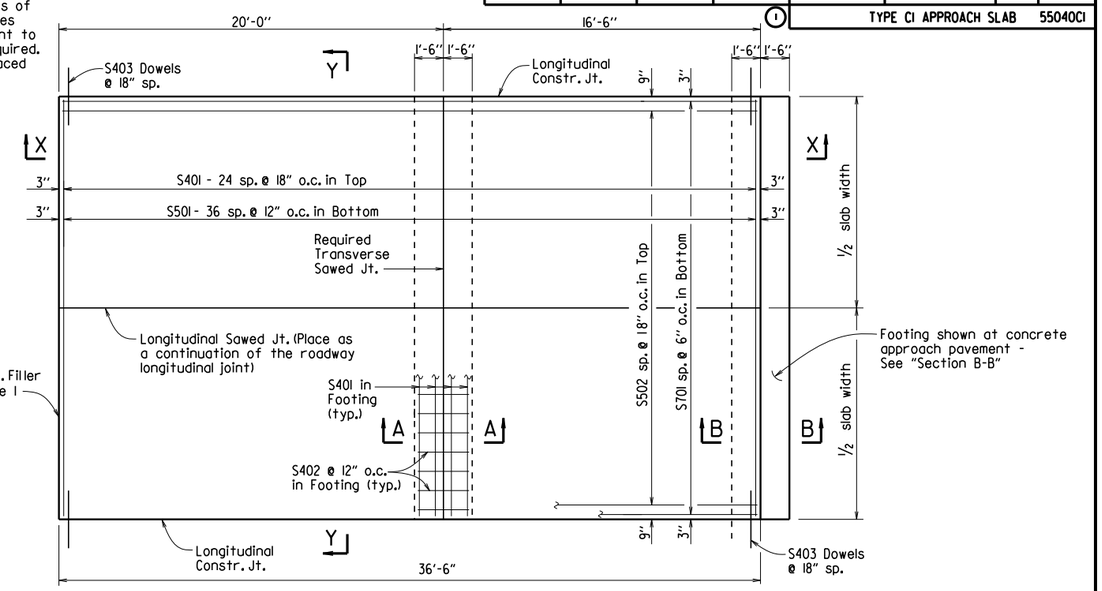

PLAN - SQUARE APPROACH SLAB

1/4" = 1'-0"

BAR LIST

(Square & Skewed Approach Slabs)

	Mark	Square No. Req'd.	Square Length	Skewed No. Req'd.	Skewed Length
15'-0" Slab Width	S401	33	14'-8"	37	14'-8"
	S402	30	2'-8"	45	2'-8"
	S403	50	3'-0"	*	3'-0"
	S501	37	14'-8"	37	14'-8"
	S502	10	36'-2"	—	—
	S502 - S511	—	—	1 Ea.	36.1' + 0.75' (tan skew angle) to 36.1' + 14.25' (tan skew angle)
	S5_	—	—	2 Ea.	14.7' - 0.75'/(tan skew angle) to 2'-0" Min.
	S701	30	36'-2"	—	—
	S701 - S730	—	—	1 Ea.	36.1' + 0.25' (tan skew angle) to 36.1' + 14.75' (tan skew angle)
24'-0" Slab Width	S401	33	23'-8"	37	23'-8"
	S402	48	2'-8"	72	2'-8"
	S403	50	3'-0"	*	3'-0"
	S501	37	23'-8"	37	23'-8"
	S502	16	36'-2"	—	—
	S502 - S517	—	—	1 Ea.	36.1' + 0.75' (tan skew angle) to 36.1' + 23.25' (tan skew angle)
	S5_	—	—	2 Ea.	23.7' - 0.75'/(tan skew angle) to 2'-0" Min.
	S701	48	36'-2"	—	—
	S701 - S748	—	—	1 Ea.	36.1' + 0.25' (tan skew angle) to 36.1' + 23.75' (tan skew angle)
36'-0" Slab Width	S401	33	35'-8"	37	35'-8"
	S402	72	2'-8"	108	2'-8"
	S403	50	3'-0"	*	3'-0"
	S501	37	35'-8"	37	35'-8"
	S502	24	36'-2"	—	—
	S502 - S525	—	—	1 Ea.	36.1' + 0.75' (tan skew angle) to 36.1' + 35.25' (tan skew angle)
	S5_	—	—	2 Ea.	35.7' - 0.75'/(tan skew angle) to 2'-0" Min.
	S701	72	36'-2"	—	—
	S701 - S772	—	—	1 Ea.	36.1' + 0.25' (tan skew angle) to 36.1' + 35.75' (tan skew angle)

* Varies with skew angle

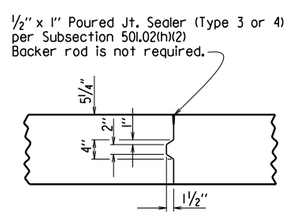

DETAILS OF LONGITUDINAL CONSTRUCTION JOINT

3/4" = 1'-0"

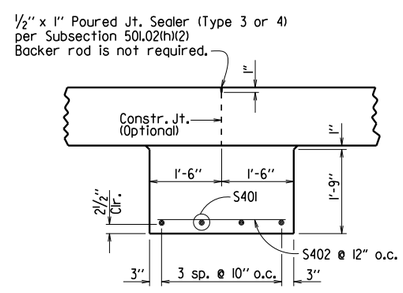

SECTION A-A

N.T.S.

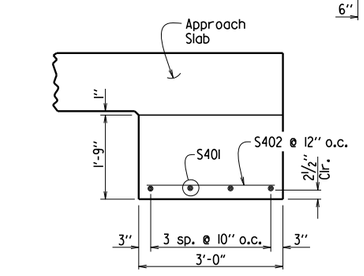

SECTION B-B

AT ASPHALT APPROACH PAVEMENT

N.T.S.

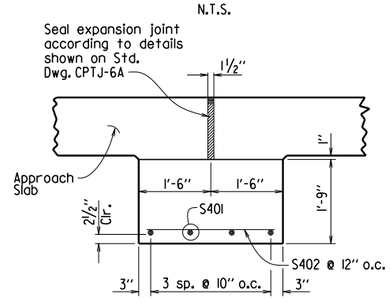

SECTION B-B

AT CONCRETE APPROACH PAVEMENT

N.T.S.

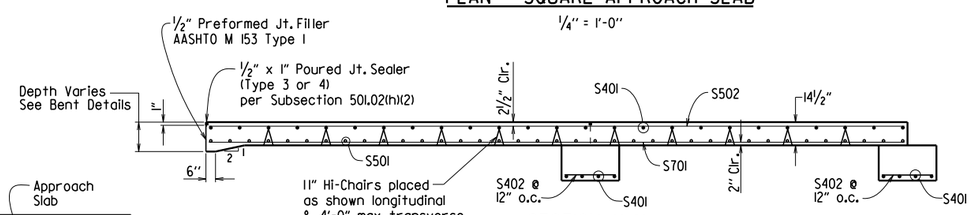

SECTION X-X

SQUARE APPROACH SLAB SHOWN

1/4" = 1'-0"

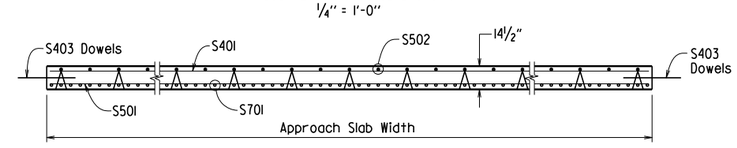

SECTION Y-Y

N.T.S.

TABLE OF QUANTITIES FOR ONE SQUARE APPROACH SLAB

(FOR INFORMATION ONLY)

Slab Width	Reinforcing Steel (Lbs.)	Concrete (Cu. Yds.)
15'-0"	3640	30.75
24'-0"	5775	49.15
36'-0"	8620	73.75

GENERAL NOTES

This drawing shall be used for Approach Slabs in Seismic Performance Zone 1 and for the maximum skew angles shown below:

15'-0" Slab Width: Maximum Skew Angle = 50°
24'-0" Slab Width: Maximum Skew Angle = 40°
36'-0" Slab Width: Maximum Skew Angle = 30°

All concrete shall be Class S (AE) with a minimum 28 day compressive strength f'c = 4,000 psi and shall be poured in the dry.

All reinforcing steel shall be Grade 60 (yield strength = 60,000 psi) conforming to AASHTO M 31 or M 322, Type A, with mill test reports.

Approach Slabs will be measured and paid for in accordance with Section 504.

STANDARD DETAILS FOR TYPE CI APPROACH SLAB

ARKANSAS STATE HIGHWAY COMMISSION

LITTLE ROCK, ARK.

DRAWN BY:	A.M.S.	DATE:	2/27/2014	FILENAME:	b55040ci.dgn
CHECKED BY:	K.W.Y.	DATE:	2/27/2014	SCALE:	AS SHOWN
DESIGNED BY:	STD.	DATE:			

DRAWING NO. 55040CI

DATE REVISED	DATE FILMED	DATE REVISED	DATE FILMED	FED. ROAD DIST. NO.	STATE	FED. AID PROJ. NO.	SHEET NO.	TOTAL SHEETS
				6	ARK.			
				JOB NO.				

1 TYPE SSTR36 - 55070

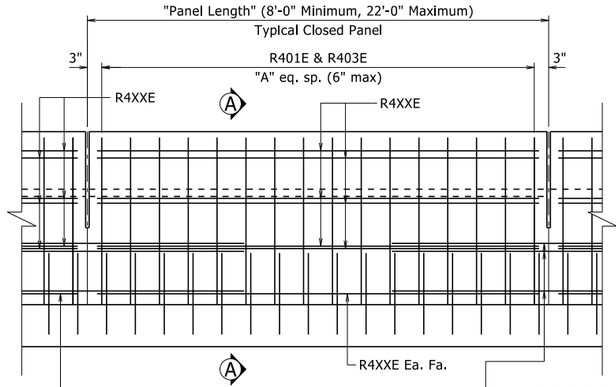

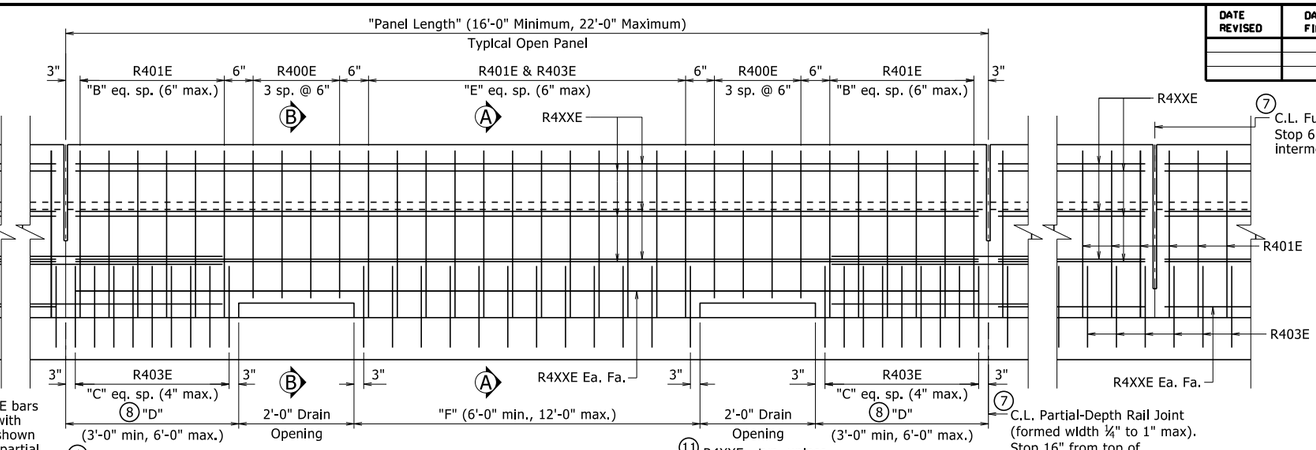

1 ELEVATION - SINGLE SLOPE TRAFFIC RAIL

¾" = 1'-0"

1. All measurements shown are along gutterline at base of rail.
2. Minimum embedment into deck/slab.
3. Eliminate recess when formliner with architectural finish is used. See Plans for additional information.
4. C.L. 1" ø formed holes for ⅞" ø bolts. See Standard Drawings GR-10 and GR-12 for additional information.
5. Only applicable for bridges with rail cast directly on bridge deck/slab surface. Increase height as necessary for sidewalks, see Plans for additional information.
6. Field bend front leg of R401E bar as required to maintain minimum 1½" front face clearance within limits of taper.
7. When optional slip forming is used: to control cracking, all rail joints must be V-grooved around the perimeter of the rail prior to concrete set and sawing. Depth of V-groove shall be ½". Sawing of the joints shall be done as soon as practical to a width of ¼", and must be controlled so it will follow the V-Groove.
8. End posts shall be the same length within a panel.

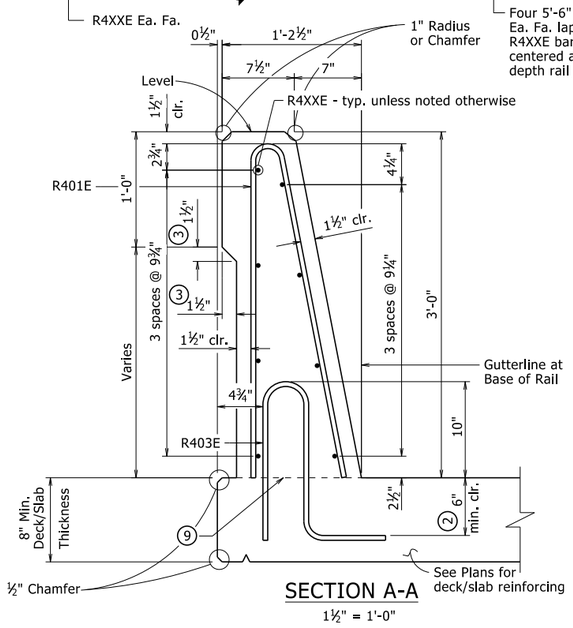

SECTION A-A

1½" = 1'-0"

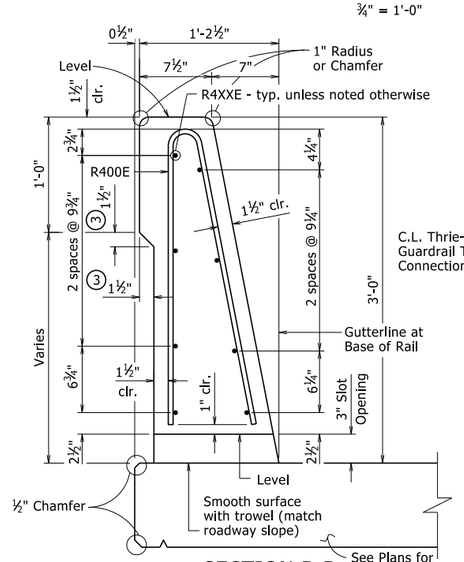

SECTION B-B

1½" = 1'-0"

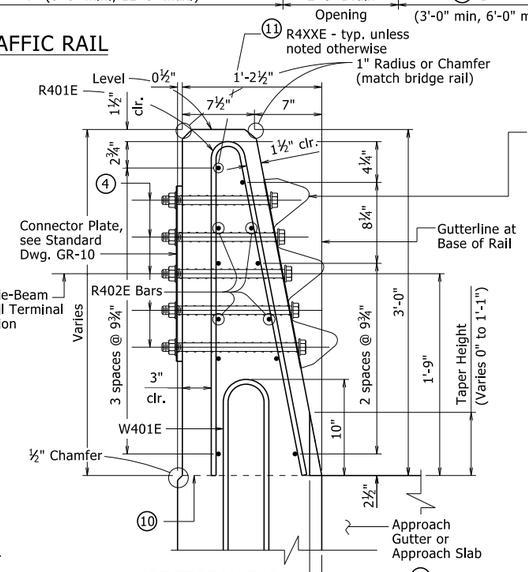

SECTION C-C

1½" = 1'-0"

Taper Width 6 (Varies 0" to 2½")

Bolt Special End Shoe to face of rail as shown. Tapered washers are not required between the head of the bolts and the sloped face of the rail. Tighten the five terminal connection bolts in a well distributed pattern to prevent damage or distortion of the thrie-beam connection. Cut bolts off after installation so as to extend no more than ¾" beyond nut. Paint ends of cut-off bolts with zinc-rich paint. This work and material will not be paid for directly but shall be considered subsidiary to associated contract items.

BENDING DIAGRAM

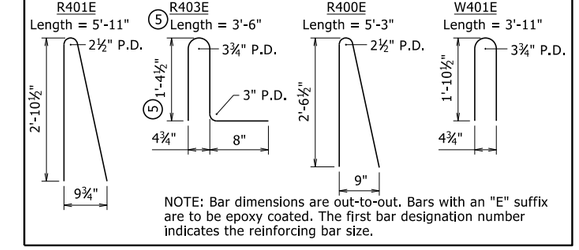

NOTE: Bar dimensions are out-to-out. Bars with an "E" suffix are to be epoxy coated. The first bar designation number indicates the reinforcing bar size.

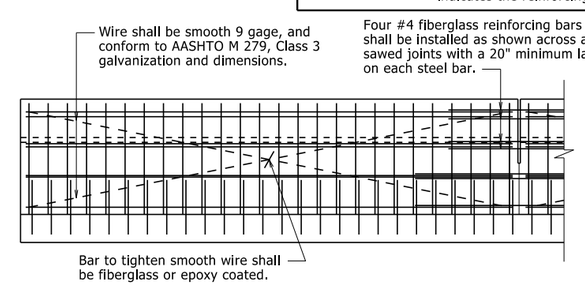

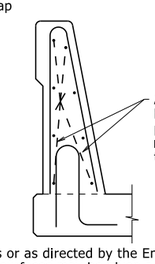

The extruded rail shall conform to the horizontal and vertical lines shown on the plans or as directed by the Engineer and shall present a smooth, uniform appearance and texture. Unless otherwise noted, exposed surfaces may be given a light brush finish or a Class 3, Textured Coating Finish in place of Class 2, Rubbed Finish.

All panels shall be braced as required to prevent racking.

Slip forming will not be allowed on bridges where formliner with architectural treatment is used unless approval from the Engineer is obtained.

DETAILS OF OPTIONAL SLIP FORMING OF BRIDGE TRAFFIC RAIL

No Scale

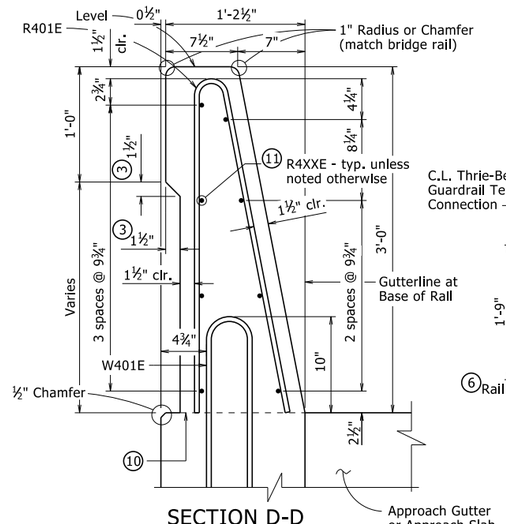

SECTION D-D

1½" = 1'-0"

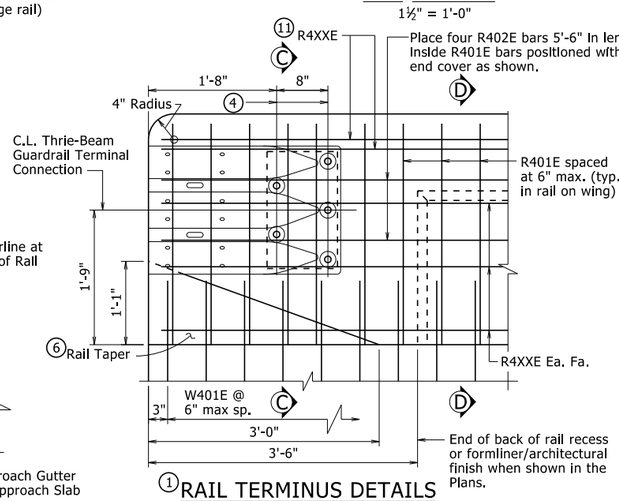

1 RAIL TERMINUS DETAILS

1" = 1'-0"

9 Required Construction Joint. Level where water flows away from rail, match roadway slope where water flows toward rail.

10 Top of Abutment Wing & Required Construction Joint (match bridge deck/slab construction joint slope). See Plans for Wing reinforcing.

11 These bars will not be included in the "Table of Variables". See Plans for details.

TABLE OF VARIABLES

Closed Rail Panels			Open Rail Panels						
Panel Length	A	R4XXE	Panel Length	B	C	D	E	F	R4XXE

See Plans for table with values.

GENERAL NOTES

This rail has been successfully evaluated by full-scale crash test to meet MASH TL-4 criteria.

Details shown are general for bridges without sidewalks. See Plans for additional details and requirements specific to bridges with sidewalks.

For Table of Variables, Rail Bar List, locations of Full and Partial Depth Rail Joints, and Wing & Rail Bar Lists, see Plans.

For location of drain openings, see Plans. Drain openings shown are not applicable for bridges with sidewalks. Drain openings will not be allowed over Railroad Right of Way, travelled roadways, and protected waterways.

Rail Terminus details, including Rail Taper, are not applicable for bridges with sidewalks or when bridge railing is continuous with roadway railing.

Scales shown are for 22"x34" drawings. When using 11"x17" drawings, reduce scale by one half.

STATE OF ARKANSAS
LICENSED PROFESSIONAL ENGINEER
No. 9235
CHARLES R. ELLIS

BRIDGE ENGINEER

This document was originally issued and sealed by Charles R. Ellis, PE No. 9235, on November 5, 2020. This copy is not a signed and sealed document.

THESE DETAILS ARE APPLICABLE UNLESS OTHERWISE SHOWN IN THE PLAN DETAILS, SPECIAL PROVISIONS, OR SUPPLEMENTAL SPECIFICATIONS.

STANDARD DETAILS FOR BRIDGE TRAFFIC RAIL TYPE SSTR36

ARKANSAS STATE HIGHWAY COMMISSION

LITTLE ROCK, ARK.

DRAWN BY:	KWY	DATE:	11/5/2020	FILENAME:	b55070.dgn
CHECKED BY:	LJB	DATE:	11/5/2020	SCALE:	As Noted
DESIGNED BY:	STD.	DATE:	-----		

DRAWING NO. 55070

PRINT DATE: 4/9/2021

REFER TO TABULATION OF QUANTITIES FOR "W" & "B" DIMENSIONS

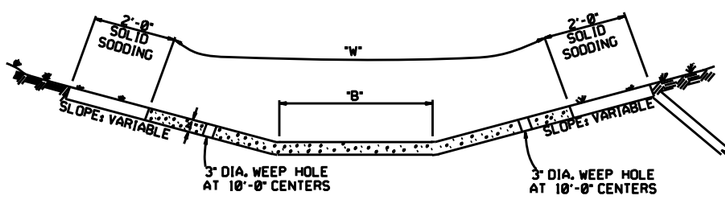

TYPE A

EXCAVATE TO NEAT LINES TO CONSTRUCT DITCH PAVING AND SOLID SODDING.

REFER TO TABULATION OF QUANTITIES FOR "W" DIMENSIONS

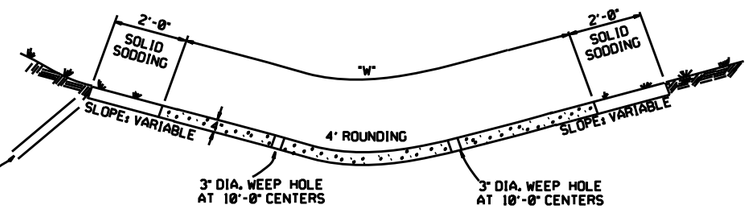

TYPE B

THE STEEL AND ADDITIONAL CONCRETE FOR THE WALLS SHALL NOT BE PAID FOR DIRECTLY, BUT SHALL BE CONSIDERED TO BE INCLUDED IN THE PRICE BID FOR "CONCRETE DITCH PAVING."

TOE WALL DEPTH MAY BE ALTERED TO 1'-0" WHEN DIRECTED BY THE ENGINEER IN ROCK EXCAVATION

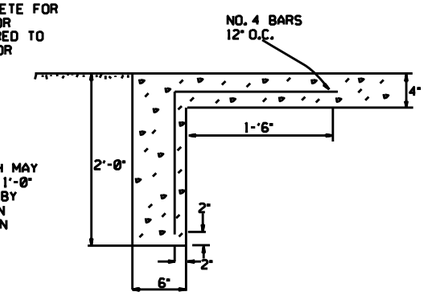

TOE WALL DETAIL FOR CONCRETE DITCH PAVING

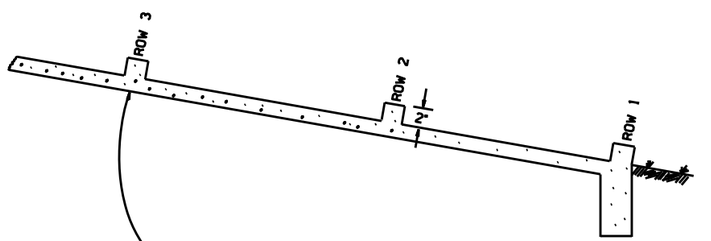

NUMBER OF ELEMENTS PER ROW VARIES WITH WIDTH OF PAVING SPECIFIED

ENERGY DISSIPATORS TO BE USED FOR THE ENTIRE LENGTH OF DITCH WHEN SLOPE OF DITCH PAVING EXCEEDS 7%. THE DISSIPATORS WILL NOT BE PAID FOR DIRECTLY, BUT SHALL BE CONSIDERED TO BE INCLUDED IN THE PRICE BID FOR CONCRETE DITCH PAVING.

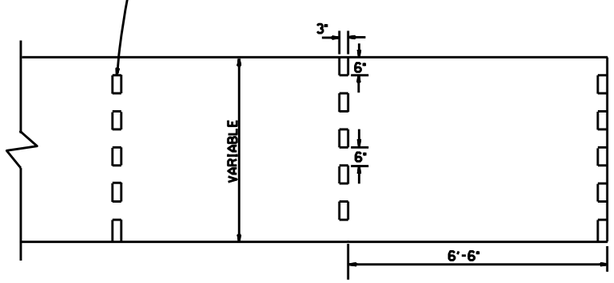

ENERGY DISSIPATORS
(NO SCALE)

GENERAL NOTES:

THE FULL WIDTH OF EACH SECTION SHALL BE POURED MONOLITHICALLY.

TOE WALLS TO BE CONSTRUCTED FULL WIDTH AT EACH END OF DITCH PAVING, AND POURED MONOLITHICALLY.

SOLID SOD ALONG DITCH PAVING TO BE PLACED WITHIN 14 DAYS OF DITCH PAVING CONSTRUCTION.

1" WIDE TRANSVERSE EXPANSION JOINTS SHALL BE PLACED IN CONCRETE DITCH PAVING AT 45' INTERVALS. THE SPACE SHALL BE FILLED WITH APPROVED JOINT FILLER COMPLYING WITH AASHTO M213.

DATE	REVISION	DATE FILMED
12-8-16	CORRECTED ENERGY DISSIPATOR DRAWING AND NOTE	
11-17-10	ADDED GENERAL NOTE	
6-2-94	ADDED GENERAL NOTE ABOUT SOLID SODDING	
11-30-8	ELIMINATED MIN. ROWS OF ELEMENTS	111-30-89
7-15-88	REVISED DISSIPATOR NOTE	653-7-15-88
4-3-87	REVISED ENERGY DISSIPATOR	671-4-3-87
1-9-87	MODIFIED NOTE ON ENERGY DISS.	532-1-9-87
11-3-86	ADDED NOTE TO ENERGY DISS.	599-12-1-86
11-1-84	ENERGY DISSIPATOR DETAILS ADDED	508-11-1-84
11-1-84	EXCAVATION DETAILS ADDED TYPED A & B	
10-2-72	REVISED AND REDRAWN	508-10-2-72

ARKANSAS STATE HIGHWAY COMMISSION

CONCRETE DITCH PAVING

STANDARD DRAWING CDP-1

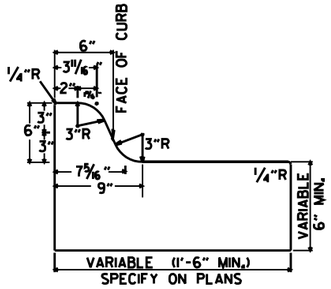

TYPE A

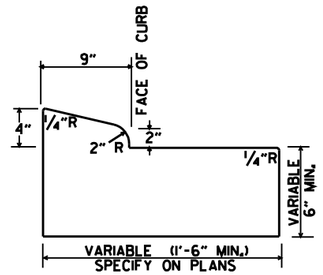

TYPE B-1

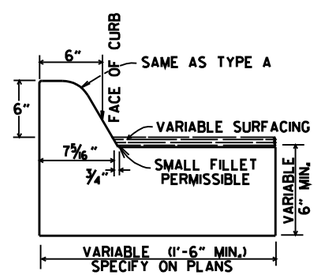

TYPE C

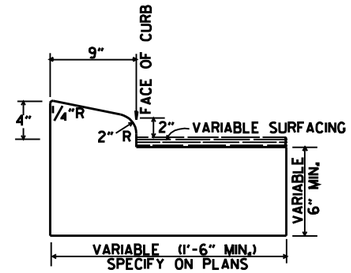

TYPE B-2

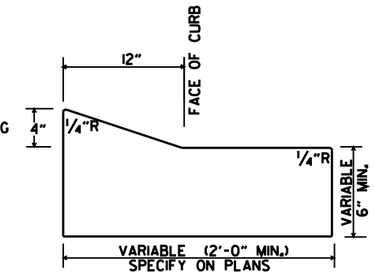

TYPE E-1

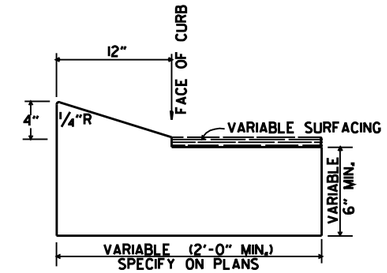

TYPE E-2

CONCRETE COMBINATION CURB AND GUTTER

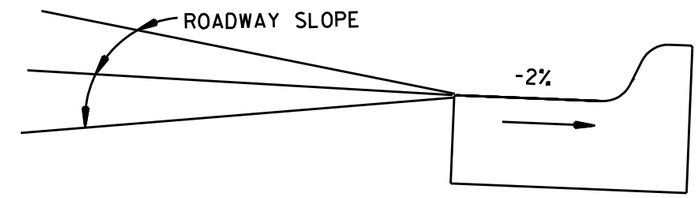

DETAIL OF GUTTER SLOPE

GUTTER SHALL BE CONSTRUCTED ON 2% SLOPE AWAY FROM ROADWAY, REGARDLESS OF ROADWAY SLOPE.

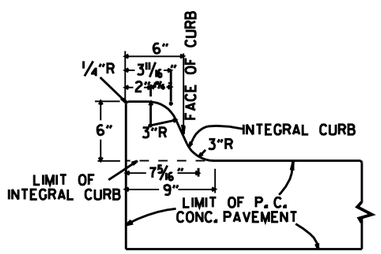

TYPE A

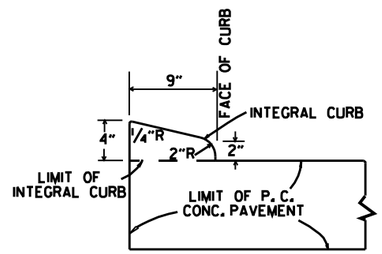

TYPE B

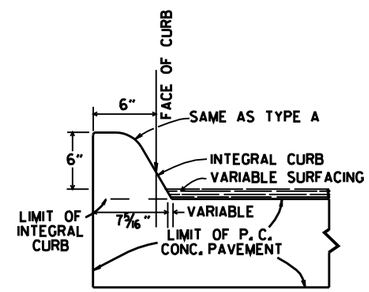

TYPE C

INTEGRAL CURB

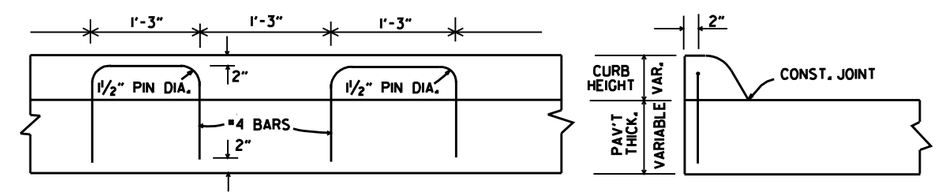

ALTERNATE CONSTRUCTION METHOD FOR INTEGRAL CURB

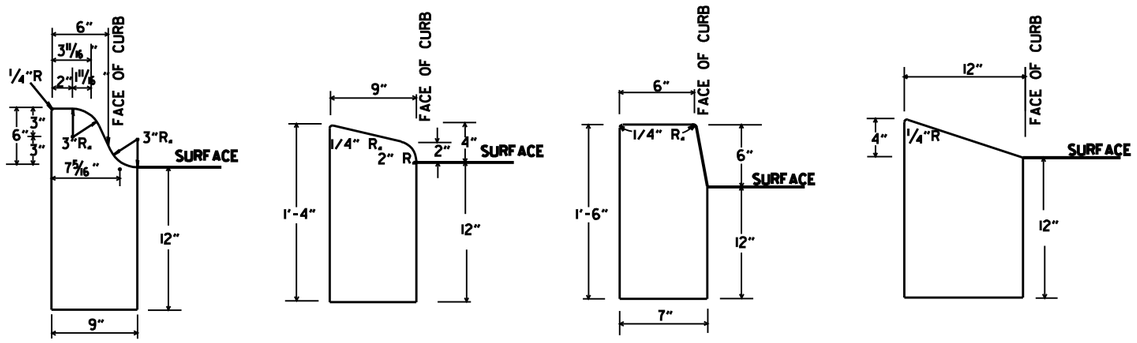

TYPE A TYPE B TYPE D TYPE E

CONCRETE CURB

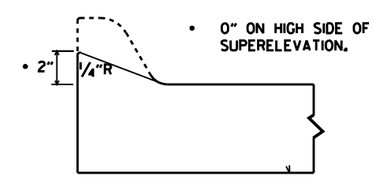

NOTE: USE MODIFIED CURB AS SPECIFIED ON STD. DR-1. COMPENSATION FOR MODIFIED CURB WILL BE CONSIDERED INCLUDED IN THE PRICE BID FOR THE TYPE OF CURB OR CURB AND GUTTER SPECIFIED.

DETAILS OF MODIFIED CURB

DATE	REVISION	DATE FILMED
11-29-07	REVISED GUTTER SLOPE & MODIFIED CURB DETAILS	
11-10-05	ADDED DETAILS OF TYPE E CURBS	
11-16-01	REVISED CONCRETE CURB TYPE B	
11-18-98	REVISED MODIFIED CURB	
6-2-94	ADDED NOTE TO SPECIAL MODIFIED CURB	
8-5-93	CORRECTED GUTTER SLOPE	8-5-93
10-1-92	ADDED DETAILS OF GUTTER SLOPE	10-1-92
5-24-90	ADDED DETAILS OF MODIFIED CURB	5-24-90
11-30-89	VARIBLE DEPTH TYPE A & B I	11-30-89
7-15-88	REVISED MODIFIED CURB	630-7-15-88
11-1-73	REVISED MODIFIED CURB	500-11-1-73
10-2-72	REVISED AND REDRAWN	512-10-2-72

ARKANSAS STATE HIGHWAY COMMISSION

CURBING DETAILS

STANDARD DRAWING CG-1

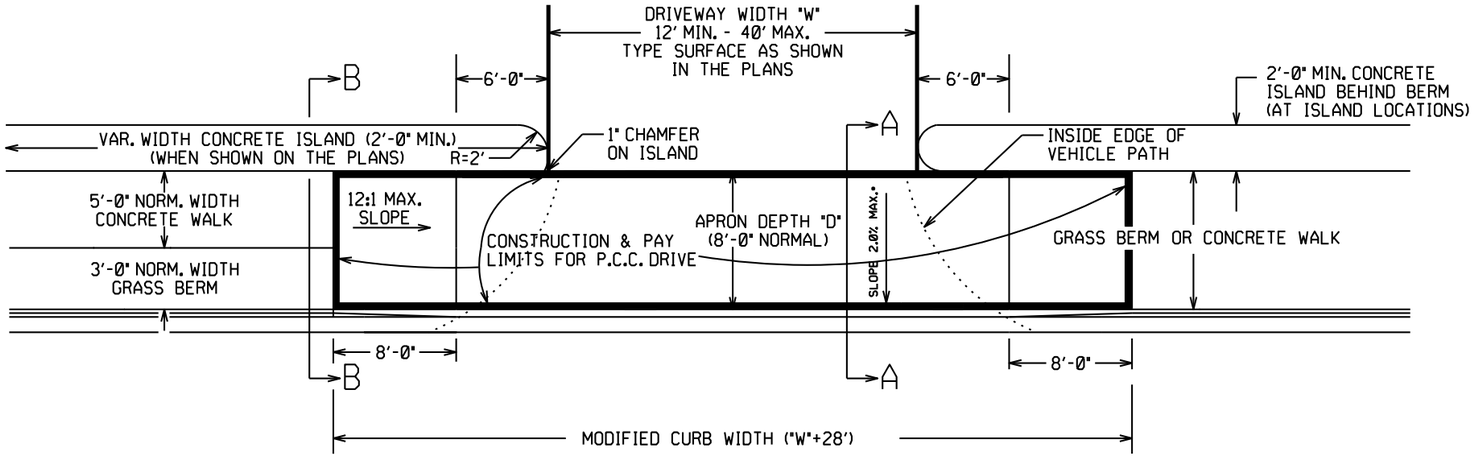

PLAN VIEW

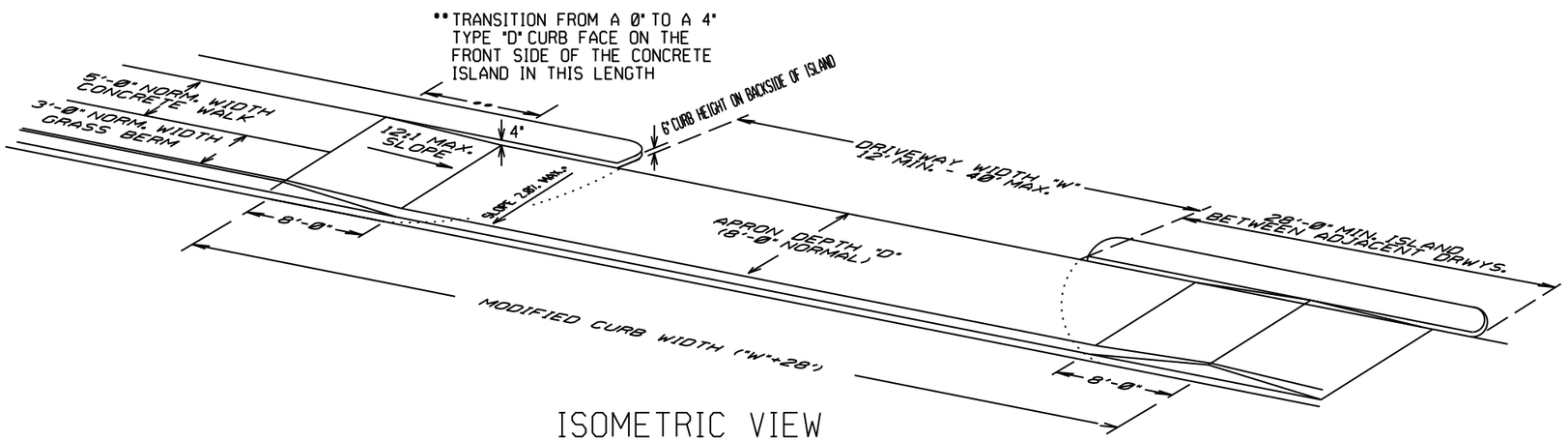

ISOMETRIC VIEW

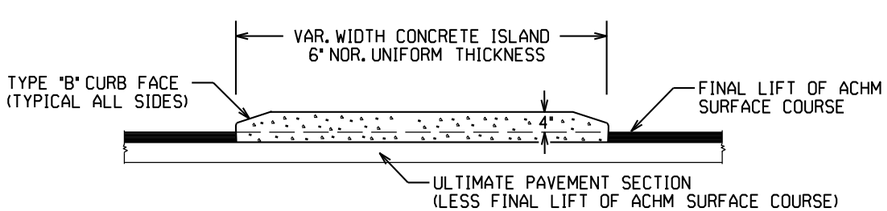

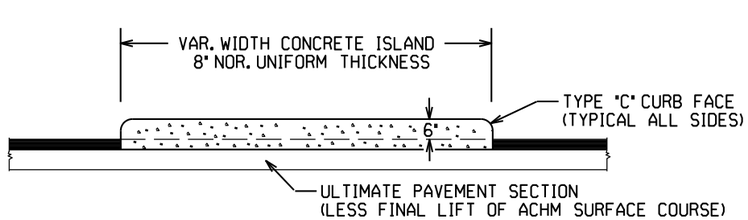

CURBED ISLANDS FOR CHANNELIZATION

CONCRETE ISLAND NOTES:

1. REFER TO PLANS FOR TYPE OF CURB FACE TO BE USED. NO DIRECT PAYMENT WILL BE MADE FOR THE CURB FACES SHOWN ON THE ISLAND DETAILS. PAYMENT FOR THE CURB FACE WILL BE INCLUDED IN THE UNIT PRICE BID FOR THE ITEM "CONCRETE ISLAND".

2. TRANSVERSE EXPANSION JOINTS, NOT LESS THAN 1/2" WIDE, SHALL BE PLACED AT MINIMUM INTERVAL OF 45'. TRANSVERSE JOINT SHALL BE CONSTRUCTED USING A JOINT FILLER COMPLYING WITH AASHTO M213.

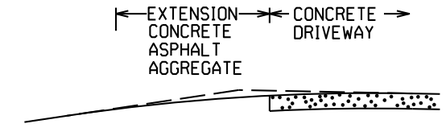

EXTENSION TYPICAL SECTIONS

1: CONCRETE - 6" P.C. CONCRETE DRIVEWAY

2: ASPHALT - 2" ACHM SURFACE COURSE (1/2")
4" ACHM BINDER COURSE (1") OR
4" ACHM BASE COURSE (1-1/2")

3: ASPHALT - 2" ACHM SURFACE COURSE (1/2")
7" AGGREGATE BASE COURSE

4: AGGREGATE - 6" AGGREGATE BASE COURSE

THE TYPE OF EXTENSION SHALL BE AS SHOWN IN THE PLANS. THE CONTRACTOR MAY, WITH THE APPROVAL OF THE ENGINEER, SUBSTITUTE A LOWER NUMBERED TYPE OF EXTENSION IN LIEU OF THE TYPE SPECIFIED IN THE PLANS, BUT AT NO ADDITIONAL COST TO THE DEPARTMENT.

DRIVEWAY EXTENSION DETAILS

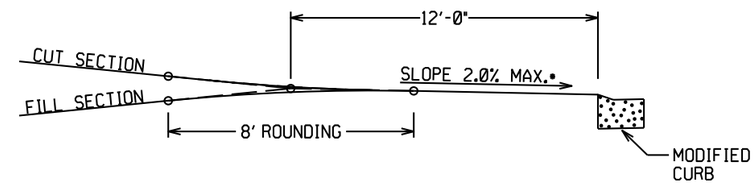

DRIVEWAY VERTICAL ALIGNMENT DETAILS

• NOTE: DRIVEWAYS MAY NOT BE SLOPED AWAY FROM THE ROADWAY UNLESS APPROVED BY THE ENGINEER.

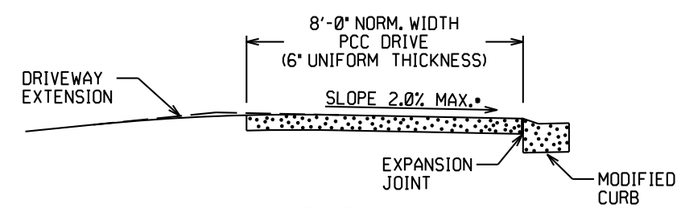

SECTION A-A

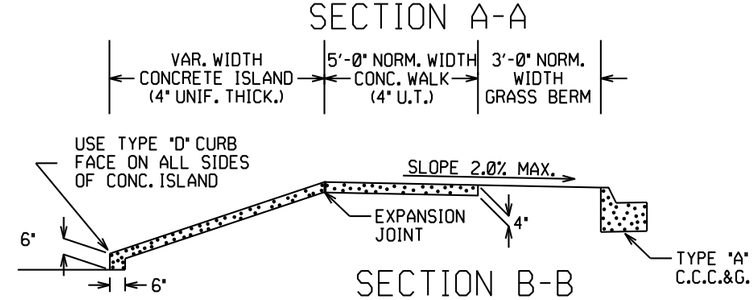

SECTION B-B

CURBED ISLAND BEHIND WALK

DATE REV	DATE FILMED	DESCRIPTION
5-19-22		REVISED ISLAND NOTES
11-07-19		REVISED WALK DETAILS
2-27-14		REVISED PLAN & ISOMETRIC VIEW
11-29-07		ADDED CHANNELIZATION ISLAND WITH TYPE C CURB FACE & REVISED DRIVEWAY SLOPE NOTE & VERTICAL ALIGNMENT DETAIL
11-10-05		REV. APRON SLOPE & DEPTH OF AGG. BASE.
8-22-02		ADDED ISLAND DETAILS & NOTES
3-30-00		REV. MOD. CURB WIDTH & TRANS. NOTE
11-19-98		REVISED NOTES
11-18-98		REDRAWN AND REISSUED

ARKANSAS STATE HIGHWAY COMMISSION

DETAILS OF DRIVEWAYS & ISLANDS

STANDARD DRAWING DR-1

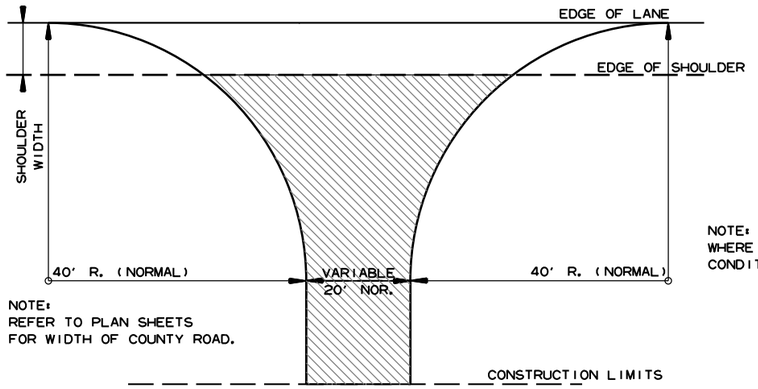

NOTE:
REFER TO PLAN SHEETS
FOR WIDTH OF COUNTY ROAD.

NOTE: TURNOUTS SHALL BE MODIFIED WHERE NECESSARY TO MEET LOCAL CONDITIONS AS DIRECTED BY THE ENGINEER.

ACHM SURFACE COURSE (1/2") (220 LBS. PER SQ. YD.) AND AGGREGATE BASE COURSE (CLASS 7) 7" COMP. DEPTH, UNLESS OTHERWISE SPECIFIED IN PLANS.

DETAIL FOR COUNTY ROAD TURNOUTS OPEN SHOULDER SECTION

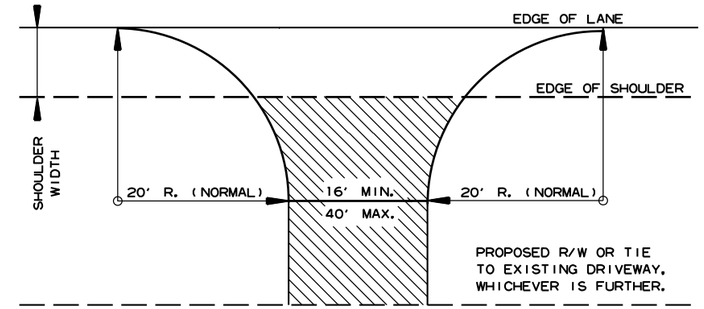

NOTE: TURNOUTS AND PRIVATE DRIVES SHALL BE MODIFIED WHERE NECESSARY TO MEET LOCAL CONDITIONS AS DIRECTED BY THE ENGINEER.

ACHM SURFACE COURSE (1/2") (220 LBS. PER SQ. YD.) AND AGGREGATE BASE COURSE (CLASS 7) 7" COMP. DEPTH IF ASPHALT OR GRAVEL DRIVE EXISTING; OR 6" CONCRETE IF CONCRETE DRIVE EXISTING.

DETAIL FOR DRIVEWAY TURNOUTS OPEN SHOULDER SECTION (ARTERIALS)

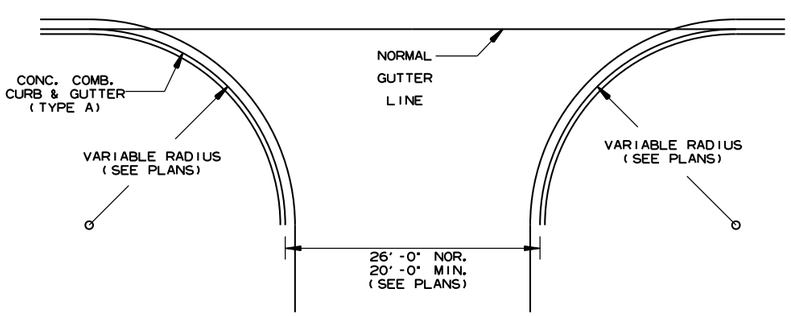

NOTE:
PAVEMENT STRUCTURE FOR STATE HIGHWAYS, CITY STREETS, & COUNTY ROADS TO BE SAME AS MAIN LANES.

DETAIL OF TURNOUTS, ASPHALT STREETS, COUNTY ROADS & STATE HIGHWAYS CURB & GUTTER SECTION

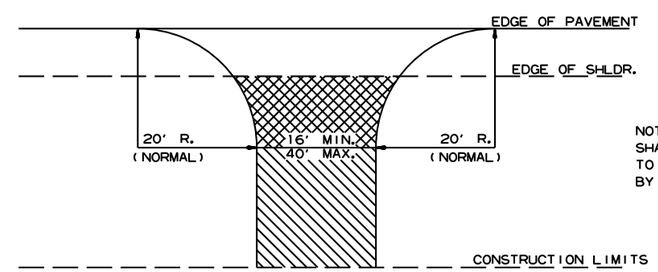

NOTE: TURNOUTS AND PRIVATE DRIVES SHALL BE MODIFIED WHERE NECESSARY TO MEET LOCAL CONDITIONS AS DIRECTED BY THE ENGINEER.

ASPHALT CONCRETE HOT MIX SURFACE COURSE (220 LBS. PER SQ. YD.) AGGREGATE BASE COURSE (CLASS 7) 7" COMP. DEPTH IF ASPHALT DRIVE EXIST OR 6" CONCRETE IF CONCRETE DRIVE EXIST.

AGGREGATE BASE COURSE (CLASS 7) 9" COMP. DEPTH OR CONFORM TO EXISTING DRIVEWAY

DETAIL FOR DRIVEWAY TURNOUTS (COLLECTORS)

DATE REV	DATE FILMED	DESCRIPTION
5-19-22		ISSUED

ARKANSAS STATE HIGHWAY COMMISSION

DETAILS OF DRIVEWAYS & STREET TURNOUTS

STANDARD DRAWING DR-2

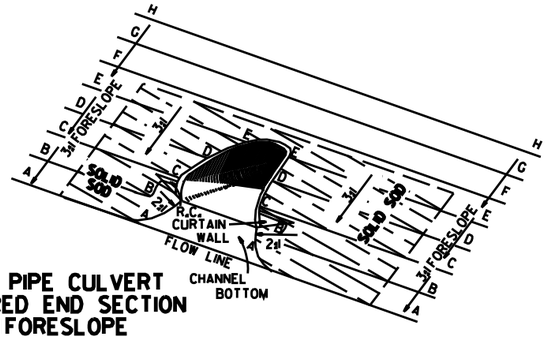

TYPICAL PIPE CULVERT
WITH FLARED END SECTION
& 3:1 FORESLOPE

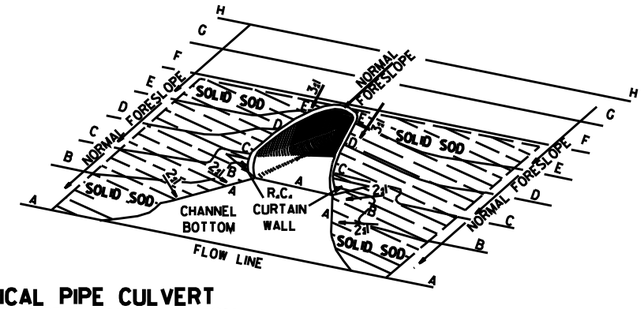

TYPICAL PIPE CULVERT
WITH FLARED END SECTION
& FLATTENED ADJACENT SLOPES

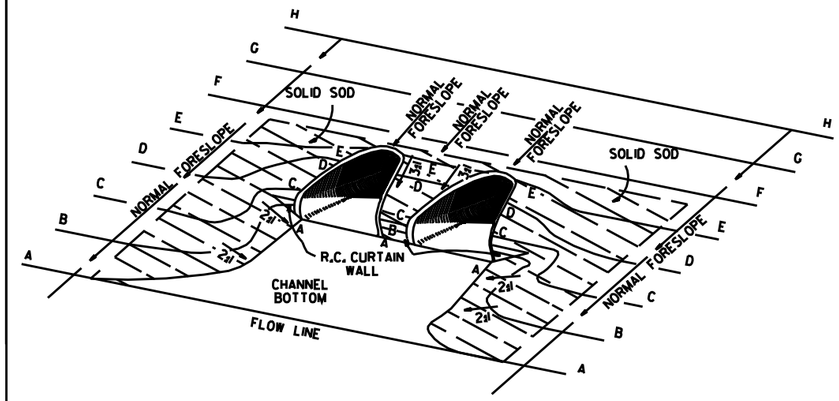

TYPICAL MULTIPLE PIPE CULVERT
WITH FLARED END SECTIONS
& FLATTENED ADJACENT SLOPES

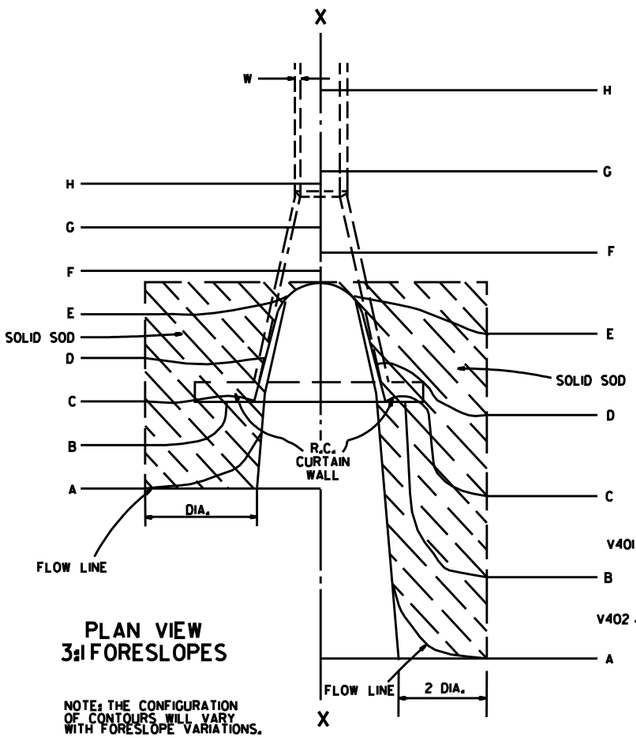

PLAN VIEW
3:1 FORESLOPES

NOTE: THE CONFIGURATION OF CONTOURS WILL VARY WITH FORESLOPE VARIATIONS.

PLAN VIEW
FLATTENED FORESLOPES

R.C. CURTAIN WALL DIMENSIONS & QUANTITIES

PIPE DIA.	H_1	L_1	L	L (DBL.)/2	SINGLE R.C.P.C. CONC.	SINGLE R.C.P.C. REINF. STEEL	DOUBLE R.C.P.C. CONC.	DOUBLE R.C.P.C. REINF. STEEL
					CU. YDS.	LBS.	CU. YDS.	LBS.
18"	11½"	3'-5"	8'-0"	6'-3"	0.31	27.7	0.45	39.5
24"	1'-0½"	4'-6"	9'-6"	7'-6"	0.37	33.4	0.53	48.0
30"	1'-3½"	5'-7"	11'-0"	9'-0"	0.45	39.0	0.67	59.0
36"	1'-7"	6'-8"	13'-0"	10'-6"	0.58	52.6	0.83	73.9
42"	2'-1½"	7'-3"	15'-6"	12'-0"	0.82	77.1	1.10	100.7
48"	2'-5"	7'-10"	17'-0"	13'-0"	0.98	94.9	1.27	120.4
54"	2'-9½"	8'-5"	18'-6"	14'-0"	1.16	115.8	1.47	143.7
60"	3'-4"	9'-0"	20'-6"	15'-6"	1.47	149.7	1.84	180.3
72"	4'-5"	10'-2"	25'-6"	18'-6"	2.31	232.6	2.73	271.0

NOTE: QUANTITIES SHOWN ARE FOR ONE (1) CURTAIN WALL.

REINFORCING STEEL SCHEDULE

PIPE DIA.	SINGLE R.C. PIPE CULVERT H401 L	NO.	H402 L	NO.	V401 L	NO.	V402 L	NO.	DOUBLE R.C. PIPE CULVERT H401 L	NO.	H402 L	NO.	H403 L	NO.	V401 L	NO.	V402 L	NO.
18"	7'-8"	2	1'-11½"	4	1'-7½"	8	8"	8	12'-2"	2	1'-11½"	4	8"	2	1'-7½"	10	8"	14
24"	9'-2"	2	2'-2"	4	1'-8½"	10	8"	9	14'-8"	2	2'-2"	4	8"	2	1'-8½"	12	8"	18
30"	10'-8"	2	2'-4½"	4	1'-11½"	10	8"	12	17'-8"	2	2'-4½"	4	8"	2	1'-11½"	14	8"	22
36"	12'-8"	2	2'-10"	6	2'-3"	12	8"	14	20'-8"	2	2'-10"	6	8"	3	2'-3"	14	8"	28
42"	15'-2"	2	3'-9½"	8	2'-9½"	16	8"	15	23'-8"	2	3'-9½"	8	8"	4	2'-9½"	18	8"	30
48"	16'-8"	2	4'-3"	10	3'-1"	18	8"	16	25'-8"	2	4'-3"	10	8"	5	3'-1"	20	8"	32
54"	18'-2"	2	4'-8½"	12	3'-5½"	20	8"	17	27'-8"	2	4'-9"	12	8"	6	3'-5½"	22	8"	34
60"	20'-2"	2	5'-5"	14	4'-0"	24	8"	18	30'-8"	2	5'-5"	14	8"	7	4'-0"	26	8"	36
72"	25'-2"	2	7'-4"	18	5'-1"	30	8"	20	36'-8"	2	7'-4"	18	8"	9	5'-1"	33	8"	40

ALL REINFORCING STEEL #4 BARS @ 6" O.C.

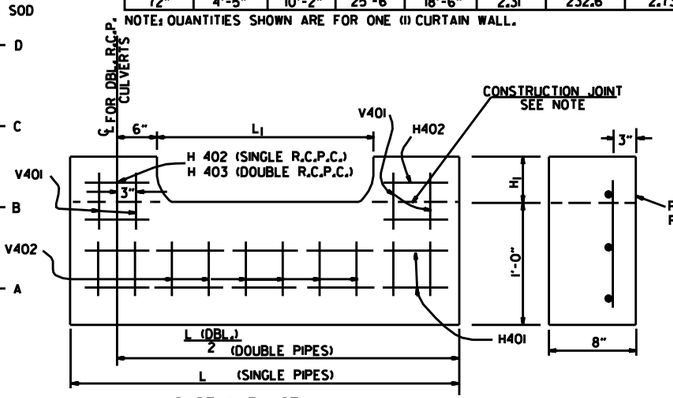

CAST-IN-PLACE

NOTE: THE PORTION OF THE R.C. CURTAIN WALL BENEATH THE FLARED END SECTION (LOWER 1'-0") SHALL BE PLACED MONOLITHICALLY. THE FLARED END SECTION SHALL THEN BE SET IN PLACE & THE REMAINING PORTIONS OF THE R.C. CURTAIN WALL PLACED.

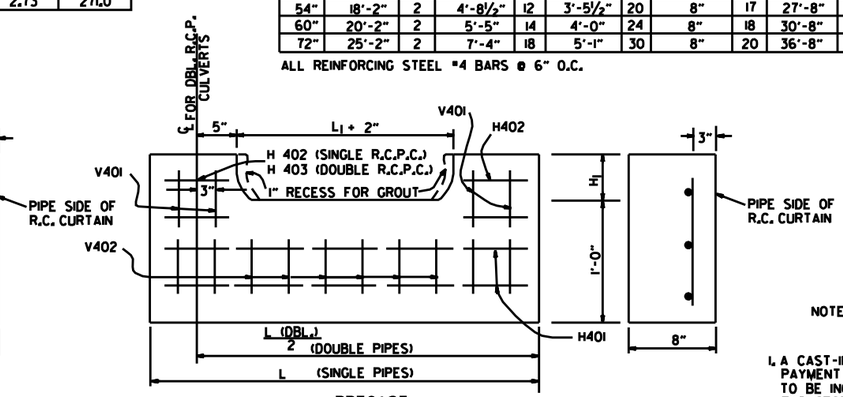

PRECAST

NOTE: THE PRECAST CURTAIN WALL WILL BE SET AND BACKFILLED WITH COMPACTED MATERIAL. THE FLARED END SECTION SHALL THEN BE SET IN PLACE AND THE 1" RECESS FILLED WITH GROUT. WHERE "L" EXCEEDS 11' THE CURTAIN WALL MAY BE CAST IN TWO (2) OR MORE SECTIONS. THE METHOD OF JOINING THE SECTIONS FOR INSTALLATION SHALL BE APPROVED BY THE ENGINEER.

R.C. CURTAIN WALL DETAILS

SOLID SODDING

PIPE DIA.	SINGLE R.C.P.C. 3:1	4:1	6:1	DOUBLE R.C.P.C. 3:1	4:1	6:1
	SQ. YDS.			SQ. YDS.		
18"	5	7	12	6	8	13
24"	8	12	19	9	13	20
30"	13	18	29	14	19	30
36"	17	26	41	18	28	43
42"	23	35	55	25	37	57
48"	29	46	68	31	48	70
54"	35	57	85	37	59	87
60"	45	62	104	48	65	107
72"	64	92	156	67	95	159

NOTE: QUANTITIES SHOWN ABOVE ARE FOR ONE (1) END OF F.E.S.

GENERAL NOTES

1. A CAST-IN-PLACE OR PRECAST CURTAIN WALL MAY BE USED. PAYMENT FOR THE CURTAIN WALL SHALL BE CONSIDERED TO BE INCLUDED IN THE UNIT PRICE BID EACH FOR FLARED END SECTIONS OF THE SEVERAL SIZES, WHICH PRICE SHALL BE FULL COMPENSATION FOR FURNISHING ALL MATERIALS INCLUDING REINFORCING STEEL AND CONCRETE; FOR FORMS, MIXING AND PLACING; FOR EXCAVATION AND BACKFILL, AND FOR ALL LABOR, TOOLS, EQUIPMENT AND INCIDENTALS NECESSARY TO COMPLETE THE WORK.
2. ALL EXPOSED EDGES SHALL BE CHAMFERED ¾".
3. CONCRETE FOR CURTAIN WALL SHALL MEET THE REQUIREMENTS FOR CLASS A OR S CONCRETE AS PROVIDED IN SECTION 802 OF THE STANDARD SPECIFICATIONS OR FOR PAVING CONCRETE AS PROVIDED IN SECTION 501 OF THE STANDARD SPECIFICATIONS.
4. WELDED WIRE MESH 3 × 3 W/10 × W10 MAY BE USED IN LIEU OF REINFORCING BARS.

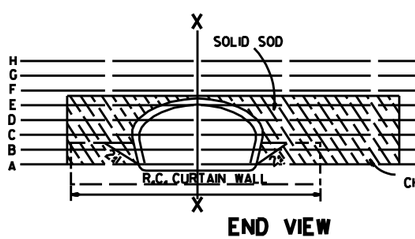

END VIEW

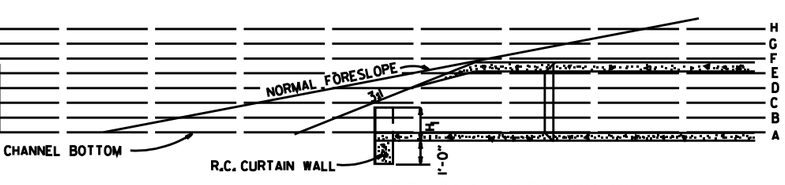

SECTIONAL VIEW "X-X"

DATE	REVISION	FILMED
10-18-96	ADDED NOTE TO SOLID SODDING	
10-12-95	CORRECTED SPELLING	
11-3-94	ADDED GENERAL NOTE NO. 4	
8-15-91	REV. CURTAIN WALL QUANT. STEEL SCH. & SOLID SOD QUANT.	
3-2-81	ALLOW PRECAST IN 2 OR MORE PIECES CHAMFER EDGES	
5-15-80	ADDED PRECAST WALL & GENERAL NOTES	
10-2-72	REVISED AND REDRAWN	

ARKANSAS STATE HIGHWAY COMMISSION

FLARED END SECTION

STANDARD DRAWING FES-1

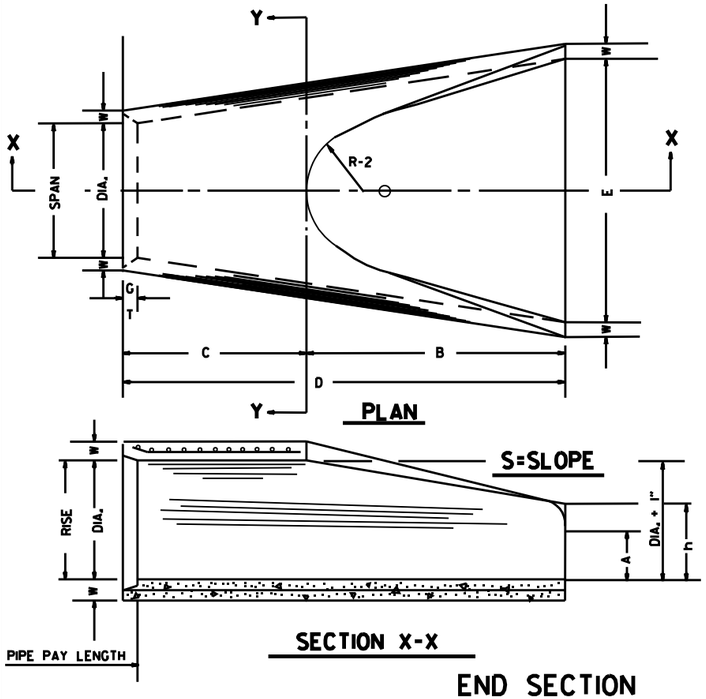

TABLE OF DIMENSIONS

DIA.	WALL	A	B	C	D	E	S	DIA. + 1"	P	R-1	R-2	G-T	WT.	h
18"	2 1/2"	9"	2'-3"	3'-10"	6'-1"	3'-0"	3:1	19"	29"	15 1/2"	12"	2"	1000	1'-0 1/2"
24"	3"	9 1/2"	3'-7 1/2"	2'-6"	6'-1 1/2"	4'-0"	3:1	25"	33 3/16"	16 11/16"	14"	2 1/2"	1600	1'-1 1/2"
30"	3 1/2"	1'-0"	4'-6"	1'-7 3/4"	6'-1 3/4"	5'-0"	3:1	31"	37"	18 1/2"	15"	3 1/4"	1940	1'-4 5/8"
36"	4"	1'-3"	5'-3"	2'-10 3/4"	8'-1 3/4"	6'-0"	3:1	37"	47 11/16"	24 5/16"	20"	3 1/2"	4100	1'-8"
42"	4 1/2"	1'-9"	5'-3"	2'-11"	8'-2"	6'-6"	3:1	43"	53 7/8"	27 1/2"	22"	3 1/2"	5380	2'-2 1/2"
48"	5"	2'-0"	6'-0"	2'-2"	8'-2"	7'-0"	3:1	49"	56 1/2"	28 1/2"	22"	3 1/2"	6550	2'-6"
54"	5 1/2"	2'-4"	6'-6"	1'-10"	8'-4"	7'-6"	3:1	55"	65 1/2"	33 1/8"	24"	4"	8750	2'-10 1/2"
60"	6"	2'-10"	6'-6"	1'-10"	8'-4"	8'-0"	3:1	61"	72 1/2"	36 11/16"	24"	4"	9270	3'-5"
72"	7"	3'-10"	6'-6"	1'-10"	8'-4"	9'-0"	3:1	73"	77 11/16"	38 15/16"	24"	5"	13250	4'-6"

ARCH PIPE

EQUIV. DIA.	• SPAN AASHTO M 206	• SPAN AHD NOMINAL	• RISE AASHTO M 206	• RISE AHD NOMINAL	W	A	B	C	D	E	P	R2	G-T	S
INCHES														
15	18	18	11	11	2"	4"	2'-0"	4'-0"	6'-0"	3'-0"	29"	12"	1 1/2"	2 1/2:1
18	22	22	13 1/2	14	2 1/2"	5"	2'-0"	4'-1"	6'-1"	3'-6"	32 1/8"	13"	2 1/2"	2 1/2:1
21	26	26	15 1/2	16	2 3/4"	7"	2'-3"	3'-10"	6'-1"	4'-0"	34 1/8"	14"	2 1/2"	2 1/2:1
24	28 1/2	29	18	18	3"	9"	2'-3"	3'-10"	6'-1"	5'-0"	36 11/16"	15"	2 1/2"	2 1/2:1
30	36 1/4	36	22 1/2	23	3 1/2"	10"	3'-1"	3'-0 1/2"	6'-1 1/2"	6'-0"	47 11/16"	20"	3"	2 1/2:1
36	43 3/4	44	26 5/8	27	4"	10 1/2"	4'-0"	2'-11 1/2"	6'-1 1/2"	6'-6"	54 7/16"	22"	3 1/2"	2 1/2:1
42	51 1/8	51	31 5/16	31	4 1/2"	11 1/2"	4'-7"	1-10 1/4"	6'-5 1/4"	7'-2"	59 1/2"	23"	3 3/4"	2 1/2:1
48	58 1/2	59	36	36	5"	1'-3"	5'-3"	2'-10 3/4"	8'-1 3/4"	7'-10"	70 3/16"	24"	4 1/4"	2 1/2:1
54	65	65	40	40	5 1/2"	1'-7"	5'-3"	2'-11"	8'-2"	8'-6"	72 1/16"	24"	4 3/4"	2 1/4:1
60	73	73	45	45	6"	1'-10"	5'-6"	2'-8"	8'-2"	9'-0"	77 11/16"	24"	5"	2 1/4:1

• THE MEASURED SPAN AND RISE SHALL NOT VARY MORE THAN ± 2 PER CENT FROM THE VALUES SPECIFIED BY AASHTO M 206.

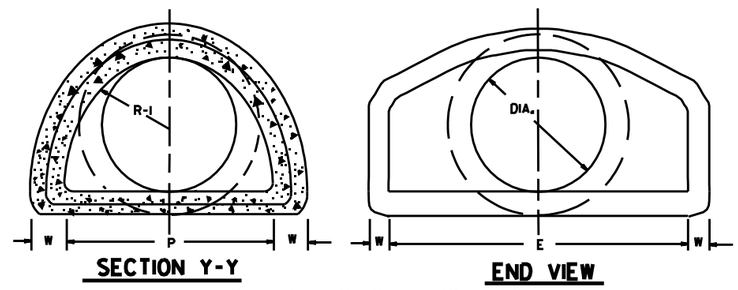

NOTE: TONGUE END ON UPSTREAM SECTION
GROOVE END ON DOWNSTREAM SECTION

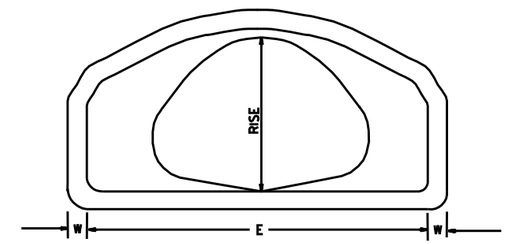

END VIEW
CONCRETE ARCH PIPE

END SECTION
FOR REINFORCED CONCRETE PIPE CULVERTS

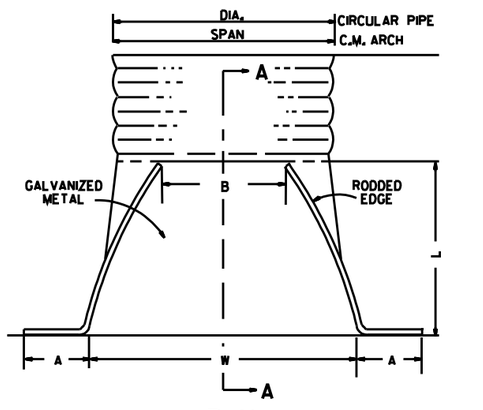

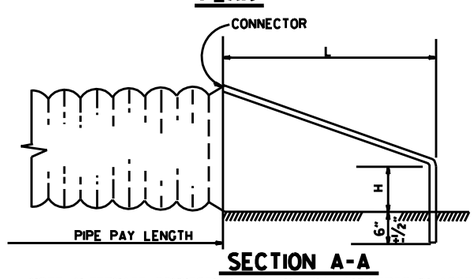

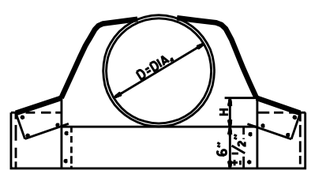

CIRCULAR PIPE

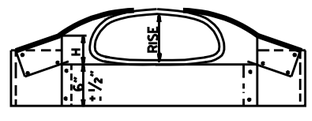

C.M. ARCH PIPE

CIRCULAR PIPE

D. DIA.	GAUGE	A 1" ±	B. MAX.	H 1" ±	L 1 1/2" ±	W 2" ±	S
		INCHES					
12	16	6	6	6	21	24	2 1/2:1
15	16	7	8	6	26	30	2 1/2:1
18	16	8	10	6	31	36	2 1/2:1
21	16	9	12	6	36	42	2 1/2:1
24	16	10	13	6	41	48	2 1/2:1
30	14	12	16	8	51	60	2 1/2:1
36	14	14	19	9	60	72	2 1/2:1
42	12	16	22	11	69	84	2 1/2:1
48	12	18	27	12	78	90	2 1/2:1
54	12	18	30	12	84	102	2:1
60	12	18	33	12	87	114	1 3/4:1
66	12	18	36	12	87	120	1 1/2:1
72	12	18	39	12	87	126	1 1/3:1

C.M. ARCH PIPE

EQUIV. DIA.	SPAN	RISE	A 1" ±	B MAX.	H 1" ±	L 1 1/2" ±	W 2" ±	S	GAUGE
			INCHES						
15"	17	13	7	9	6	19	30	2 1/2:1	16
18"	21	15	7	10	6	23	36	2 1/2:1	16
21"	24	18	8	12	6	28	42	2 1/2:1	16
24"	28	20	9	14	6	32	48	2 1/2:1	16
30"	35	24	10	16	6	39	60	2 1/2:1	14
36"	42	29	12	18	8	46	75	2 1/2:1	14
42"	49	33	13	21	9	53	85	2 1/2:1	12
48"	57	38	18	26	12	63	90	2 1/2:1	12
54"	64	43	18	30	12	70	102	2 1/4:1	12
60"	71	47	18	33	12	77	114	2 1/4:1	12

NOTE: ALTERNATE CONNECTIONS TO THE PIPE CULVERTS, IN ACCORDANCE WITH MANUFACTURER'S STANDARD PRACTICES, MAY BE MADE SUBJECT TO THE APPROVAL OF THE ENGINEER.

END SECTIONS FOR CORRUGATED METAL PIPE CULVERTS

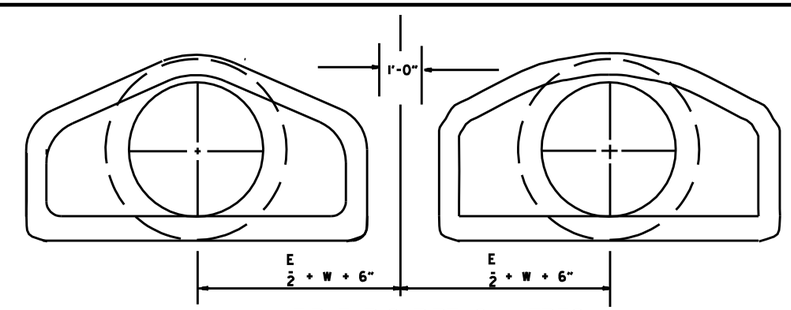

MULTIPLE R.C. PIPE CULVERTS

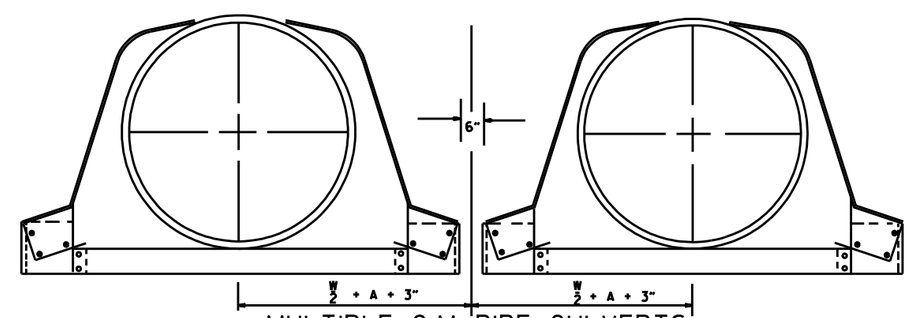

MULTIPLE C.M. PIPE CULVERTS

DATE	REVISION	FILMED
10-18-96	REVISED ASTM REF. TO AASHTO	
5-15-80	REVISED DISTANCE BETWEEN MULTIPLE R.C.P. F.E.S.	664-5-15-80
7-14-78	C.M. ARCH SIZES TO CONFORM WITH AASHTO SIZES	752-7-14-78
8-22-75	ADDED MULTIPLE PIPE CULVERTS	517-8-22-75
12-5-74	REMOVED NOTE RE REINF. FOR R.C. F.E.S.	500-12-5-74
5-24-73	CMP END SECTION, SHOW PIPE PAY LENGTH	627-5-24-73
10-2-72	REVISED AND REDRAWN	760-10-2-72

ARKANSAS STATE HIGHWAY COMMISSION

FLARED END SECTION

STANDARD DRAWING FES-2

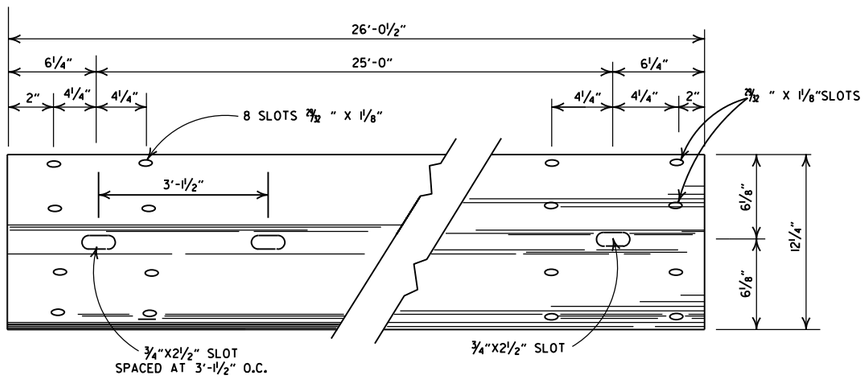

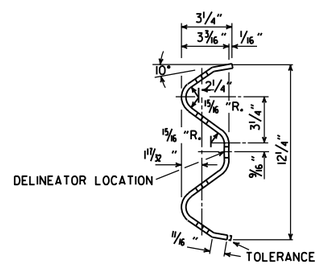

DETAILS OF W-BEAM GUARDRAIL

RAIL SECTION OF CLOSELY SIMILAR DIMENSIONS AND COMPARABLE STRENGTH MAY BE SUBSTITUTED IF APPROVED BY THE ENGINEER.

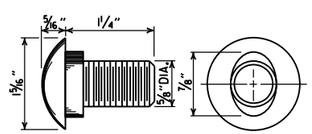

SPLICE BOLT
POST BOLT - SAME EXCEPT LENGTH

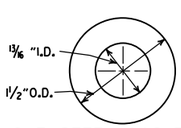

CUT STEEL WASHER

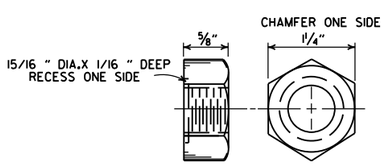

NUT

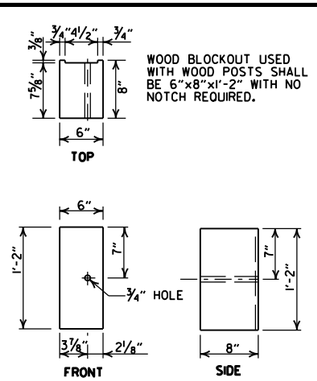

WOOD BLOCKOUT USED WITH WOOD POSTS SHALL BE 6"x8"x1'-2" WITH NO NOTCH REQUIRED.

WOOD BLOCKOUT (W-BEAM)

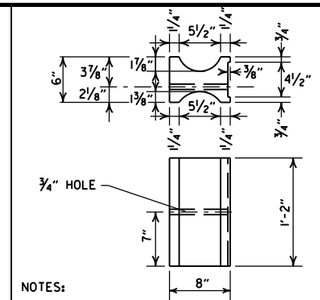

NOTES:

1. SIMILAR SHAPED PLASTIC BLOCKOUTS MAY BE USED AS LONG AS THEY MEET REQUIREMENTS FOR MANUAL FOR ASSESSING SAFETY HARDWARE (MASH).
2. DIMENSIONS ARE SUBJECT TO MANUFACTURERS TOLERANCES.

PLASTIC BLOCKOUT (W-BEAM)

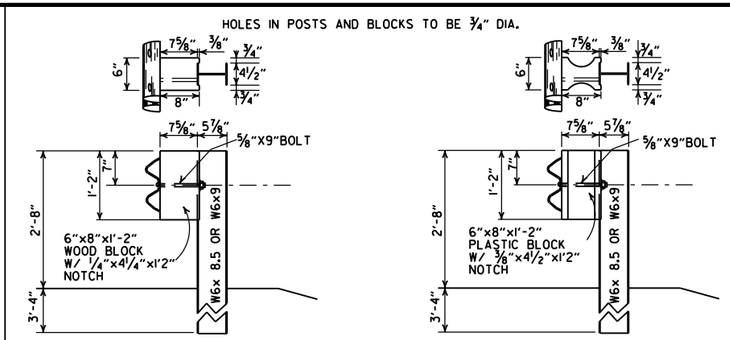

WOOD BLOCKOUT CONNECTIONS

PLASTIC BLOCKOUT CONNECTIONS

DETAILS OF STEEL LINE POST CONNECTIONS (W-BEAM)

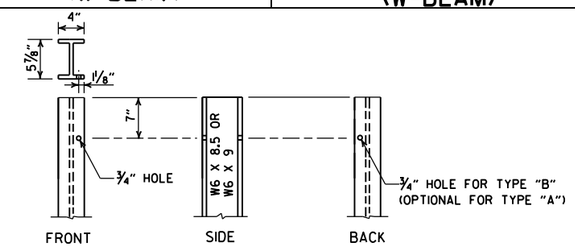

STEEL POST

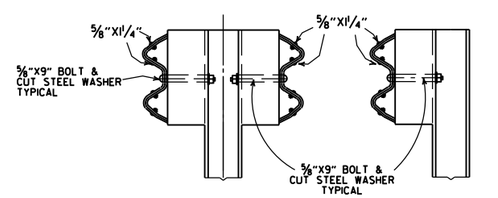

DETAILS OF STEEL LINE POST CONNECTIONS (W-BEAM)

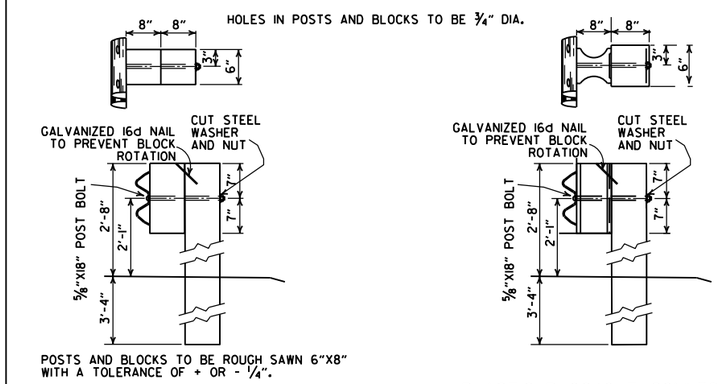

WOOD BLOCKOUT CONNECTIONS

PLASTIC BLOCKOUT CONNECTIONS

DETAILS OF WOOD LINE POST CONNECTIONS (W-BEAM)

-GENERAL NOTES-

ALL BOLTS SHALL BE SUFFICIENT LENGTH TO EXTEND THROUGH THE FULL THICKNESS OF THE NUT AND NO MORE THAN ¾" BEYOND IT.

WHERE W-BEAM GUARDRAIL CONTINUES, THE INTERMEDIATE SECTIONS SHALL HAVE A POST SPACING OF 6'-3" UNLESS OTHERWISE NOTED.

W-BEAM GUARDRAIL REPRESENTING INTERMEDIATE SECTIONS WILL BE MEASURED ALONG THE ROADWAY FACE FROM CENTERLINE OF POST TO CENTERLINE OF POST.

USE W-BEAM GUARDRAIL COMPONENTS OF SAME MATERIAL FOR ENTIRE JOB. FOR EXTENSIONS OR MODIFICATION OF EXISTING GUARDRAIL, W-BEAM GUARDRAIL COMPONENTS OF THE SAME TYPE AS THOSE EXISTING SHALL BE USED.

ANY BACKFILLING UNDER OR AROUND POST SHALL BE DAMP SAND THOROUGHLY TAMPED IN PLACE.

WOOD POSTS & WOOD BLOCKS SHALL BE EITHER DENSE NO. 1 STRUCTURAL OR BETTER 9.7f (1400 f) OR NO. 1 1350 f SOUTHERN PINE.

CONTRACTOR SHALL HAVE THE OPTION OF USING WOOD BLOCKOUTS FOR W-BEAM GUARDRAIL OR PLASTIC BLOCKOUTS, AS LONG AS BLOCKOUT USED MEETS REQUIREMENTS FOR MANUAL FOR ASSESSING SAFETY HARDWARE (MASH) FOR W-BEAM GUARDRAIL.

DELINEATORS SHALL BE MOUNTED AT 37.5' SPACING ON THE FRONT FACE OF THE GUARDRAIL. SPACING MAY BE REDUCED IN CURVES, AS DIRECTED BY THE ENGINEER. COLOR SHALL BE IN ACCORDANCE WITH THE MANUAL ON UNIFORM TRAFFIC CONTROL DEVICES. PAYMENT FOR DELINEATORS SHALL BE CONSIDERED INCLUDED IN THE PRICE BID PER LIN. FT. FOR GUARDRAIL.

DATE	REVISION	FILMED
05-19-22	REVISED GENERAL NOTES. ADDED DELINEATOR LOCATION.	
11-07-19	RENUMBERED AND RENAMED	
11-16-17	REVISED GENERAL NOTES AND RAISED GUARDRAIL HEIGHT 3"	
07-14-10	RAISED HEIGHT OF GUARDRAIL 1"	
10-15-09	ADDED REFERENCE TO MASH	
04-10-03	REVISED GENERAL NOTES	
08-22-02	REVISED DIMENSION ON WOOD & PLASTIC BLOCKOUT CONNECTIONS & STEEL POST	
11-16-01	REVISED WOOD BLOCKOUT & DETAILS OF WOOD LINE POST CONNECTIONS	
03-30-00	REMOVED GUARDRAIL AT BRIDGE ENDS	
01-12-00	ADDED PLASTIC BLOCKOUT	
08-12-98	REV. BLOCKOUTS TO WOOD. DELETED CONC. POST & REV. GENERAL NOTE. DELETED DET. OF GUARDRAIL REPLACE. BEHIND CURB & DET. OF POST PLACE. IN SOLID ROCK. & ADDED DETAILS OF STEEL LINE POST CONN. REMOVED BACK-UP PLATE. REVISED HOLES IN STEEL POLES	
04-03-97	REMOVED "LAP IN DIRECTION OF TRAFFIC" NOTE & PLACED ARROWS ON WASHERS	
10-18-96	REVISED WOOD POST NOTE	
06-02-94	ADDED ALT. STEEL POST SIZE	
08-05-93	REVISED STEEL POST SIZE	8-5-93
10-01-92	REDRAWN & REVISED	10-1-92
08-15-91	REVISED WASHER NOTE	8-15-91
08-02-90	REV. GEN. NOTE & DEPTH OF ANC. POST IN ROCK	8-2-90
07-15-88	REVISED SECTION 3 & GENERAL NOTES	
03-04-88	REV. ANCHOR POST, ELEV. NOTES & POST IN ROCK	780-3-4-88
10-30-87	REVISED WOOD LINE POST DETAIL	546-10-30-87
10-09-87	REDRAWN & REVISED	802-10-9-87

ARKANSAS STATE HIGHWAY COMMISSION

GUARDRAIL DETAILS

STANDARD DRAWING GR-6

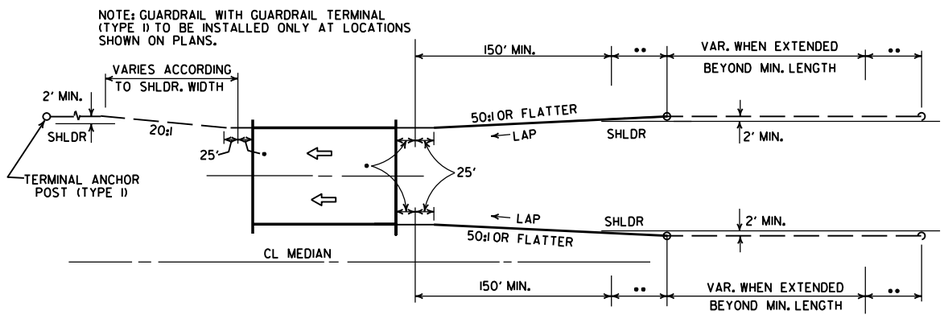

ONE-WAY TRAFFIC

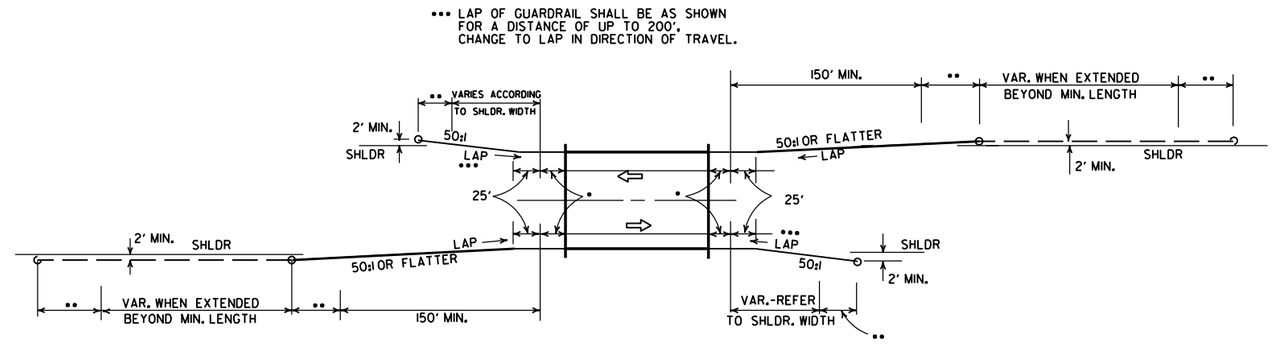

TWO-WAY TRAFFIC

METHODS OF INSTALLATION OF GUARDRAIL AT LESS THAN FULL SHOULDER WIDTH BRIDGES USING GUARDRAIL TERMINAL (TYPE 2)

••• LAP OF GUARDRAIL SHALL BE AS SHOWN FOR A DISTANCE OF UP TO 200'. CHANGE TO LAP IN DIRECTION OF TRAVEL.

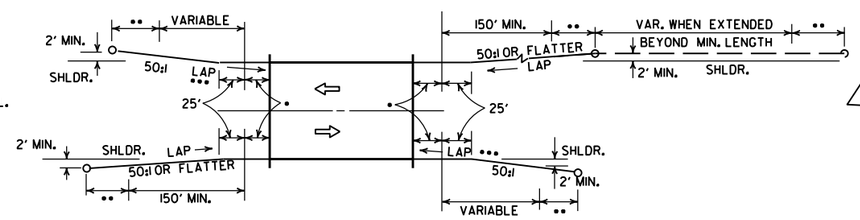

TWO-WAY TRAFFIC

NOTE: GUARDRAIL WITH GUARDRAIL TERMINAL (TYPE I) TO BE INSTALLED ONLY AT LOCATIONS SHOWN ON PLANS.

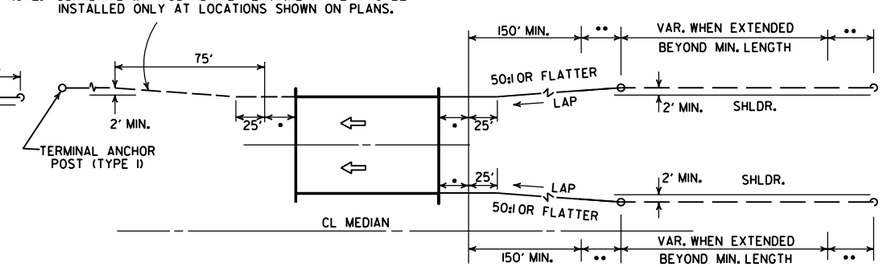

ONE-WAY TRAFFIC

METHOD OF INSTALLATION OF GUARDRAIL AT FULL SHOULDER WIDTH BRIDGES USING GUARDRAIL TERMINAL (TYPE 2)

••• LAP OF GUARDRAIL SHALL BE AS SHOWN FOR A DISTANCE OF UP TO 200'. CHANGE TO LAP IN DIRECTION OF TRAVEL.

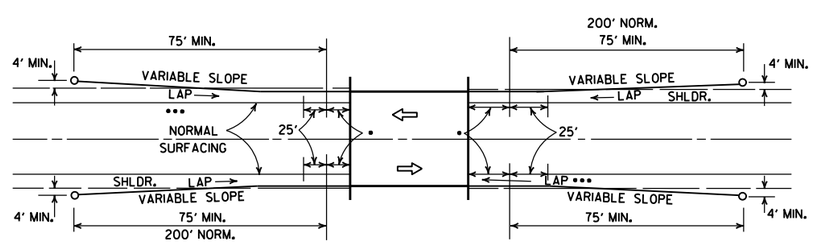

METHOD OF INSTALLATION OF GUARDRAIL USING GUARDRAIL TERMINAL (TYPE I) (FULL SHOULDER WIDTH OR LESS BRIDGES)

LEGEND

- • THRIE BEAM GUARDRAIL TERMINAL
- •• GUARDRAIL TERMINAL (TYPE 2)

DATE	REVISION	DATE FILM
11-07-19	RENUMBERED AND RENAMED	
4-17-08	REVISED LAYOUTS	
11-10-05	REMOVED GUARDRAIL NOTES AND DETAILS	
11-16-01	DELETED NOTE-METHOD OF INSTALLATION OF GUARDRAIL USING GUARDRAIL TERM. (TY. I)	
1-12-00	ADDED CONSTRUCTION NOTE	1-12-00
6-26-97	REVISED LAYOUT	
10-1-92	REDRAWN & REVISED	10-1-92
	ADDED NOTE	
10-9-87	REDRAWN & REVISED	

ARKANSAS STATE HIGHWAY COMMISSION

GUARDRAIL DETAILS

STANDARD DRAWING GR-8

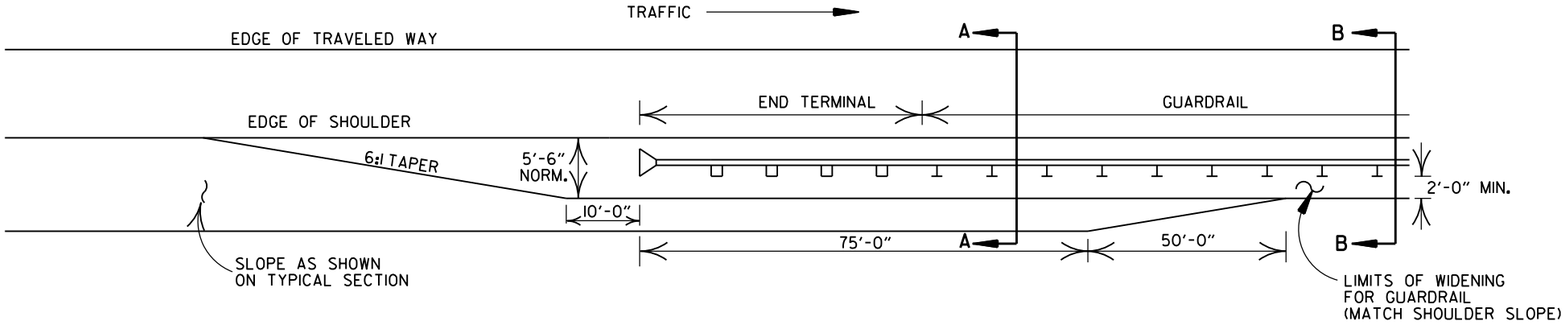

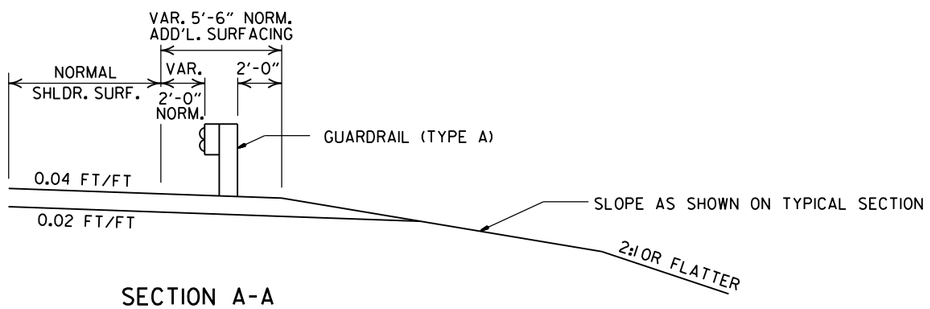

SECTION A-A

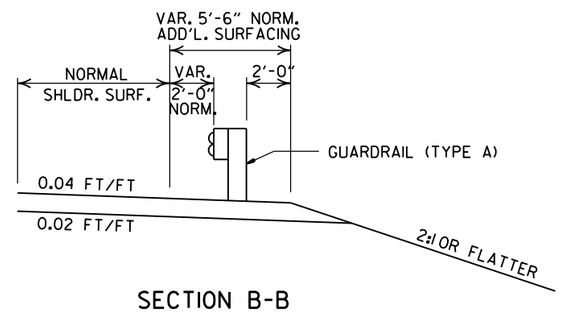

SECTION B-B

DETAILS OF WIDENING FOR GUARDRAIL

NOTE: NORMAL SECTION TO BE WIDENED APPROX. 5'-6" EACH SIDE TO SUPPORT GUARDRAIL.

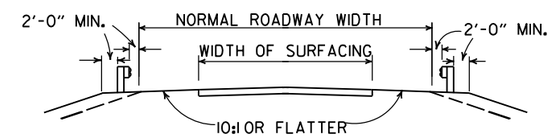

SECTION ON TANGENT

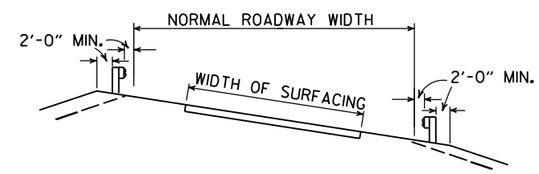

SECTION ON CURVE

DETAILS SHOWING POSITION OF GUARDRAIL ON HIGHWAY

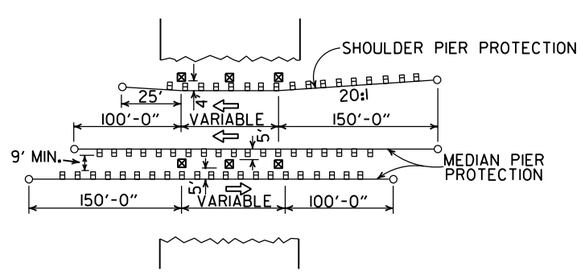

METHOD OF INSTALLATION OF GUARDRAIL AT FIXED OBSTACLE

DATE	REVISION	DATE FILM
11-07-19	RENUMBERED AND RENAMED	
4-17-08	MINOR REVISION	
11-10-05	DRAWN	

ARKANSAS STATE HIGHWAY COMMISSION

GUARDRAIL DETAILS

STANDARD DRAWING GR-9

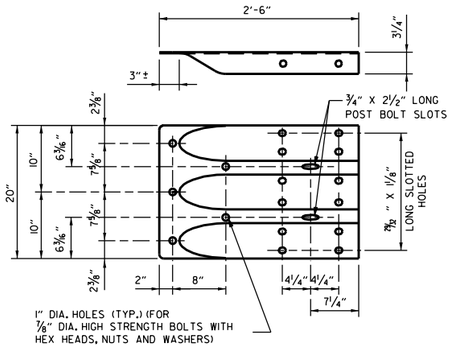

SPECIAL END SHOE

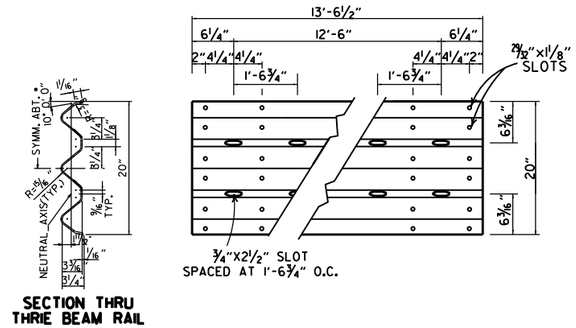

THRIE BEAM RAIL

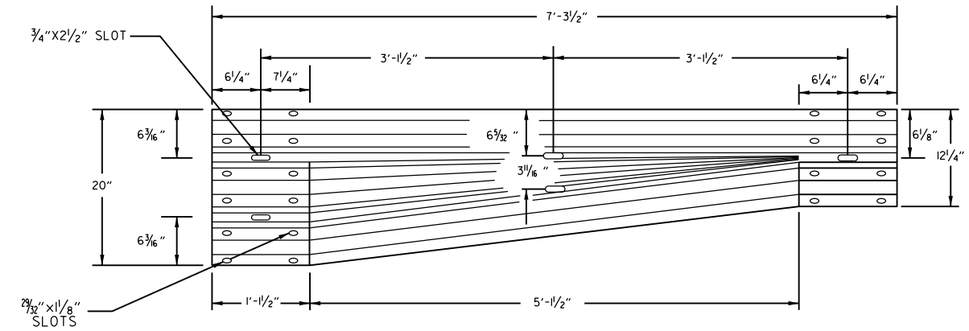

TRANSITION SECTION

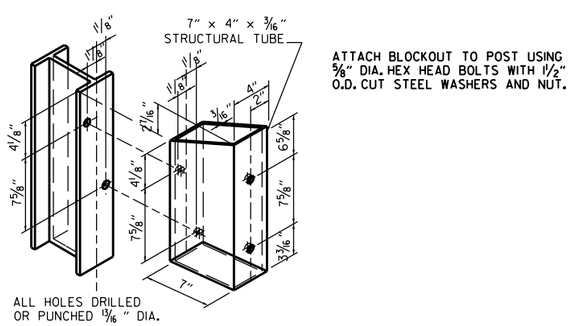

STRUCTURAL STEEL TUBING BLOCKOUT DETAIL

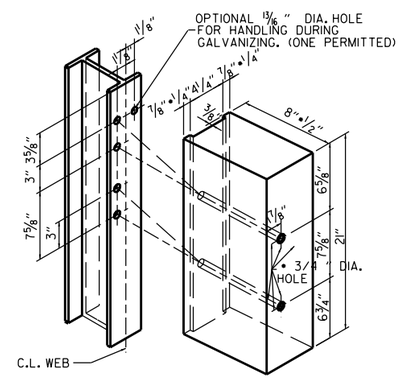

ALL HOLES 13/16" DIAMETER EXCEPT AS NOTED

HOLE PUNCHING DETAIL FOR STEEL POST & WOOD OR PLASTIC BLOCKOUTS

NOTE: BLOCKS SHALL BE THE SAME TYPE THROUGHOUT THE PROJECT LIMITS.

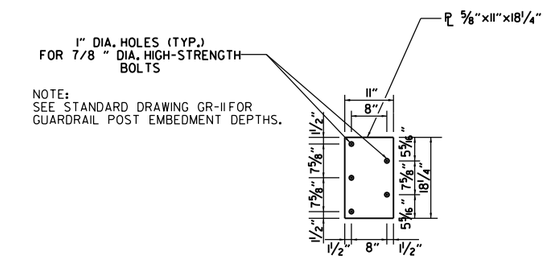

NOTE:
SEE STANDARD DRAWING GR-11 FOR GUARDRAIL POST EMBEDMENT DEPTHS.

CONNECTOR PLATE

CONNECTOR PLATE SHALL BE AASHTO M270, GR. 36 AND SHALL BE GALVANIZED AFTER FABRICATION. GALVANIZING SHALL CONFORM TO SUBSECTION 807.19 OF THE STANDARD SPECIFICATIONS. CONNECTOR PLATE TO BE BOLTED TO SPECIAL END SHOE USING 7/8" DIA. HIGH STRENGTH BOLTS, WITH THE HEADS PLACED ON THE TRAFFIC FACE. WASHERS SHALL BE USED UNDER THE HEAD AND NUT. BOLTS, NUTS AND WASHERS SHALL BE GALVANIZED AND SHALL CONFORM TO SUBSECTION 807.06.

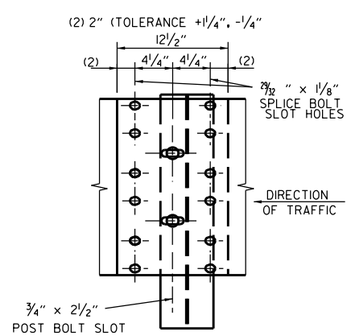

THRIE BEAM RAIL SPLICE AT POST

GENERAL NOTES:

THE THRIE BEAM RAIL, SPECIAL END SHOE, AND THE TRANSITION SECTION SHALL BE MADE OF STEEL AND SHALL BE 12 GAGE. ZINC COATING SHALL BE TYPE I.

RAIL POSTS SHALL BE SET PERPENDICULAR TO THE ROADWAY PROFILE GRADE AND VERTICALLY IN CROSS SECTION.

ALL BOLTS SHALL BE SUFFICIENT LENGTH TO EXTEND THROUGH THE FULL THICKNESS OF THE NUT AND NO MORE THAN 3*4" BEYOND IT.

ALL LAP SPLICES, INCLUDING SPECIAL END SHOES, SHALL BE MADE IN THE DIRECTION SHOWN ON STANDARD DRAWINGS GR-8 & GR-13.

REFER TO STD. DRWG. GR-11 FOR POST DETAILS.

USE THRIE BEAM GUARDRAIL COMPONENTS OF SAME MATERIAL FOR ENTIRE JOB.

THRIE BEAM POSTS SHALL BE SAME MATERIAL AS W-BEAM POSTS FOR ENTIRE JOB.

WOOD POSTS & WOOD BLOCKS SHALL BE EITHER DENSE NO. 1 STRUCTURAL OR BETTER 9.7f (1400 f) OR NO. 1 1350 f SOUTHERN PINE.

DATE	REVISION	FILMED
11-07-19	RENAMED AND REVISED REFERENCES	
11-16-17	REVISED TRANSITION SECTION, GUARD RAIL HEIGHT, AND GENERAL NOTES; MOVED THRIE BEAM GUARD RAIL CONNECTIONS AT BRIDGES ENDS TO STD. DRWG. GR-12	
07-14-10	RAISED HEIGHT OF W-BEAM 1"	
11-29-07	ADDED PLASTIC BLOCKOUTS	
11-10-05	ADDED NOTE FOR ATTACHING STEEL BLOCKOUT	
11-18-04	REVISED GENERAL NOTES	
10-9-03	REVISED GENERAL NOTES	
04-10-03	REVISED GENERAL NOTES	
08-22-02	REVISED NOTE (2)	
06-29-00	MOVED DIMENSION LINES	
05-18-00	ADDED NOTE	
03-30-00	DRAWN & ISSUED	

ARKANSAS STATE HIGHWAY COMMISSION

GUARDRAIL DETAILS

STANDARD DRAWING GR-10

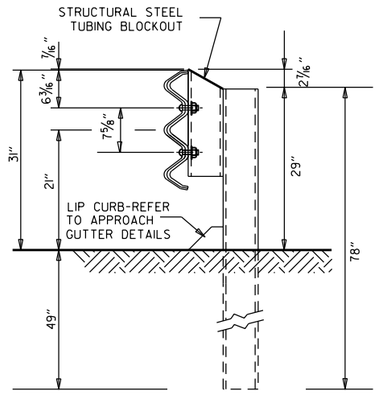

THRIE BEAM RAIL WITH STEEL TUBING BLOCKOUT
AND STEEL POST
POSTS 1-7

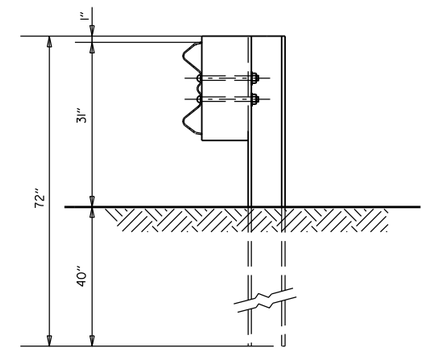

W-BEAM TO THRIE BEAM TRANSITION RAIL
WITH WOOD OR PLASTIC BLOCKOUT AND STEEL POST
POST 8

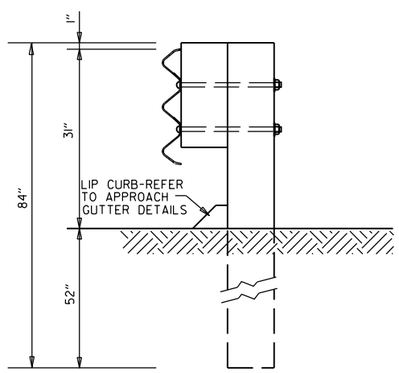

THRIE BEAM RAIL
WITH WOOD OR PLASTIC
BLOCKOUTS & WOOD POSTS
POSTS 1-6

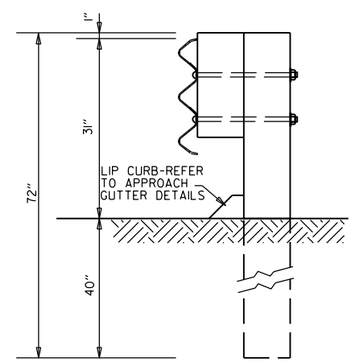

THRIE BEAM RAIL
WITH WOOD OR PLASTIC
BLOCKOUT & WOOD POST
POST 7

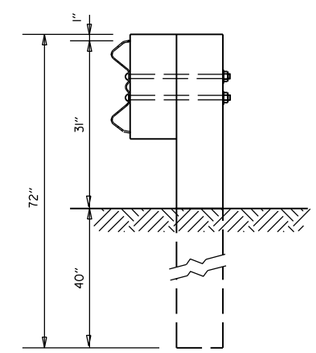

W-BEAM TO THRIE BEAM
TRANSITION RAIL WITH WOOD OR
PLASTIC BLOCKOUT & WOOD POST
POST 8

GENERAL NOTES:

RAIL POSTS SHALL BE SET PERPENDICULAR TO THE ROADWAY PROFILE GRADE AND VERTICALLY IN CROSS SECTION.

WOOD POSTS & WOOD BLOCKS SHALL BE EITHER DENSE NO. 1 STRUCTURAL OR BETTER 9.7f (1400 f) OR NO. 1 1350 f SOUTHERN PINE.

DATE	REVISION	FILMED
11-07-19	RENAMED	
11-16-17	REVISED GUARDRAIL HEIGHT, CHANGED STD. DWG. NUMBER FROM GR-10A TO GR-11	
07-14-10	REVISED POST 8 DIMENSIONS	
11-29-07	ADDED PLASTIC BLOCKOUTS	
08-22-02	REVISED LIP CURB NOTE	
03-30-00	DRAWN & ISSUED	

ARKANSAS STATE HIGHWAY COMMISSION

GUARDRAIL DETAILS

STANDARD DRAWING GR-11

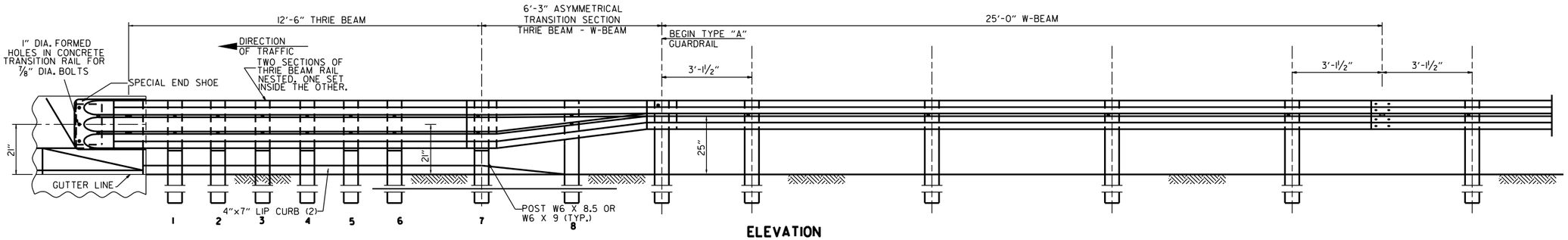

ELEVATION

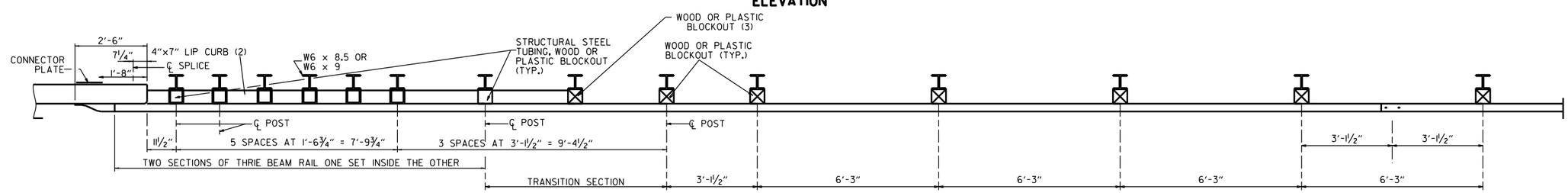

PLAN

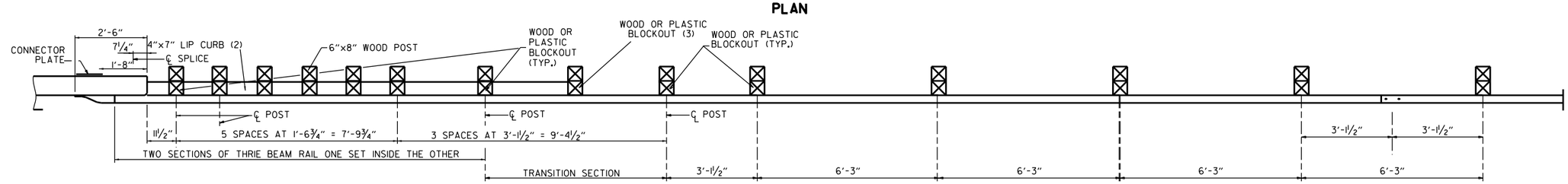

PLAN

(1) VERIFY BOLT SPACING FROM RAIL TRANSITION PRODUCER.
(2) REFER TO APPROACH GUTTER DETAILS.
(3) LENGTH OF BLOCKOUT ON POST 8 TO BE MODIFIED TO FIT RAIL WIDTH.

THRIE BEAM GUARDRAIL CONNECTION AT BRIDGE ENDS

GENERAL NOTES:

THE THRIE BEAM RAIL, SPECIAL END SHOE, AND THE TRANSITION SECTION SHALL BE MADE OF STEEL AND SHALL BE 12 GAGE. ZINC COATING SHALL BE TYPE I.

RAIL POSTS SHALL BE SET PERPENDICULAR TO THE ROADWAY PROFILE GRADE AND VERTICALLY IN CROSS SECTION.

ALL BOLTS SHALL BE SUFFICIENT LENGTH TO EXTEND THROUGH THE FULL THICKNESS OF THE NUT AND NO MORE THAN 3/4" BEYOND IT.

ALL LAP SPLICES, INCLUDING SPECIAL END SHOES, SHALL BE MADE IN THE DIRECTION SHOWN ON STANDARD DRAWINGS GR-8 & GR-13.

REFER TO STD. DRWG. GR-11 FOR POST DETAILS.

USE THRIE BEAM GUARDRAIL COMPONENTS OF SAME MATERIAL FOR ENTIRE JOB.

THRIE BEAM POSTS SHALL BE SAME MATERIAL AS W-BEAM POSTS FOR ENTIRE JOB.

POSTS SHALL NOT BE PLACED AT SPLICE LOCATIONS ALONG W-BEAM RAILS.

WOOD POSTS & WOOD BLOCKS SHALL BE EITHER DENSE NO. 1 STRUCTURAL OR BETTER 9.7f (1400 f) OR NO. 1 1350 f SOUTHERN PINE.

DATE	REVISION	FILMED
05-14-20	REVISED NOTES	
11-07-19	RENAMED & REVISED REFERENCES	
11-16-17	RE-DRAWN FROM STD. DWG. GR-10 & ISSUED	

ARKANSAS STATE HIGHWAY COMMISSION

GUARDRAIL DETAILS

STANDARD DRAWING GR-12

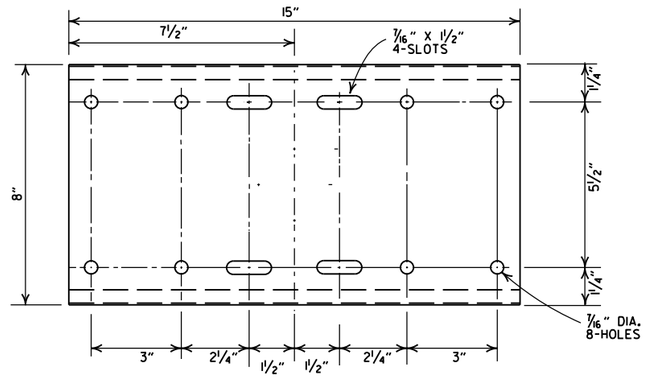

SHELF

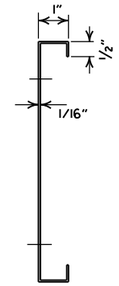

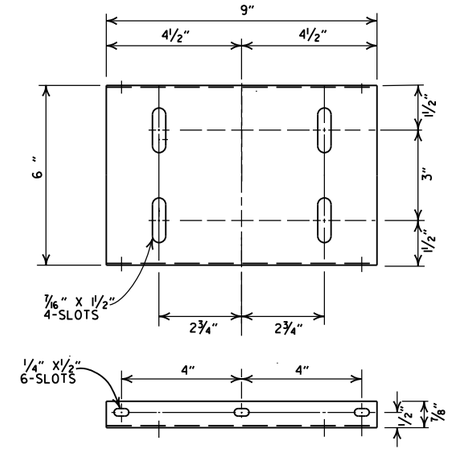

PLATFORM

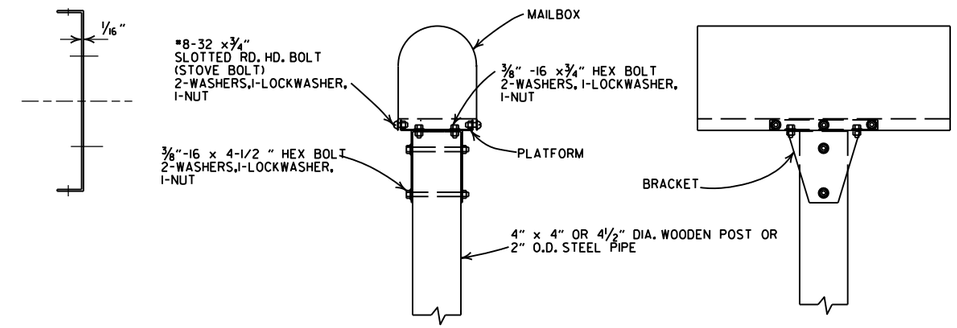

SINGLE INSTALLATION

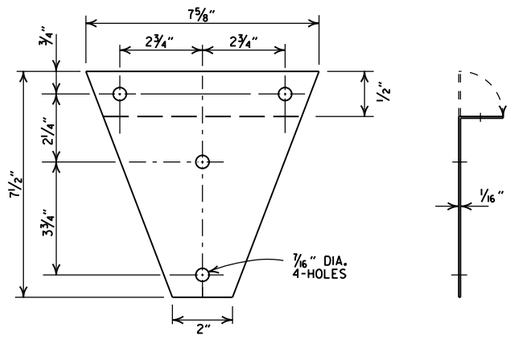

BRACKET

GENERAL NOTES

1. MAILBOX POSTS MAY BE WOOD OR METAL. WOOD POSTS SHALL BE PRESSURE TREATED FOR GROUND CONTACT IN ACCORDANCE WITH SECTION 637.02 OF THE STANDARD SPECIFICATIONS.
2. ANTI-TWIST PLATES SHALL BE USED ONLY ON METAL POSTS.
3. MAILBOX SHELF, BRACKET & PLATFORM SHALL BE GALVANIZED OR PAINTED STEEL, HOWEVER TREATED WOOD MAY BE USED WITH WOODEN POSTS. THE WOODEN SHELF, BRACKET & PLATFORM SHALL BE A MINIMUM OF ¾" THICK AND SHALL BE ASSEMBLED WITH BOLTS OF THE APPROPRIATE LENGTH WITH SIX 8 X ¾" FLATHEAD WOOD SCREWS USED TO ATTACH THE MAILBOX TO THE PLATFORM.
4. THE MAILBOX SHELF AND PLATFORM THAT IS SHOWN IS FOR STANDARD SIZE MAILBOXES. THE SHELF AND PLATFORM SIZE SHALL BE MODIFIED TO FIT MAILBOXES OF A DIFFERENT SIZE.
5. METAL PIPE FOR MAILBOX SUPPORT SHALL BE 2" OUTSIDE DIAMETER STEEL WITH A WALL THICKNESS OF 0.145" AND A WEIGHT OF 2.72 LBS PER FT. OUTSIDE DIAMETER AND WEIGHT SHALL HAVE A TOLERANCE OF +/- 5% ACCORDING TO AASHTO M 181.
6. MAILBOX SUPPORT SYSTEM DIFFERING FROM THOSE SHOWN MAY BE USED, PROVIDED THEY ARE ON THE ARDOT QUALIFIED PRODUCTS LIST FOR MAILBOX SUPPORTS.

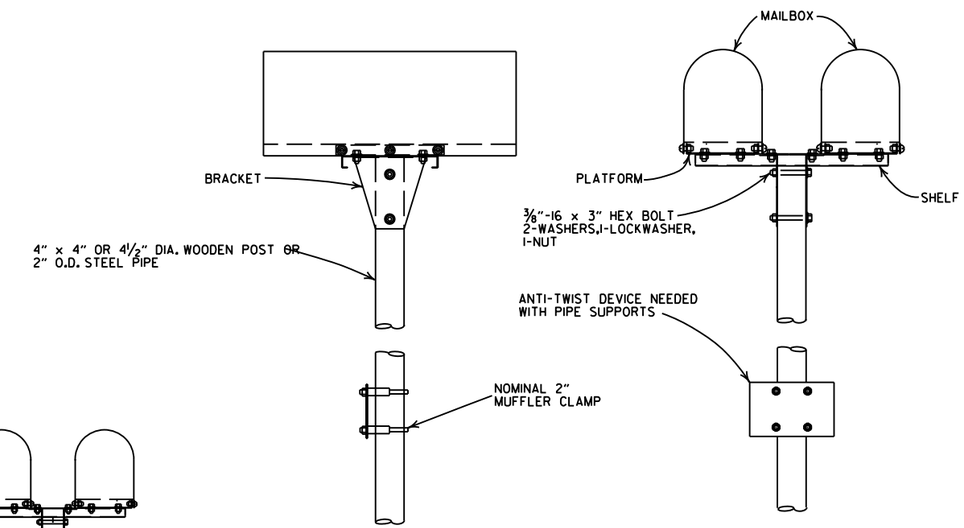

DOUBLE INSTALLATION

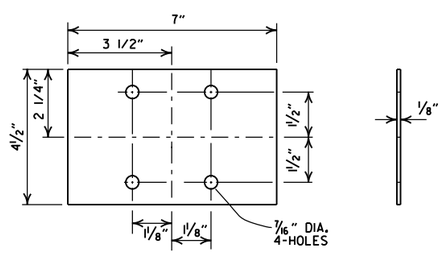

ANTI-TWIST PLATE

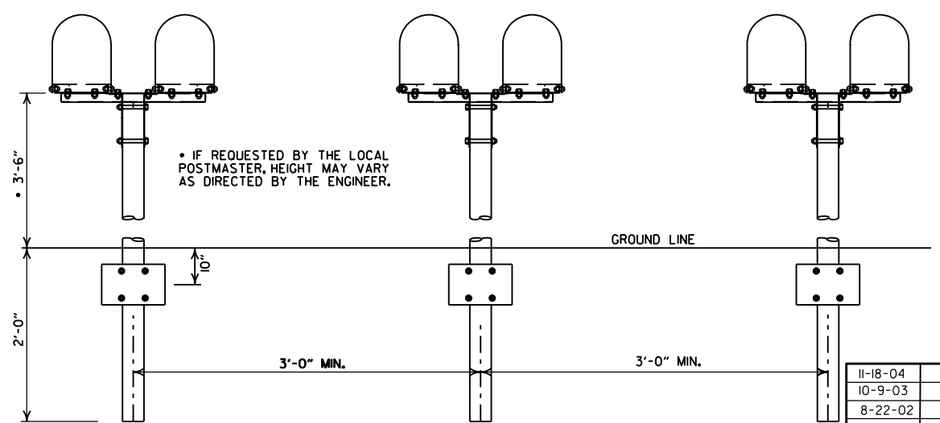

SPACING FOR MULTIPLE POST INSTALLATION

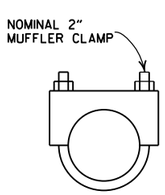

CLAMP

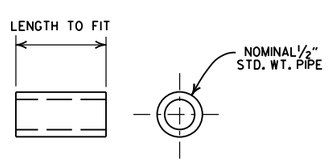

SPACER

DATE	FILMED	REVISION
11-18-04		REVISED NOTES
10-9-03		REVISED NOTE 6
8-22-02		REVISED NOTE 6
10-18-96		CORRECTED AASHTO
10-1-92		CORRECTED SPELLING
9-26-91		NEW PHONE NUMBER
8-15-91		ADDED NOTE
11-30-89		ADJUSTED HEIGHT & ADDED NOTE
2-16-89		DELETED SLOTS FROM SHELF & PLTF
11-17-88	10-1-92	ADJUSTED DIMENSIONS OF STEEL POSTS
7-15-88	20-7-15-88	ISSUED

ARKANSAS STATE HIGHWAY COMMISSION

MAILBOX DETAILS

STANDARD DRAWING MB-1

REINFORCED CONCRETE ARCH PIPE DIMENSIONS

EQUIV. DIA.	SPAN		RISE	
	AASHTO M 206	ARDOT NOMINAL	AASHTO M 206	ARDOT NOMINAL
INCHES	INCHES			
15	18	18	11	11
18	22	22	13½	14
21	26	26	15½	16
24	28½	29	18	18
30	36¼	36	22½	23
36	43⅜	44	26⅝	27
42	51⅛	51	31⅝	31
48	58½	59	36	36
54	65	65	40	40
60	73	73	45	45
72	88	88	54	54
84	102	102	62	62
90	115	115	72	72
96	122	122	77½	77
108	138	138	87⅛	87
120	154	154	96⅞	97
132	168¾	169	106½	107

THE MEASURED SPAN AND RISE SHALL NOT VARY MORE THAN ± 2 PERCENT FROM THE VALUES SPECIFIED BY AASHTO M206.

REINFORCED CONCRETE HORIZONTAL ELLIPTICAL PIPE DIMENSIONS

EQUIV. DIA.	AASHTO M 207	
	SPAN	RISE
INCHES	INCHES	
18	23	14
24	30	19
27	34	22
30	38	24
33	42	27
36	45	29
39	49	32
42	53	34
48	60	38
54	68	43
60	76	48
66	83	53
72	91	58
78	98	63
84	106	68

THE MEASURED SPAN AND RISE SHALL NOT VARY MORE THAN ± 2 PERCENT FROM THE VALUES SPECIFIED BY AASHTO M207.

CONSTRUCTION SEQUENCE

1. PLACE STRUCTURAL BEDDING MATERIAL TO GRADE. DO NOT COMPACT.
2. INSTALL PIPE TO GRADE.
3. COMPACT STRUCTURAL BEDDING OUTSIDE THE MIDDLE THIRD OF THE PIPE.
4. PLACE AND COMPACT THE HAUNCH AREA UP TO THE MIDDLE OF THE PIPE.
5. COMPLETE BACKFILL ACCORDING TO SUBSECTION 606.03.(f)(1).

NOTE: HAUNCH AND STRUCTURAL BEDDING MATERIAL WILL NOT BE PAID FOR SEPARATELY, BUT COMPENSATION WILL BE CONSIDERED TO BE INCLUDED IN THE PRICE BID PER LINEAR FOOT OF CONCRETE PIPE.

- LEGEND -

D_1 = NORMAL INSIDE DIAMETER OF PIPE
D_O = OUTSIDE DIAMETER OF PIPE
H = FILL COVER HEIGHT OVER PIPE (FEET)
MIN. = MINIMUM
= UNDISTURBED SOIL

INSTALLATION TYPE	MATERIAL REQUIREMENTS FOR HAUNCH AND STRUCTURAL BEDDING
TYPE 1	AGGREGATE BASE COURSE (CLASS 5 OR CLASS 7)
TYPE 2	SELECTED MATERIALS (CLASS SM-1, SM-2, OR SM-4) OR TYPE 1 INSTALLATION MATERIAL*
TYPE 3**	AASHTO CLASSIFICATION A-1 THRU A-6 SOIL OR TYPE 1 OR 2 INSTALLATION MATERIAL

* SM-3 WILL NOT BE ALLOWED.

** MATERIALS SHALL NOT INCLUDE ORGANIC MATERIALS OR STONES LARGER THAN 3 INCHES.

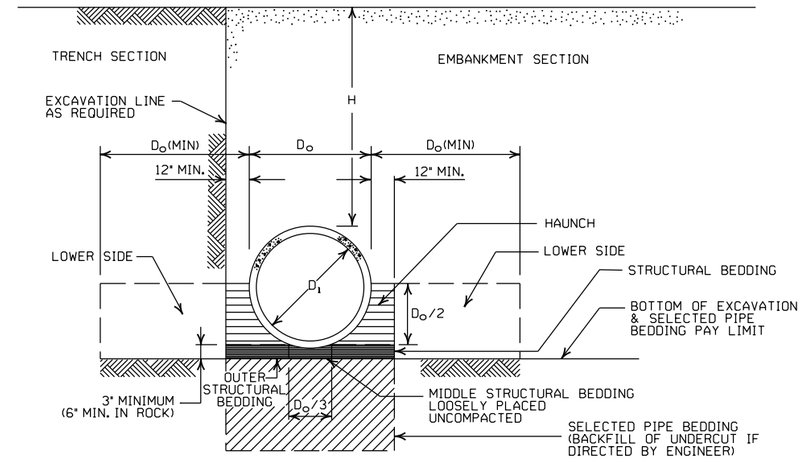

EMBANKMENT AND TRENCH INSTALLATIONS

1. MATERIAL IN THE HAUNCH AND OUTER STRUCTURAL BEDDING SHALL BE COMPACTED TO 95% OF THE MAXIMUM DENSITY ACCORDING TO THE TYPE OR CLASS OF MATERIAL USED.
2. FOR TRENCHES WITH WALLS OF NATURAL SOIL, THE DENSITY OF THE SOIL IN THE LOWER SIDE ZONE SHALL BE AS FIRM AS THE 95% DENSITY REQUIRED FOR THE HAUNCH. IF THE EXISTING SOIL DOES NOT MEET THIS CRITERIA, IT SHALL BE REMOVED AND RECOMPACTED TO 95% OF THE MAXIMUM DENSITY ACCORDING TO THE TYPE OF MATERIAL USED.
3. FOR EMBANKMENTS, THE MATERIAL IN THE LOWER SIDE ZONE SHALL BE COMPACTED TO 95% OF THE MAXIMUM DENSITY ACCORDING TO THE TYPE OR CLASS OF MATERIAL USED.

MINIMUM HEIGHT OF FILL "H" OVER CIRCULAR R.C. PIPE CULVERTS

	CLASS OF PIPE			
	CLASS III		CLASS IV	CLASS V
INSTALLATION TYPE	TYPE 1 OR 2	TYPE 3	ALL	ALL
PIPE ID (IN.)	FEET			
12-15	2	2.5	2	1
18-24	2.5	3	2	1
27-33	3	4	2	1
36-42	3.5	5	2	1
48	4.5	5.5	2	1
54-60	5	7	2	1
66-78	6	8	2	1
84-108	7.5	8	2	1

NOTE: FOR MINIMUM COVER VALUES, "H" SHALL INCLUDE A MINIMUM OF 12" OF PAVEMENT AND/OR BASE.

MAXIMUM HEIGHT OF FILL "H" OVER CIRCULAR R.C. PIPE CULVERTS

INSTALLATION TYPE	CLASS OF PIPE		
	CLASS III	CLASS IV	CLASS V
	FEET		
TYPE 1	21	32	50
TYPE 2	16	25	39
TYPE 3	12	20	30

NOTE: IF FILL HEIGHT EXCEEDS 50 FEET, A SPECIAL DESIGN CONCRETE PIPE WILL BE REQUIRED USING TYPE 1 INSTALLATION.

MINIMUM HEIGHT OF FILL "H" OVER R.C. ARCH & HORIZONTAL ELLIPTICAL PIPE CULVERTS

INSTALLATION TYPE	CLASS OF PIPE	
	CLASS III	CLASS IV
	FEET	
TYPE 2 OR TYPE 3	2.5	1.5

NOTE: TYPE 1 INSTALLATION WILL NOT BE ALLOWED FOR ARCH & HORIZONTAL ELLIPTICAL PIPE CULVERTS.

NOTE: FOR MINIMUM COVER VALUES, "H" SHALL INCLUDE A MINIMUM OF 12" OF PAVEMENT AND/OR BASE.

MAXIMUM HEIGHT OF FILL "H" OVER R.C. ARCH & HORIZONTAL ELLIPTICAL PIPE CULVERTS

INSTALLATION TYPE	CLASS OF PIPE	
	CLASS III	CLASS IV
	FEET	
TYPE 2	13	21
TYPE 3	10	16

NOTE: TYPE 1 INSTALLATION WILL NOT BE ALLOWED FOR ARCH & HORIZONTAL ELLIPTICAL PIPE CULVERTS.

GENERAL NOTES

1. CONCRETE PIPE CULVERT CONSTRUCTION SHALL CONFORM TO ARKANSAS DEPARTMENT OF TRANSPORTATION STANDARD SPECIFICATIONS FOR HIGHWAY CONSTRUCTION (CURRENT EDITION), WITH APPLICABLE SUPPLEMENTAL SPECIFICATIONS AND SPECIAL PROVISIONS. UNLESS OTHERWISE NOTED IN THE PLANS, SECTION AND SUBSECTION REFER TO THE STANDARD CONSTRUCTION SPECIFICATIONS.
2. CONCRETE PIPE CULVERT DESIGN SHALL CONFORM TO AASHTO LRFD BRIDGE DESIGN SPECIFICATIONS, FIFTH EDITION (2010) WITH 2010 INTERIMS.
3. ALL PIPE SHALL CONFORM TO SECTION 606. CIRCULAR R.C. PIPE CULVERTS SHALL CONFORM TO AASHTO M170. R.C. ARCH PIPE CULVERTS SHALL CONFORM TO AASHTO M206 AND HORIZONTAL ELLIPTICAL PIPE CULVERTS SHALL CONFORM TO AASHTO M207.
4. ALL PIPE SHALL BE PROTECTED DURING CONSTRUCTION BY A COVER SUFFICIENT TO PREVENT DAMAGE FROM PASSAGE OF EQUIPMENT.
5. THE MINIMUM TRENCH WIDTH SHALL BE THE OUTSIDE DIAMETER OF THE PIPE PLUS 24 INCHES. THE MAXIMUM ALLOWABLE TRENCH WIDTH SHALL BE THE MINIMUM WIDTH PRACTICABLE FOR WORKING CONDITIONS.
6. MULTIPLE PIPE CULVERTS SHALL BE INSTALLED WITH A MINIMUM CLEARANCE OF 24 INCHES BETWEEN STRINGS OF PIPE. REFER TO STD. DWG. FES-2 FOR MINIMUM CLEARANCE WHERE FLARED END SECTIONS ARE USED.
7. IMPERVIOUS MATERIAL SHOULD BE PLACED AS DIRECTED BY THE ENGINEER AT THE ENDS OF THE CULVERT TO PREVENT LOSS OF STRUCTURAL BEDDING WHEN PERVIOUS MATERIAL IS USED FOR STRUCTURAL BEDDING AND/OR BACKFILL.
8. NOT MORE THAN ONE LIFTING HOLE MAY BE PROVIDED IN CONCRETE PIPE TO FACILITATE HANDLING. HOLE MAY BE CAST IN PLACE, CUT INTO THE FRESH CONCRETE AFTER FORMS ARE REMOVED, OR DRILLED. THE HOLE SHALL NOT BE MORE THAN TWO INCHES IN DIAMETER OR TWO INCHES SQUARE. CUTTING OR DISPLACEMENT OF REINFORCEMENT WILL NOT BE PERMITTED. SPALLED AREAS AROUND THE HOLE SHALL BE REPAIRED IN A WORKMANLIKE MANNER. LIFTING HOLE SHALL BE FILLED WITH MORTAR, CONCRETE, OR OTHER METHOD AS APPROVED BY THE ENGINEER.
9. WHEN DIRECTED BY THE ENGINEER, UNSUITABLE MATERIAL THAT IS ENCOUNTERED AT THE BOTTOM OF THE EXCAVATED TRENCH (BELOW THE AREA IDENTIFIED AS "STRUCTURAL BEDDING" ABOVE) WILL BE EXCAVATED AND REPLACED WITH SELECTED PIPE BEDDING. THE QUANTITY OF MATERIAL REQUIRED TO BACKFILL THE UNDERCUT AREA UP TO THE SELECTED PIPE BEDDING PAY LIMIT DESIGNATED ABOVE WILL BE MEASURED AND PAID FOR AS "SELECTED PIPE BEDDING."
10. WHEN THE EXISTING MATERIAL EXCAVATED FOR THE PIPE TRENCH IS DETERMINED BY THE ENGINEER TO BE UNSUITABLE FOR BACKFILLING THE PIPE (ABOVE THE AREA IDENTIFIED ABOVE AS THE HAUNCH), BORROW MATERIAL OR MATERIAL FROM THE ROADWAY EXCAVATION WILL BE USED TO BACKFILL THE PIPE. IF SUITABLE MATERIAL IS NOT AVAILABLE, THE ENGINEER MAY AUTHORIZE THE USE OF "SELECTED PIPE BACKFILL."

DATE	REVISION	DATE FILMED
2-27-14	REVISED GENERAL NOTE 1.	
12-15-11	REVISED FOR LRFD DESIGN SPECIFICATIONS	
5-18-00	REVISED TYPE 3 BEDDING & ADDED NOTE	
3-30-00	REVISED INSTALLATIONS	
11-06-97	ISSUED	

ARKANSAS STATE HIGHWAY COMMISSION

CONCRETE PIPE CULVERT FILL HEIGHTS & BEDDING

STANDARD DRAWING PCC-1

CORRUGATED STEEL PIPE (ROUND)

PIPE DIAMETER (INCHES)	① MINUMUM COVER TOP OF PIPE TO TOP OF GROUND "H" (FEET)	MAX. FILL HEIGHT "H" ABOVE TOP OF PIPE (FEET)				
		METAL THICKNESS (INCHES)				
		0.064	0.079	0.109	0.138	0.168
2⅔ INCH BY ½ INCH CORRUGATION RIVETED, WELDED, OR HELICAL LOCK-SEAM						
12	1	84	91			
15	1	67	73			
18	1	56	61			
24	1	42	46	59		
30	2	34	36	47		
36	2		30	39	41	
42	2		43	67	70	73
48	2		37	58	61	64
② 3 INCH BY 1 INCH OR 5 INCH BY 1 INCH CORRUGATION RIVETED, WELDED, BOLTED, OR HELICAL LOCK-SEAM						
36	1	48	60	88	111	118
42	1	41	51	72	90	102
48	1	36	45	64	77	85
54	2	32	40	59	71	79
60	2	29	36	53	64	71
66	2	26	33	47	58	64
72	2	24	30	44	53	59
78	2		28	41	49	54
84	2		26	38	45	51
90	2		24	35	43	45
96	2		22	33	40	44
102	2			31	38	42
108	2			30	35	39
114	2			28	34	37
120	2			27	32	35

CORRUGATED ALUMINUM PIPE (ROUND)

PIPE DIAMETER (INCHES)	① MINUMUM COVER TOP OF PIPE TO TOP OF GROUND "H" (FEET)	MAX. FILL HEIGHT "H" ABOVE TOP OF PIPE (FEET)				
		METAL THICKNESS IN INCHES				
		0.060	0.075	0.105	0.135	0.164
		2 ⅔ INCH BY ½ INCH CORRUGATION RIVETED OR HELICAL LOCK-SEAM				
12	1	45	45			
18	2	30	30	52		
24	2	22	22	39	41	
30	2		18	31	32	34
36	2.5		15	26	27	28
42	2			43	43	44
48	2			40	41	43
54	2			35	37	38
60	2				33	34
66	2					31
72	2					29

CORRUGATED METAL PIPE ARCHES

EQUIV. DIA. (INCHES)	PIPE DIMENSION SPAN X RISE (INCHES)	MINUMUM CORNER RADIUS (INCHES)	STEEL				ALUMINUM		
			MIN. THICKNESS REQUIRED INCHES	① MIN. HEIGHT OF FILL, "H" (FT.)		MAX. HEIGHT OF FILL, "H" (FT.)	MIN. THICKNESS REQUIRED INCHES	① MIN. HEIGHT OF FILL, "H" (FT.)	MAX. HEIGHT OF FILL, "H" (FT.)
				INSTALLATION		INSTALLATION		INSTALLATION	INSTALLATION
				TYPE 1		TYPE 1		TYPE 1	TYPE 1
			2 ⅔ INCH BY ½ INCH CORRUGATION RIVETED, WELDED, OR HELICAL LOCK-SEAM				2 ⅔ INCH BY ½ INCH CORRUGATION RIVETED OR HELICAL LOCK-SEAM		
15	17x13	3	0.064	2		15	0.060	2	15
18	21x15	3	0.064	2		15	0.060	2	15
21	24x18	3	0.064	2.25		15	0.060	2.25	15
24	28x20	3	0.064	2.5		15	0.075	2.5	15
30	35x24	3	0.079	3		12	0.075	3	12
36	42x29	3½	0.079	3		12	0.105	3	12
42	49x33	4	0.079	3		12	0.105	3	12
48	57x38	5	0.109	3		13	0.135	3	13
54	64x43	6	0.109	3		14	0.135	3	14
60	71x47	7	0.138	3		15	0.164	3	15
66	77x52	8	0.168	3		15			
72	83x57	9	0.168	3		15			
			② 3 INCH BY 1 INCH OR 5 INCH BY 1 INCH CORRUGATION RIVETED, WELDED, OR HELICAL LOCK-SEAM						
				INSTALLATION		INSTALLATION			
				TYPE 2	TYPE 1	TYPE 2 TYPE 1			
36	40x31	5	0.079	3	2	12 15			
42	46x36	6	0.079	3	2	13 15			
48	53x41	7	0.079	3	2	13 15			
54	60x46	8	0.079	3	2	13 15			
60	66x51	9	0.079	3	2	13 15			
66	73x55	12	0.079	3	2	15 15			
72	81x59	14	0.079	3	2	15 15			
78	87x63	14	0.079	3	2	15 15			
84	95x67	16	0.109	3	2	15 15			
90	103x71	16	0.109	3	2	15 15			
96	112x75	18	0.109	3	2	15 15			
102	117x79	18	0.109	3	2	15 15			
108	128x83	18	0.138	3	2	15 15			

CONSTRUCTION SEQUENCE

1. PLACE STRUCTURAL BEDDING MATERIAL TO GRADE. DO NOT COMPACT.
2. INSTALL PIPE TO GRADE.
3. COMPACT STRUCTURAL BEDDING OUTSIDE THE MIDDLE THIRD OF THE PIPE.
4. COMPLETE STRUCTURAL BACKFILL OPERATION BY WORKING FROM SIDE TO SIDE OF THE PIPE. THE SIDE TO SIDE STRUCTURAL BACKFILL DIFFERENTIAL SHALL NOT EXCEED 24 INCHES OR 1/3 THE SIZE OF THE PIPE, WHICHEVER IS LESS.

NOTE: STRUCTURAL BACKFILL AND STRUCTURAL BEDDING MATERIAL WILL NOT BE PAID FOR SEPARATELY, BUT COMPENSATION WILL BE CONSIDERED TO BE INCLUDED IN THE PRICE BID PER LINEAR FOOT OF METAL PIPE.

INSTALLATION TYPE	MATERIAL REQUIREMENTS FOR STRUCTURAL BACKFILL AND STRUCTURAL BEDDING
TYPE 1	AGGREGATE BASE COURSE (CLASS 4, 5, 6, OR 7)
TYPE 2	SELECTED MATERIALS (CLASS SM-1, SM-2, OR SM-4) OR TYPE 1 INSTALLATION MATERIAL ③

③ SM-3 WILL NOT BE ALLOWED.

EQUIVALENT METAL THICKNESSES AND GAUGES

METAL THICKNESS IN INCHES			GAUGE NUMBER
STEEL			
ZINC COATED	UNCOATED	ALUMINUM	
0.064	0.0598	0.060	16
0.079	0.0747	0.075	14
0.109	0.1046	0.105	12
0.138	0.1345	0.135	10
0.168	0.1644	0.164	8

- LEGEND -

D_o = OUTSIDE DIAMETER OF PIPE
MAX. = MAXIMUM
MIN. = MINIMUM
= STRUCTURAL BACKFILL MATERIAL
= UNDISTURBED SOIL
EQUIV. DIA. = EQUIVALENT DIAMETER
H = FILL COVER HEIGHT OVER PIPE (FEET)

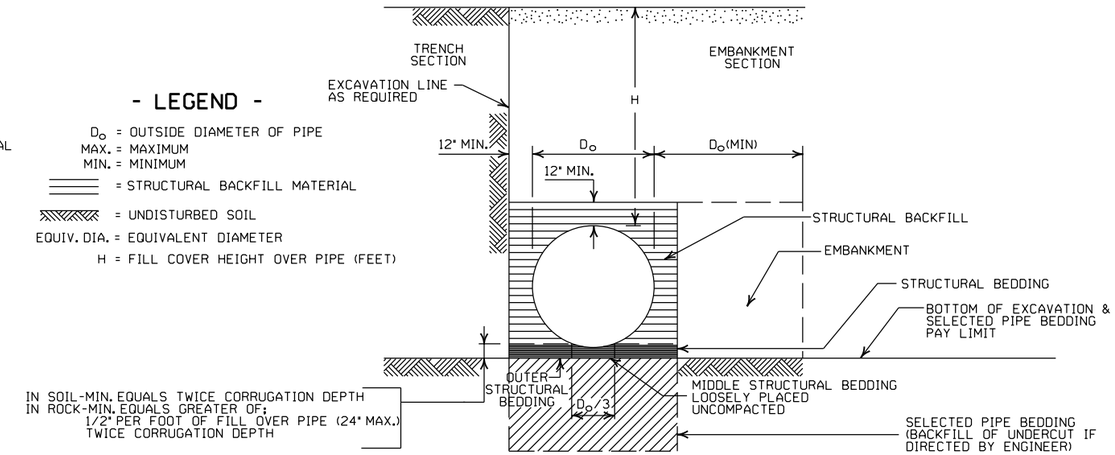

EMBANKMENT AND TRENCH INSTALLATIONS

1. STRUCTURAL BACKFILL, EMBANKMENT, AND OUTER STRUCTURAL BEDDING MATERIAL SHALL BE COMPACTED TO 95% OF THE MAXIMUM DENSITY ACCORDING TO THE TYPE OR CLASS OF MATERIAL USED.
2. INSTALLATION TYPE 1 OR 2 MAY BE USED FOR CORRUGATED STEEL OR ALUMINUM PIPE (ROUND).
3. INSTALALTION TYPE 1 SHALL BE USED FOR CORRUGATED STEEL OR ALUMINUM PIPE ARCHES WITH 2⅔" X ½" CORRUGATION.
4. INSTALLATION TYPE 1 OR 2 MAY BE USED FOR CORRUGATED STEEL OR ALUMINUM PIPE ARCHES WITH 3" X 1" OR 5" X 1" CORRUGATION.

GENERAL NOTES

1. METAL PIPE CULVERT CONSTRUCTION SHALL CONFORM TO ARKANSAS DEPARTMENT OF TRANSPORTATION STANDARD SPECIFICATIONS FOR HIGHWAY CONSTRUCTION (CURRENT EDITION), WITH APPLICABLE SUPPLEMENTAL SPECIFICATIONS AND SPECIAL PROVISIONS. UNLESS OTHERWISE NOTED IN THE PLANS, SECTION AND SUBSECTION REFER TO THE STANDARD CONSTRUCTION SPECIFICATIONS.
2. METAL PIPE CULVERT DESIGN SHALL CONFORM TO AASHTO LRFD BRIDGE DESIGN SPECIFICATIONS, FIFTH EDITION (2010) WITH 2010 INTERIMS.
3. METAL PIPE CULVERT MATERIALS AND INSTALLATIONS SHALL CONFORM TO SECTION 606 AND JOB SPECIAL PROVISION "METAL PIPE".
4. ALL PIPE SHALL BE PROTECTED DURING CONSTRUCTION BY A COVER SUFFICIENT TO PREVENT DAMAGE FROM PASSAGE OF EQUIPMENT.
5. THE MINIMUM TRENCH WIDTH SHALL BE THE OUTSIDE DIAMETER OF THE PIPE PLUS 24 INCHES. THE MAXIMUM ALLOWABLE TRENCH WIDTH SHALL BE THE MINIMUM WIDTH PRACTICABLE FOR WORKING CONDITIONS.
6. MULTIPLE PIPE CULVERTS SHALL BE INSTALLED WITH A MINIMUM CLEARANCE OF 24 INCHES BETWEEN STRINGS OF PIPE. REFER TO STD. DWG. FES-2 FOR MINIMUM CLEARANCE WHERE FLARED END SECTIONS ARE USED.
7. IMPERVIOUS MATERIAL SHOULD BE PLACED AS DIRECTED BY THE ENGINEER AT THE ENDS OF THE CULVERT TO PREVENT LOSS OF STRUCTURAL BEDDING WHEN PERVIOUS MATERIAL IS USED FOR STRUCTURAL BEDDING AND/OR BACKFILL.
8. WHEN DIRECTED BY THE ENGINEER, UNSUITABLE MATERIAL THAT IS ENCOUNTERED AT THE BOTTOM OF THE EXCAVATED TRENCH (BELOW THE AREA IDENTIFIED AS "STRUCTURAL BEDDING" ABOVE) WILL BE EXCAVATED AND REPLACED WITH SELECTED PIPE BEDDING. THE QUANTITY OF MATERIAL REQUIRED TO BACKFILL THE UNDERCUT AREA UP TO THE SELECTED PIPE BEDDING PAY LIMIT DESIGNATED ABOVE WILL BE MEASURED AND PAID FOR AS "SELECTED PIPE BEDDING."
9. WHEN THE EXISTING MATERIAL EXCAVATED FOR THE PIPE TRENCH IS DETERMINED BY THE ENGINEER TO BE UNSUITABLE FOR BACKFILLING THE PIPE (ABOVE THE AREA IDENTIFIED AS STRUCTURAL BACKFILL), BORROW MATERIAL OR MATERIAL FROM THE ROADWAY EXCAVATION WILL BE USED TO BACKFILL THE PIPE. IF SUITABLE MATERIAL IS NOT AVAILABLE, THE ENGINEER MAY AUTHORIZE THE USE OF "SELECTED PIPE BACKFILL."

① FOR MINIMUM COVER VALUES, "H" SHALL INCLUDE A MINIMUM 12" OF PAVEMENT AND/OR BASE.

② WHERE THE STANDARD 2 2/3"× ½" CORRUGATION AND GAUGE IS SPECIFIED FOR A GIVEN DIAMETER, A PIPE OF THE SAME DIAMETER WITH A 3" × 1" OR 5" × 1" CORRUGATION MAY BE SUBSTITUTED, PROVIDING IT IS GAUGED FOR A FILL HEIGHT CONDITION EQUAL TO OR GREATER THAN THE MAXIMUM FILL HEIGHT CONDITION FOR THE SPECIFIED GAUGE AND CORRUGATION.

DATE	REVISION	DATE FILMED
2-27-14	REVISED GENERAL NOTE 1.	
12-15-11	REVISED FOR LRFD DESIGN SPECS	
3-30-00	REVISED INSTALLATIONS	
11-06-97	ISSUED	

ARKANSAS STATE HIGHWAY COMMISSION

METAL PIPE CULVERT FILL HEIGHTS & BEDDING

STANDARD DRAWING PCM-1

INSTALLATION TYPE	•• MATERIAL REQUIREMENTS FOR STRUCTURAL BACKFILL AND STRUCTURAL BEDDING
TYPE 2	•SELECTED MATERIALS (CLASS SM-1, SM-2 OR SM-4)

• AGGREGATE BASE COURSE (CLASS 4, 5, 6, OR 7) MAY BE USED IN LIEU OF SELECTED MATERIAL.

SM3 WILL NOT BE ALLOWED.

•• STRUCTURAL BEDDING MATERIAL SHALL HAVE A MAXIMUM PARTICLE SIZE OF 1 INCH. STRUCTURAL BACKFILL MATERIAL SHALL BE FREE OF ORGANIC MATERIAL, STONES LARGER THAN 1.50 INCH IN GREATEST DIMENSION, OR FROZEN LUMPS.

STRUCTURAL BACKFILL AND STRUCTURAL BEDDING MATERIAL WILL NOT BE PAID FOR SEPARATELY, BUT COMPENSATION WILL BE CONSIDERED TO BE INCLUDED IN THE PRICE BID PER LINEAR FOOT OF HDPE PIPE.

MINIMUM TRENCH WIDTH BASED ON FILL HEIGHT "H"

PIPE DIAMETER	TRENCH WIDTH (FEET) "H" < 10'-0"	TRENCH WIDTH (FEET) "H" >OR= 10'-0"
18"	4'-6"	4'-6"
24"	5'-0"	6'-0"
30"	5'-6"	7'-6"
36"	6'-0"	9'-0"
42"	7'-0"	10'-6"
48"	8'-0"	12'-0"

①NOTE:
18" MIN. (18" - 30" DIAMETERS)
24" MIN. (36" - 48" DIAMETERS)

MINIMUM COVER VALUES, "H" SHALL INCLUDE A MINIMUM 12" OF PAVEMENT AND/OR BASE.

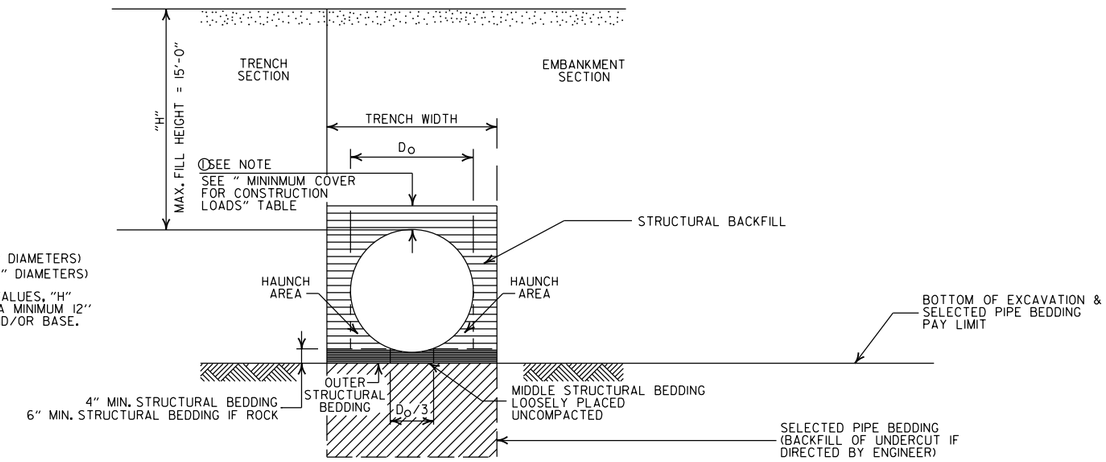

TYPE 2 EMBANKMENT AND TRENCH INSTALLATIONS

1. STRUCTURAL BACKFILL, EMBANKMENT, AND OUTER STRUCTURAL BEDDING MATERIAL SHALL BE COMPACTED TO 95% OF THE MAXIMUM DENSITY ACCORDING TO THE TYPE OR CLASS OF MATERIAL USED.

MULTIPLE INSTALLATION OF HIGH DENSITY POLYETHYLENE PIPES

PIPE DIAMETER	CLEAR DISTANCE BETWEEN PIPES
18"	1'-6"
24"	2'-0"
30"	2'-6"
36"	3'-0"
42"	3'-6"
48"	4'-0"

MINIMUM COVER FOR CONSTRUCTION LOADS

PIPE DIAMETER	② MIN. COVER (FEET) FOR INDICATED CONSTRUCTION LOADS 18.0-50.0 (KIPS)	50.0-75.0 (KIPS)	75.0-110.0 (KIPS)	110.0-175.0 (KIPS)
36" OR LESS	2'-0"	2'-6"	3'-0"	3'-0"
42" OR GREATER	3'-0"	3'-0"	3'-6"	4'-0"

②MINIMUM COVER SHALL BE MEASURED FROM TOP OF PIPE TO TOP OF THE MAINTAINED CONSTRUCTION ROADWAY SURFACE. THE SURFACE SHALL BE MAINTAINED.

CONSTRUCTION SEQUENCE

1. PLACE STRUCTURAL BEDDING MATERIAL TO GRADE. DO NOT COMPACT.
2. INSTALL PIPE TO GRADE.
3. COMPACT STRUCTURAL BEDDING OUTSIDE THE MIDDLE THIRD OF THE PIPE.
4. THE STRUCTURAL BACKFILL SHALL BE PLACED AND COMPACTED IN LAYERS NOT EXCEEDING 8". THE LAYERS SHALL BE BROUGHT UP EVENLY AND SIMULTANEOUSLY TO THE ELEVATION OF THE MINIMUM COVER.
5. PIPE INSTALLATION MAY REQUIRE THE USE OF RESTRAINTS, WEIGHTING OR OTHER APPROVED METHODS IN ORDER TO HELP MAINTAIN GRADE AND ALIGNMENT.

GENERAL NOTES

1. PIPE SHALL CONFORM TO AASHTO M294, TYPE S. INSTALLATION SHALL CONFORM TO JOB SPECIAL PROVISION "PLASTIC PIPE" AND SECTION 606 OF THE STANDARD SPECIFICIATIONS FOR HIGHWAY CONSTRUCTION (CURRENT EDITION).
2. PLASTIC PIPE CULVERT DESIGN SHALL CONFORM TO AASHTO LRFD BRIDGE DESIGN SPECIFICATIONS, FIFTH EDITION (2010) WITH 2010 INTERIMS.
3. THE MAXIMUM ALLOWABLE TRENCH WIDTH SHALL BE THE MINIMUM WIDTH PLUS A SUFFICIENT WIDTH TO ENSURE WORKING ROOM TO PROPERLY AND SAFELY PLACE AND COMPACT HAUNCHING AND OTHER BACKFILL MATERIAL.
4. IMPERVIOUS MATERIAL SHOULD BE PLACED AS DIRECTED BY THE ENGINEER AT THE ENDS OF THE CULVERT TO PREVENT LOSS OF STRUCTURAL BEDDING WHEN PERVIOUS MATERIAL IS USED FOR STRUCTURAL BEDDING AND/OR BACKFILL.
5. WHEN DIRECTED BY THE ENGINEER, UNSUITABLE MATERIAL THAT IS ENCOUNTERED AT THE BOTTOM OF THE EXCAVATED TRENCH (BELOW THE AREA IDENTIFIED AS "STRUCTURAL BEDDING" ABOVE) WILL BE EXCAVATED AND REPLACED WITH SELECTED PIPE BEDDING. THE QUANTITY OF MATERIAL REQUIRED TO BACKFILL THE UNDERCUT AREA UP TO THE SELECTED PIPE BEDDING PAY LIMIT DESIGNATED ABOVE WILL BE MEASURED AND PAID FOR AS "SELECTED PIPE BEDDING."
6. WHEN THE EXISTING MATERIAL EXCAVATED FOR THE PIPE TRENCH IS DETERMINED BY THE ENGINEER TO BE UNSUITABLE FOR BACKFILLING THE PIPE (ABOVE THE AREA IDENTIFIED ABOVE AS STRUCTURAL BACKFILL), BORROW MATERIAL OR MATERIAL FROM THE ROADWAY EXCAVATION WILL BE USED TO BACKFILL THE PIPE. IF SUITABLE MATERIAL IS NOT AVAILABLE, THE ENGINEER MAY AUTHORIZE THE USE OF "SELECTED PIPE BACKFILL."
7. FOR PIPE TYPES THAT ARE NOT SMOOTH ON THE OUTSIDE (CORRUGATED OR PROFILE WALLS), BACKFILL GRADATIONS SHOULD BE SELECTED THAT WILL PERMIT THE FILLING OF THE CORRUGATION OR PROFILE VALLEY.
8. HIGH DENSITY POLYETHYLENE PIPES OF DIAMETERS OTHER THAN SHOWN WILL NOT BE ALLOWED.
9. JOINTS FOR HDPE PIPE SHALL MEET THE REQUIREMENTS FOR SOIL TIGHTNESS AS SPECIFIED IN AASHTO SECTION 26.4.2.4 AND 30.4.2 "AASHTO LRFD BRIDGE CONSTRUCTION SPECIFICATIONS." JOINTS SHALL BE INSTALLED PER MANUFACTURER'S RECOMMENDATIONS.

- LEGEND -

H = FILL HEIGHT (FT.)
Ø = OUTSIDE DIAMETER OF PIPE
MAX. = MAXIMUM
MIN. = MINIMUM

= STRUCTURAL BACKFILL MATERIAL

= UNDISTURBED SOIL

DATE	REVISION	DATE FILMED
2-27-14	REVISED GENERAL NOTE 1.	
12-15-11	REVISED GENERAL NOTES & MINIMUM COVER NOTE	
11-17-10	ISSUED	

ARKANSAS STATE HIGHWAY COMMISSION

PLASTIC PIPE CULVERT (HIGH DENSITY POLYETHYLENE)

STANDARD DRAWING PCP-1

INSTALLATION TYPE	•• MATERIAL REQUIREMENTS FOR STRUCTURAL BACKFILL AND STRUCTURAL BEDDING
TYPE 2	•SELECTED MATERIALS (CLASS SM-1, SM-2, OR SM-4)

• AGGREGATE BASE COURSE (CLASS 4, 5, 6, OR 7) MAY BE USED IN LIEU OF SELECTED MATERIAL.

SM3 WILL NOT BE ALLOWED.

•• STRUCTURAL BEDDING MATERIAL SHALL HAVE A MAXIMUM PARTICLE SIZE OF 1INCH. STRUCTURAL BACKFILL MATERIAL SHALL BE FREE OF ORGANIC MATERIAL, STONES LARGER THAN 1.50 INCH IN GREATEST DIMENSION, OR FROZEN LUMPS.

STRUCTURAL BACKFILL AND STRUCTURAL BEDDING MATERIAL WILL NOT BE PAID FOR SEPARATELY, BUT COMPENSATION WILL BE CONSIDERED TO BE INCLUDED IN THE PRICE BID PER LINEAR FOOT OF PVC PIPE.

MINIMUM TRENCH WIDTH BASED ON FILL HEIGHT "H"

PIPE DIAMETER	TRENCH WIDTH (FEET) "H" < 10'-0"	TRENCH WIDTH (FEET) "H" >OR= 10'-0"
18"	4'-6"	4'-6"
24"	5'-0"	6'-0"
30"	5'-6"	7'-6"
36"	6'-0"	9'-0"

MULTIPLE INSTALLATION OF PVC PIPES

PIPE DIAMETER	CLEAR DISTANCE BETWEEN PIPES
18"	1'-6"
24"	2'-0"
30"	2'-6"
36"	3'-0"

MAXIMUM FILL HEIGHT BASED ON STRUCTURAL BACKFILL

PIPE DIAMETER	"H"
18"	45'-0"
24"	45'-0"
30"	40'-0"
36"	40'-0"

① NOTE:
12" MIN. (18" - 36" DIAMETERS)
MINIMUM COVER VALUE, "H" SHALL INCLUDE A MINIMUM 12" OF PAVEMENT AND/OR BASE.

MINIMUM COVER FOR CONSTRUCTION LOADS

PIPE DIAMETER	② MIN. COVER (FEET) FOR INDICATED CONSTRUCTION LOADS 18.0-50.0 (KIPS)	50.0-75.0 (KIPS)	75.0-110.0 (KIPS)	110.0-175.0 (KIPS)
18" THRU 36"	2'-0"	2'-6"	3'-0"	3'-0"

②MINIMUM COVER SHALL BE MEASURED FROM TOP OF PIPE TO TOP OF THE MAINTAINED CONSTRUCTION ROADWAY SURFACE. THE SURFACE SHALL BE MAINTAINED.

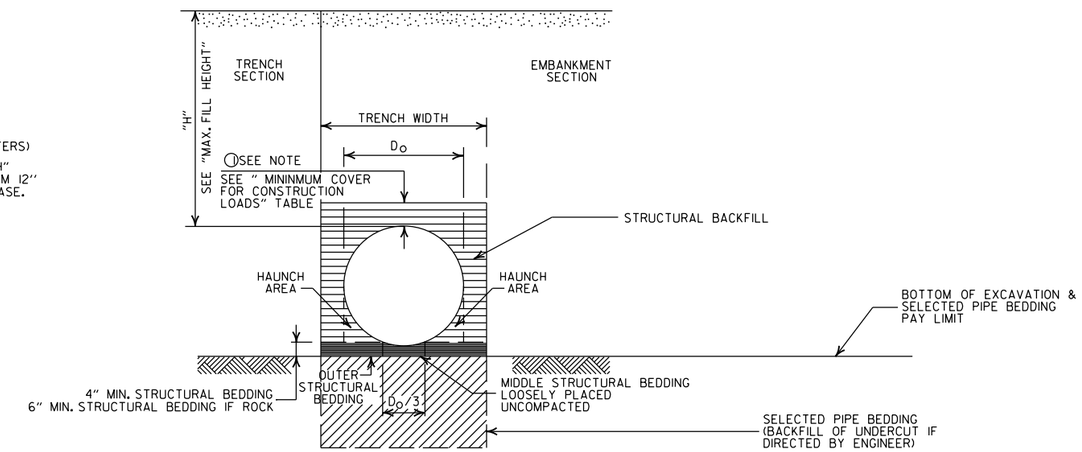

TYPE 2 EMBANKMENT AND TRENCH INSTALLATIONS

1. STRUCTURAL BACKFILL, EMBANKMENT, AND OUTER STRUCTURAL BEDDING MATERIAL SHALL BE COMPACTED TO 95% OF THE MAXIMUM DENSITY ACCORDING TO THE TYPE OR CLASS OF MATERIAL USED.

CONSTRUCTION SEQUENCE

1. PLACE STRUCTURAL BEDDING MATERIAL TO GRADE. DO NOT COMPACT.
2. INSTALL PIPE TO GRADE.
3. COMPACT STRUCTURAL BEDDING OUTSIDE THE MIDDLE THIRD OF THE PIPE.
4. THE STRUCTURAL BACKFILL SHALL BE PLACED AND COMPACTED IN LAYERS NOT EXCEEDING 8". THE LAYERS SHALL BE BROUGHT UP EVENLY AND SIMULTANEOUSLY TO THE ELEVATION OF THE MINIMUM COVER.
5. PIPE INSTALLATION MAY REQUIRE THE USE OF RESTRAINTS, WEIGHTING OR OTHER APPROVED METHODS IN ORDER TO HELP MAINTAIN GRADE AND ALIGNMENT.

GENERAL NOTES

1. PIPE SHALL CONFORM TO ASTM F949, CELL CLASS 12454. INSTALLATION SHALL CONFORM TO JOB SPECIAL PROVISION "PLASTIC PIPE" AND SECTION 606 OF THE STANDARD SPECIFICATIONS FOR HIGHWAY CONSTRUCTION (CURRENT EDITION).
2. PLASTIC PIPE CULVERT DESIGN SHALL CONFORM TO AASHTO LRFD BRIDGE DESIGN SPECIFICATIONS, FIFTH EDITION (2010) WITH 2010 INTERIMS.
3. THE MAXIMUM ALLOWABLE TRENCH WIDTH SHALL BE THE MINIMUM WIDTH PLUS A SUFFICIENT WIDTH TO ENSURE WORKING ROOM TO PROPERLY AND SAFELY PLACE AND COMPACT HAUNCHING AND OTHER BACKFILL MATERIAL.
4. IMPERVIOUS MATERIAL SHOULD BE PLACED AS DIRECTED BY THE ENGINEER AT THE ENDS OF THE CULVERT TO PREVENT LOSS OF STRUCTURAL BEDDING WHEN PERVIOUS MATERIAL IS USED FOR STRUCTURAL BEDDING AND/OR BACKFILL.
5. WHEN DIRECTED BY THE ENGINEER, UNSUITABLE MATERIAL THAT IS ENCOUNTERED AT THE BOTTOM OF THE EXCAVATED TRENCH (BELOW THE AREA IDENTIFIED AS "STRUCTURAL BEDDING" ABOVE) WILL BE EXCAVATED AND REPLACED WITH SELECTED PIPE BEDDING. THE QUANTITY OF MATERIAL REQUIRED TO BACKFILL THE UNDERCUT AREA UP TO THE SELECTED PIPE BEDDING PAY LIMIT DESIGNATED ABOVE WILL BE MEASURED AND PAID FOR AS "SELECTED PIPE BEDDING."
6. WHEN THE EXISTING MATERIAL EXCAVATED FOR THE PIPE TRENCH IS DETERMINED BY THE ENGINEER TO BE UNSUITABLE FOR BACKFILLING THE PIPE (ABOVE THE AREA IDENTIFIED ABOVE AS STRUCTURAL BACKFILL), BORROW MATERIAL OR MATERIAL FROM THE ROADWAY EXCAVATION WILL BE USED TO BACKFILL THE PIPE. IF SUITABLE MATERIAL IS NOT AVAILABLE, THE ENGINEER MAY AUTHORIZE THE USE OF "SELECTED PIPE BACKFILL."
7. FOR PIPE TYPES THAT ARE NOT SMOOTH ON THE OUTSIDE (CORRUGATED OR PROFILE WALLS), BACKFILL GRADATIONS SHOULD BE SELECTED THAT WILL PERMIT THE FILLING OF THE CORRUGATION OR PROFILE VALLEY.
8. PVC PIPES OF DIAMETERS OTHER THAN SHOWN WILL NOT BE ALLOWED.
9. JOINTS FOR PVC PIPE SHALL MEET THE REQUIREMENTS FOR SOIL TIGHTNESS AS SPECIFIED IN AASHTO SECTION 26.4.2.4 AND 30.4.2 "AASHTO LRFD BRIDGE CONSTRUCTION SPECIFICATIONS." JOINTS SHALL BE INSTALLED PER MANUFACTURER'S RECOMMENDATIONS.

- LEGEND -

H = FILL HEIGHT (FT.)
D_O = OUTSIDE DIAMETER OF PIPE
MAX. = MAXIMUM
MIN. = MINIMUM

= STRUCTURAL BACKFILL MATERIAL

= UNDISTURBED SOIL

DATE	REVISION	DATE FILMED
2-27-14	REVISED GENERAL NOTE 1.	
12-15-11	REV GENERAL NOTES & MINIMUM COVER NOTE; DELETED SM3 MATERIAL	
11-17-10	ISSUED	

ARKANSAS STATE HIGHWAY COMMISSION

PLASTIC PIPE CULVERT (PVC F949)

STANDARD DRAWING PCP-2

INSTALLATION TYPE	**MATERIAL REQUIREMENTS FOR STRUCTURAL BACKFILL AND STRUCTURAL BEDDING
TYPE 1	AGGREGATE BASE COURSE (CLASS 4, 5, 6, OR 7)
TYPE 2	*SELECTED MATERIALS (CLASS SM-1, SM-2 OR SM-4) OR TYPE 1 INSTALLATION MATERIAL

*SM3 WILL NOT BE ALLOWED.

** STRUCTURAL BEDDING MATERIAL SHALL HAVE A MAXIMUM PARTICLE SIZE OF 1 INCH. STRUCTURAL BACKFILL MATERIAL SHALL BE FREE OF ORGANIC MATERIAL, STONES LARGER THAN 1.50 INCH IN GREATEST DIMENSION, OR FROZEN LUMPS.

STRUCTURAL BACKFILL AND STRUCTURAL BEDDING MATERIAL WILL NOT BE PAID FOR SEPARATELY, BUT COMPENSATION WILL BE CONSIDERED TO BE INCLUDED IN THE PRICE BID PER LINEAR FOOT OF POLYPROPYLENE PIPE.

MINIMUM TRENCH WIDTH BASED ON FILL HEIGHT "H"

PIPE DIAMETER	TRENCH WIDTH (FEET) "H" < 10'-0"	TRENCH WIDTH (FEET) "H" >OR= 10'-0"
18"	4'-6"	4'-6"
24"	5'-0"	6'-0"
30"	5'-6"	7'-6"
36"	6'-0"	9'-0"
42"	7'-0"	10'-6"
48"	8'-0"	12'-0"
60"	10'-0"	15'-0"

(1) NOTE:
12" MIN. (18" - 42" DIAMETERS)
24" MIN. (60" DIAMETER)

MINIMUM COVER VALUES, "H" SHALL INCLUDE A MINIMUM 12" OF PAVEMENT AND/OR BASE.

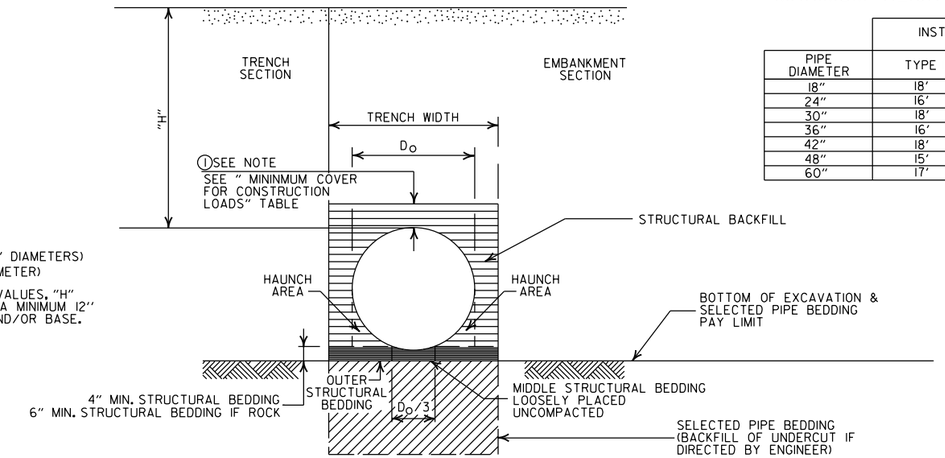

MAXIMUM HEIGHT OF FILL "H"

PIPE DIAMETER	INSTALLATION TYPE TYPE 1	INSTALLATION TYPE TYPE 2
18"	18'	14'
24"	16'	12'
30"	18'	14'
36"	16'	12'
42"	18'	13'
48"	15'	11'
60"	17'	12'

MULTIPLE INSTALLATION OF POLYPROPYLENE PIPES

PIPE DIAMETER	CLEAR DISTANCE BETWEEN PIPES
18"	1'-6"
24"	2'-0"
30"	2'-6"
36"	3'-0"
42"	3'-6"
48"	4'-0"
60"	5'-0"

MINIMUM COVER FOR CONSTRUCTION LOADS

PIPE DIAMETER	(2) MIN. COVER (FEET) FOR INDICATED CONSTRUCTION LOADS 18.0-50.0 (KIPS)	50.0-75.0 (KIPS)	75.0-110.0 (KIPS)	110.0-150.0 (KIPS)
36" OR LESS	2'-0"	2'-6"	3'-0"	3'-0"
42" OR GREATER	3'-0"	3'-0"	3'-6"	4'-0"

(2) MINIMUM COVER SHALL BE MEASURED FROM TOP OF PIPE TO TOP OF THE MAINTAINED CONSTRUCTION ROADWAY SURFACE. THE SURFACE SHALL BE MAINTAINED.

EMBANKMENT AND TRENCH INSTALLATIONS

1. STRUCTURAL BACKFILL, EMBANKMENT, AND OUTER STRUCTURAL BEDDING MATERIAL SHALL BE COMPACTED TO 95% OF THE MAXIMUM DENSITY ACCORDING TO THE TYPE OR CLASS OF MATERIAL USED.

CONSTRUCTION SEQUENCE

1. PLACE STRUCTURAL BEDDING MATERIAL TO GRADE. DO NOT COMPACT.
2. INSTALL PIPE TO GRADE.
3. COMPACT STRUCTURAL BEDDING OUTSIDE THE MIDDLE THIRD OF THE PIPE.
4. THE STRUCTURAL BACKFILL SHALL BE PLACED AND COMPACTED IN LAYERS NOT EXCEEDING 8". THE LAYERS SHALL BE BROUGHT UP EVENLY AND SIMULTANEOUSLY TO THE ELEVATION OF THE MINIMUM COVER.
5. PIPE INSTALLATION MAY REQUIRE THE USE OF RESTRAINTS, WEIGHTING OR OTHER APPROVED METHODS IN ORDER TO HELP MAINTAIN GRADE AND ALIGNMENT.

GENERAL NOTES

1. PIPE SHALL CONFORM TO AASHTO M330, TYPE S. INSTALLATION SHALL CONFORM TO JOB SPECIAL PROVISION "PLASTIC PIPE" AND SECTION 606 OF THE STANDARD SPECIFICIATIONS FOR HIGHWAY CONSTRUCTION (CURRENT EDITION).
2. PLASTIC PIPE CULVERT DESIGN SHALL CONFORM TO AASHTO LRFD BRIDGE DESIGN SPECIFICATIONS, SIXTH EDITION (2012) WITH 2013 INTERIMS.
3. THE MAXIMUM ALLOWABLE TRENCH WIDTH SHALL BE THE MINIMUM WIDTH PLUS A SUFFICIENT WIDTH TO ENSURE WORKING ROOM TO PROPERLY AND SAFELY PLACE AND COMPACT HAUNCHING AND OTHER BACKFILL MATERIAL.
4. IMPERVIOUS MATERIAL SHOULD BE PLACED AS DIRECTED BY THE ENGINEER AT THE ENDS OF THE CULVERT TO PREVENT LOSS OF STRUCTURAL BEDDING WHEN PERVIOUS MATERIAL IS USED FOR STRUCTURAL BEDDING AND/OR BACKFILL.
5. WHEN DIRECTED BY THE ENGINEER, UNSUITABLE MATERIAL THAT IS ENCOUNTERED AT THE BOTTOM OF THE EXCAVATED TRENCH (BELOW THE AREA IDENTIFIED AS "STRUCTURAL BEDDING" ABOVE) WILL BE EXCAVATED AND REPLACED WITH SELECTED PIPE BEDDING. THE QUANTITY OF MATERIAL REQUIRED TO BACKFILL THE UNDERCUT AREA UP TO THE SELECTED PIPE BEDDING PAY LIMIT DESIGNATED ABOVE WILL BE MEASURED AND PAID FOR AS "SELECTED PIPE BEDDING."
6. WHEN THE EXISTING MATERIAL EXCAVATED FOR THE PIPE TRENCH IS DETERMINED BY THE ENGINEER TO BE UNSUITABLE FOR BACKFILLING THE PIPE (ABOVE THE AREA IDENTIFIED ABOVE AS STRUCTURAL BACKFILL), BORROW MATERIAL OR MATERIAL FROM THE ROADWAY EXCAVATION WILL BE USED TO BACKFILL THE PIPE. IF SUITABLE MATERIAL IS NOT AVAILABLE, THE ENGINEER MAY AUTHORIZE THE USE OF "SELECTED PIPE BACKFILL."
7. FOR PIPE TYPES THAT ARE NOT SMOOTH ON THE OUTSIDE (CORRUGATED OR PROFILE WALLS), BACKFILL GRADATIONS SHOULD BE SELECTED THAT WILL PERMIT THE FILLING OF THE CORRUGATION OR PROFILE VALLEY.
8. POLYPROPYLENE PIPES OF DIAMETERS OTHER THAN SHOWN WILL NOT BE ALLOWED.
9. JOINTS FOR POLYPROPYLENE PIPE SHALL MEET THE REQUIREMENTS FOR SOIL TIGHTNESS AS SPECIFIED IN SECTION 26.4.2.4 AND 30.4.2 OF THE AASHTO LRFD BRIDGE CONSTRUCTION SPECIFICATIONS 3RD EDITION (2010) WITH 2012 INTERIMS. JOINTS SHALL BE INSTALLED PER MANUFACTURER'S RECOMMENDATIONS.

- LEGEND -

H = FILL HEIGHT (FT.)
D_O = OUTSIDE DIAMETER OF PIPE
MAX. = MAXIMUM
MIN. = MINIMUM

= STRUCTURAL BACKFILL MATERIAL
= UNDISTURBED SOIL

DATE	REVISION	DATE FILMED
02-27-20	REVISED	
11-07-19	ISSUED	

ARKANSAS STATE HIGHWAY COMMISSION

PLASTIC PIPE CULVERT (POLYPROPYLENE)

STANDARD DRAWING PCP-3

NOTES:

1. REFER TO THE STRIPING DETAILS FOR PAVEMENT MARKING LINE WIDTHS.
2. THIS DRAWING SHALL BE USED IN CONJUNCTION WITH THE LATEST REVISED ADDITION OF THE "MANUAL ON UNIFORM TRAFFIC CONTROL DEVICES."
3. RAISED PAVEMENT MARKERS SHALL BE PLACED ON AN 80 FEET SPACING UNLESS OTHERWISE SHOWN IN THE PLANS.

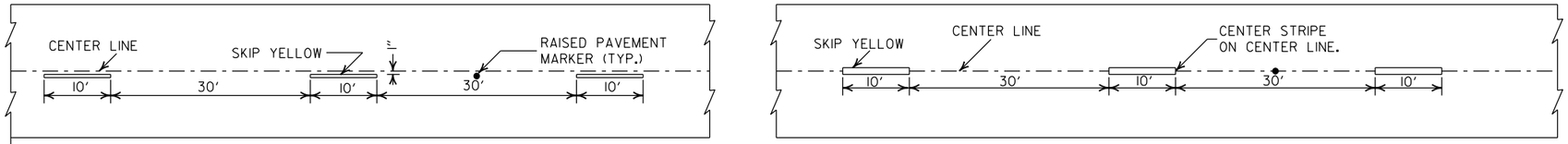

CONCRETE PAVEMENT

ASPHALT PAVEMENT

BROKEN LINE STRIPING

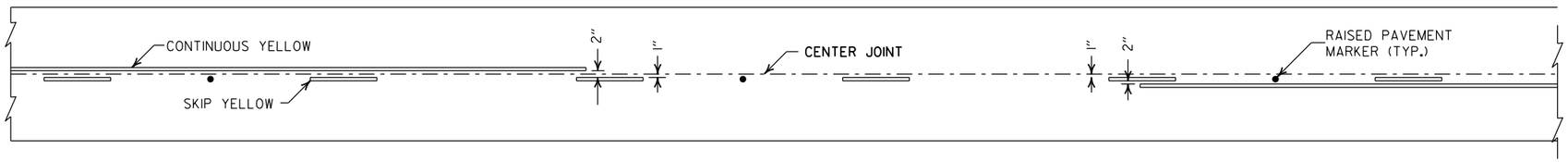

SOLID LINE STRIPING ON CONCRETE PAVEMENT

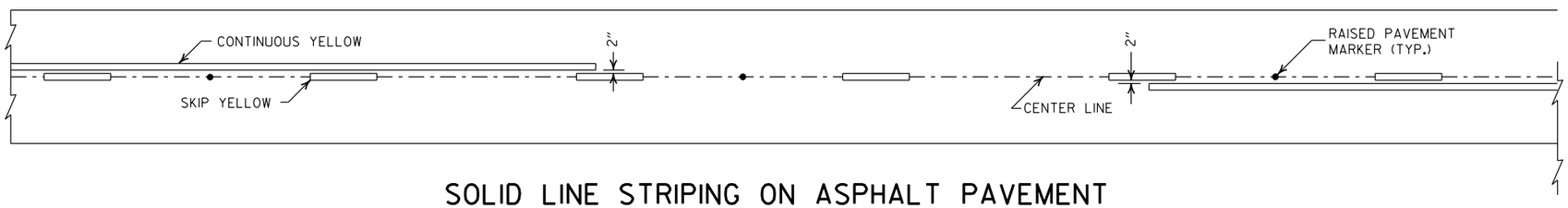

SOLID LINE STRIPING ON ASPHALT PAVEMENT

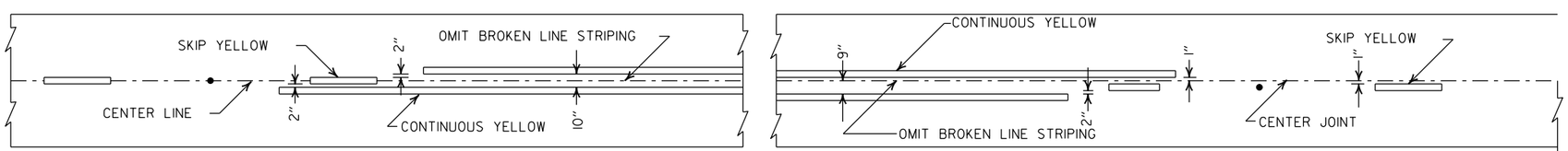

ASPHALT PAVEMENT

CONCRETE PAVEMENT

STRIPING AT ADJACENT NO PASSING LANES

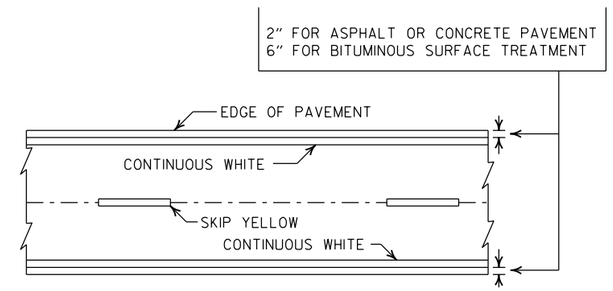

PAVEMENT EDGE LINE MARKING

NOTE:
THE RED LENS OF THE TYPE II R.P.M. SHALL FACE THE INCORRECT TRAFFIC MOVEMENT.

NOTE:
DIMENSIONS SHOWN FOR RAISED PAVEMENT MARKERS ARE TYPICAL. THE CONTRACTOR MAY SUBSTITUTE SIMILAR MARKERS WITH THE APPROVAL OF THE ENGINEER. REQUESTING APPROVAL FOR SIMILAR MARKERS MAY BE MADE BY REFERRING TO THE ARDOT QUALIFIED PRODUCTS LIST.

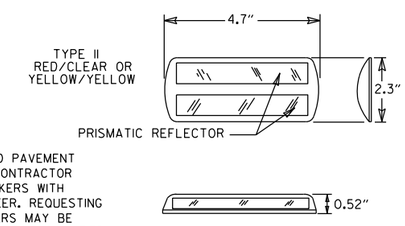

DETAIL OF STANDARD RAISED PAVEMENT MARKERS

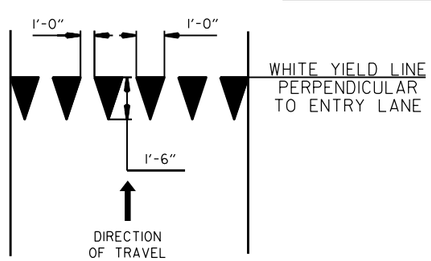

YIELD LINE DETAIL

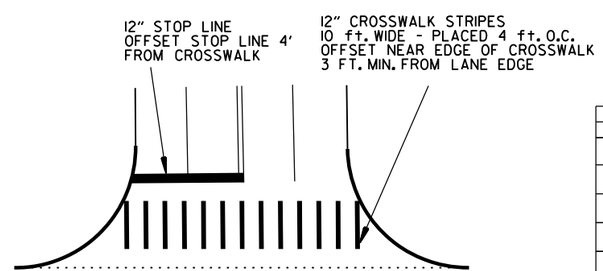

CROSSWALK AND STOP LINE DETAILS

DATE	REVISION	FILMED
2-27-20	REVISED STOP LINE DETAILS	
6-1-17	ADDED YIELD LINE DETAIL	
5-12-16	REVISED LINE WIDTHS, SPACING, & NOTES	
9-12-13	REVISED DETAIL OF STANDARD RAISED PAVEMENT MARKERS	
11-17-10	REVISED GENERAL NOTES & REMOVED PLOWABLE PVMT MRKRS	
11-18-04	REVISED NOTE 2 & GENERAL NOTES	
8-22-02	ADDED CROSSWALK & STOPBAR DTLS.	
7-02-98	ADDED DETAILS OF STD. RAISED PAV'T. MARKERS	
4-26-96	REV. NOTES 3&4; ADDED R.P.M.	
9-30-80	DRAWN	1-9-30-80

ARKANSAS STATE HIGHWAY COMMISSION

PAVEMENT MARKING DETAILS

STANDARD DRAWING PM-1

NOTE:

1. UNLESS OTHERWISE SPECIFIED ON THE PLANS, THE UNDERDRAIN COVER SHALL BE THOROUGHLY COMPACTED EARTH AND SHALL BE SUBSIDIARY TO PIPE UNDERDRAIN.

2. GRANULAR MATERIAL SHALL BE WRAPPED WITH GEOTEXTILE FABRIC. LAP FABRIC 12" OR THE WIDTH OF THE TRENCH AT THE TOP.

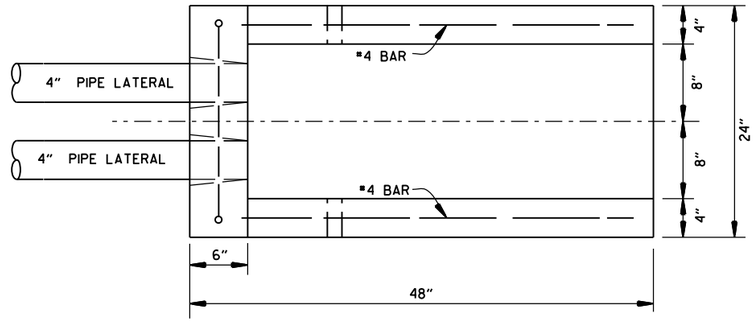

PLAN VIEW

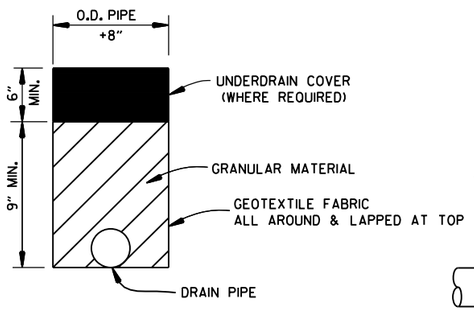

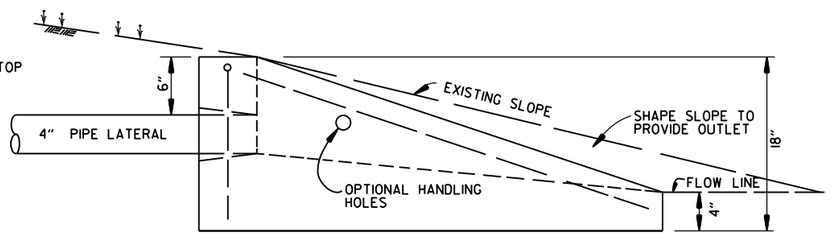

SIDE VIEW

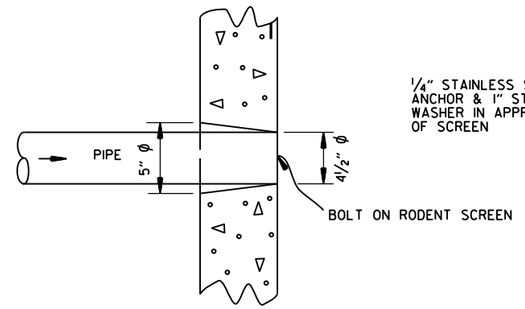

DETAIL OF HOLE
FOR 4" PIPE

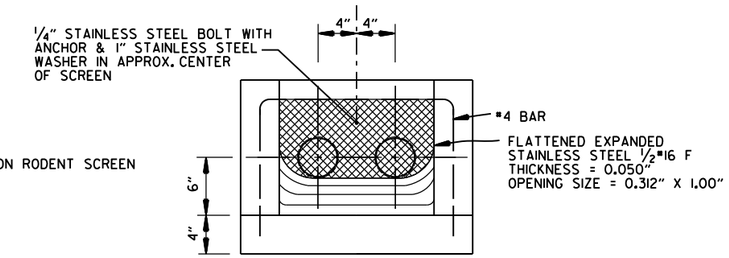

FRONT VIEW
(DETAIL OF RODENT SCREEN)

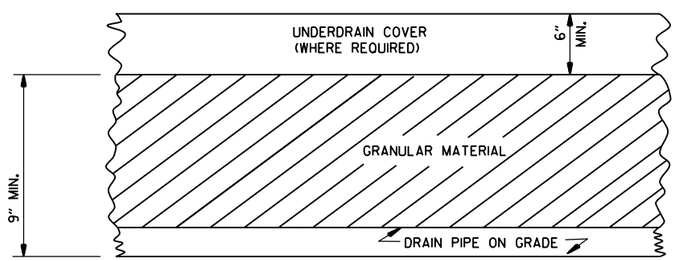

DETAILS OF PIPE UNDERDRAIN

UNDERDRAIN OUTLET PROTECTORS

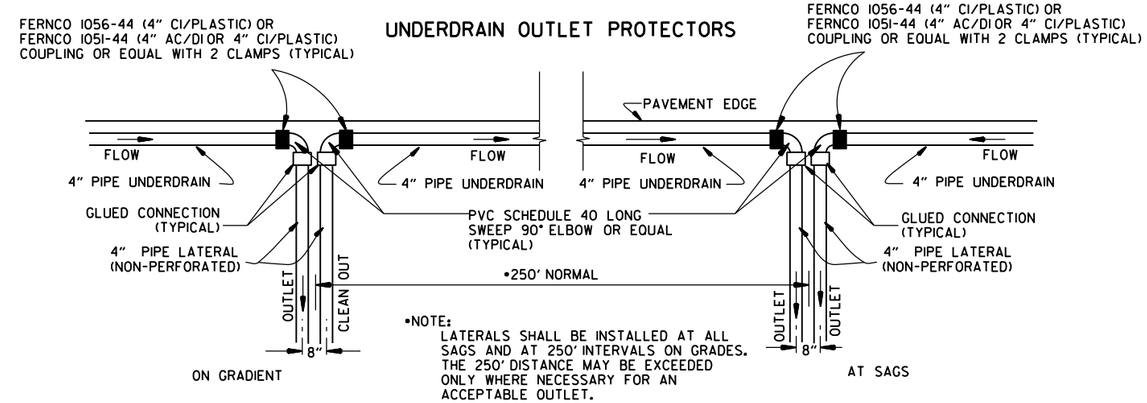

•NOTE:
LATERALS SHALL BE INSTALLED AT ALL SAGS AND AT 250' INTERVALS ON GRADES. THE 250' DISTANCE MAY BE EXCEEDED ONLY WHERE NECESSARY FOR AN ACCEPTABLE OUTLET.

DETAIL OF PIPE UNDERDRAIN LATERALS WHEN PLACED ALONG PAVEMENT EDGE

NOTE: PVC PIPE FOR LATERALS SHALL MEET THE REQUIREMENTS OF ASTM D 1785 (LATEST REVISION) FOR SCHEDULE 40 PIPE.

NOTES FOR PIPE UNDERDRAINS

1. GEOTEXTILE FABRIC SHALL MEET THE REQUIREMENTS OF SECTION 625 FOR TYPE I. PAYMENT FOR GEOTEXTILE FABRIC AND GRANULAR FILTER MATERIAL SHALL BE INCLUDED IN THE PRICE BID PER LIN. FT. FOR "4" PIPE UNDERDRAINS" IN ACCORDANCE WITH SECTION 611 OF THE STANDARD SPECIFICATIONS.

2. 4" NON-PERFORATED SCHEDULE 40 PVC PIPE LATERALS WITH OUTLET PROTECTORS SHALL BE INSTALLED AS SHOWN HEREON. LATERALS WILL BE MEASURED AND PAID FOR AS "4" PIPE UNDERDRAINS." UNDERDRAIN OUTLET PROTECTORS WILL BE MEASURED AND PAID FOR BY THE UNIT IN ACCORDANCE WITH SECTION 611 OF THE STANDARD SPECIFICATIONS.

3. EXISTING 4" PIPE UNDERDRAINS MAY BE CONNECTED TO PROPOSED DROP INLETS OR EXTENDED WHERE DIRECTED BY THE ENGINEER. PAYMENT FOR CONNECTING TO DROP INLETS SHALL BE CONSIDERED INCLUDED IN THE PRICE BID FOR "4" PIPE UNDERDRAINS."

4. THE LOCATION OF ALL LATERALS SHALL BE MARKED WITH 4" X 12" PERMANENT PAVEMENT MARKING TAPE (TYPE III WHITE) AT THE OUTSIDE EDGE OF THE SHOULDER, PLACED TRANSVERSE TO TRAFFIC. PAYMENT FOR THIS WORK SHALL BE INCLUDED IN THE PRICE BID FOR THE VARIOUS CONTRACT ITEMS.

5. PAYMENT FOR THE RODENT SCREEN SHALL BE INCLUDED IN THE PRICE BID PER EACH FOR "UNDERDRAIN OUTLET PROTECTORS."

6. ANY EXISTING UNDERDRAINS THAT INTERFERE WITH INSTALLATION OF THE NEW UNDERDRAIN SYSTEM SHALL BE REMOVED AND DISPOSED OF AS DIRECTED BY THE ENGINEER. PAYMENT WILL BE CONSIDERED INCLUDED IN THE PRICE BID FOR THE VARIOUS CONTRACT ITEMS. EXISTING UNDERDRAIN OUTLET PROTECTORS SHALL BE REMOVED UNDER THE ITEM "REMOVAL AND DISPOSAL OF UNDERDRAIN OUTLET PROTECTORS."

7. AT LOCATIONS WHERE A SINGLE LATERAL IS USED THE CONTRACTOR SHALL HAVE THE FOLLOWING OPTIONS: 1. INSTALL OUTLET PROTECTOR AS SHOWN ON STANDARD DRAWING PU-1 AND GROUT THE UNUSED HOLE OR 2. INSTALL AN OUTLET PROTECTOR WITH A SINGLE HOLE.

DATE	REVISION	DATE FILMED
12-8-16	ADDED NOTES FOR PIPE UNDERDRAINS, REVISED RODENT SCREEN DETAIL AND NOTES, REMOVED NOTE 1 FOR GRANULAR MATERIAL, ADDED NOTE FOR GEOTEXTILE FABRIC	
4-10-03	REVISED NOTE 3	
1-12-00	REVISED DETAIL OF UNDERDRAIN LATERALS	
11-18-98	REVISED NOTE	
10-18-96	REVISED MIN. DEPTH & GEOTEXTILE FABRIC	
4-26-96	ADDED LATERAL NOTE; 5½" TO 5"	
11-22-95	REVISED LATERALS	
7-20-95	REVISED LATERALS & ADDED NOTE	
11- 3-94	REVISED FOR DUAL LATERALS	11- 3-94
10- 1-92	SUBSTITUTED GEOTEXTILE	10- 1-92
8-15-91	ADDED POLYEDTHYLENE PIPE	8-15-91
11- 8-90	DELETED ALTERNATE NOTE	11- 8-90
1-25-90	ADDED 4" SNAP ADAPTER	1-25-90
11-30-89	DEL. (SUBGRADE); ADDED (WHERE REQUIRED)	11-30-89
7-15-88	ISSUED P.L.M.	647-7-15-88

ARKANSAS STATE HIGHWAY COMMISSION

DETAILS OF PIPE UNDERDRAIN

STANDARD DRAWING PU-1

SUPERELEVATION TABLE FOR ONE - WAY TRAFFIC

DEGREE OF CURVE	30 MPH			35 MPH			40 MPH			45 MPH		
	e	Ls (FT) MINIMUM	Ls (FT) DESIRABLE	e	Ls (FT) MINIMUM	Ls (FT) DESIRABLE	e	Ls (FT) MINIMUM	Ls (FT) DESIRABLE	e	Ls (FT) MINIMUM	Ls (FT) DESIRABLE
0° 15'	NC			NC			NC			NC		
0° 30'	NC			NC			NC			NC		
0° 45'	NC			NC			NC			NC		
1° 00'	NC			NC			NC			RC	108	
1° 15'	NC			NC			RC	101		0.022	114	
1° 30'	NC			RC	94		0.022	106		0.028	130	
1° 45'	RC	86		RC	94		0.026	116		0.030	136	
2° 00'	RC	86		0.024	103		0.028	121		0.034	146	
2° 15'	RC	86		0.026	108		0.032	131		0.038	157	
2° 30'	0.022	90		0.028	113		0.034	136		0.042	168	
2° 45'	0.024	95		0.030	118		0.038	146		0.046	179	
3° 00'	0.026	100		0.034	126		0.040	151		0.050	190	300
3° 15'	0.028	103		0.036	131		0.044	161		0.052	194	
3° 30'	0.030	108		0.038	136		0.046	167	250	0.056	205	
3° 45'	0.032	112		0.040	140		0.050	176		0.058	211	
4° 00'	0.034	116		0.042	145	250	0.052	181		0.062	222	
4° 15'	0.036	120		0.044	150		0.054	186		0.064	227	
4° 30'	0.036	120		0.046	155		0.056	192		0.068	238	
4° 45'	0.038	125		0.048	160		0.060	202		0.070	244	
5° 00'	0.040	130		0.050	164		0.062	206		0.072	248	
5° 30'	0.044	138	250	0.054	173		0.066	217		0.078	265	
6° 00'	0.046	143		0.058	182		0.070	227		0.082	276	
6° 30'	0.050	151		0.062	192		0.074	238		0.086	287	
7° 00'	0.052	156		0.064	197		0.078	247		0.090	298	
7° 30'	0.054	160		0.068	206		0.080	252		0.092	302	350
8° 00'	0.058	168		0.070	211		0.084	263		0.094	308	
8° 30'	0.060	173		0.072	215		0.086	268	300	0.096	313	
9° 00'	0.062	178		0.076	224		0.088	272		0.098	319	
9° 30'	0.064	181		0.078	229		0.092	282		0.100	324	
10° 00'	0.066	186		0.080	234		0.094	288				
11° 00'	0.070	194		0.084	244		0.096	293				
12° 00'	0.074	203		0.088	253		0.098	298				
13° 00'	0.076	208		0.090	258	300	0.100	302	350			
14° 00'	0.080	216		0.094	266							
15° 00'	0.082	221		0.096	271							
16° 00'	0.086	229		0.098	276							
17° 00'	0.088	233		0.100	281							
18° 00'	0.090	238										
19° 00'	0.092	242										
20° 00'	0.094	246										
21° 00'	0.096	251	300									
22° 00'	0.096	251										
23° 00'	0.098	254										
24° 00'	0.098	254										
25° 00'	0.100	259										
	D MAX = 28° 30'			D MAX = 19° 30'			D MAX = 13° 45'			D MAX = 10° 30'		

DEGREE OF CURVE	50 MPH			55 MPH			60 MPH			65 MPH		
	e	Ls (FT) MINIMUM	Ls (FT) DESIRABLE	e	Ls (FT) MINIMUM	Ls (FT) DESIRABLE	e	Ls (FT) MINIMUM	Ls (FT) DESIRABLE	e	Ls (FT) MINIMUM	Ls (FT) DESIRABLE
0° 15'	NC			NC			NC			NC		
0° 30'	NC			NC			RC	115		RC	115	
0° 45'	RC	115		RC	115		0.024	127		0.026	132	
1° 00'	0.022	121		0.026	132		0.030	144		0.034	156	
1° 15'	0.028	138		0.032	150		0.038	167		0.042	179	
1° 30'	0.032	150		0.038	167		0.044	185		0.050	202	350
1° 45'	0.036	161		0.044	185		0.050	202	350	0.056	218	
2° 00'	0.042	179		0.048	196		0.056	218		0.064	242	
2° 15'	0.046	190		0.054	214		0.062	236		0.070	259	
2° 30'	0.050	202		0.058	224	350	0.068	253		0.076	276	
2° 45'	0.054	214	300	0.064	242		0.072	265		0.082	294	
3° 00'	0.058	224		0.068	253		0.078	282		0.088	311	
3° 15'	0.062	236		0.072	265		0.082	294		0.092	323	400
3° 30'	0.066	247		0.076	276		0.086	305		0.096	334	
3° 45'	0.070	259		0.080	288		0.090	317		0.098	340	
4° 00'	0.072	265		0.084	300		0.094	329	400	0.100	346	
4° 15'	0.076	276		0.086	305		0.096	334				
4° 30'	0.078	282		0.090	317		0.098	340				
4° 45'	0.082	294		0.092	323		0.100	346				
5° 00'	0.084	300		0.094	329	400						
5° 30'	0.088	311		0.098	340							
6° 00'	0.092	323		0.100	346							
6° 30'	0.096	334	350									
7° 00'	0.098	340										
7° 30'	0.100	346										
8° 00'												
8° 30'												
9° 00'												
9° 30'												
10° 00'												
11° 00'												
12° 00'												
13° 00'												
14° 00'												
15° 00'												
16° 00'												
17° 00'												
18° 00'												
19° 00'												
20° 00'												
21° 00'												
22° 00'												
23° 00'												
24° 00'												
25° 00'												
	D MAX = 8° 25'			D MAX = 6° 30'			D MAX = 5° 15'			D MAX = 4° 15'		

DEGREE OF CURVE	70 MPH			75 MPH		
	e	Ls (FT) MINIMUM	Ls (FT) DESIRABLE	e	Ls (FT) MINIMUM	Ls (FT) DESIRABLE
0° 15'	NC			NC		
0° 30'	RC	115		0.022	121	
0° 45'	0.030	144		0.032	150	
1° 00'	0.038	167		0.042	179	350
1° 15'	0.046	190	350	0.052	208	
1° 30'	0.056	218		0.062	236	
1° 45'	0.064	242		0.070	259	
2° 00'	0.070	259		0.080	288	400
2° 15'	0.078	282		0.088	311	
2° 30'	0.086	305	400	0.096	334	450
2° 45'	0.092	323		0.100	346	
3° 00'	0.098	340	450			
3° 15'	0.100	346				
3° 30'						
3° 45'						
4° 00'						
4° 15'						
4° 30'						
4° 45'						
5° 00'						
5° 30'						
6° 00'						
6° 30'						
7° 00'						
7° 30'						
8° 00'						
8° 30'						
9° 00'						
9° 30'						
10° 00'						
11° 00'						
12° 00'						
13° 00'						
14° 00'						
15° 00'						
16° 00'						
17° 00'						
18° 00'						
19° 00'						
20° 00'						
21° 00'						
22° 00'						
23° 00'						
24° 00'						
25° 00'						
	D MAX = 3° 30'			D MAX = 2° 45'		

ABBREVIATIONS

NC - NORMAL CROWN
RC - REVERSE CROWN, SUPERELEVATION AT NORMAL CROWN SLOPE
S - SUPERELEVATION
L - DISTANCE FROM BEGINNING OF SUPERELEVATION TRANSITION TO ANY POINT (FT.)
d - WIDTH OF PAVEMENT
e - MAXIMUM RATE OF SUPERELEVATION (FT. PER FT.)
Ls - LENGTH OF SUPERELEVATION TRANSITION (FT.)
C - NORMAL CROWN (FT.)

GENERAL NOTES

1. ON PAVEMENT WITH ONE-WAY TRAFFIC, THE SUPERELEVATION SHALL BE REVOLVED ON THE PROFILE GRADE POINT.
2. SUPERELEVATION VALUES SHOWN ON THE CROSS SECTIONS ARE VALUES (+) OR (-) TO BE ADDED OR SUBTRACTED FROM THE POINT OF CONTROL.
3. LENGTHS FOR Ls MAY BE ROUNDED IN MULTIPLES OF 25 FT. OR 50 FT. TO PERMIT SIMPLER CALCULATIONS.
4. MINIMUM Ls VALUES MAY BE USED FOR RAMPS; DESIRABLE VALUES SHALL APPLY TO MAIN LANES.
5. DIVIDED PAVEMENTS WIDER THAN 4 LANES SHALL HAVE ADDITIONAL TRANSITION LENGTHS AS FOLOWS:

6 LANE DIVIDED---------+20%
8 LANE DIVIDED---------+50%

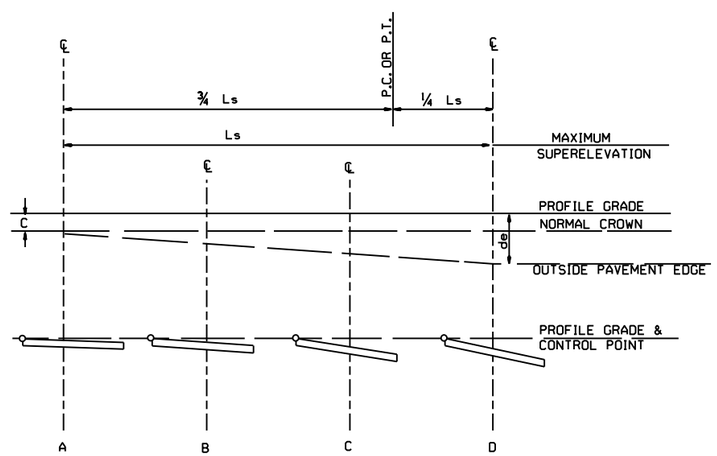

ONE-WAY TRAFFIC INSIDE LANE

SUPERELEVATION FORMULA = $S = -\frac{L(de-C)}{Ls} - C$

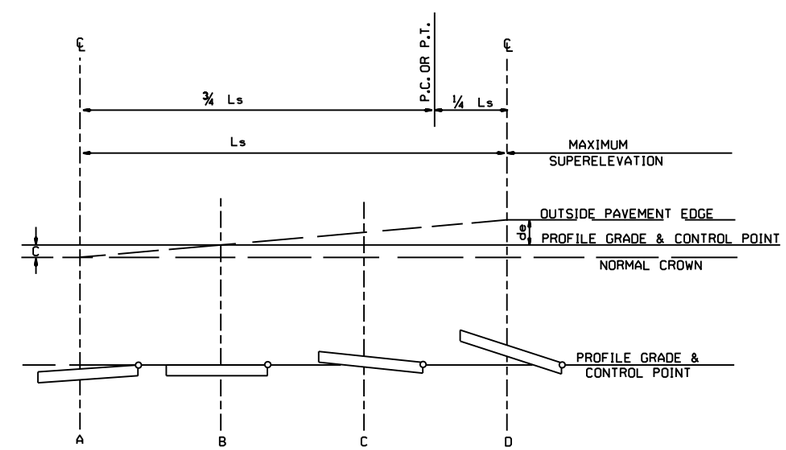

ONE-WAY TRAFFIC OUTSIDE LANE

SUPERELEVATION FORMULA = $S = +\frac{L(de+C)}{Ls} - C$

DATE	REVISION	DATE FILMED
11-07-19	REVISED SUPERELEVATION TABLE	
01-09-87	ISSUED	578-1-15-87

ARKANSAS STATE HIGHWAY COMMISSION

TABLES AND METHOD OF SUPERELEVATION FOR ONE-WAY TRAFFIC

STANDARD DRAWING SE-1

SUPERELEVATION TABLE FOR TWO - WAY TRAFFIC

DEGREE OF CURVE	30 MPH e	30 MPH Ls (FT) MINIMUM	30 MPH Ls (FT) DESIRABLE	35 MPH e	35 MPH Ls (FT) MINIMUM	35 MPH Ls (FT) DESIRABLE	40 MPH e	40 MPH Ls (FT) MINIMUM	40 MPH Ls (FT) DESIRABLE	45 MPH e	45 MPH Ls (FT) MINIMUM	45 MPH Ls (FT) DESIRABLE	50 MPH e	50 MPH Ls (FT) MINIMUM	50 MPH Ls (FT) DESIRABLE	55 MPH e	55 MPH Ls (FT) MINIMUM	55 MPH Ls (FT) DESIRABLE	60 MPH e	60 MPH Ls (FT) MINIMUM	60 MPH Ls (FT) DESIRABLE	65 MPH e	65 MPH Ls (FT) MINIMUM	65 MPH Ls (FT) DESIRABLE	70 MPH e	70 MPH Ls (FT) MINIMUM	70 MPH Ls (FT) DESIRABLE	75 MPH e	75 MPH Ls (FT) MINIMUM	75 MPH Ls (FT) DESIRABLE
0° 15'	NC			NC			NC			NC			NC			NC			NC			NC			NC			NC		
0° 30'	NC			NC			NC			NC			NC			NC			RC	96		RC	96		RC	96		0.022	101	
0° 45'	NC			NC			NC			NC			RC	96		RC	96		0.024	106		0.026	110		0.030	120		0.032	125	
1° 00'	NC			NC			NC			RC	90		0.022	101		0.026	110		0.030	120		0.034	130		0.038	139		0.042	149	300
1° 15'	NC			NC			RC	84		0.022	95		0.028	115		0.032	125		0.038	139		0.042	149		0.046	158	300	0.052	173	
1° 30'	NC			RC	78		0.022	88		0.028	108		0.032	125		0.038	139		0.044	154		0.050	168		0.056	182		0.062	197	
1° 45'	RC	72		RC	78		0.026	97		0.030	113		0.036	134		0.044	154		0.050	168	300	0.056	182	300	0.064	202		0.070	216	
2° 00'	RC	72		0.024	86		0.028	101		0.034	122		0.042	149		0.048	163		0.056	182		0.064	202		0.070	216		0.080	240	
2° 15'	RC	72		0.026	90		0.032	109		0.038	131		0.046	158		0.054	178	300	0.062	197		0.070	216		0.078	235		0.088	259	350
2° 30'	0.022	75		0.028	94		0.034	113		0.042	140		0.050	168		0.058	187		0.068	211		0.076	230		0.086	254	350	0.096	278	
2° 45'	0.024	79		0.030	98		0.038	122		0.046	149	200	0.054	178	250	0.064	202		0.072	221		0.082	245		0.092	269		0.100	288	400
3° 00'	0.026	83		0.034	105		0.040	126		0.050	158		0.058	187		0.068	211		0.078	235		0.088	259		0.098	283		D MAX = 2° 45'		
3° 15'	0.028	86		0.036	109		0.044	134	200	0.052	162		0.062	197		0.072	221		0.082	245		0.092	269		0.100	288	400			
3° 30'	0.030	90		0.038	113		0.046	139		0.056	171		0.066	206		0.076	230		0.086	254		0.096	278	350	D MAX = 3° 30'					
3° 45'	0.032	93		0.040	117		0.050	147		0.058	176		0.070	216		0.080	240		0.090	264		0.098	283							
4° 00'	0.034	97		0.042	121	200	0.052	151		0.062	185		0.072	221		0.084	250		0.094	274	350	0.100	288							
4° 15'	0.036	100		0.044	125		0.054	155		0.064	189		0.076	230		0.086	254		0.096	278		D MAX = 4° 15'								
4° 30'	0.036	100	200	0.046	129		0.056	160		0.068	198		0.078	235		0.090	264		0.098	283										
4° 45'	0.038	104		0.048	133		0.060	168		0.070	203		0.082	245		0.092	269	350	0.100	288										
5° 00'	0.040	108		0.050	137		0.062	172		0.072	207		0.084	250		0.094	274		D MAX = 5° 15'										
5° 30'	0.044	115		0.054	144		0.066	181		0.078	221	250	0.088	259		0.098	283													
6° 00'	0.046	119		0.058	152		0.070	189		0.082	230		0.092	269		0.100	288													
6° 30'	0.050	126		0.062	160		0.074	198		0.086	239		0.096	278	300	D MAX = 6° 30'														
7° 00'	0.052	130		0.064	164		0.078	206		0.090	248		0.098	283																
7° 30'	0.054	133		0.068	172		0.080	210		0.092	252	300	0.100	288																
8° 00'	0.058	140		0.070	176		0.084	219		0.094	257		D MAX = 8° 25'																	
8° 30'	0.060	144		0.072	179		0.086	223	250	0.096	261																			
9° 00'	0.062	148		0.076	187		0.088	227		0.098	266																			
9° 30'	0.064	151		0.078	191		0.092	235		0.100	270																			
10° 00'	0.066	155		0.080	195		0.094	240		D MAX = 10° 30'																				
11° 00'	0.070	162		0.084	203		0.096	244																						
12° 00'	0.074	169		0.088	211	250	0.098	248																						
13° 00'	0.076	173		0.090	215		0.100	252	300																					
14° 00'	0.080	180		0.094	222		D MAX = 13° 45'																							
15° 00'	0.082	184		0.096	226																									
16° 00'	0.086	191		0.098	230																									
17° 00'	0.088	194		0.100	234																									
18° 00'	0.090	198	250	D MAX = 19° 30'																										
19° 00'	0.092	202																												
20° 00'	0.094	205																												
21° 00'	0.096	209																												
22° 00'	0.096	209																												
23° 00'	0.098	212																												
24° 00'	0.098	212																												
25° 00'	0.100	216																												
D MAX = 28° 30'																														

ABBREVIATIONS

NC - NORMAL CROWN
RC - REVERSE CROWN, SUPERELEVATION AT NORMAL CROWN SLOPE
e - RATE OF SUPERELEVATION (FT. PER FT.)
Ls - LENGTH OF SUPERELEVATION TRANSITION (FT.)
L - DISTANCE FROM BEGINNING OF SUPERELEVATION TRANSITION TO ANY POINT (FT.)
d - WIDTH OF PAVEMENT (FT.) OR WIDTH OF SUBGRADE (FT.)
C - NORMAL CROWN (FT.)

GENERAL NOTES

1. ON PAVEMENT WITH TWO-WAY TRAFFIC, THE SUPERELEVATION SHALL BE REVOLVED ON THE INSIDE PAVEMENT EDGE UNLESS OTHERWISE NOTED ON THE PLANS
2. SUPERELEVATION VALUES SHOWN ON THE CROSS SECTIONS ARE VALUES (+) OR (-) TO BE ADDED TO OR SUBTRACTED FROM THE POINT OF CONTROL.
3. LENGTHS FOR L MAY BE ROUNDED IN MULTIPLES OF 25 FT. OR 50 FT. TO PERMIT SIMPLER CALCULATIONS.
4. PAVEMENTS WIDER THAN 2 LANES SHALL HAVE ADDITIONAL TRANSITION LENGTHS AS FOLLOWS:

3 LANE UNDIVIDED - - - - - +20%
4 LANE UNDIVIDED - - - - - +50%
5 LANE UNDIVIDED - - - - - +80%
6 LANE UNDIVIDED - - - - - +100%

NOTE: MAINTAIN NORMAL CROWN ON INSIDE UNTIL SUPERELEVATION EXCEEDS 2C.

RATE OF SUPERELEVATION SHALL BE COMPUTED ON STRAIGHT LINE METHOD USING APPLICABLE Ls.

SUPERELEVATION FORMULA $= \frac{Lde}{Ls}$

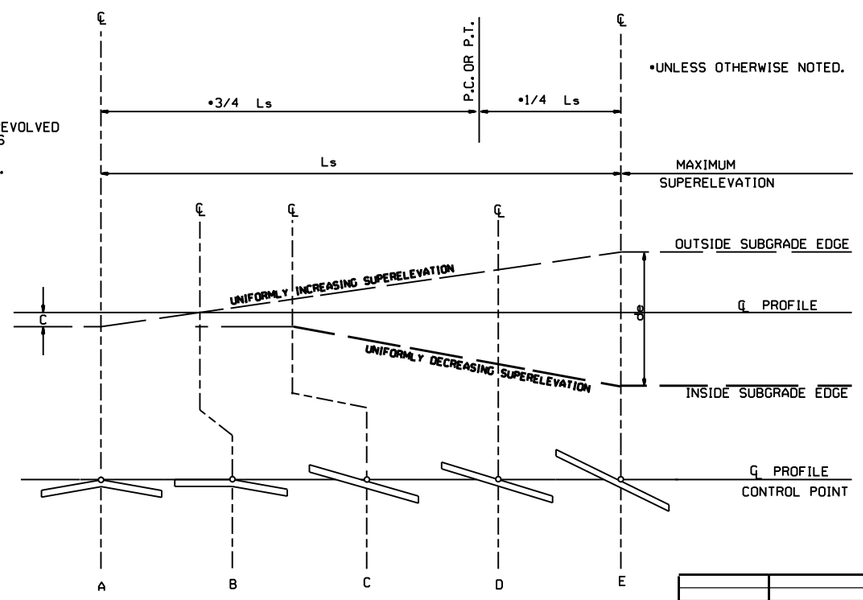

STANDARD METHOD WHEN SUPERELEVATION REVOLVES AROUND CENTER LINE

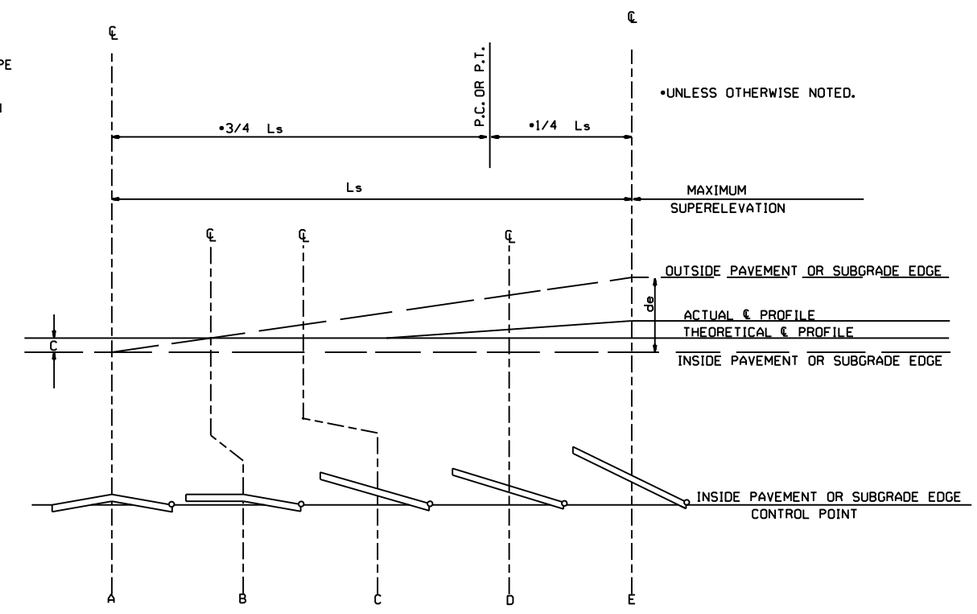

STANDARD METHOD WHEN SUPERELEVATION REVOLVES AROUND INNER SUBGRADE POINT OR INNER PAVEMENT EDGE

NOTE: MAINTAIN NORMAL CROWN ON INSIDE UNTIL SUPERELEVATION EXCEEDS 2C.

DATE	REVISION	DATE FILMED
11-07-19	REVISED SUPERELEVATION TABLE	
10-18-96	ADDED FORMULA	
01-09-87	ISSUED	534-1-9-87

ARKANSAS STATE HIGHWAY COMMISSION

TABLES AND METHOD OF SUPERELEVATION FOR TWO-WAY TRAFFIC

STANDARD DRAWING SE-2

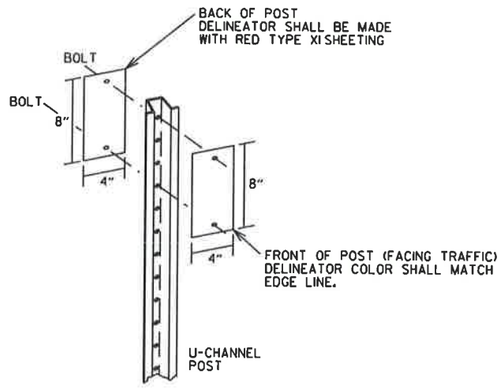

TYPE 2 DELINEATOR DETAILS

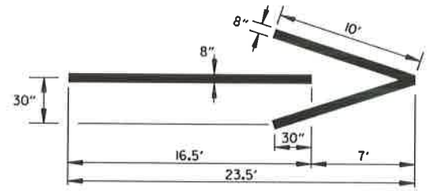

THERMOPLASTIC WRONG-WAY
PAVEMENT ARROWS

NOTE: THERMOPLASTIC WRONG-WAY PAVEMENT ARROWS TO BE PAID FOR AS THERMOPLASTIC PAVEMENT MARKING (ARROWS).

LEGEND

DELINEATOR

NOTE: WHEN UNIFORM SPACING IS INTERRUPTED BY ROADSIDE OBSTACLES, DELINEATORS ADJACENT TO THE ROADSIDE OBSTACLES MAY BE RELOCATED IN EITHER DIRECTION FOR A DISTANCE NOT EXCEEDING ONE QUARTER OF THE UNIFORM SPACING OR MAY BE ELIMINATED AS DIRECTED BY THE ENGINEER.

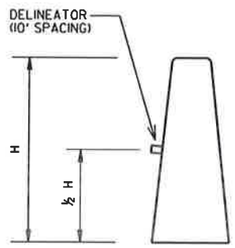

PERMANENT BARRIER WALL
DELINEATOR DETAIL

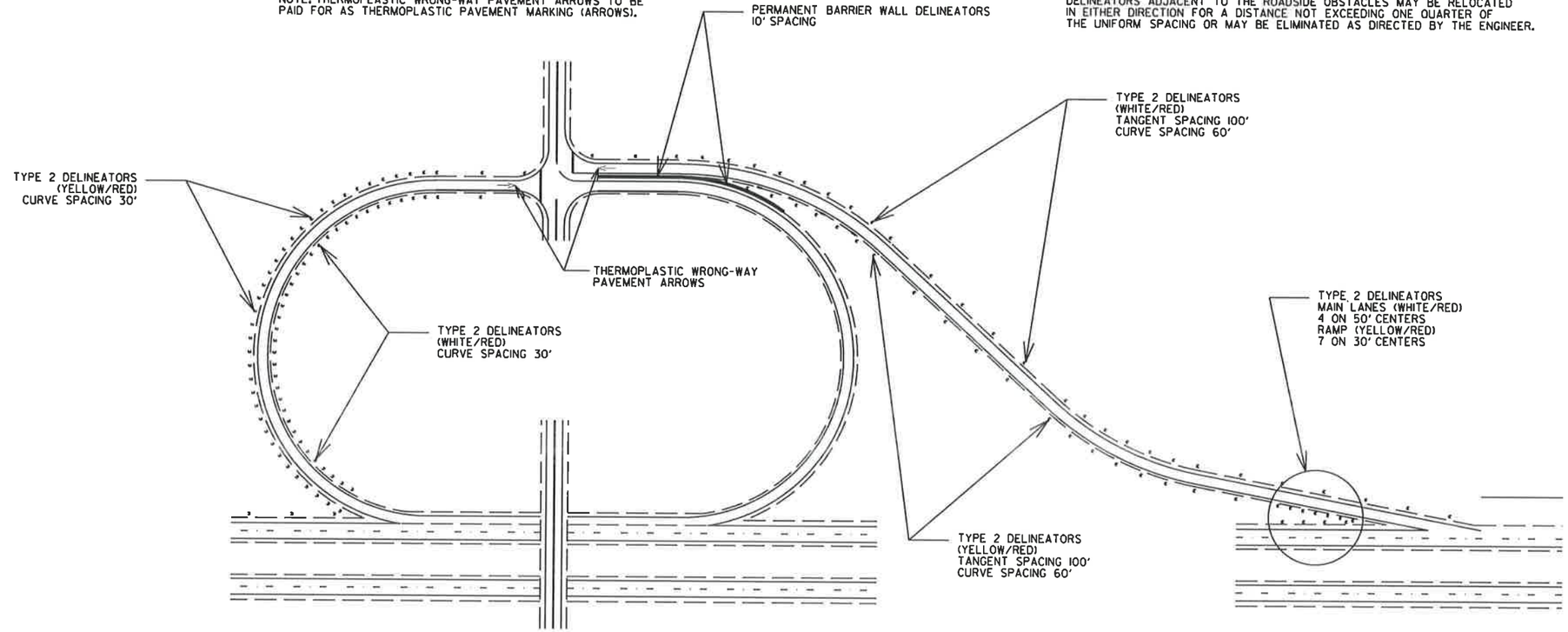

TYPICAL EXIT RAMP DELINEATOR PLACEMENT

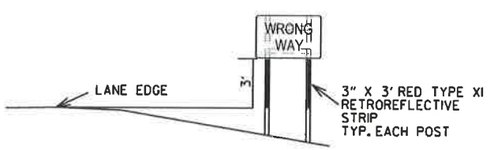

WRONG-WAY SIGN ASSEMBLY DETAILS

NOTES
1. WRONG-WAY SIGNS MAY BE MOUNTED ON THE BACK SIDE OF EXISTING SIGN SUPPORTS WHERE POSSIBLE.
2. WRONG-WAY SIGNS ARE NORMALLY GATED, BUT MAY BE OFFSET WHEN BARRIER WALLS ARE PRESENT ON THE INSIDE SHOULDER. IN SUCH CASES, THE SIGN ON THE INSIDE SHOULDER SIDE MAY BE LOCATED PAST THE END OF THE BARRIER WALL. IN RARE CASES WHERE THE BARRIER WALL EXTENDS TO OR NEAR THE MAIN LANES, BOTH SIGNS MAY BE LOCATED ON THE OUTSIDE SHOULDER SIDE OF THE RAMP, WITH APPROXIMATELY 300' SPACING BETWEEN THE SIGNS.

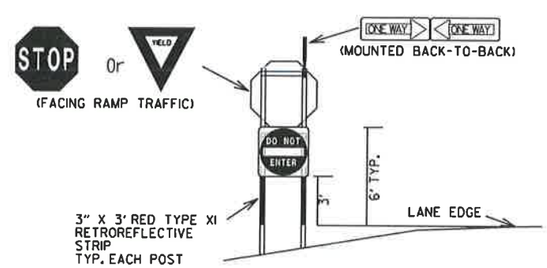

RAMP INTERSECTION SIGN ASSEMBLY DETAILS

THE DELINEATORS SHALL BE PLACED AT A 4' HEIGHT MEASURED FROM THE PAVEMENT EDGE TO THE BOTTOM OF THE DELINEATOR. DELINEATOR POSTS SHALL BE PLACED 2 TO 8 FT. OUTSIDE THE OUTER EDGE OF THE SHOULDER, OR IF APPROPRIATE, IN LINE WITH THE ROADSIDE BARRIER THAT IS 8 FT. OR LESS OUTSIDE THE OUTER EDGE OF THE SHOULDER.

DELINEATOR SPACING IN CURVES SHALL BE REDUCED TO 30' WHEN THE RAMP ADVISORY SPEED IS 30 MPH OR LESS.

IF MULTIPLE LANES EXIST AT THE RAMP TERMINAL, THE THERMOPLASTIC WRONG-WAY ARROW SHALL BE PLACED AS CLOSE TO THE RAMP TERMINAL TURNOUT AS POSSIBLE.

DATE	REVISION	FILMED
11-16-17	ADDED NOTES	
06-01-17	RE-DRAWN	
09-12-13	ISSUED AS STANDARD DRAWING	

ARKANSAS STATE HIGHWAY COMMISSION

TYPICAL EXIT RAMP SIGN AND DELINEATOR DETAILS

STANDARD DRAWING SHS-8

R1-1

STANDARD 30"X30"
EXPRESSWAY 36"X36"
SPECIAL 48"X48"

R1-2

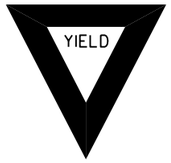

STD. 36"X36"X36"
EXPWY. 48"X48"X48"
FWY. 60"X60"X60"

R2-1

STD. 24"X30"
EXPWY. 36"X48"
FWY. 48"X60"

W3-5

STD. 36"X36"
EXPWY. 48"X48"
FWY. 48"X48"

W3-5a

STD. 36"X36"
EXPWY. 48"X48"
FWY. 48"X48"

R4-1

STD. 24"X30"
EXPWY. 36"X48"
FWY. 48"X60"

R4-2

STD. 24"X30"
EXPWY. 36"X48"
FWY. 48"X60"

R5-1

STD. 30"X30"
EXPWY. 36"X36"
SPECIAL 48"X48"

R11-2

48"X30"

R11-3A

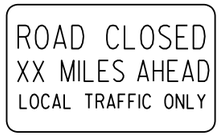

60"X30"

R11-4

60"X30"

W21-5a

STD. 36"X36"
FWY. 48"X48"

W1-1

STD. 36"X36"
FWY. 48"X48"

W1-2

STD. 36"X36"
FWY. 48"X48"

W1-3

STD. 48"X48"

W1-4

STD. 48"X48"

W1-6

STD. 48"X24"
SPECIAL 60"X30"

W1-8

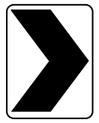

STD. 18"X24"
SPECIAL 24"X30"
EXPWY. 30"X36"
FWY. 36"X48"

W3-1

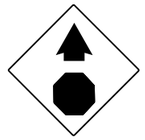

STD. 36"X36"
SPECIAL 48"X48"

W3-2

STD. 36"X36"
SPECIAL 48"X48"

W4-2

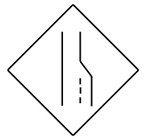

STD. 36"X36"
FWY. 48"X48"

W5-1

STD. 36"X36"
SPECIAL 48"X48"

W6-3

EXPWY. 36"X36"
SPECIAL 48"X48"

W8-7

EXPWY. 36"X36"
FWY. 48"X48"

W9-2

STD. 36"X36"
FWY. 48"X48"

W13-1

STD. 24"X24"

W20-1

STD. 48"X48"

W20-2

STD. 48"X48"

W20-3

STD. 48"X48"

W20-4

STD. 48"X48"

W20-5

STD. 48"X48"

W20-7a

STD. 36"X36"
FWY. 48"X48"

W21-2

STD. 30"X30"
SPECIAL 36"X36"

W21-5

STD. 30"X30"
SPECIAL 36"X36"

W24-1

STD. 36"X36"

W1-4b

STD. 48"X48"

R56-1

STD. 18"X18"

W8-11

STD. 36"X36"
FWY. 48"X48"

W8-9

STD. 36"X36"
FWY. 48"X48"

G20-1

60"X24"

G20-2

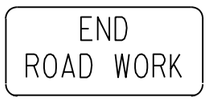

48"X24"

OM-3L OM-3R

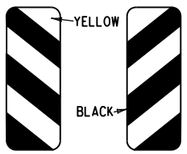

12"X36"

M4-9

STD. 30"X24"
SPECIAL 48"X36"
SPECIAL 60"X48"

M4-10

48"X18"

R55-1

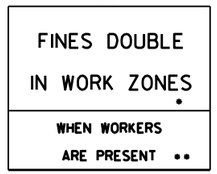

36"X60"

• USE 6" C LETTERS
•• USE 4" D LETTERS

ADVANCE DISTANCES
(XXXX)

500 FT	½ MILE
1000 FT	¾ MILE
1500 FT	1 MILE AHEAD

GENERAL NOTES:

1. ALL TRAFFIC CONTROL DEVICES USED ON ROAD CONSTRUCTION SHALL CONFORM TO THE MANUAL ON UNIFORM TRAFFIC CONTROL DEVICES, LATEST EDITION, AND TO THE STANDARD HIGHWAY SIGNS, LATEST EDITION, OR AS APPROVED BY THE FEDERAL HIGHWAY ADMINISTRATION.

2. TRAFFIC CONTROL DEVICES SHALL BE SET UP JUST BEFORE THE START OF CONSTRUCTION OPERATIONS AND SHALL BE PROPERLY MAINTAINED DURING THE TIME SUCH CONDITIONS EXIST. THEY SHALL REMAIN IN PLACE ONLY AS LONG AS NEEDED AND REMOVED THEREAFTER.

3. EXISTING SIGNS AND CONSTRUCTION SIGNS SHALL BE KEPT IN PROPER POSITION, AND BE CLEAN AND LEGIBLE AT ALL TIMES. SIGNS THAT DO NOT APPLY TO EXISTING CONDITIONS SHALL BE REMOVED. SIGNS THAT ARE DAMAGED, DEFACED, OR THAT ACCUMULATE DIRT DURING CONSTRUCTION SHALL BE CLEANED, REPAIRED, OR REPLACED.

• 4. SIGNS ARE USUALLY MOUNTED ON A SINGLE POST, ALTHOUGH THOSE WIDER THAN 36" OR LARGER THAN 10 SQ. FT. SHALL BE MOUNTED ON TWO POSTS OR ABOVE A TYPE III BARRICADE.

• 5. SIGN POSTS DIRECT BURIED IN SOIL SHALL BE 2 LB. MINIMUM CHANNEL POST OR 4"x4" WOOD POSTS. CHANNEL POSTS SHALL BE PAINTED GREEN. WOOD POSTS SHALL BE PAINTED WHITE. ALL POSTS SHALL BE NEATLY CONSTRUCTED, AND SHALL BE REPLUMBED, CLEANED, OR REPAIRED AS NEEDED FOR THE DURATION OF THE JOB. THERE SHALL NOT BE MORE THAN 2 POSTS IN A 7' PATH FOR WOOD OR CHANNEL POSTS. ANY CHANNEL POST SPLICE SHALL BE IN ACCORDANCE WITH STANDARD DRAWING TC-3.

6. POST MOUNTED SIGNS IN RURAL AREAS SHALL BE CONSTRUCTED WITH THE NEAR EDGE OF THE SIGN FROM 6 TO 12 FEET FROM THE PAVEMENT EDGE. SIGNS IN URBAN AREAS AND BARRICADE MOUNTED SIGNS SHALL BE MOUNTED A MINIMUM OF 2 FEET FROM THE PAVEMENT EDGE.

7. ALL POST AND BARRICADE MOUNTED SIGNS MOUNTED IN URBAN AREAS SHALL BE MOUNTED A MINIMUM DISTANCE OF 7' FROM THE BOTTOM OF THE SIGN TO THE ROADWAY SURFACE. ALL POST AND BARRICADE MOUNTED SIGNS MOUNTED IN RURAL AREAS SHALL BE MOUNTED A MINIMUM DISTANCE OF 7' FROM THE BOTTOM OF THE SIGN TO THE ROADWAY SURFACE, EXCEPT A MINIMUM OF 6' SHALL BE USED WHEN MOUNTING AN ADVISORY SIGN BELOW A WARNING SIGN. TEMPORARY SIGNS MAY BE MOUNTED ON PORTABLE SUPPORTS FOR INTERMEDIATE TERM STATIONARY WORK CONDITIONS. THE SIGNS MINIMUM MOUNTING HEIGHT SHALL BE 5'. RETROREFLECTIVE DEVICES SHALL BE USED. TEMPORARY SIGNS MAY BE MOUNTED ON PORTABLE SUPPORTS FOR SHORT-TERM, SHORT DURATION, AND MOBILE CONDITIONS. THEY SHALL BE NO LESS THAN ONE (1) FOOT ABOVE THE TRAVELED WAY. LONG-TERM STATIONARY SIGNS SHALL BE DIRECT BURIED IN SOIL, UNLESS CONDITIONS NECESSITATE THE USE OF PORTABLE SIGNS, OR AS APPROVED BY THE ENGINEER. CONCRETE PADS, CONCRETE OR ROCK BALLAST, OR OTHER SOLID MATERIALS SHALL NOT BE UTILIZED WITH PORTABLE SIGN SUPPORTS.

8. FLAGGERS SHALL USE REFLECTORIZED STOP-SLOW PADDLES. FLAGS MAY BE USED ONLY FOR EMERGENCY SITUATIONS.

9. MOST OF THE SIGNS SHOWN ARE ORIENTED TO THE RIGHT. HOWEVER, THIS DOES NOT PRECLUDE THE USE OF MIRROR IMAGES OF THESE SIGNS WHERE THE REVERSE ORIENTATION MIGHT BETTER CONVEY TO MOTORISTS THE PROPER DIRECTION OF MOVEMENT.

10. R55-1 SIGNS SHALL BE PLACED AT LEAST 1500' BUT NOT MORE THAN 1 MILE IN ADVANCE OF THE WORK ZONE. IF A SPEED LIMIT REDUCTION IS IN EFFECT, THE SIGN SHALL BE PLACED A MINIMUM OF 500' IN ADVANCE OF THE "REDUCED SPEED AHEAD" SIGN.

• NOTE: SUPPORTS FOR SIGNS, BARRICADES, AND VERTICAL PANELS THAT ARE DIFFERENT FROM THE REQUIREMENTS SHOWN IN NOTES 4 & 5, BUT MEET THE REQUIREMENTS OF MANUAL FOR ASSESSING SAFETY HARDWARE (MASH), WILL BE ACCEPTED. COMPLIANCE WITH THE REQUIREMENTS OF MANUAL FOR ASSESSING SAFETY HARDWARE (MASH) IS REQUIRED FOR ALL PROJECTS.

DATE	REVISION	FILMED
11-07-19	REVISED FOR MASH	
4-13-17	DELETED RSP-1 & ADDED W21-5a	
9-2-15	REVISED REDUCED SPEED LIMIT AHEAD SIGNS REVISED ROAD WORK NEXT XX MILES	
12-15-11	REVISED W24-1	
11-17-10	DELETED W8-9a & ADDED W8-9	
10-15-09	ADDED REFERENCE TO MASH & ADDED SIGN W24-1	
4-17-08	REVISED SIGN DESIGNATIONS	
11-18-04	REVISED NOTES	
10-9-03	REVISED NOTE 1	
11-16-01	REVISED NOTE 7	
9-28-00	REVISED NOTE	
11-18-98	ADDED NOTE	
6-26-97	REVISED NOTE 5	
4-03-97	REVISED NOTE 5	
10-18-96	ADDED CONTROLLED ACCESS HWY. SIGN & TO NOTE 7	
10-12-95	ADDED R55-1	
6-8-95	REVISED TO CORRECT SIGN ILLUSTRATIONS	6-8-95
2-2-95	REVISED PER PART VI, MUTCD SEPT. 3, 1993	
8-15-91	DRAWN AND PLACED IN USE	

ARKANSAS STATE HIGHWAY COMMISSION

STANDARD TRAFFIC CONTROLS FOR HIGHWAY CONSTRUCTION

STANDARD DRAWING TC-1

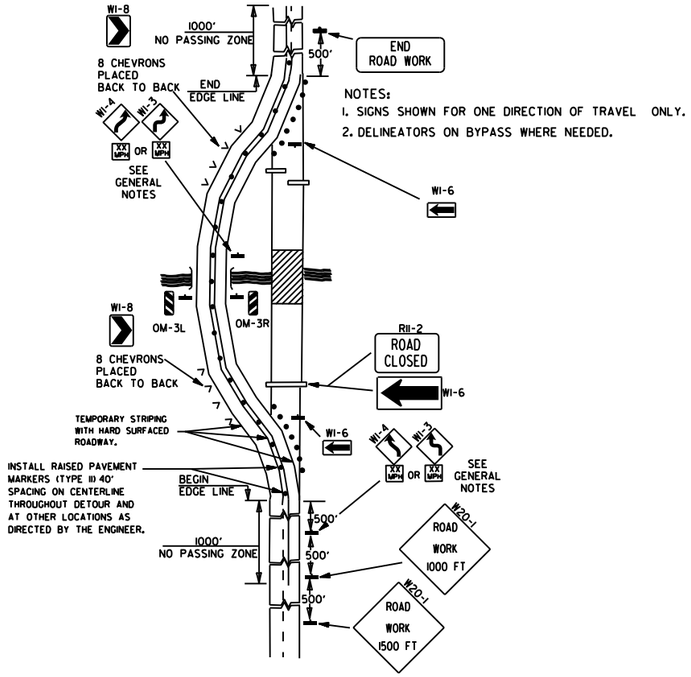

NOTES:
1. SIGNS SHOWN FOR ONE DIRECTION OF TRAVEL ONLY.
2. DELINEATORS ON BYPASS WHERE NEEDED.

(A) TYPICAL APPLICATION OF TRAFFIC CONTROL DEVICES ON A 2-LANE HIGHWAY WHERE THE ENTIRE ROADWAY IS CLOSED AND A BYPASS DETOUR IS PROVIDED.

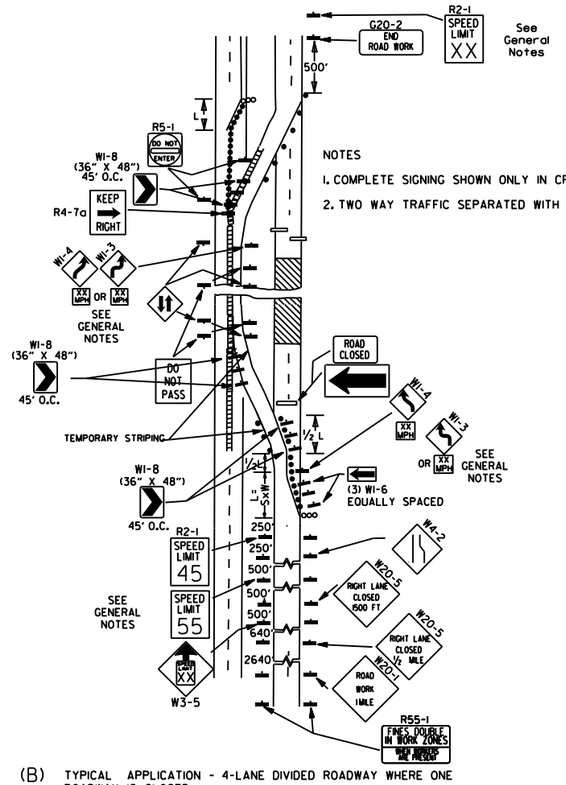

NOTES
1. COMPLETE SIGNING SHOWN ONLY IN CROSSOVER DIRECTION.
2. TWO WAY TRAFFIC SEPARATED WITH POSITIVE BARRIER.

(B) TYPICAL APPLICATION - 4-LANE DIVIDED ROADWAY WHERE ONE ROADWAY IS CLOSED.

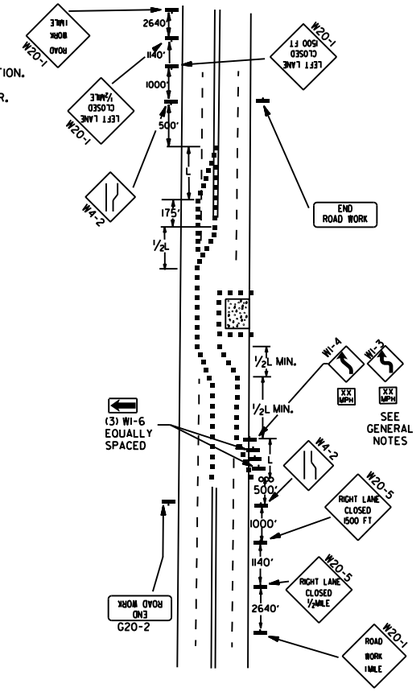

(C) TYPICAL APPLICATION - 4-LANE UNDIVIDED ROADWAY WHERE HALF OF THE ROADWAY IS CLOSED.

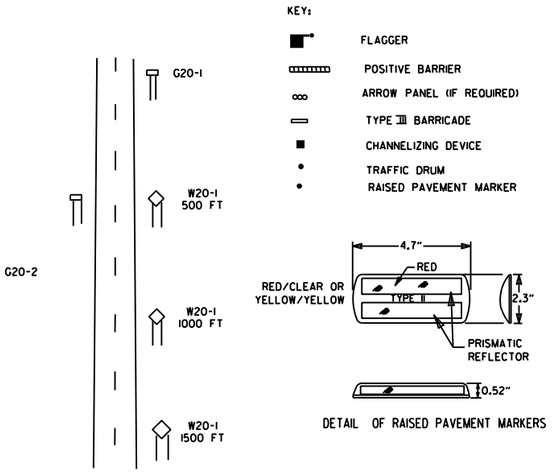

TYPICAL ADVANCE WARNING SIGN PLACEMENT

TAPER FORMULAE:

$L = SXW$ FOR SPEEDS OF 45MPH OR MORE.

$L = \frac{WS^2}{60}$ FOR SPEEDS OF 40MPH OR LESS.

WHERE:

L= MINIMUM LENGTH OF TAPER.

S= NUMERICAL VALUE OF POSTED SPEED LIMIT PRIOR TO WORK OR 85TH PERCENTILE SPEED.

W= WIDTH OF OFFSET.

GENERAL NOTES:

1. THE MAINTENANCE DIVISION SHALL CONDUCT A BALL BANK STUDY TO DETERMINE THE ADVISORY SPEED LIMIT PRIOR TO OPENING TO TRAFFIC. THE ADVISORY SPEED WILL BE POSTED ON W1-3 OR W1-4 CURVE WARNING SIGNS. USE W1-4 WHEN SPEED IS GREATER THAN 30MPH AND W1-3 WHEN 30MPH OR LESS
2. WHEN THE EXISTING SPEED LIMIT IS 55MPH AND THE PLANS REQUIRE A SPEED LIMIT OF 45MPH, THE R2-1(55) SHALL BE OMITTED AND THE W3-5 SHALL BE INSTALLED AT THAT LOCATION. ADDITIONAL R2-1 45MPH SPEED LIMIT SIGNS SHALL BE INSTALLED AT A MAXIMUM OF 1MILE INTERVALS. AT THE END OF THE WORK AREA A R2-1(XX) SHALL BE INSTALLED TO MATCH ORIGINAL SPEED LIMIT.
3. WHEN THE EXISTING SPEED LIMIT IS 65MPH AND THE PLANS REQUIRE A SPEED LIMIT OF 55MPH, THE R2-1(45) SHALL BE OMITTED. ADDITIONAL R2-1 55MPH SPEED LIMIT SIGNS SHALL BE INSTALLED AT A MAXIMUM OF 1MILE INTERVALS. AT THE END OF THE WORK AREA A R2-1(XX) SHALL BE INSTALLED TO MATCH ORIGINAL SPEED LIMIT.
4. THE MAXIMUM SPACING BETWEEN CHANNELIZING DEVICES IN A TAPER SHOULD BE APPROXIMATELY EQUAL IN FEET TO THE SPEED LIMIT. BEYOND THE TAPER, MAXIMUM SPACING SHALL BE TWO TIMES THE SPEED LIMIT, OR AS DIRECTED BY THE ENGINEER.
5. WARNING LIGHTS AND/OR FLAGS MAY BE MOUNTED TO SIGNS OR CHANNELIZING DEVICES AT NIGHT AS NEEDED.
6. PAVEMENT MARKINGS NO LONGER APPLICABLE WHICH MIGHT CREATE CONFUSION IN THE MINDS OF VEHICLE OPERATORS SHALL BE REMOVED OR OBLITERATED AS SOON AS PRACTICABLE.
7. TRAILER MOUNTED DEVICES SUCH AS ARROW PANELS AND PORTABLE CHANGEABLE MESSAGE SIGNS SHALL BE DELINEATED BY AFFIXING CONSPICUITY MATERIAL IN A CONTINUOUS LINE ON THE FACE OF THE TRAILER. WHEN PLACED ON OR ADJACENT TO THE SHOULDER AND NOT BEHIND A POSITIVE BARRIER, THESE DEVICES SHALL BE DELINEATED BY PLACING FIVE (5) TRAFFIC DRUMS, EQUALLY SPACED ALONG THE TRAFFIC SIDE OF THE DEVICE. PAYMENT FOR TRAFFIC DRUMS SHALL BE CONSIDERED INCLUDED IN THE PRICE BID FOR VARIOUS TRAILER MOUNTED DEVICES.
8. DIMENSIONS SHOWN FOR RAISED PAVEMENT MARKERS ARE TYPICAL. THE CONTRACTOR MAY SUBSTITUTE SIMILAR MARKERS WITH THE APPROVAL OF THE ENGINEER. REQUESTING APPROVAL FOR SIMILAR MARKERS MAY BE MADE BY REFERRING TO THE ARDOT QUALIFIED PRODUCTS LIST.
9. ALL TRAILER MOUNTED DEVICES SUCH AS ARROW PANELS AND PORTABLE CHANGEABLE MESSAGE SIGNS SHALL MEET THE REQUIREMENTS OF THE MANUAL FOR ASSESSING SAFETY HARDWARE (MASH).

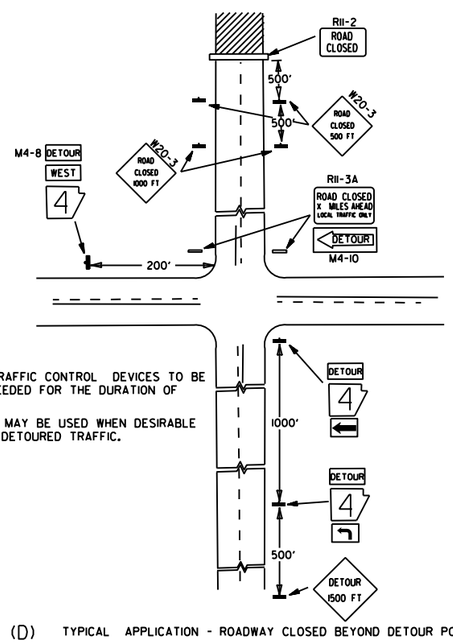

NOTES:
1. REGULATORY TRAFFIC CONTROL DEVICES TO BE MODIFIED AS NEEDED FOR THE DURATION OF THE DETOUR.
2. STREET NAMES MAY BE USED WHEN DESIRABLE FOR DIRECTING DETOURED TRAFFIC.

(D) TYPICAL APPLICATION - ROADWAY CLOSED BEYOND DETOUR POINT.

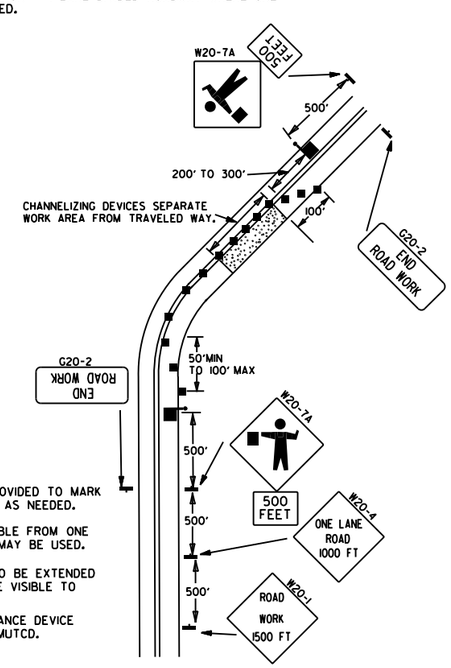

NOTES:
1. FLOOD LIGHTS SHOULD BE PROVIDED TO MARK FLAGGER STATIONS AT NIGHT AS NEEDED.
2. IF ENTIRE WORK AREA IS VISIBLE FROM ONE STATION, A SINGLE FLAGGER MAY BE USED.
3. CHANNELIZING DEVICES ARE TO BE EXTENDED TO A POINT WHERE THEY ARE VISIBLE TO APPROACHING TRAFFIC.
4. AUTOMATED FLAGGER ASSISTANCE DEVICE (AFAD) OPTIONAL. REFER TO MUTCD.

(E) TYPICAL APPLICATION OF TRAFFIC CONTROL DEVICES ON 2-LANE HIGHWAY WHERE ONE LANE IS CLOSED AND FLAGGING IS PROVIDED.

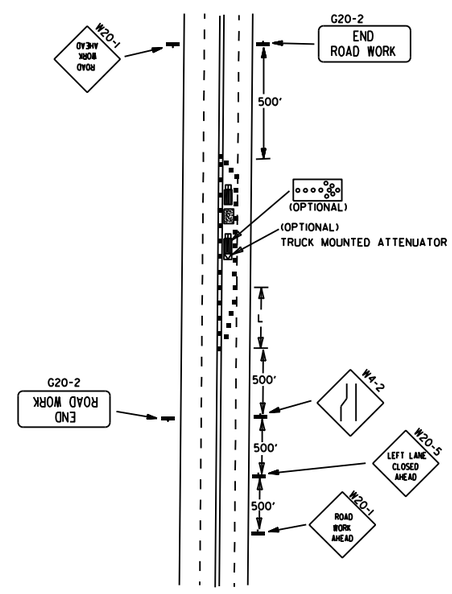

(F) TYPICAL APPLICATION - 4-LANE UNDIVIDED ROADWAY WITH INSIDE LANE CLOSED.

DATE	REVISION	FILMED
05-20-21	REVISED NOTE 7	
11-07-19	REVISED NOTE 1, ADDED NOTE 9	
9-2-15	REVISED NOTE 2, ADDED NOTE 8, REVISED DRAWING (A) & REPLACED R2-5A WITH W3-5	
9-12-13	REVISED DETAIL OF RAISED PAVEMENT MARKERS	
3-11-10	ADDED (AFAD)	
11-20-08	REVISED SIGN DESIGNATIONS	
11-18-04	ADDED GENERAL NOTE	
10-18-96	ADDED R55-1	
4-26-96	CORRECTED (c) BEHIND G20-2	
6-8-95	CORRECTED SIGN IDENT. ON W1-4A	6-8-95
2-2-95	REVISED PER PART VI, MUTCD, SEPT. 3, 1993	
8-15-91	DRAWN AND PLACED IN USE	

ARKANSAS STATE HIGHWAY COMMISSION

STANDARD TRAFFIC CONTROLS FOR HIGHWAY CONSTRUCTION

STANDARD DRAWING TC-2

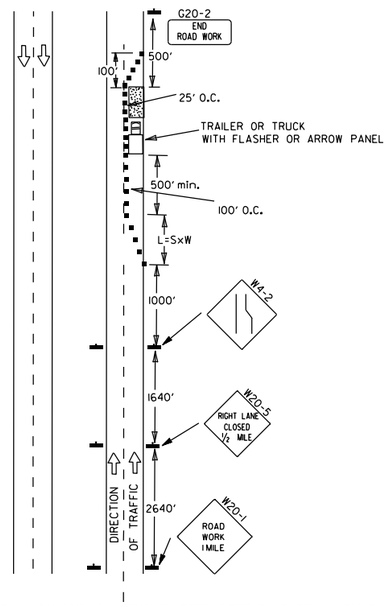

(A) TYPICAL APPLICATION - DAYTIME MAINTENANCE OPERATIONS OF SHORT DURATION ON A 4-LANE DIVIDED ROADWAY WHERE HALF OF THE ROADWAY IS CLOSED.

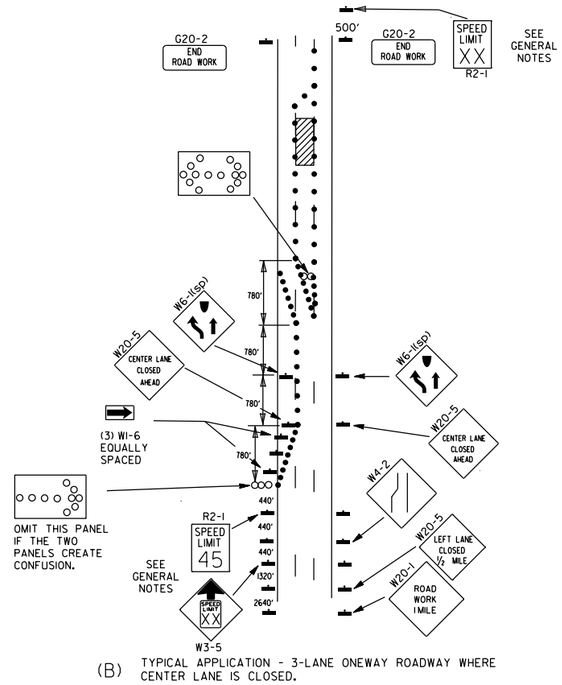

(B) TYPICAL APPLICATION - 3-LANE ONEWAY ROADWAY WHERE CENTER LANE IS CLOSED.

KEY:

- ARROW PANEL (IF REQUIRED)
- ■ CHANNELIZING DEVICE
- ● TRAFFIC DRUM

GENERAL NOTES:

1. A SPEED LIMIT REDUCTION MAY BE IMPLEMENTED ONLY WHEN DESIGNATED IN THE PLAN OR WHEN RECOMMENDED BY THE ROADWAY DESIGN DIVISION.
2. WHEN THE EXISTING SPEED LIMIT IS 55MPH AND THE PLANS REQUIRE A SPEED LIMIT OF 45MPH, THE R2-1(55) SHALL BE OMITTED AND THE W3-5 SHALL BE INSTALLED AT THAT LOCATION. ADDITIONAL R2-1 45MPH SPEED LIMIT SIGNS SHALL BE INSTALLED AT A MAXIMUM OF 1 MILE INTERVALS. AT THE END OF THE WORK AREA A R2-1(XX) SHALL BE INSTALLED TO MATCH ORIGINAL SPEED LIMIT.
3. WHEN THE EXISTING SPEED LIMIT IS 65MPH AND THE PLANS REQUIRE A SPEED LIMIT OF 55MPH, THE R2-1(45) SHALL BE OMITTED. ADDITIONAL R2-1 55MPH SPEED LIMIT SIGNS SHALL BE INSTALLED AT A MAXIMUM OF 1 MILE INTERVALS. AT THE END OF THE WORK AREA A R2-1(XX) SHALL BE INSTALLED TO MATCH ORIGINAL SPEED LIMIT.
4. THE MAXIMUM SPACING BETWEEN CHANNELIZING DEVICES IN A TAPER SHOULD BE APPROXIMATELY EQUAL IN FEET TO THE SPEED LIMIT. BEYOND THE TAPER, MAXIMUM SPACING SHALL BE TWO TIMES THE SPEED LIMIT OR AS DIRECTED BY THE ENGINEER.
5. WARNING LIGHTS AND/OR FLAGS MAY BE MOUNTED TO SIGNS OR CHANNELIZING DEVICES AT NIGHT AS NEEDED.
6. PAVEMENT MARKINGS NO LONGER APPLICABLE WHICH MIGHT CREATE CONFUSION IN THE MINDS OF VEHICLE OPERATORS SHALL BE REMOVED OR OBLITERATED AS SOON AS PRACTICABLE.
7. THE G20-1 SIGN WILL BE REQUIRED ON JOBS OF OVER TWO MILES IN LENGTH. WHEN THE LANE CLOSURE IS NOT AT THE BEGINNING OF THE PROJECT, THE G20-1 SIGN SHALL BE ERECTED 125' IN ADVANCE OF THE JOB LIMIT. ADDITIONAL W20-1 (1 MILE) SIGNS ARE NOT REQUIRED IN ADVANCE OF LANE CLOSURES THAT BEGIN INSIDE THE PROJECT LIMITS.
8. FLAGGERS SHALL USE STOP/SLOW PADDLES FOR CONTROLLING TRAFFIC THROUGH WORK ZONES. FLAGS MAY BE USED ONLY FOR EMERGENCY SITUATIONS.
9. ALL PLASTIC DRUMS AND CONES SHALL MEET THE REQUIREMENTS OF MANUAL FOR ASSESSING SAFETY HARDWARE (MASH).
10. TRAILER MOUNTED DEVICES SUCH AS ARROW PANELS AND PORTABLE CHANGEABLE MESSAGE SIGNS SHALL BE DELINEATED BY AFFIXING CONSPICUITY MATERIAL IN A CONTINUOUS LINE ON THE FACE OF THE TRAILER. WHEN PLACED ON OR ADJACENT TO THE SHOULDER AND NOT BEHIND A POSITIVE BARRIER, THESE DEVICES SHALL BE DELINEATED BY PLACING FIVE (5) TRAFFIC DRUMS, EQUALLY SPACED ALONG THE TRAFFIC SIDE OF THE DEVICE. PAYMENT FOR TRAFFIC DRUMS SHALL BE CONSIDERED INCLUDED IN THE PRICE BID FOR VARIOUS TRAILER MOUNTED DEVICES.
11. ALL TRAILER MOUNTED DEVICES SUCH AS ARROW PANELS AND PORTABLE CHANGEABLE MESSAGE SIGNS SHALL MEET THE REQUIREMENTS OF THE MANUAL FOR ASSESSING SAFETY HARDWARE (MASH).

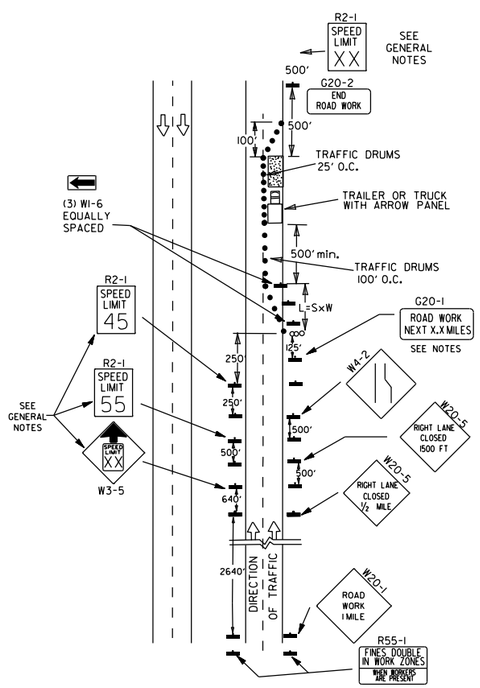

(C) TYPICAL APPLICATION - CONSTRUCTION OPERATIONS OF INTERMEDIATE TO LONG TERM DURATION ON A 4-LANE DIVIDED ROADWAY WHERE HALF OF THE ROADWAY IS CLOSED.

CHANNELIZING DEVICES

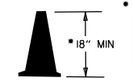

- WHEN CONES ARE USED ON FREEWAYS AND MULTI-LANE HIGHWAYS, THEY SHALL BE 28" MIN. DURING HOURS OF DARKNESS, 28" CONES SHALL BE USED ON ALL ROADWAYS, AND SHALL BE REFLECTORIZED IN ACCORDANCE WITH THE M.U.T.C.D.

CONES

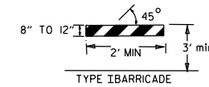

TYPE I BARRICADE

PLASTIC DRUM

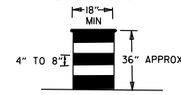

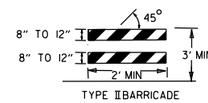

TYPE II BARRICADE

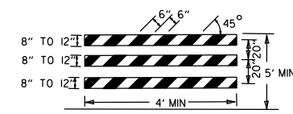

TYPE III BARRICADE

NOTE:
FOR ALL ROAD CLOSURES, THE TYPE III BARRICADES SHALL BE OF SUFFICIENT LENGTH TO EXTEND ACROSS ENTIRE ROADWAY.

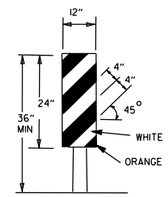

VERTICAL PANEL
VP-1R

VERTICAL PANEL PLACEMENT

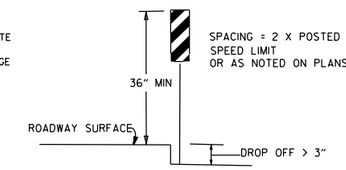

SPACING = 2 X POSTED SPEED LIMIT OR AS NOTED ON PLANS

FLAG

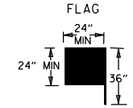

FLAG SHALL BE OF GOOD GRADE RED MATERIAL

TRAFFIC CONTROL DEVICES

NON-INTERSTATE			
VERTICAL DIFFERENTIAL	LOCATION	TRAFFIC CONTROL	
		≤ 45 MPH	> 45 MPH
≤ 1"	CENTERLINE	W8-11	W8-11
> 1" ≤ 3"	CENTERLINE	W8-11 AND CENTERLINE LANE STRIPING	W8-11 AND CENTERLINE LANE STRIPING
> 3"	CENTERLINE	STANDARD LANE CLOSURE(6)	STANDARD LANE CLOSURE(6)
≤ 3"	EDGE OF TRAVELED LANE OR EDGE OF SHOULDER	W8-9 AND TRAFFIC DRUMS(1)	W8-9 AND TRAFFIC DRUMS(1)
> 3" ≤ 6"	EDGE OF TRAVELED LANE OR EDGE OF SHOULDER	W8-17, EDGE LINE STRIPING, AND TRAFFIC DRUMS(1)	W8-17, EDGE LINE STRIPING, AND TRAFFIC DRUMS(1)
> 6" ≤ 18"	EDGE OF TRAVELED LANE OR EDGE OF SHOULDER	W8-17, EDGE LINE STRIPING, AND TRAFFIC DRUMS(1)	W8-17, EDGE LINE STRIPING, AND TRAFFIC DRUMS(2)
> 18" ≤ 24"	EDGE OF TRAVELED LANE OR EDGE OF SHOULDER	W8-17, EDGE LINE STRIPING, AND TRAFFIC DRUMS(1)	A STABILIZED WEDGE, W8-17, EDGE LINE STRIPING AND TRAFFIC DRUMS(3)
> 24"	EDGE OF TRAVELED LANE OR EDGE OF SHOULDER	PRECAST CONCRETE BARRIER(4) & EDGE LINES	PRECAST CONCRETE BARRIER(4) & EDGE LINES

INTERSTATE		
VERTICAL DIFFERENTIAL	LOCATION	TRAFFIC CONTROL
≤ 3"	CENTERLINE	W8-11 AND LANE STRIPING
≤ 3"	EDGE OF TRAVELED LANE OR EDGE OF SHOULDER	W8-9, EDGE LINE STRIPING, AND TRAFFIC DRUMS(2)
> 3" ≤ 6"	EDGE OF TRAVELED LANE OR EDGE OF SHOULDER	W8-17, EDGE LINE STRIPING, AND TRAFFIC DRUMS(2)
> 6"	EDGE OF TRAVELED LANE OR EDGE OF SHOULDER	PRECAST CONCRETE BARRIER & EDGE LINES

INTERSTATE AND NON-INTERSTATE		
FORESLOPE	HEIGHT	TRAFFIC CONTROL
1:1	> 2 FT	PRECAST CONCRETE BARRIER
2:1	≤ 5 FT	TRAFFIC DRUMS
2:1	> 5 FT	PRECAST CONCRETE BARRIER
Flatter than 2:1	N/A	TRAFFIC DRUMS

GENERAL NOTES:

1. WHEN THE SHOULDER AREA IS USED AS PART OF THE TRAVELED LANE AND THERE IS INSUFFICIENT WIDTH TO PLACE TRAFFIC DRUMS ON THE REMAINING SHOULDER WIDTH, THEN VERTICAL PANELS SHALL BE USED.
2. WHEN THERE IS INSUFFICIENT WIDTH TO PLACE TRAFFIC DRUMS ON THE REMAINING SHOULDER WIDTH, A STABILIZED WEDGE SHALL BE USED.
3. PRECAST CONCRETE BARRIER WALL CAN BE USED IN LIEU OF A STABILIZED WEDGE, W8-17 SIGN, EDGE LINE STRIPING, AND TRAFFIC DRUMS, IF AND WHERE DIRECTED BY THE ENGINEER.
4. A STABILIZED WEDGE, W8-17 SIGN, EDGE LINE STRIPING, AND TRAFFIC DRUMS CAN BE USED IN LIEU OF PRECAST CONCRETE BARRIER WALL, IF AND WHERE DIRECTED BY THE ENGINEER.
5. W21-5, W21-5a, AND/OR W21-5b SIGNS SHALL BE USED WHERE THE ROADWAY IS UNOBSTRUCTED IF AND WHERE DIRECTED BY THE ENGINEER.
6. TIME LIMITATIONS MUST CONFORM TO SECTION 603 OF THE STANDARD SPECIFICATIONS FOR HIGHWAY CONSTRUCTION (CURRENT EDITION).

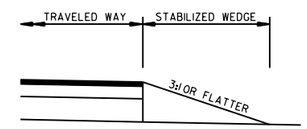

STABILIZED WEDGE

NOTE:
MATERIALS FOR THE STABILIZED WEDGE SHALL MEET THE REQUIREMENTS PROVIDED IN SECTION 603.02 OF THE STANDARD SPECIFICATIONS.

STOP SLOW PADDLE

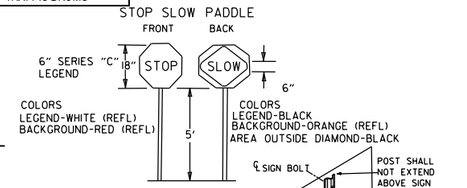

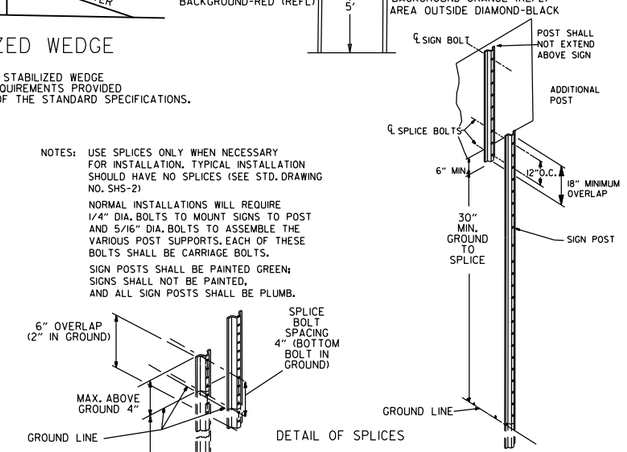

NOTES: USE SPLICES ONLY WHEN NECESSARY FOR INSTALLATION. TYPICAL INSTALLATION SHOULD HAVE NO SPLICES (SEE STD. DRAWING NO. SHS-21)

NORMAL INSTALLATIONS WILL REQUIRE 1/4" DIA. BOLTS TO MOUNT SIGNS TO POST AND 5/16" DIA. BOLTS TO ASSEMBLE THE VARIOUS POST SUPPORTS. EACH OF THESE BOLTS SHALL BE CARRIAGE BOLTS.

SIGN POSTS SHALL BE PAINTED GREEN; SIGNS SHALL NOT BE PAINTED, AND ALL SIGN POSTS SHALL BE PLUMB.

DETAIL OF SPLICES

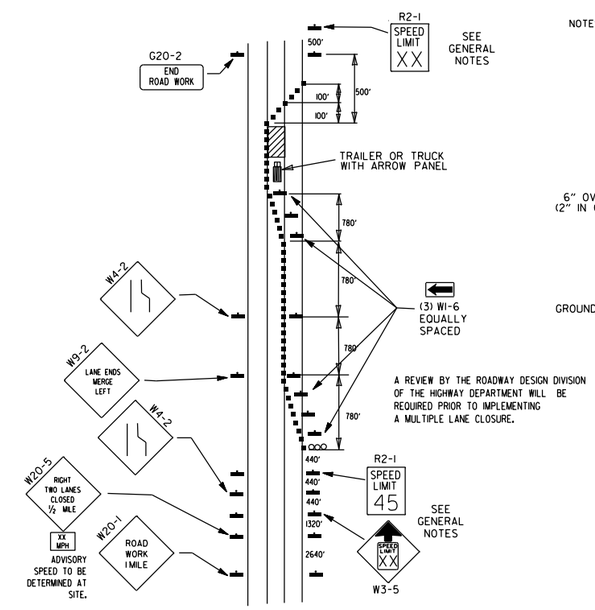

A REVIEW BY THE ROADWAY DESIGN DIVISION OF THE HIGHWAY DEPARTMENT WILL BE REQUIRED PRIOR TO IMPLEMENTING A MULTIPLE LANE CLOSURE.

(D) TYPICAL APPLICATION - CLOSING MULTIPLE LANES OF A MULTILANE HIGHWAY.

DATE	REVISION	FILMED
08-12-21	REVISED TRAFFIC CONTROL DEVICES AND NOTES	
05-20-21	REVISED NOTE 10	
2-27-20	REVISED TRAFFIC CONTROL DEVICES DETAILS	
11-07-19	REVISED NOTE 9, ADDED NOTE 11	
7-25-19	REVISED TRAFFIC CONTROL DEVICES DETAILS	
9-2-15	REVISED NOTE 2 & REPLACED R2-5A WITH W3-5	
10-15-09	ADDED REFERENCE TO MASH	
11-20-08	REVISED SIGN DESIGNATIONS	
11-18-04	ADDED NOTE	
10-1-98	ADDED NOTE	
4-03-97	ADDED (SP) TO W6-1& REVISED TRAFFIC CONTROL DEVICES NOTE	
10-18-96	ADDED R55-1	
10-12-95	MOVED UPPER SPLICE	
6-8-95	REVISED SPLICE DETAIL, TEXT	6-8-95
2-2-95	REVISED PER PART VI, MUTCD, SEPT. 3, 1993	
8-15-91	DRAWN AND PLACED IN USE	

ARKANSAS STATE HIGHWAY COMMISSION

STANDARD TRAFFIC CONTROLS FOR HIGHWAY CONSTRUCTION

STANDARD DRAWING TC-3

REINFORCING BAR TABLE PER BARRIER UNIT

MARK	LOCATION	BAR SIZE	(NO. BARS)	SKETCH
H-1	HORIZONTAL IN BARRIER TIED INSIDE V-1 BARS	#5	(6)	19'-3"
H-2	CENTERED ABOVE DRAIN SLOTS LONG. & TRANSVERSELY	#5	(6)	6'-6"
H-3	TIED ABOVE H-1 BARS TO SUPPORT H-2, TIED TO V-1	#4	(2)	1'-6"
S-1	OVER LIFT HOLES	#4	(2)	2'-5", 90°, 3 3/8" R, LIFTING HOLE
S-2	HORIZ. AROUND SLOTS BETWEEN V-1'S @ DRAIN SLOTS	#4	(2)	1 1/2" R, SLOTS, 7", 1'-6", 1" MIN. CLEAR TO BAR; 5'-1" BAR W/(4) 1 1/2" R BENDS & MIN. 1'-0" OVERLAP
V-1	VERTICAL IN BARRIER(3) EACH END & (2) AT EACH DRAIN SLOTS	#5	(16)	TOTAL LENGTH 4'-9"; 2 3/16" R, 12°, 1 1/2", 9", 2'-1 3/8", 4 3/8"

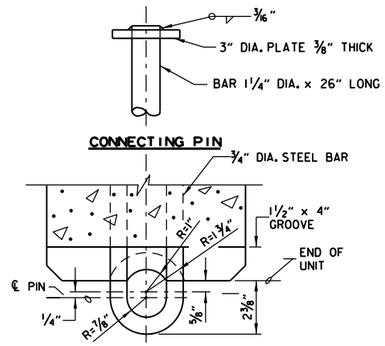

CONNECTION DETAILS

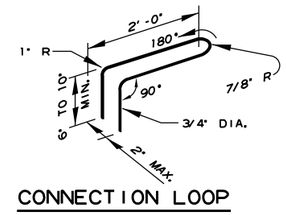

CONNECTION LOOP

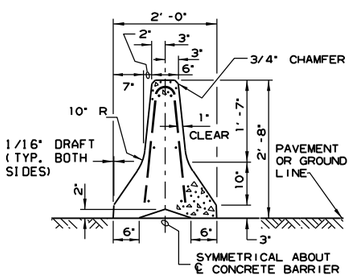

SECTION A-A

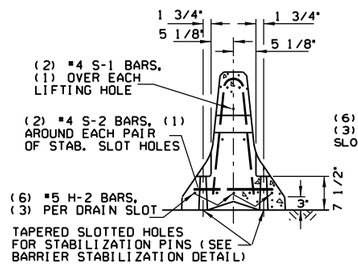

SECTION B-B

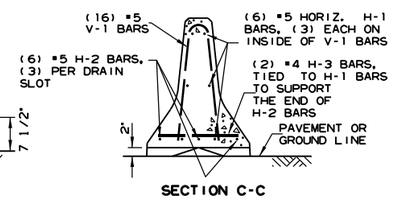

SECTION C-C

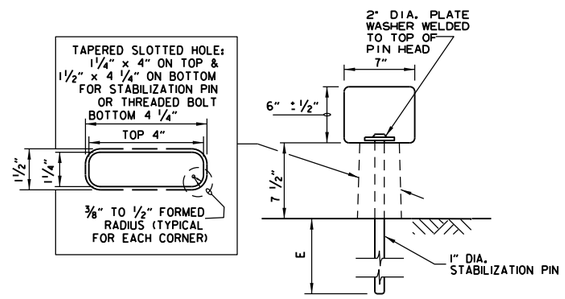

BARRIER STABILIZATION DETAIL

ROADWAY SECTION

(E) 4" - CONCRETE PAVEMENT
8" - ASPHALT PAVEMENT
12" - SHOULDER AREAS

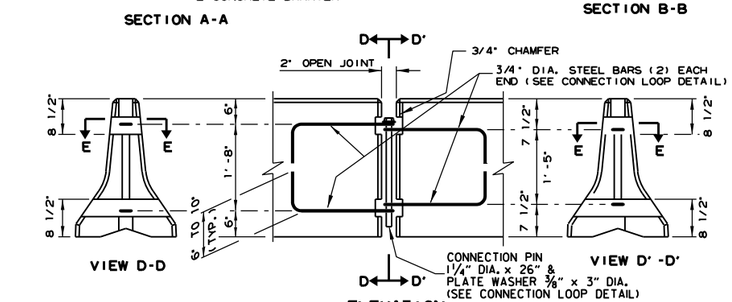

ELEVATION

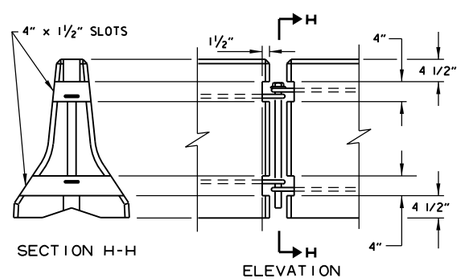

BARRIER REMOVAL SLOT DETAILS

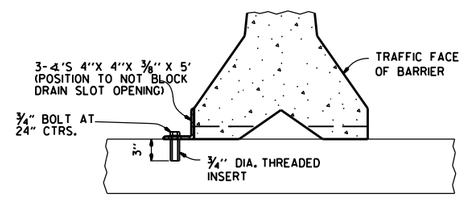

NOTE: " THREADED INSERTS SHALL BE CAST IN PLACE FOR ALL NEW BRIDGE DECKS AND DRILLED AND GROUTED FOR EXISTING BRIDGE DECKS. INSERTS SHALL HAVE A MINIMUM ULTIMATE LOAD CAPACITY OF 8000 LBS. IN TENSION. AFTER REMOVAL OF BARRIER, BOLTS, AND ANGLES, THE INSERTS SHALL BE FILLED WITH APPROVED NON-SHRINK EPOXY.

BARRIER STABILIZATION DETAIL

BRIDGE DECKS

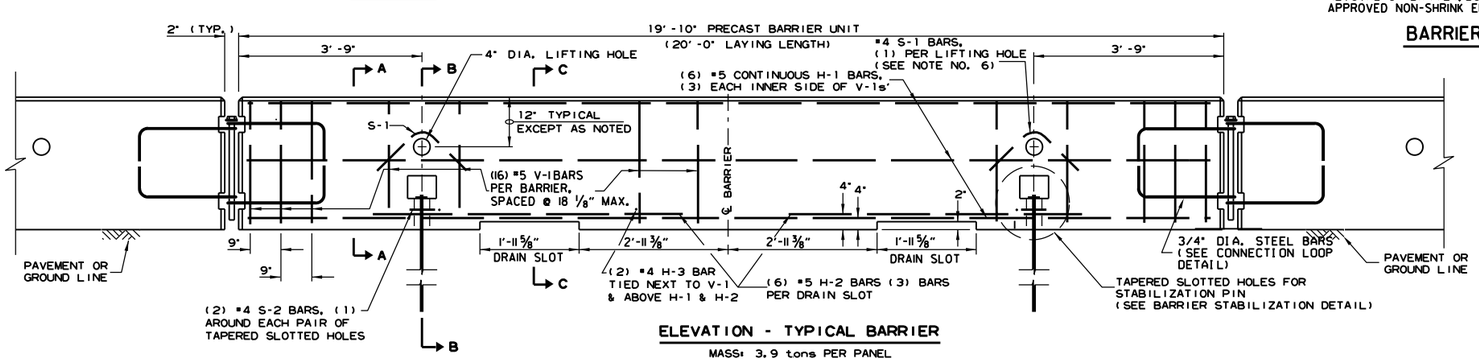

ELEVATION - TYPICAL BARRIER

MASS: 3.9 tons PER PANEL

GENERAL NOTES

1. THE CONTRACTOR SHALL FURNISH THE PRECAST CONCRETE BARRIER UNITS AND SHALL BE RESPONSIBLE FOR THE MANUFACTURE, SHIPMENT, STORAGE, PLACEMENT AND REMOVAL. AT THE COMPLETION OF THE PROJECT, THE PRECAST UNITS WILL REMAIN THE PROPERTY OF THE CONTRACTOR.

2. MATERIALS SHALL MEET THE FOLLOWING MINIMUM REQUIREMENTS:
   CONCRETE: 2500 PSI COMPRESSIVE STRENGTH AT 28 DAYS.
   REINFORCING STEEL: AASHTO M 31 OR M 53, GRADE 60
   STRUCTURAL STEEL: AASHTO-M270 GRADE 36 SHALL BE USED FOR THE CONNECTION PIN, CONNECTION LOOPS, AND STABILIZATION PINS. A ONE PIECE PIN WITH A 3" ROUNDED TOP MAY BE USED IN PLACE OF THE DETAILED CONNECTION PIN.
   DELINEATORS: DELINEATORS SHALL BE MOUNTED AT 10' SPACING ON TOP OF PRECAST BARRIER.

   IN APPLICATIONS WHERE BARRIER WALL IS WITHIN 6 FEET OF A TRAFFIC LANE, ADDITIONAL DELINEATORS SHALL BE PLACED ON THE BARRIER AT 10' SPACING APPROXIMATELY ONE (1) FOOT FROM THE TOP OF THE BARRIER. DELINEATORS SHALL BE ON THE ARDOT QUALIFIED PRODUCTS LIST FOR CONSTRUCTION CONCRETE BARRIER MARKERS.
   DELINEATOR COLOR SHALL BE IN ACCORDANCE WITH THE MANUAL ON UNIFORM TRAFFIC CONTROL DEVICES.
   PAYMENT FOR DELINEATORS SHALL BE CONSIDERED INCLUDED IN THE PRICE BID PER LIN. FT. FOR "FURNISHING AND INSTALLING PRECAST CONCRETE BARRIER". THE CONTRACTOR SHALL CERTIFY TO THE ENGINEER THAT THE MATERIAL AND THE DESIGN USED IN THE PRECAST BARRIER UNITS MEETS THE REQUIREMENTS AS SHOWN ON THIS STANDARD DRAWING.

3. OTHER PRECAST CONCRETE BARRIERS THAT HAVE BEEN CRASH TESTED AND APPROVED BY THE FEDERAL HIGHWAY ADMINISTRATION TO MEET THE REQUIREMENTS OF MANUAL FOR ASSESSING SAFETY HARDWARE (MASH) WILL BE ACCEPTED IN LIEU OF THE BARRIER SHOWN. DRAIN SLOTS SHALL BE PROVIDED AS NEEDED OR AS DIRECTED BY THE ENGINEER. THE CONTRACTOR SHALL FURNISH A CERTIFICATION OF MANUAL FOR ASSESSING SAFETY HARDWARE (MASH) COMPLIANCE FOR ANY OTHER TYPES OF PRECAST BARRIER TO BE USED. THE CERTIFICATION SHALL STATE THAT THE PRECAST CONCRETE BARRIER MEETS THE REQUIREMENTS OF MANUAL FOR ASSESSING SAFETY HARDWARE (MASH). MIXING OF SHAPES WILL NOT BE ALLOWED IN A CONTINUOUS LINE OF UNITS.

4. DOWEL HOLES IN PAVEMENT OR BRIDGE SLABS THAT ARE TO REMAIN IN PLACE SHALL BE FILLED. HOLES IN CONCRETE PAVEMENT AND BRIDGE SLABS SHALL BE FILLED WITH AN APPROVED NON-SHRINK EPOXY GROUT. HOLES IN ASPHALT PAVEMENT SHALL BE FILLED WITH AN APPROVED ASPHALT JOINT FILLER. PAYMENT FOR DRILLING AND FILLING HOLES TO BE INCLUDED IN THE PRICE FOR VARIOUS BARRIER ITEMS.

5. ATTACH UNITS TO ROADWAY SURFACE WITH STABILIZATION PINS AND TO DECK SLABS USING BOLTS WHEN REQUIRED.

6. A 4" WHITE PVC SLEEVE MAY BE USED TO FORM THE LIFTING HOLE AND IF USED THE SLEEVE IS TO BE LEFT IN PLACE.

DATE	REVISION	FILMED
11-07-19	REVISED NOTE 3	
2-27-14	REVISED BARRIER STABILIZATION DETAIL	
10-15-09	ADDED REFERENCE TO MASH	
8-5-09	REV. NOTE 3 CONCERNING DRAIN SLOTS	
11-29-07	REVISED NOTE 3	
5-25-06	DELETED GENERAL NOTE 7	
11-18-04	REVISED BARRIER STABILIZATION DETAIL BRIDGE DECKS	
4-10-03	REVISED GENERAL NOTE 2	
8-22-02	ISSUED NEW DRAWING	

ARKANSAS STATE HIGHWAY COMMISSION

STANDARD TRAFFIC CONTROLS FOR HIGHWAY CONSTRUCTION - TEMPORARY PRECAST BARRIER

STANDARD DRAWING TC-4

Ⓐ 4 feet or greater preferred. If less than 4 feet, Precast Units shall be connected to slab (SEE BARRIER STABILIZATION DETAIL-BRIDGE DECKS STD. DRWG. TC-4)

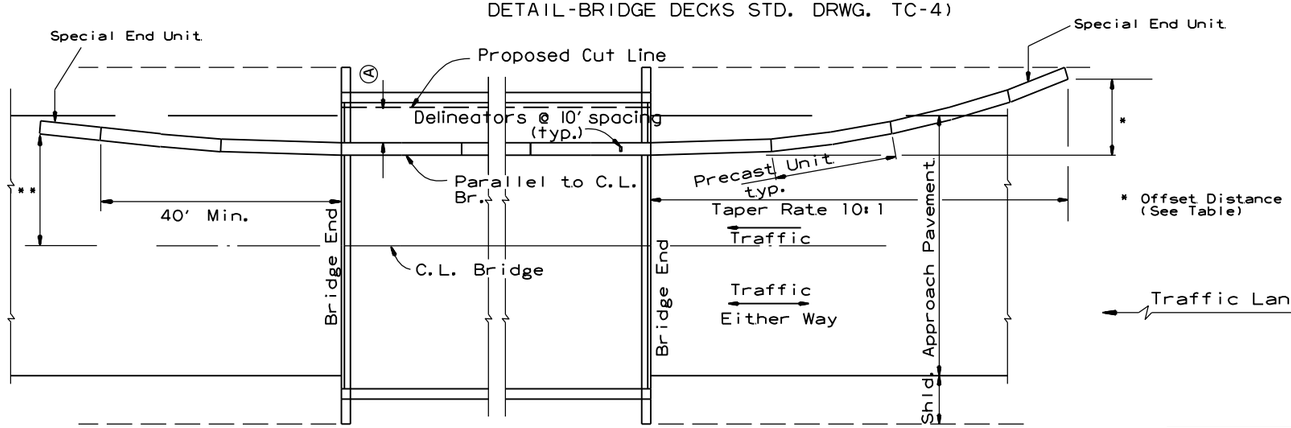

BARRIER PLACEMENT ALONG BRIDGE WITH OFFSET

No Scale

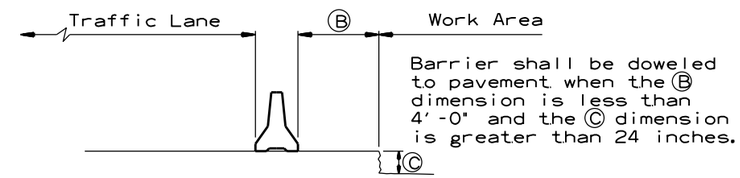

Barrier shall be doweled to pavement when the Ⓑ dimension is less than 4'-0" and the Ⓒ dimension is greater than 24 inches.

SECTION J-J

No Scale

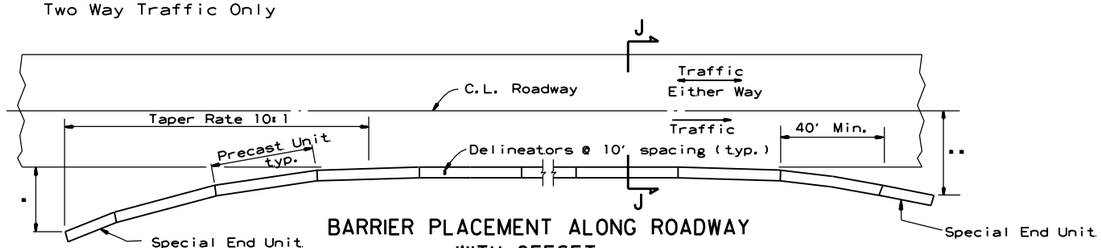

BARRIER PLACEMENT ALONG ROADWAY WITH OFFSET

No Scale

* Offset Distance (See Table)

** Offset Distance For Two Way Traffic Only

Offset Distance Table

Speed (MPH)	Offset Distance (FT.)
≤ 45	12
> 45	18

If offset distance is not attainable, then see "Barrier Placement With Attenuator" Detail shown below.

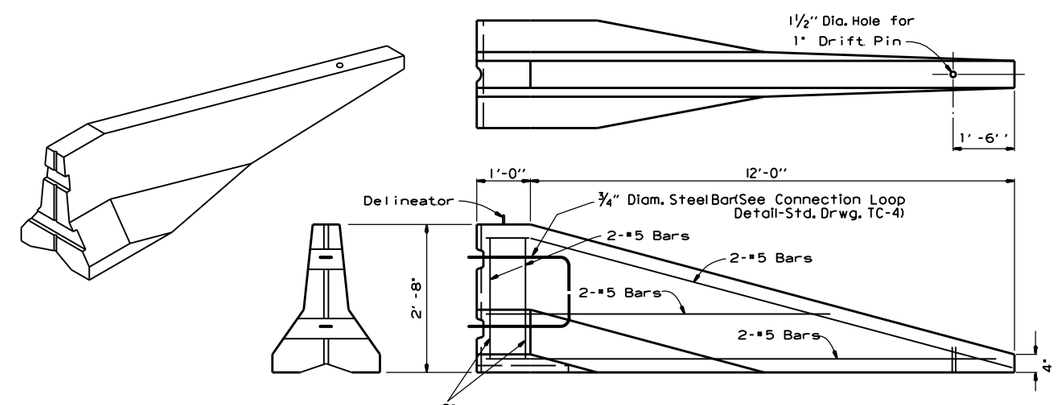

SPECIAL END UNIT

No Scale

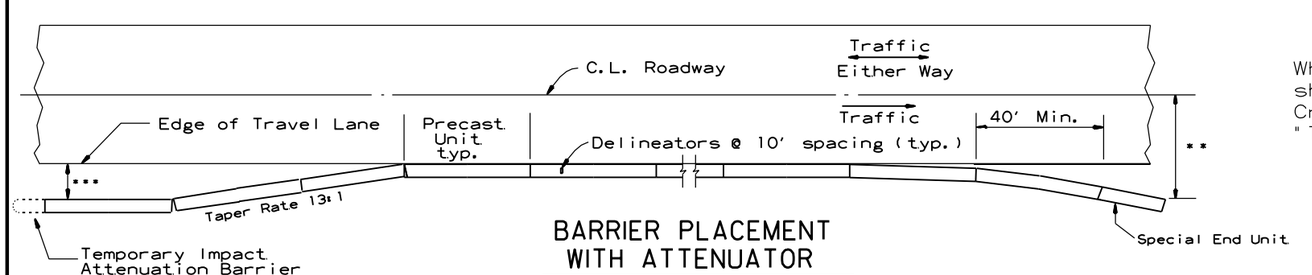

BARRIER PLACEMENT WITH ATTENUATOR

No Scale

*** Min. 3'-0" From Edge of Travel Lane to Nearest Edge of Attenuator

** Offset Distance For Two Way Traffic Only

General Notes

When shown on the Plans, the ends of the Temporary Precast Concrete Barrier shall be protected with a Manual For Assessing Safety Hardware (MASH) approved Crash Cushion. Payment for Crash Cushions shall be made under the item of "Temporary Impact Attenuation Barrier."

DATE	REVISION	FILMED
11-07-19	REVISED NOTE	
10-15-09	ADDED REFERENCE TO MASH	
5-25-06	REVISED BARRIER PLACEMENT	
8-22-02	ISSUED NEW DRAWING	

ARKANSAS STATE HIGHWAY COMMISSION

STANDARD TRAFFIC CONTROLS FOR HIGHWAY CONSTRUCTION - TEMPORARY PRECAST BARRIER

STANDARD DRAWING TC-5

GENERAL NOTES

INSTALL A MINIMUM OF 2 UPSLOPE STAKES AND 4 DOWNSLOPE STAKES AT AN ANGLE TO WEDGE WATTLE TO BOTTOM OF DITCH.

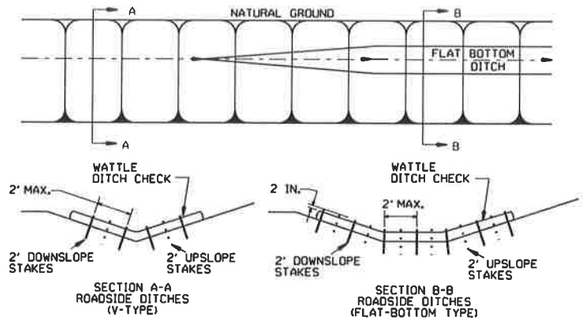

WATTLE DITCH CHECK (E-1)

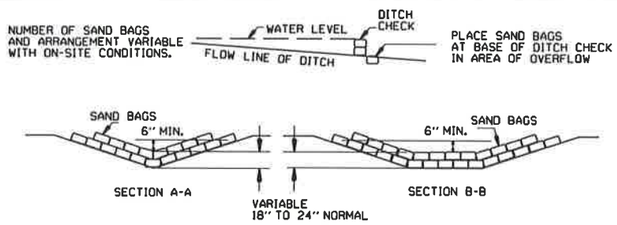

SAND BAG DITCH CHECK (E-5)

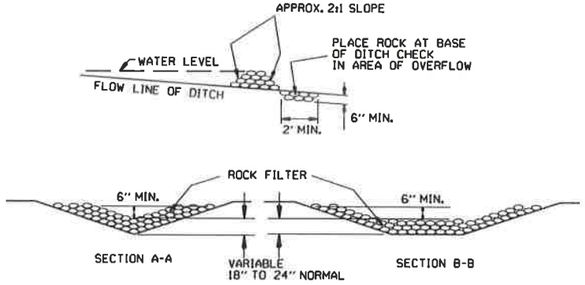

ROCK DITCH CHECK (E-6)

GENERAL NOTES

GEOTEXTILE FABRIC (TYPE 4) IN ACCORDANCE WITH SECTION 625

GEOTEXTILE FABRIC SHALL BE SPLICED TOGETHER WITH A SEWN SEAM ONLY AT A SUPPORT POST OR TWO SECTIONS OF FENCE MAY BE OVERLAPPED INSTEAD. PAYMENT OF ADDITIONAL MATERIAL FOR OVERLAP WILL NOT BE MADE.

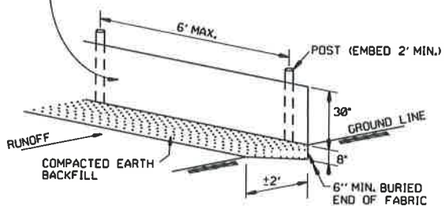

SILT FENCE (E-11)

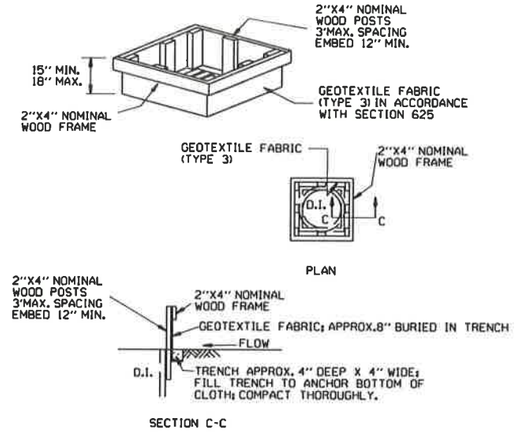

DROP INLET SILT FENCE (E-7)

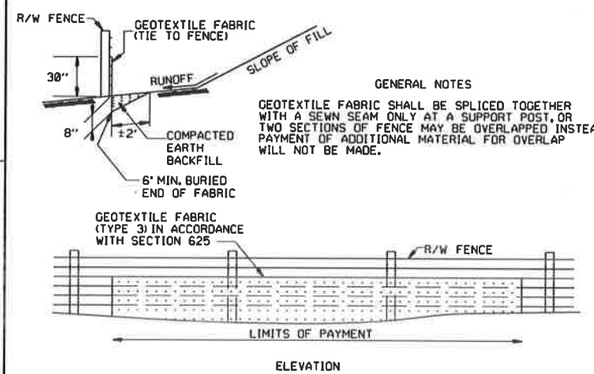

GENERAL NOTES

GEOTEXTILE FABRIC SHALL BE SPLICED TOGETHER WITH A SEWN SEAM ONLY AT A SUPPORT POST, OR TWO SECTIONS OF FENCE MAY BE OVERLAPPED INSTEAD. PAYMENT OF ADDITIONAL MATERIAL FOR OVERLAP WILL NOT BE MADE.

SILT FENCE ON R/W FENCE (E-4)

GENERAL NOTES

1. STRAW BALES SHALL BE INSTALLED SO THAT THE BINDINGS ARE ORIENTED AROUND THE SIDES RATHER THAN ALONG THE TOPS AND BOTTOMS OF THE BALES. THE BALES SHALL BE A MINIMUM OF 30 INCHES IN LENGTH.

2. NO GAPS SHALL BE LEFT BETWEEN BALES.

3. BALED STRAW FILTER BARRIERS COMPLETED AND ACCEPTED WILL BE MEASURED BY THE BALE IN PLACE AS AUTHORIZED BY THE ENGINEER AND WILL BE PAID FOR AT THE CONTRACT UNIT PRICE BID PER BALE FOR BALED STRAW DITCH CHECKS.

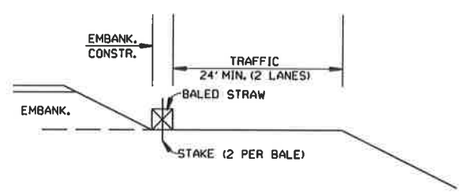

BALED STRAW FILTER BARRIER (E-2)

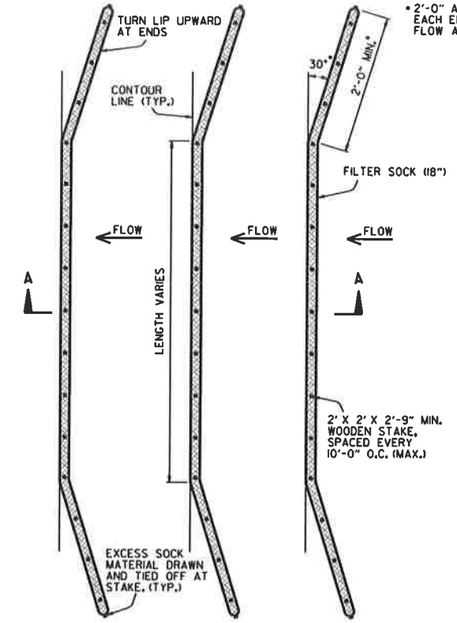

PLAN VIEW
N.T.S.

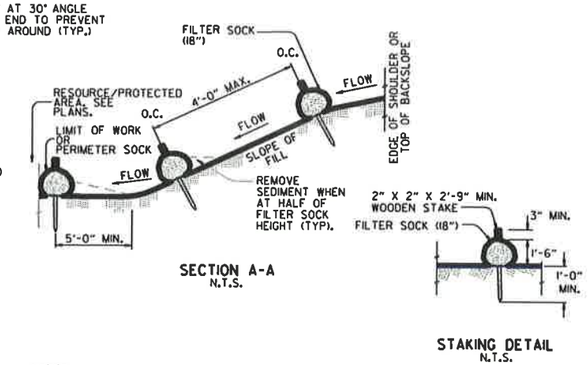

STAKING DETAIL
N.T.S.

NOTES:

1. FILTER SOCKS CAN BE PLACED AT THE TOP, ON THE FACE, AND AT THE TOE OF SLOPES AS SEDIMENT-TRAPPING DEVICES FOR SHEET FLOW RUNOFF.

2. FILTER SOCKS ARE TYPICALLY SUPPLIED AND INSTALLED WITH 18 INCH DIAMETERS. DIAMETER TOLERANCE IS 2 INCHES, AS FILTER SOCKS TEND TO FLATTEN OUT WHEN PLACED.

3. STEEL POSTS MAY BE USED AND SHALL BE ROLLED FROM HIGH CARBON STEEL AND HAVE A MINIMUM OF 1.25 LB./FT. POSTS SHALL BE HOT-DIPPED GALVANIZED OR PAINTED WITH HIGH-GRADE WEATHER RESISTANT BROWN OR BLACK STEEL PAINT. STEEL POSTS SHALL BE EQUIPPED WITH ANCHOR PLATE HAVING A MINIMUM AREA OF 14 SQUARE INCHES. POSTS SHALL BE STUDDED, EMBOSSED, OR PUNCHED. POSTS AND ANCHOR PLATES SHALL CONFORM TO THE REQUIREMENTS OF ASTM A702. NO ADDITIONAL PAYMENT WILL BE PROVIDED FOR STEEL POSTS, BUT PRICE WILL BE CONSIDERED SUBIDIARY TO "FILTER SOCK (18")."

4. FILTER SOCKS MAY BE UP TO 250 FEET LONG. WHEN USED ON LONG SLOPES, FILTER SOCKS MAY BE JOINTED OR STAGGERED AS SHOWN IN DETAILS.

5. INSPECT FILTER SOCKS AFTER EACH RUNOFF EVENT. REMOVE AND REPLACE IF SIGNS OF UNDERCUTTING OR DOWNSTREAM RILLS ARE OBSERVED.

FILTER SOCK ALONG SLOPE (E-3)

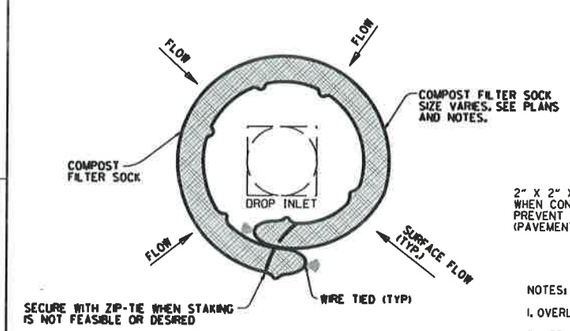

DROP INLET PLAN VIEW
N.T.S.

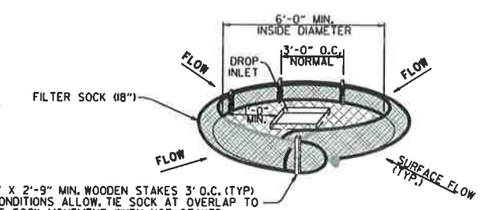

DROP INLET PERSPECTIVE VIEW
N.T.S.

NOTES:

1. OVERLAP ENDS OF SOCK (1' MIN. 3' MAX.).

2. USE 18" DIA. SOCK IN NON-TRAFFIC AREAS OR AREAS WHERE SAFETY IS NOT A CONCERN.

COMPOST FILTER SOCK DROP INLET PROTECTION (E-13)

DATE	REVISION	FILMED
11-16-17	ADDED FILTER SOCK E-3 AND E-13	
12-15-11	DELETED BALED STRAW DITCH CHECK & ADDED WATTLE DITCH CHECK	
11-18-98	ADDED NOTES	
07-02-98	ADDED BALED STRAW FILTER BARRIER (E-2)	
07-20-95	REVISED SILT FENCE E-4 AND E-11	7-20-95
07-15-94	REV. E-4 & E-11 MIN. 13" BURIED END OF FABRIC	
06-02-94	REVISED E-1,4,7 & 11; DELETED E-2 & 3	6-2-94
04-01-93	REDRAWN	
10-01-92	REDRAWN	
08-02-76	ISSUED R.D.M.	298-7-28-76

ARKANSAS STATE HIGHWAY COMMISSION

TEMPORARY EROSION CONTROL DEVICES

STANDARD DRAWING TEC-1

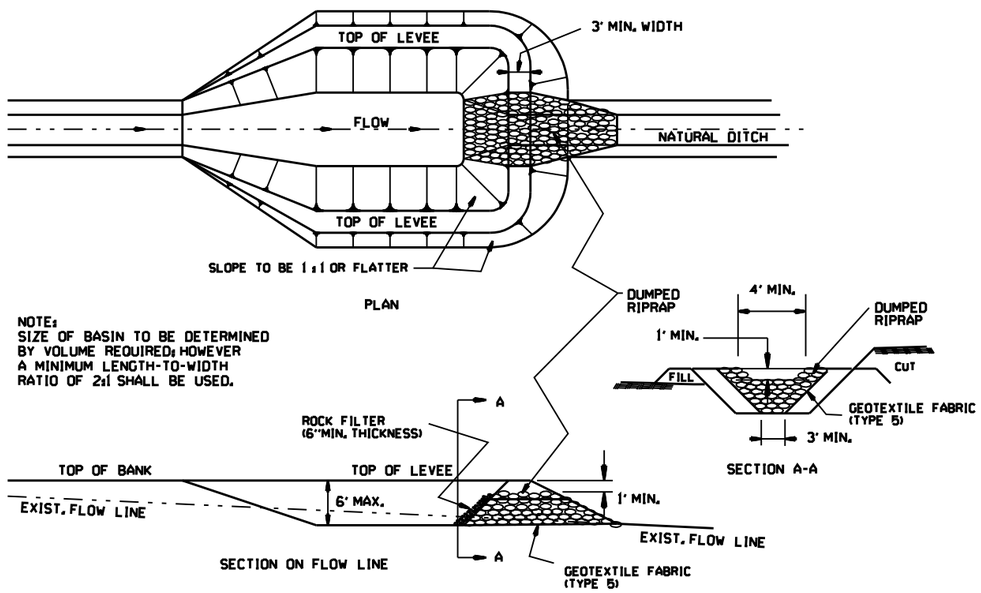

NOTE:
SIZE OF BASIN TO BE DETERMINED BY VOLUME REQUIRED; HOWEVER A MINIMUM LENGTH-TO-WIDTH RATIO OF 2:1 SHALL BE USED.

SEDIMENT BASIN WITH RIPRAP OUTLET (E-9)

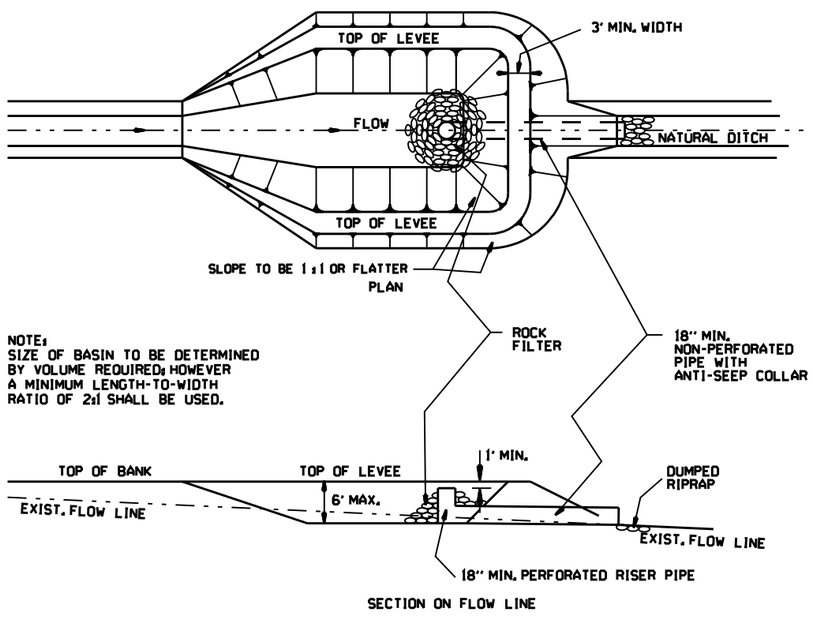

NOTE:
SIZE OF BASIN TO BE DETERMINED BY VOLUME REQUIRED; HOWEVER A MINIMUM LENGTH-TO-WIDTH RATIO OF 2:1 SHALL BE USED.

SEDIMENT BASIN WITH PIPE OUTLET (E-10)

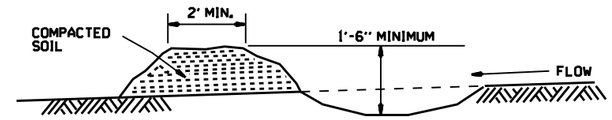

DIVERSION DITCH (E-8)

NOTE:
A T-SECTION SHALL BE USED AT THE INLET FOR TWO-DIRECTIONAL FLOW.
AN ELBOW SHALL BE USED FOR ONE-DIRECTIONAL FLOW.

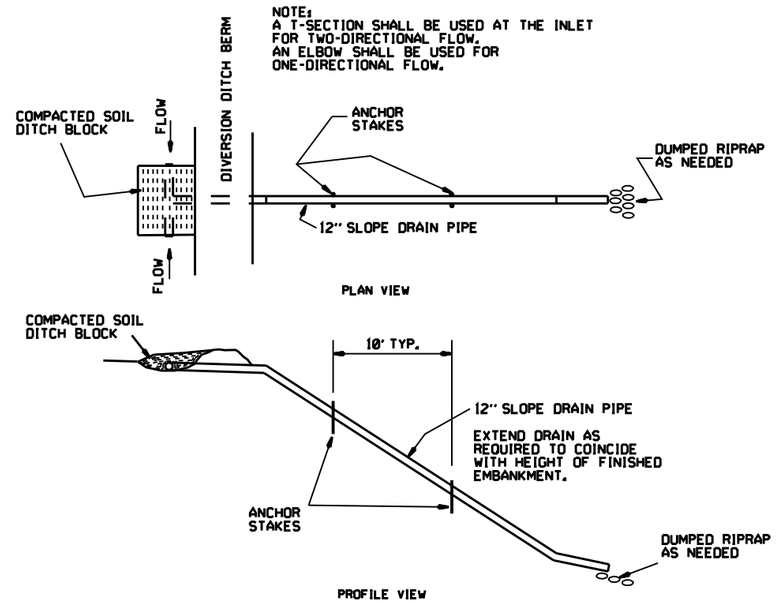

SLOPE DRAIN (E-12)

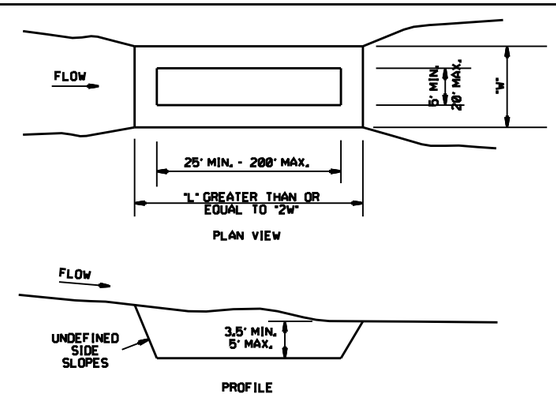

SEDIMENT BASIN (E-14)

DATE	REVISION	FILMED
6-2-94	Revised E-8 & E-12; Added E-14 & Deleted E-13	
4-1-93	ISSUED	

ARKANSAS STATE HIGHWAY COMMISSION

TEMPORARY EROSION CONTROL DEVICES

STANDARD DRAWING TEC-2

CLEARING AND GRUBBING

CONSTRUCTION SEQUENCE

1. PLACE PERIMETER CONTROLS (I.E. SILT FENCES , DIVERSION DITCHES, SEDIMENT BASINS, ETC.)
2. PERFORM CLEARING AND GRUBBING OPERATION.

EXCAVATION

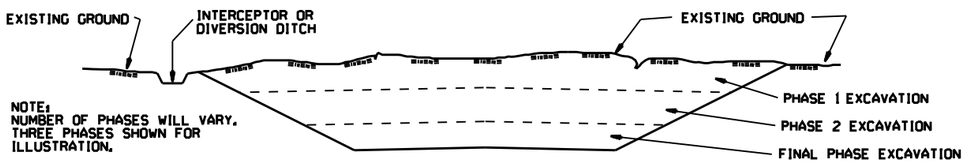

GENERAL NOTE

ALL CUT SLOPES SHALL BE DRESSED, PREPARED, SEEDED, AND MULCHED AS THE WORK PROGRESSES. SLOPES SHALL BE EXCAVATED AND STABILIZED IN EQUAL INCREMENTS NOT TO EXCEED 25 FEET, MEASURED VERTICALLY.

CONSTRUCTION SEQUENCE

1. EXCAVATE AND STABILIZE INTERCEPTOR AND/OR DIVERSION DITCHES.
2. PERFORM PHASE 1 EXCAVATION. PLACE PERMANENT OR TEMPORARY SEEDING.
3. PERFORM PHASE 2 EXCAVATION. PLACE PERMANENT OR TEMPORARY SEEDING.
4. PERFORM FINAL PHASE OF EXCAVATION. PLACE PERMANENT OR TEMPORARY SEEDING. STABILIZE DITCHES. CONSTRUCT DITCH CHECKS, DIVERSION DITCHES, SEDIMENT BASINS, OR OTHER EROSION CONTROL DEVICES AS REQUIRED.

EMBANKMENT

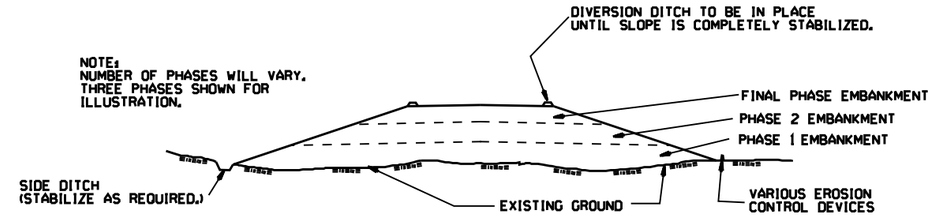

GENERAL NOTE

ALL EMBANKMENT SLOPES SHALL BE DRESSED, PREPARED, SEEDED, AND MULCHED AS THE WORK PROGRESSES. SLOPES SHALL BE CONSTRUCTED AND STABILIZED IN EQUAL INCREMENTS NOT TO EXCEED 25 FEET, MEASURED VERTICALLY.

CONSTRUCTION SEQUENCE

1. CONSTRUCT DIVERSION DITCHES, DITCH CHECKS, SEDIMENT BASINS, SILT FENCES, OR OTHER EROSION CONTROL DEVICES AS SPECIFIED.
2. PLACE PHASE 1 EMBANKMENT WITH PERMANENT OR TEMPORARY SEEDING. PROVIDE DIVERSION DITCHES AND SLOPE DRAINS IF EMBANKMENT CONSTRUCTION IS TO BE TEMPORARILY ABANDONED FOR A PERIOD OF GREATER THAN 21 DAYS.
3. PLACE PHASE 2 EMBANKMENT WITH PERMANENT OR TEMPORARY SEEDING. PROVIDE DIVERSION DITCHES AND SLOPE DRAINS IF EMBANKMENT CONSTRUCTION IS TO BE TEMPORARILY ABANDONED FOR A PERIOD OF GREATER THAN 21 DAYS.
4. PLACE FINAL PHASE OF EMBANKMENT WITH PERMANENT OR TEMPORARY SEEDING. PLACE DIVERSION DITCHES AND SLOPE DRAINS AND MAINTAIN UNTIL ENTIRE SLOPE IS STABILIZED.

DATE	REVISION	FILMED
11-03-94	CORRECTED SPELLING	
6-2-94	Drawn & Issued	6-2-94

ARKANSAS STATE HIGHWAY COMMISSION

TEMPORARY EROSION CONTROL DEVICES

STANDARD DRAWING TEC-3

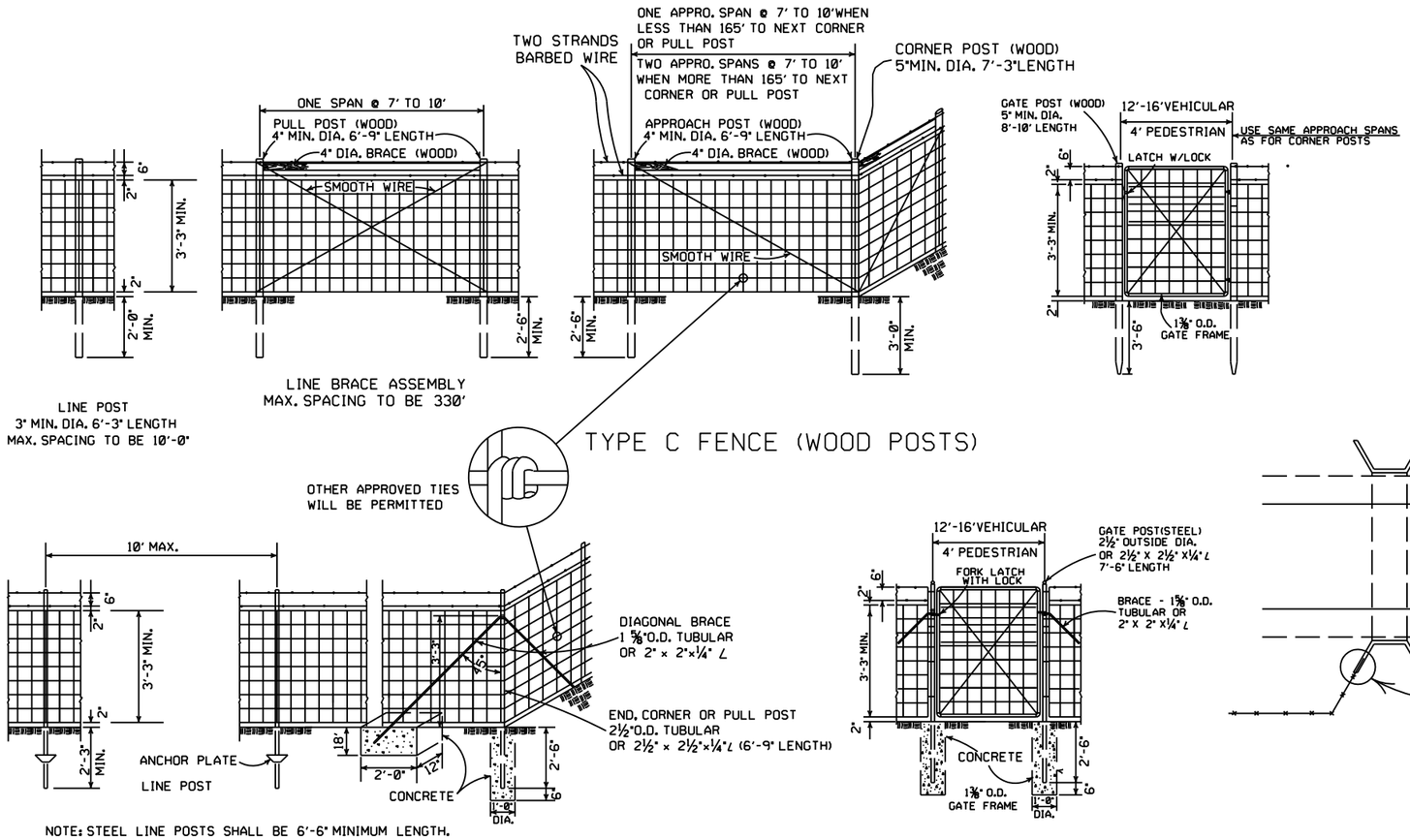

TYPE C FENCE (WOOD POSTS)

TYPE C FENCE (STEEL POSTS)

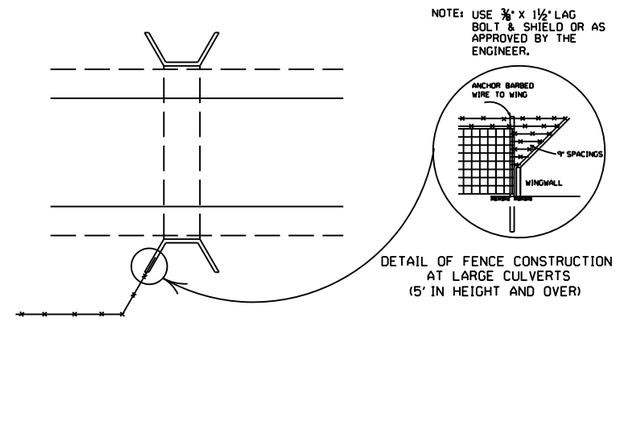

GENERAL NOTES:

STEEL LINE POSTS SHALL BE PAINTED OR GALVANIZED.
TUBULAR END, CORNER, PULL, OR DIAGONAL BRACES MUST CONFORM TO THE DIMENSIONS AND WEIGHTS SPECIFIED ON STANDARD DRAWING WF-3 (CHAIN LINK). APPROVED ALTERNATES ARE ACCEPTABLE.
AN ACCEPTABLE TOLERANCE IN LENGTH OF TUBULAR OR WOODEN POSTS SHALL BE - 1" TO +2".
TUBULAR POSTS MUST BE PAINTED OR GALVANIZED.

THE CONTRACTOR SHALL FURNISH AT LEAST 25% OF TIMBER LINE POSTS OF 7 FOOT LENGTHS IN ORDER TO PROVIDE SUFFICIENT SET IN SOFT GROUND OR SMALL DEPRESSIONS.

DRIVEWAY GATES, EITHER SINGLE 12' TO 16' OR DOUBLE 6' TO 8' OPENING OF THE SAME TYPE AS THE PEDESTRIAN GATE, SHALL BE INSTALLED ON THE RIGHT SIDE OF EACH THROUGH LANE ROAD AT LARGE CULVERTS OR BRIDGE CROSS FENCE, FOR USE OF MAINTENANCE EQUIPMENT. LOCATION OF GATES TO BE SHOWN ON PLANS OR AS DESIGNATED BY THE ENGINEER.

AT STREAM CROSSINGS, THE FENCE SHALL NOT BE CONSTRUCTED ACROSS LARGE STREAMS. WHERE CLEARANCE IS SUFFICIENT FROM THE TOP OF THE BANK TO THE BRIDGE STRUCTURE A CROSS CONNECTION SHALL BE CONSTRUCTED BETWEEN THE FENCE ON EACH SIDE OF THE ROAD. WHERE THE CLEARANCE IS NOT SUFFICIENT, THE FENCE SHALL BE TERMINATED WITH CROSS CONNECTIONS AND END POSTS ADJACENT TO BRIDGE ABUTMENTS OR CULVERT WINGWALLS.

SPLICE FOR BARBED WIRE BETWEEN PULL POST ASSEMBLY SHALL BE BY THE "EYE METHOD" AS DESCRIBED AS FOLLOWS:
THE ENDS OF THE BARBED WIRE SHALL BE BENT TO FORM A LOOP. THE LOOPS SHALL BE CONNECTED. AFTER THE LOOPS ARE CONNECTED THE ENDS OF THE WIRE SHALL BE WRAPPED AROUND THE PROJECTING WIRES A MINIMUM OF 4 TIMES FOR EACH WIRE LOOP.

SPLICE FOR WOVEN WIRE BETWEEN PULL POST SHALL BE BY THE "WESTERN UNION METHOD" AS DESCRIBED AS FOLLOWS: THE VERTICAL WIRES FOR EACH END OF THE FENCE FABRIC SHALL BE PLACED SIDE BY SIDE AND THE PROJECTING HORIZONTAL WIRES SHALL BE WRAPPED A MINIMUM OF 4 TIMES AROUND THE HORIZONTAL WIRES OF THE FIRST WEB.

STAPLE AT LEAST TOP, BOTTOM AND ALTERNATE WIRES OF WOVEN FABRIC FOR WOOD LINE POSTS.

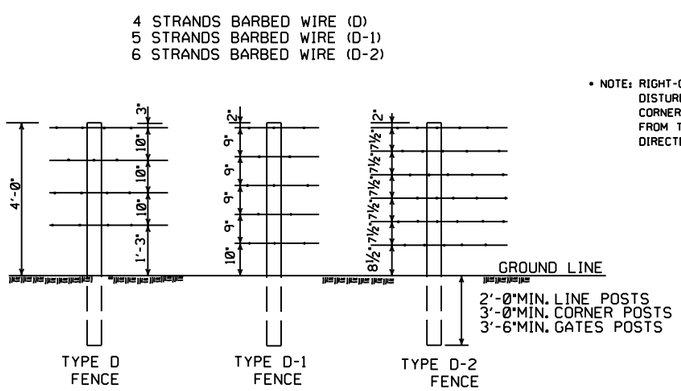

NOTE: SPACING AND SIZE (EXCEPT LENGTH) OF POSTS, APPROACH SPANS, PULL POST ASSEMBLIES, AND CORNER BRACING FOR TYPE D FENCE SHALL CONFORM TO TYPE C FENCE. USE GALVANIZED STAPLES ON WOOD POSTS AND APPROVED FASTENERS ON STEEL POSTS.

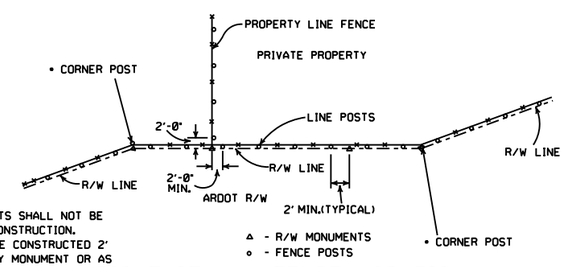

• NOTE: RIGHT-OF-WAY MONUMENTS SHALL NOT BE DISTURBED BY FENCE CONSTRUCTION. CORNER POSTS SHALL BE CONSTRUCTED 2' FROM THE RIGHT-OF-WAY MONUMENT OR AS DIRECTED BY THE ENGINEER.

RIGHT-OF-WAY FENCE LOCATION

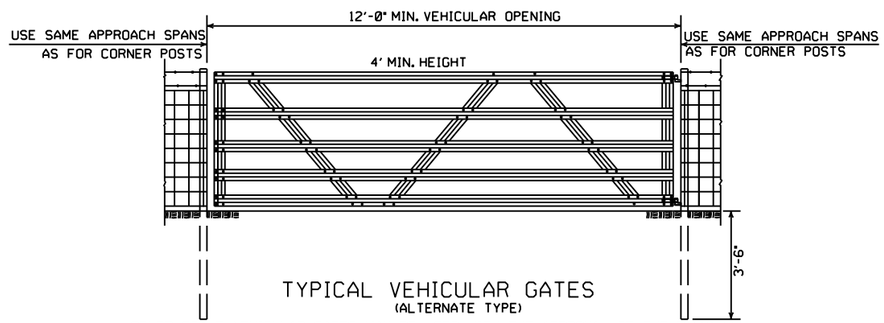

TYPICAL VEHICULAR GATES
(ALTERNATE TYPE)

OTHER STYLE VEHICULAR GATES MAY BE USED WITH THE APPROVAL OF THE ENGINEER.
THE METHOD OF SECURING GATE (LATCH AND/OR LOCK) SHALL MEET THE APPROVAL OF THE ENGINEER.

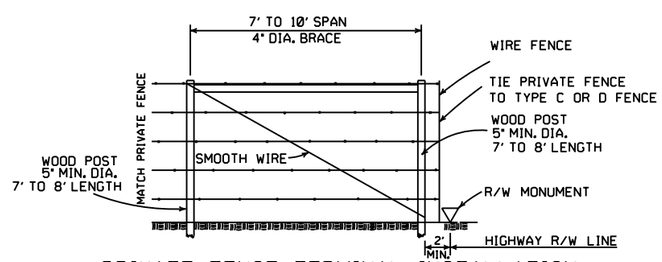

PRIVATE FENCE TERMINAL INSTALLATION
WHERE EXISTING FENCE CONSISTS OF STEEL POSTS, USE END POST ASSEMBLY AS SHOWN IN TYPE C FENCE OR OTHER END POST ASSEMBLY AS APPROVED BY THE ENGINEER.

DATE	REVISION	FILMED
8-22-02	REVISED GENERAL NOTES	
10-18-96	REVISED AASHTO	
11-22-95	REVISED R-O-W LOCATION DETAIL	
6-2-94	REVISED BARB WIRE AND ADDED CORNER POST NOTES	6-2-94
8-5-93	REVISED R/W INSTALLATION FENCE	8-5-93
10-1-92	ADDED STAPLE NOTE	10-1-92
8-15-91	ADDED TYPE D-2 FENCE	8-15-91
11-30-89	DELETED CLASS CONCRETE	11-30-89
7-15-88	ADDED SPLICE NOTE	700-7-15-88
10-30-87	GENERAL REVISIONS	549-10-30-87
11-1-84	MAX. POST SPACING MIN. WIRE GAUGE	507-11-1-84
1-4-83	MIN. DIA. LINE POST	648-1-4-83
3-2-81	TOLERANCE FOR POST LENGTH	722-3-2-81
12-1-72	ADDED D-1 & FENCE INSTALLATION	564-12-1-72
10-2-72	REVISED AND REDRAWN	540-10-2-72

ARKANSAS STATE HIGHWAY COMMISSION

WIRE FENCE TYPE C AND D

STANDARD DRAWING WF-4