DATE REVISED	DATE FILMED	DATE REVISED	DATE FILMED	FED. ROAD DIST. NO.	STATE	F.A.P. AID PROJ. NO.	SHEET NO.	TOTAL SHEETS
				6	ARK.			
				JOB NO.		R30037	23	176

(1) 6332 QUANT 30403

SCHEDULE OF BRIDGE QUANTITIES – JOB R30037

BRIDGE NO.	CODE NO.	NAME PLATE TITLE	UNIT OF STRUCTURE	ITEM NO.	205	603	802	802	803	804	805	805	805	807	808	809	812	816	816
				ITEM	REMOVAL OF EXISTING BRIDGE STRUCTURE (SITE NO. 1)	TEMPORARY BRIDGE STRUCTURE (24' ROADWAY WIDTH)	CLASS S CONCRETE	CLASS S(AE) CONCRETE	BOILED LINSEED OIL	REINFORCING STEEL (GRADE 60)	STEEL PILING (HP 10×42)	STEEL PILING (HP 12×53)	PILE ENCASEMENT	STRUCTURAL STEEL IN BEAM SPANS (A588)	ELASTOMERIC BEARINGS	PREFORMED JOINT SEAL	BRIDGE NAME PLATE (TYPE C)	FILTER BLANKET	DUMPED RIPRAP
				UNIT	LUMP SUM	LIN FT.	CU. YD.	CU. YD.	GAL.	LB.	LIN FT.	LIN. FT.	LIN. FT.	LB.	CU. IN.	LIN. FT.	EACH	SQ YD	CU. YD.
6332	X071	SOUTH FORK OZAN CREEK	END BENT NOS. 1 & 4				39.10		0.4	4780	300			1208	1736.7		1	597	299
			INT. BENT NOS. 2 & 3				19.10			1970		350	105		1820.0				
			150' CONT. COMP. W-BEAM UNIT					148.70	13.1	33,030				85092		70			
TOTAL FOR JOB NO. R30037					1.0	110	58.20	148.70	13.5	39,780	300	350	105	86300	3556.7	70	1	597	299

PHIL BRAND
DESIGN SECTION SUPERVISOR

SCHEDULE OF BRIDGE QUANTITIES
OZAN – WASHINGTON
HEMPSTEAD COUNTY
ROUTE 4 SEC 5
ARKANSAS STATE HIGHWAY COMMISSION
LITTLE ROCK, ARK.

DRAWN BY GLL DATE 2-16-89
CHECKED BY SMI DATE 2-21-89 SCALE NONE
DESIGNED BY DATE

Vesal Pinkerton
BRIDGE ENGINEER

BRIDGE NO. 6332 DRAWING NO. 30403

6-1-91

DATE REVISED	DATE FILMED	DATE REVISED	DATE FILMED	FED. ROAD DIST. NO.	STATE	FED. AID PROJ. NO.	SHEET NO.	TOTAL SHEETS
				6	ARK.			
				JOB NO.		R30037	51	176
				(1) 6332		LAYOUT	30404	

For R/W Data - See Rdwy. Plans

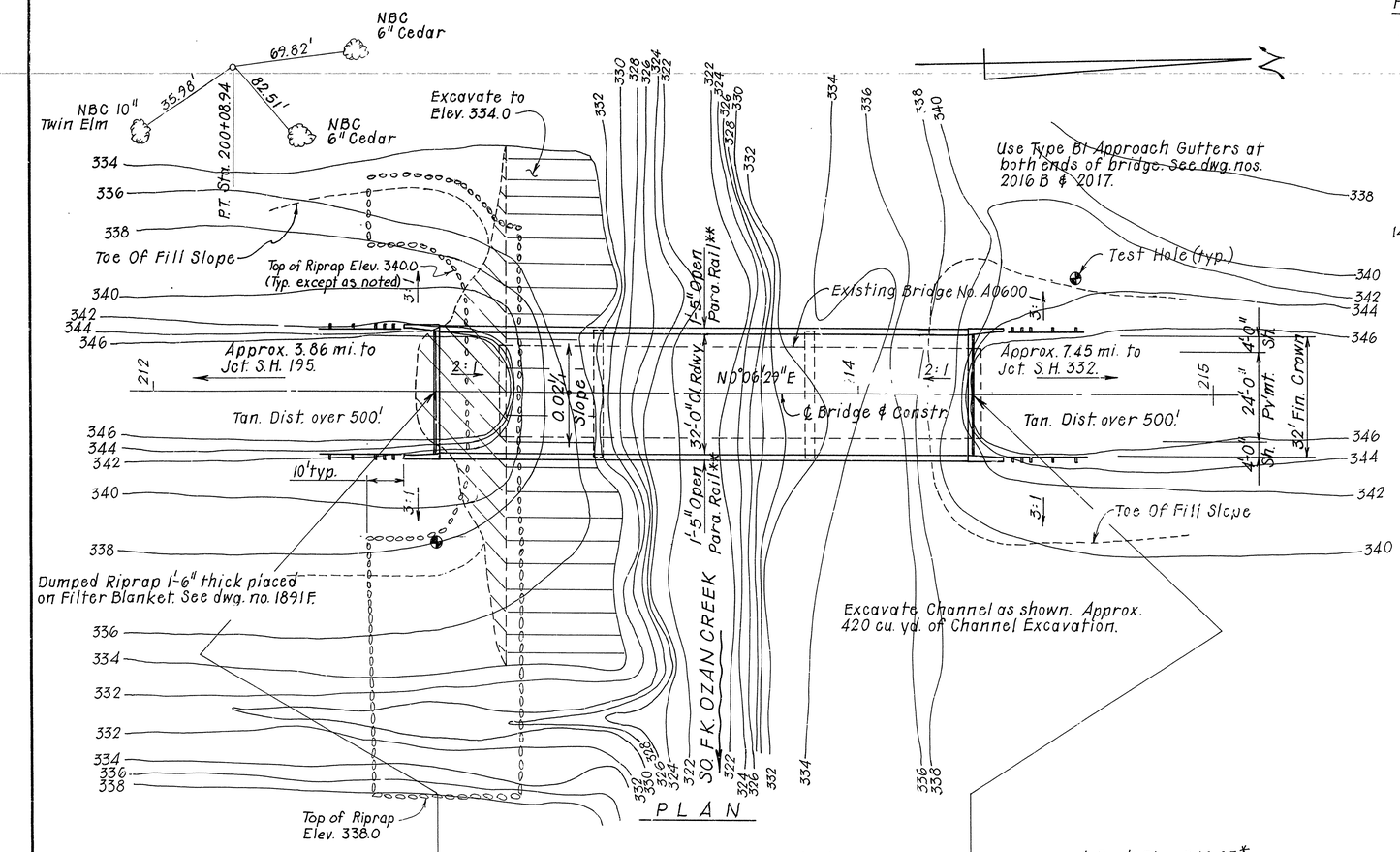

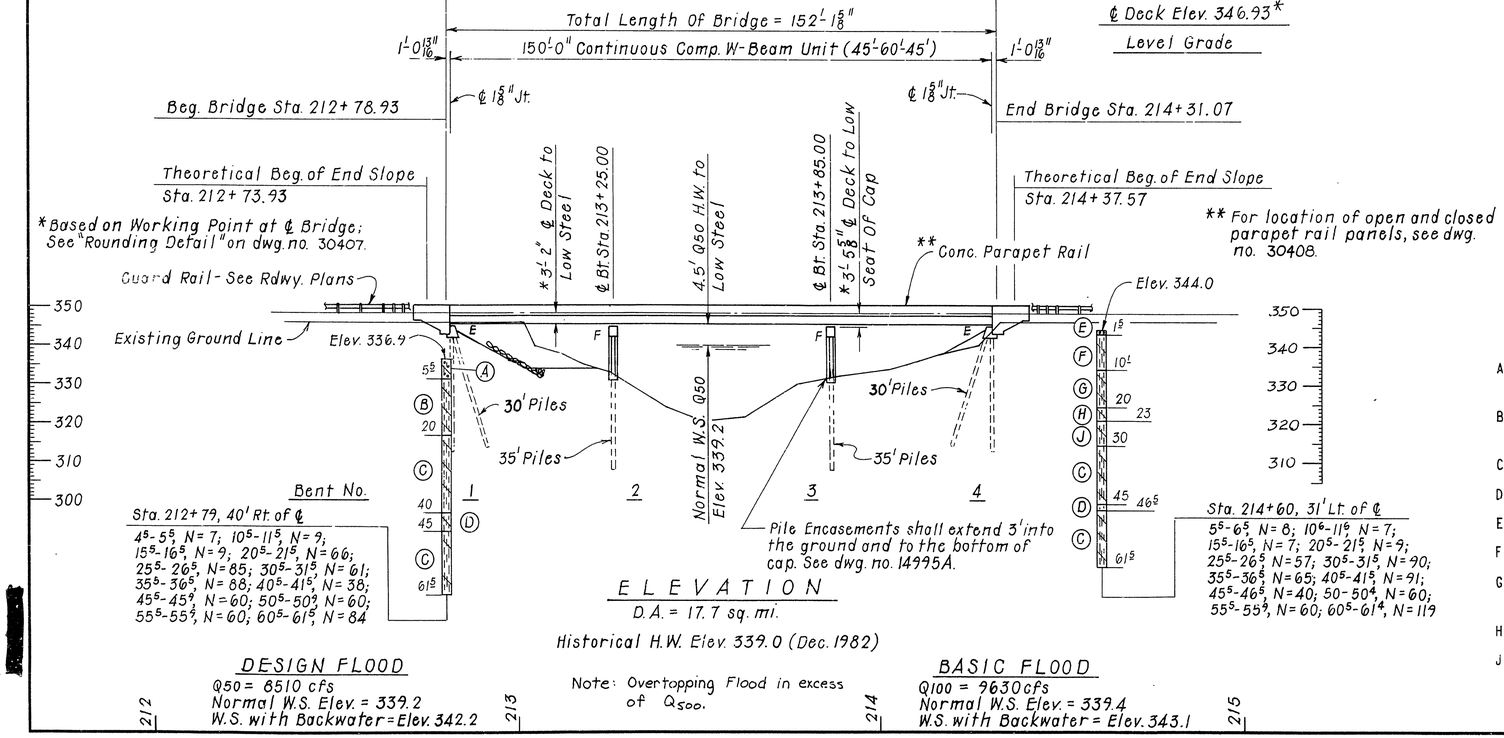

DESIGN FLOOD
Q50 = 8510 cfs
Normal W.S. Elev. = 339.2
W.S. with Backwater = Elev. 342.2

Note: Overtopping Flood in excess of Q_{500}.

BASIC FLOOD
Q100 = 9630 cfs
Normal W.S. Elev. = 339.4
W.S. with Backwater = Elev. 343.1

GENERAL NOTES

BENCH MARK: "a" cut on wheel guard 13' left of Centerline Existing Hwy. No.4 at Sta 214+33, Elevation 346.92.

CONSTRUCTION SPECIFICATIONS: Arkansas State Highway and Transportation Department Standard Specifications for Highway Construction, 1991 edition, with applicable supplemental specifications and special provisions.

DESIGN SPECIFICATIONS: AASHTO Standard Specifications for Highway Bridges, 1989 with current interim specifications.

LIVE LOADING: HS20 METHOD OF DESIGN: Load Factor

MATERIALS AND STRENGTHS:

Class S(AE) Concrete (superstructure)	f'c = 4,000 psi
Class S Concrete (substructure)	f'c = 3,500 psi
Reinforcing Steel (A615 or A617, GR. 60)	Fy = 60,000 psi
Structural Steel (A588)	Fy = 50,000 psi
Structural Steel (A36)	Fy = 36,000 psi

BORING LOGS: Boring logs may be obtained from the Programs and Contracts Division.

STEEL PILING: Piling in End Bents 1 & 4 shall be HP 10X42 and shall be driven to a min. *safe* bearing capacity of 55 tons per pile. Piling in Bents 2 and 3 shall be HP 12X53 and shall be driven to a min. *safe* bearing capacity of 70 tons per pile. All piling shall be driven with an approved air, steam, or diesel hammer into the material designated as calcareous silty clay on the boring legend. Piling in end bents shall be driven after embankment to bottom of cap is in place. Lengths shown are for estimating quantities and for use in determining payment for cut-off and build-up in accordance with the specifications. Minimum penetration for bents 2 & 3 shall be 25' below natural ground.

PREDRILLING: Predrilling may be required to obtain the minimum penetration. Backfill with Class "S" Concrete, aggregate base course or other suitable material as directed by the Engineer. Any cost from predrilling shall be included in the item "Steel Piling". Size and depth of predrilling shall be approved by the engineer.

BRIDGE DECK: The concrete bridge deck shall be given a tine finish as specified for final finishing in subsection 802.20 for Class S Bridge Roadway Surface Finish.

DETAIL DRAWINGS:	DRAWING NO.
End Bents	30405
Intermediate Bents	30406
150'-0" Cont. Comp. W-Beam Unit	30407 - 30410
Permanent Steel Bridge Deck Forms	14991
Steel Piling	14995A
Type B1 Approach Gutters	2016B & 2017

EXISTING BRIDGE: The existing bridge No. A0600 (Log Mile 11.89) is 28' wide and 138' long and consists of four steel I-beam spans supported by a concrete substructure.

REMOVAL AND SALVAGE: The existing bridge (A0600) shall be removed in accordance with section 205 of the Standard Specifications. All material from the existing bridge shall become the property of the contractor.

TEMPORARY BRIDGE: Construct a 110' long temporary bridge approximately 45' downstream of centerline construction. The temporary bridge shall have a minimum roadway width of 24', a minimum live load capacity of H15, and a minimum deck elevation of 341.50. See Section 603 of the Standard Specifications. See drawing no. 2391, 2391A, and 2392 for standard detour bridge details. If timber piling and pine timber are used on this temporary bridge structure, the materials shall be treated with a preservative according to the Standard Specifications.

BORING LEGEND

A - Moist, Medium Stiff, Brown and Gray Silty Clay with some Pea Gravel and Organic Matter

B - Moist, Stiff, Brown and Gray Silty Clay with some Pea Gravel

C - Moist, Very Hard, Gray Calcareous Silty Clay

D - Moist, Hard, Gray Calcareous Silty Clay

E - Moist, Loose, Brown and Gray Gravel (Fill Material)

F - Moist, Medium Stiff, Brown and Gray Silty Clay

G - Moist, Medium Stiff, Brown and Gray Silty Clay with some Organic Matter

H - Moist, Stiff, Brown and Gray Silty Clay

J - Moist, Hard, Gray and Brown Calcareous Silty Clay

LAYOUT OF BRIDGE OVER
SOUTH FORK OZAN CREEK
OZAN - WASHINGTON
HEMPSTEAD COUNTY
ROUTE 4 SEC. 5

ARKANSAS STATE HIGHWAY COMMISSION
LITTLE ROCK, ARK.

DRAWN BY: W. May DATE: 10-21-88
CHECKED BY: CES DATE: 10-10-89
DESIGNED BY: SML DATE: 5-25-88
SCALE: 1" = 20'

Veral Pinkerton
BRIDGE ENGINEER

BRIDGE NO. 6332 DRAWING NO. 30404

8-3-91

DATE REVISED	DATE FILMED	DATE REVISED	DATE FILMED	FED. ROAD DIST. NO.	STATE	FED. AID PROJ. NO.	SHEET NO.	TOTAL SHEETS
				6	ARK.			
				JOB NO.		R30037	52	176
				(1) 6332		END BENT		30405

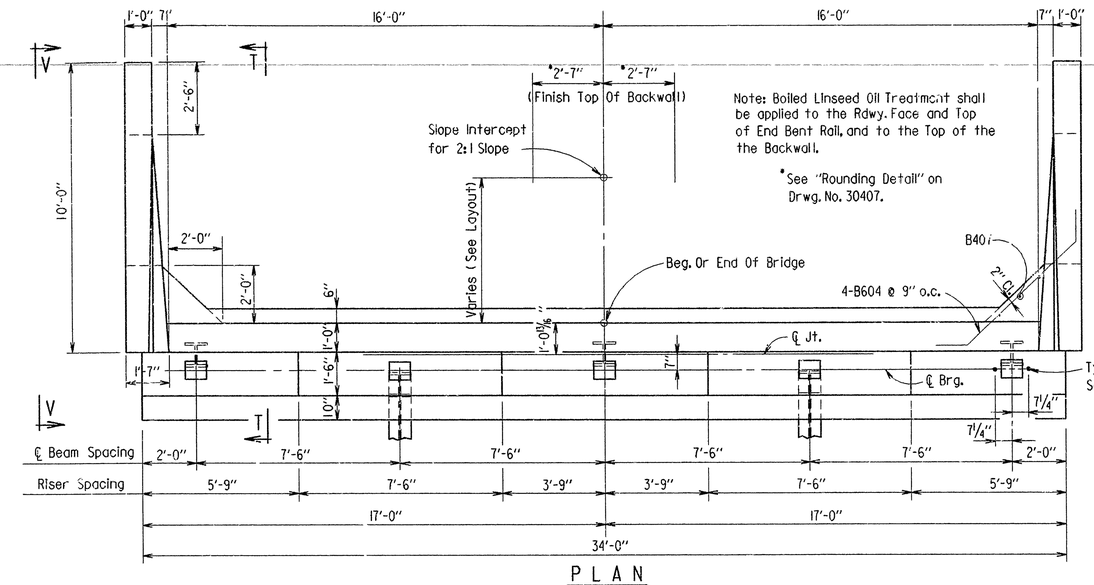

PLAN

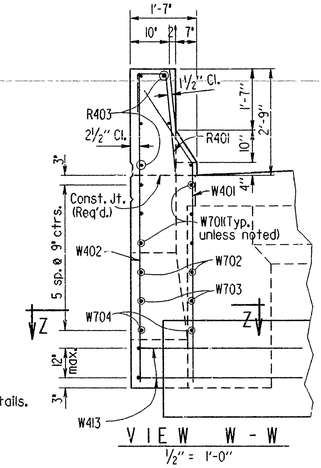

VIEW W - W

1/2" = 1'-0"

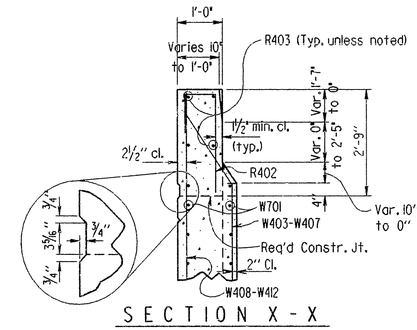

SECTION X - X

1/2" = 1'-0"

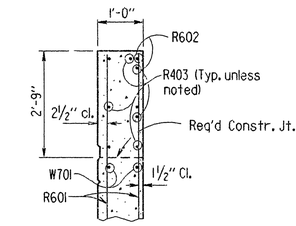

SECTION Y - Y

1/2" = 1'-0"

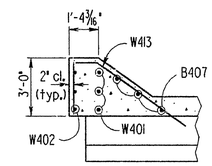

SECTION Z - Z

1/4" = 1'-0"

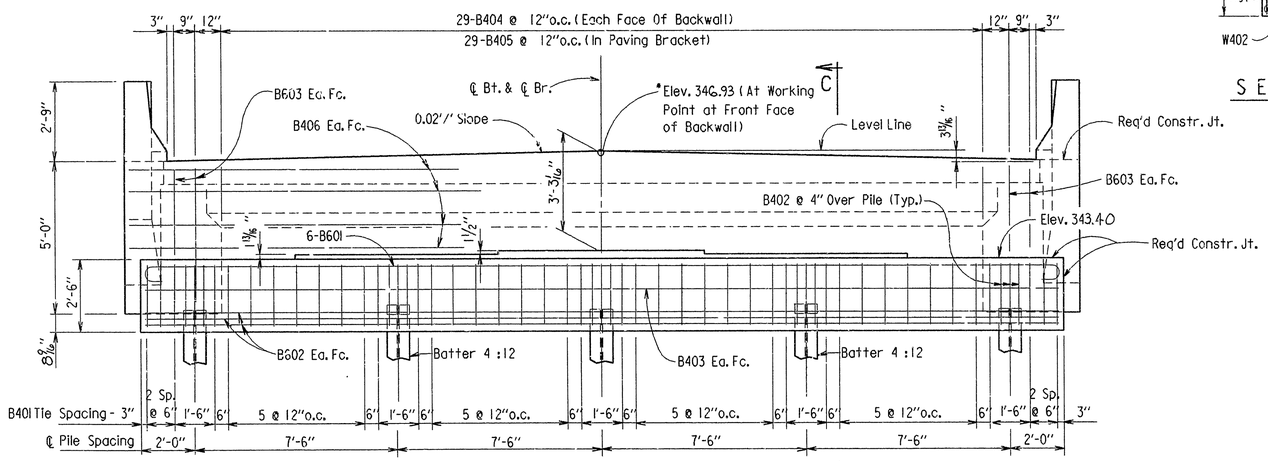

ELEVATION

BAR LIST (ONE END BT.)

Mark	No. Req'd.	Length	A	B	Pin Dia.
B401	38	9'-11"	2'-2"	2'-11"	2"
B402	15	6'-6"	2'-2"	2'-11"	2"
B403	2	33'-8"			Str.
B404	58	4'-9"			Str.
B405	29	3'-11"	1'-2"	4 1/2"	2"
B406	8	34'-10"			Str.
B407	6	3'-10"			Str.
B601	6	35'-0"	33'-8"	6"	4 1/2"
B602	6	33'-8"			Str.
B603	8	4'-9"			Str.
B604	8	7'-3"	5'-3"	1'-0"	4 1/2"
R401	8	3'-11"			2"
R402	8	4'-0"			2"
R403	12	9'-8"			Str.
R601	16	4'-5"			Str.
R602	6	5'-0"			Str.
W401	6	6'-3"	5'-1"	1'-2"	2"
W402	6	7'-5"			Str.
W403-W407	2 Ea.	Var. 3'-5" to 5'-5"	Var. 2'-3" to 4'-3"	1'-2"	2"
W408-W412	2 Ea.	Var. 4'-6" to 6'-6"			Str.
W413	4	7'-11"	1'-1"	4'-3"	2"
W701	12	9'-8"			Str.
W702	4	6'-0"			Str.
W703	4	4'-6"			Str.
W704	4	8'-4"			5 1/4"

Bending Diagrams (Dimensions are out to out of bars.)

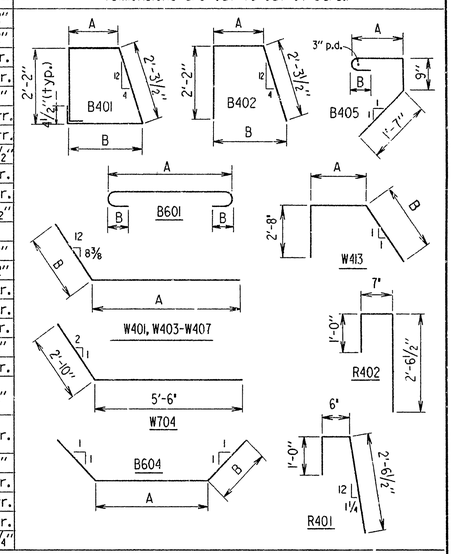

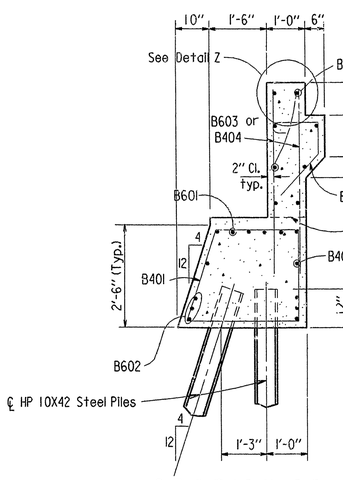

SECTION C-C

1/2" = 1'-0"

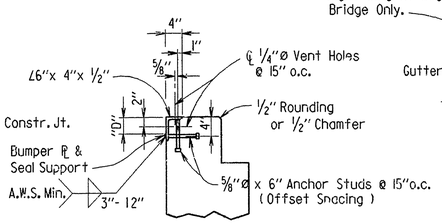

Note: For Joint Support Details & Dimension "D" see dwg. no. 30410.

DETAIL Z

3/4" = 1'-0"

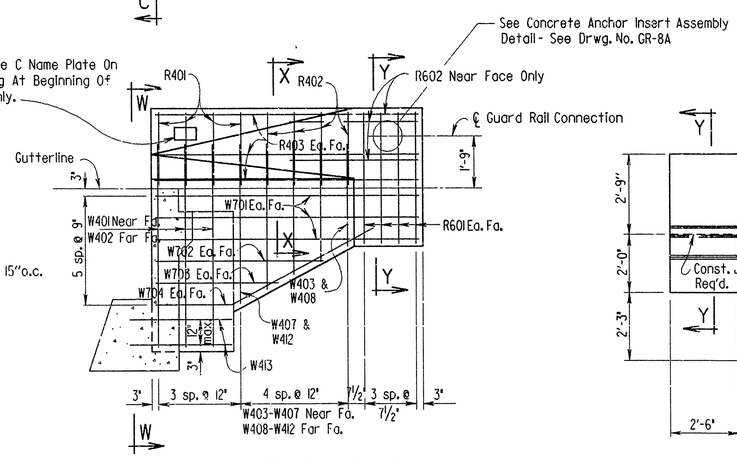

SECTION T - T

3/8" = 1'-0"

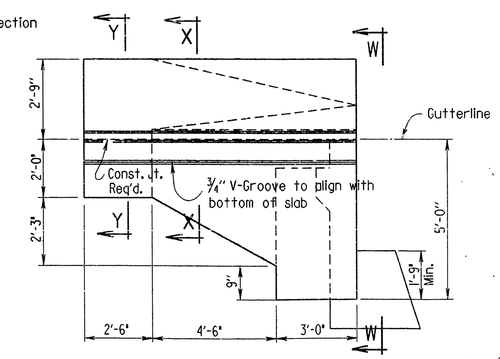

VIEW V - V

3/8" = 1'-0"

All concrete shall be Class "S" and be poured in the dry. All exposed corners to be chamfered 3/4" unless otherwise noted.

All reinforcing steel shall conform to ASTM A615 or A617, Grade 60.

Backwall shall not be poured before beams are in place.

Structural steel in end bents shall be ASTM A588 and shall be paid for as "Structural Steel in Beam Spans (A588)".

If anchor bolts are drilled into cap, top reinforcing bars shall be properly placed to avoid damage.

For additional information, see Layout.

Vernal Pinkerton
BRIDGE ENGINEER

DETAILS OF END BENTS
SOUTH FORK OZAN CREEK

ROUTE SEC.

ARKANSAS STATE HIGHWAY COMMISSION

LITTLE ROCK, ARK.

DRAWN BY: WMAJ DATE: 1-13-89
CHECKED BY: SML DATE: 1-31-89
DESIGNED BY: GEC DATE: 12-28-88
SCALE: 3/8" = 1'-0" Or As Shown

BRIDGE NO. 6332 DRAWING NO. 30405

DATE REVISED	DATE FILMED	DATE REVISED	DATE FILMED	FED. ROAD DIST. NO.	STATE	FED. AID PROJ. NO.	SHEET NO.	TOTAL SHEETS
				6	ARK.			
				JOB NO.		R30037	53	176
				1 6332		INT. BENT	30406	

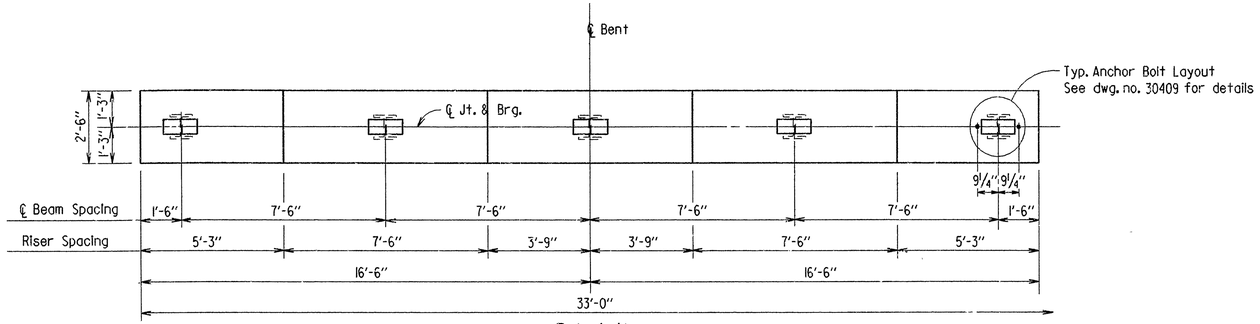

PLAN

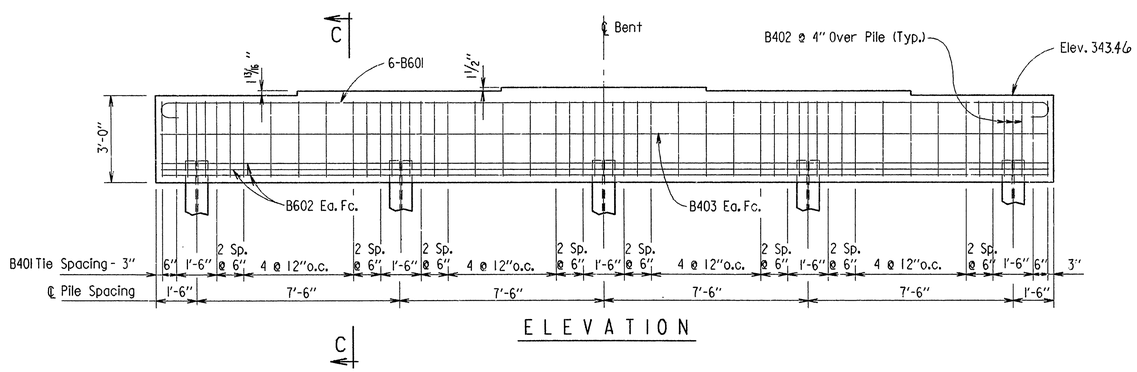

ELEVATION

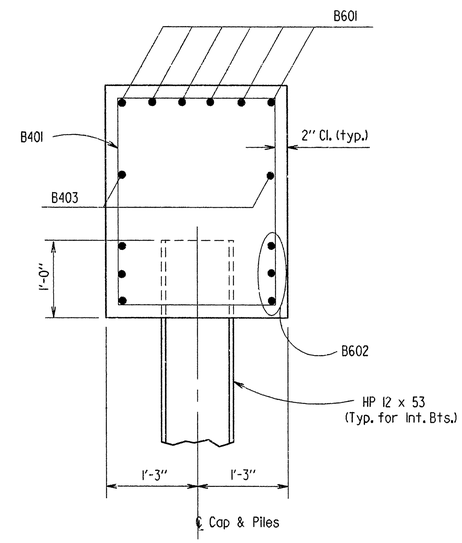

SECTION C-C
1" = 1'-0"

BAR LIST (ONE INT. BENT)

Mark	No. Req'd.	Length	Pin Dia.
B401	40	10'-0"	2"
B402	15	7'-4"	2"
B403	2	32'-8"	Str.
B601	6	34'-0"	4½"
B602	6	32'-8"	Str.

Bending Diagrams (Dimensions are out to out of bars.)

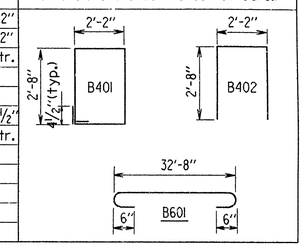

All concrete shall be Class "S" and be poured in the dry. All exposed corners to be chamfered ¾" unless otherwise noted.

All reinforcing steel shall conform to ASTM A615 or A617, Grade 60.

If anchor bolts are drilled into cap, top reinforcing bars shall be properly placed to avoid damage.

For additional information, see Layout.

Verl Pinkerton
BRIDGE ENGINEER

DETAILS OF INT. BENTS
SOUTH FORK OZAN CREEK

ROUTE SEC.

ARKANSAS STATE HIGHWAY COMMISSION

LITTLE ROCK, ARK.

DRAWN BY: W.MAJ DATE: 1-17-89
CHECKED BY: SML DATE: 1-31-89
DESIGNED BY: GEC DATE: 12-28-88
SCALE: ⅜" = 1'-0" Or As Shown

BRIDGE NO. 6332 DRAWING NO. 30406

DATE REVISED	DATE FILMED	DATE REVISED	DATE FILMED	FED. ROAD DIST. NO.	STATE	FED. AID PROJ. NO.	SHEET NO.	TOTAL SHEETS
				6	ARK.			
				JOB NO.		R30037	54	176
				① 6332		CONT. W-BEAM UNIT		30407

Note: Boiled Linseed Oil Treatment shall be applied to the Roadway Surface and the Face and Top of Concrete Parapet Rail.

Note: At Contractor's Option, in lieu or providing bar S501, one #5 bar top and bottom may be substituted. Payment will be based on the weight of bar S501.

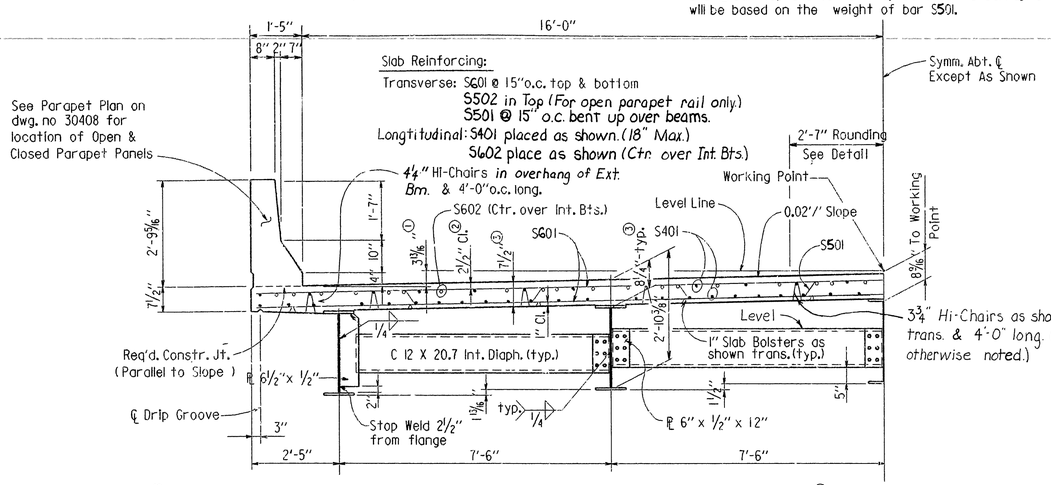

① Working Point to Gutter Line

② Tolerance: Minus = ¼"
Plus: Equal to amount of slab thickening used to meet slab thickness tolerance-See Detail B on drwg. no. 30410.

③ See Detail B, drwg. no. 30410.

HALF-SECTION NEAR MIDSPAN

½" = 1'-0"

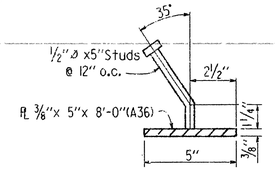

DETAIL Z

N.T.S.

Note:
The surfaces of the ⅜" Plates which will not be in contact with concrete shall receive two coats of paint in the shop. These coats shall be those specified as Shop Prime Coat and Finish Coat in section 638 or as approved by the Engineer. Painting will not be paid for directly, but will be included in the item of Structural Steel.

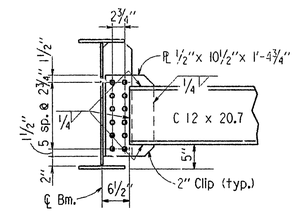

Note: Bolts in Diaphragm Connections shall be properly installed and tightened in accordance with Subsection 807.22 of the Standard Specifications.

DIAPHRAGM CONNECTIONS AT EXTERIOR BEAMS

N.T.S.

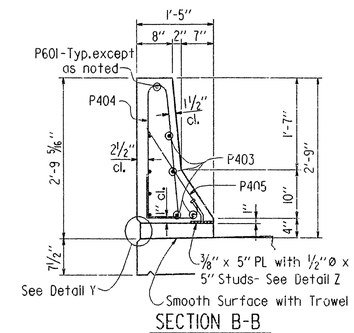

SECTION B-B

¾" = 1'-0"

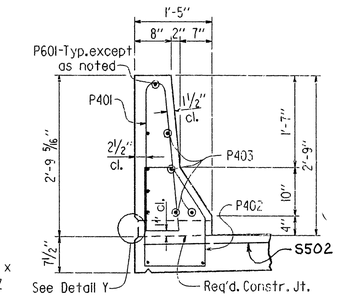

SECTION C-C

¾" = 1'-0"

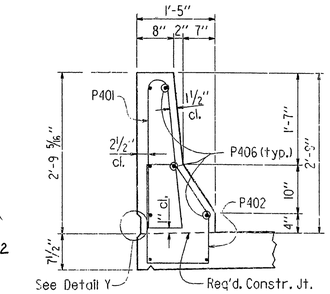

SECTION D-D

¾" = 1'-0"

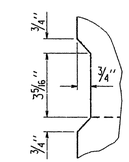

DETAIL Y

N.T.S.

General Notes

All structural steel shall be ASTM designation A588 unless otherwise noted and shall be paid for at the unit price per pound bid for "Structural Steel in Beam Spans (A588)." A588 steel shall not be painted. All exposed surfaces to be cleaned in accordance with Subsection 807.67(e) of the Standard Specifications. Structural steel completely embedded in concrete may be ASTM A36.

Beams are considered main load carrying members and shall meet the Longitudinal Charpy V-Notch Test specified in section 807.05 of the Standard Specifications.

All beams shall be blocked in their true position in the Shop. The camber, length of sections, distance between bearings and openings of joints shall be me[illegible]d with the beams in this position and this information shall become a part o[illegible] permanent record of the Job. The component parts shall be match ma[illegible] this assembly and these marks shall be shown on the erection diagram. All be[illegible] dimensions are based on a temperature of 60°F. A tolerance of ±¼" is allowed for camber.

Design Specifications: AASHTO 1989 with Interim Specifications.

Live Loading: HS20 — Method of Design: Load Factor

Dead Load:	Interior Beam	Exterior Beam
A. To W-Beam	709 plf + 1.3 (Wt./Ft. of W-Bm.)	572 plf + 1.3 (Wt./Ft. of W-Bm.)
B. To Composite Beam		
Open Parapets	295 plf*	295 plf*
Closed Parapets	309 plf*	309 plf*
Live Load: To Each Composite Beam	1.364 Wheels + Impact	1.277 Wheels + Impact

*Includes 154 plf Future Wearing Surface

Material Strength:

Class S(AE) Concrete (n=8)	f'c = 4000 psi
Reinforcing Steel (A615 or A617)	FY = 60,000 psi
Structural Steel (A36)	FY = 36,000 psi
Structural Steel (A588)	FY = 50,000 psi

Expansion Device:

Rdwy. C 15 x 33.9
Conn. L's 7"x 4"x ½"x 8"
Detail Device ⅛" high & provide ¼" Shims using 2- 1/16" & 1- ⅛" PLs

⅝"Ø x 8" Studs @ 12" o.c. (Top & Bottom)
For Details of Bumper PL & Seal Support, see drwg. no. 30410.

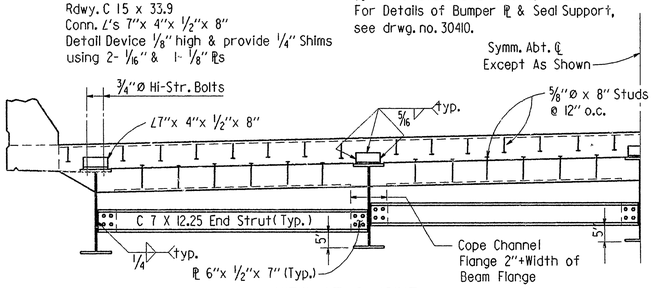

VIEW AT ℄ JOINT

½" = 1'-0"

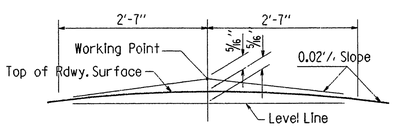

NOTE: Working Point matches Theoretical Roadway Grade.

ROUNDING DETAIL

N.T.S.

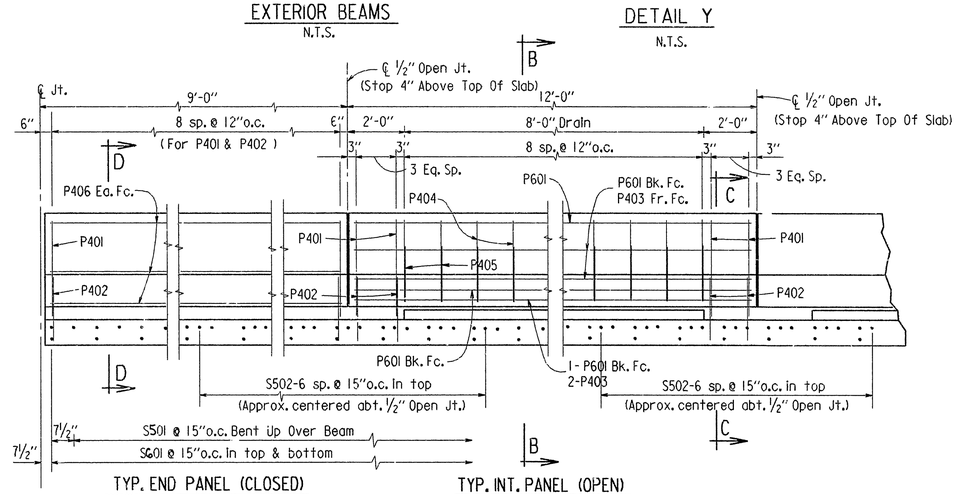

LONGITUDINAL SECTION AT CURB FOR OPEN & CLOSED PARAPET RAIL

½" = 1'-0"

Note: Concrete in Bridge Superstructure shall be placed and consolidated for the entire pour before any concrete has taken its initial set. This may require the use of a retarding agent.

BAR LIST

MK	No. Req'd.	Length	Pin Dia.
S401	280	38'-9"	Str.
S501	119	35'-4"	3"
S502	168	4'-4"	Str.
S601	240	34'-6"	Str.
S602	76	23'-0"	Str.
P401	212	6'-4"	2"
P402	212	5'-6"	2"
P403	88	11'-6"	Str.
P404	198	5'-10"	2"
P405	198	3'-2"	2"
P406	24	8'-6"	Str.
P601	110	11'-6"	Str.

Bending Diagrams (Dimensions are out to out of bars.)

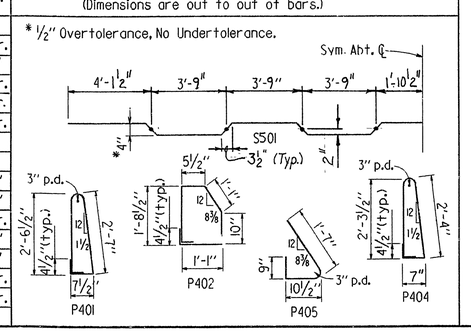

(SHEET 1 OF 4)

DETAILS OF 150'-0" CONT. COMP. W-BEAM UNIT SOUTH FORK OZAN CREEK

ROUTE SEC.

ARKANSAS STATE HIGHWAY COMMISSION

LITTLE ROCK, ARK.

DRAWN BY: W.M.J. DATE: 1-10-89
CHECKED BY: SML DATE: 1-31-89
DESIGNED BY: GEC DATE: 11-15-88
SCALE: As Shown

BRIDGE ENGINEER

BRIDGE NO. 6332 DRAWING NO. 30407

DATE REVISED	DATE FILMED	DATE REVISED	DATE FILMED	FED. ROAD DIST. NO.	STATE	FED. AID PROJ. NO.	SHEET NO.	TOTAL SHEETS
				6	ARK.			
				JOB NO.		R30037	55	176
				(1) 6332		CONT. W-BEAM UNIT		30408

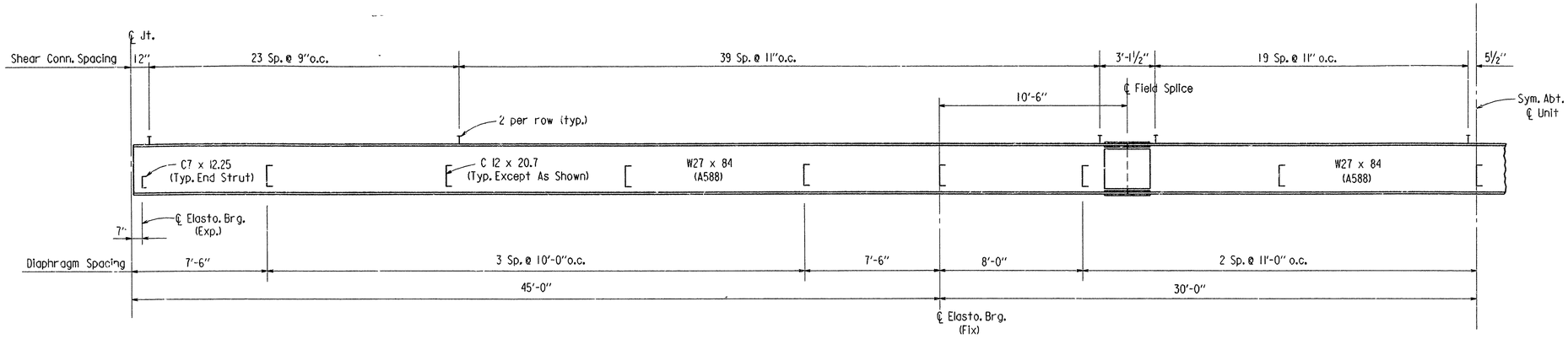

BEAM ELEVATION

N.T.S.

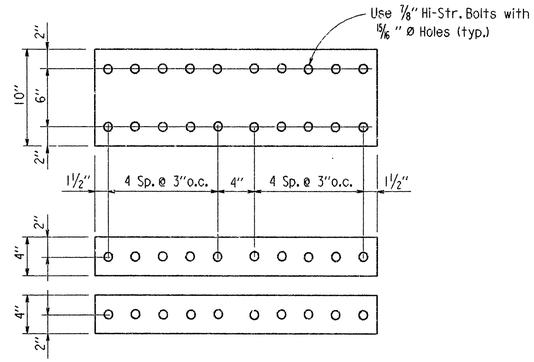

FLANGE SPLICE PLATES

1½" = 1'-0"

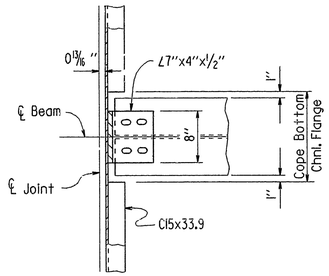

CHANNEL CONNECTION DETAIL

N.T.S.

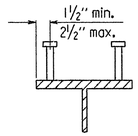

Stud Shear Connectors shown shall be ⅞"Ø x 4" long, granular flux filled, solid fluxed or equal, and automatically end welded to the beam flange in accordance with the recommendations of the Manufacturer. ¾"Ø studs may be used in place of the ⅞"Ø studs shown, at the ratio of 1.361 -¾"Ø studs in place of one ⅞"Ø stud. ⅞"Ø studs will be used as basis for measurement of structural steel in shear connectors. Maximum stud spacing = 24".

SHEAR CONNECTOR DETAIL

N.T.S.

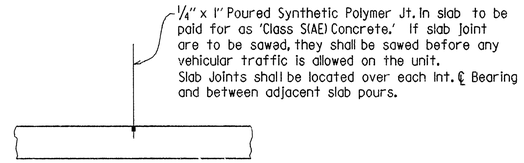

SLAB JOINT DETAIL

N.T.S.

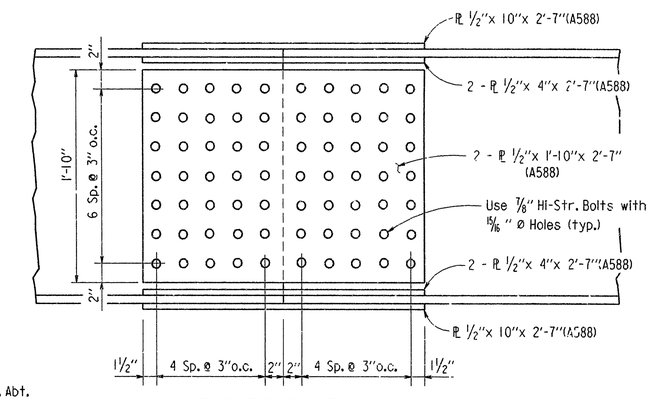

TYP. FIELD SPLICE

1½" = 1'-0"

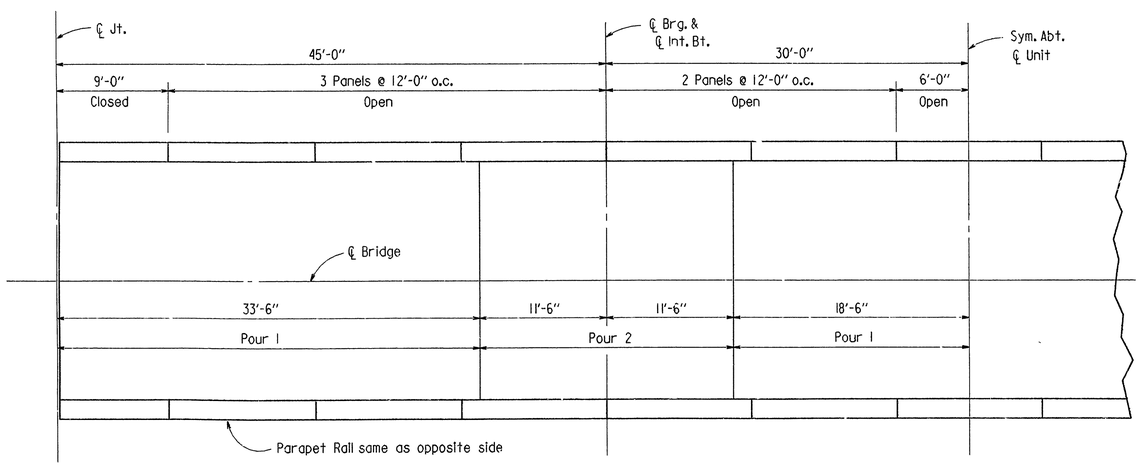

SLAB POURING SEQUENCE & PARAPET PLAN

N.T.S.

Note: Pours with the same number may be placed simultaneously or separately. All Pours (1) must be placed before Pours (2) can be placed. 48 hours shall elapse between pours and 72 hours shall elapse between adjacent pours. Any rolling pours made before the entire slab unit has been placed must be approved by the Bridge Engineer.

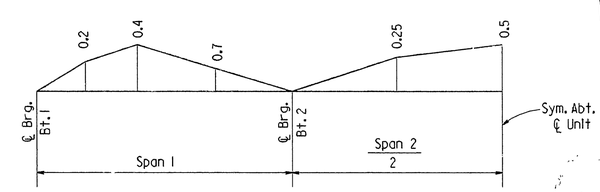

DEAD LOAD DEFLECTION DIAGRAM (TYP.)

TABLE OF DEFLECTIONS

	Point Of Deflection	Interior Beam			Exterior Beam		
		Beam & Diaphragm	Beam, Diaphr. & Slab	Beam, Diaphr., Slab & Parapet	Beam & Diaphragm	Beam, Diaphr. & Slab	Beam, Diaphr., Slab & Parapet
Sp. 1	0.2	0.027"	0.209"	0.224"	0.025"	0.175"	0.198"
	0.4	0.037"	0.291"	0.311"	0.035"	0.244"	0.276"
	0.7	0.019"	0.138"	0.148"	0.017"	0.115"	0.132"
Sp. 2	0.25	0.051"	0.418"	0.453"	0.049"	0.351"	0.405"
	0.5	0.087"	0.706"	0.763"	0.083"	0.592"	0.681"

Note: Camber for Total Dead Load Deflection plus ±¼" tolerance.

(SHEET 2 OF 4)

DETAILS OF 150'-0" CONT. COMP. W-BEAM UNIT SOUTH FORK OZAN CREEK

ROUTE SEC.

ARKANSAS STATE HIGHWAY COMMISSION

LITTLE ROCK, ARK.

Kirk Pinkerton
BRIDGE ENGINEER

DRAWN BY: W.M.H. DATE: 1-11-89
CHECKED BY: SML DATE: 2-1-89
DESIGNED BY: GEC DATE: 11-15-88
SCALE: As Shown

BRIDGE NO. 6332 DRAWING NO. 30408

DATE REVISED	DATE FILMED	DATE REVISED	DATE FILMED	FED. ROAD DIST. NO.	STATE	FED. AID PROJ. NO.	SHEET NO.	TOTAL SHEETS
				6	ARK.			
				JOB NO.		R30037	56	176
				(1) 6332		CONT. W-BEAM UNIT		30409

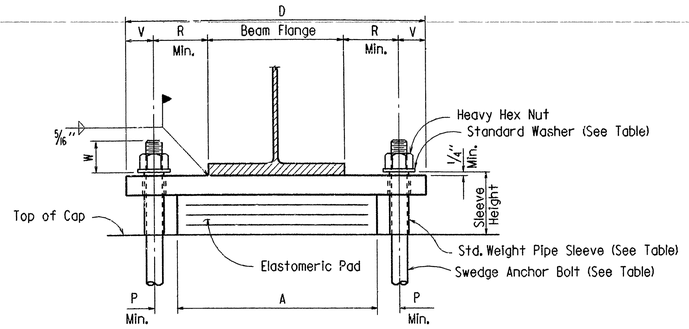

FRONT VIEW

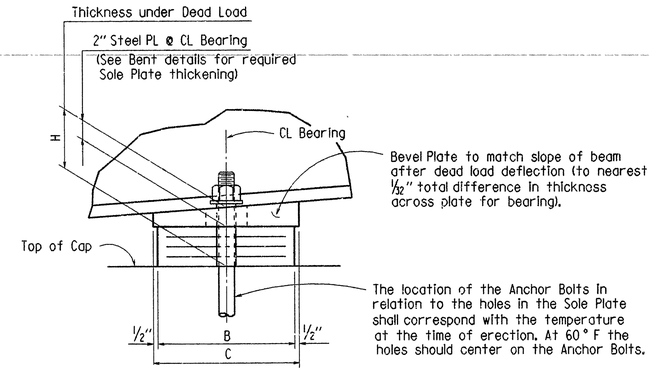

SIDE VIEW

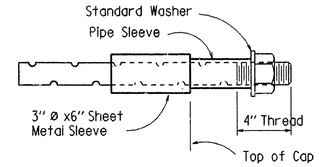

ANCHOR BOLT DETAIL

NOTE: Anchor Bolts may be cast in place or drilled and grouted into place. If Anchor Bolts are to be drilled and grouted into place, the 3" Ø x6" Galvanized Sheet Metal Sleeve shall be cast in place as shown. It shall be dry packed with styrofoam or urethane foam or approved equal prior to pouring concrete. After pouring of the cap and prior to erection of Structural Steel, the dry pack shall be removed and holes for the anchor bolts shall be accurately drilled into the masonry. The bolts shall then be set and fixed with Portland Cement grout or an approved non-shrink grout, completely filling the holes.

If anchor bolts are to be cast in place, the 3" Ø x6" Galvanized Sheet Metal Sleeve will not be required. Galvanized Sheet Metal Sleeves are to be considered subsidiary to the item "Structural Steel in Beam Spans (A588)".

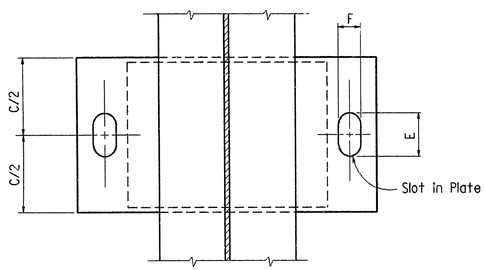

PLAN VIEW

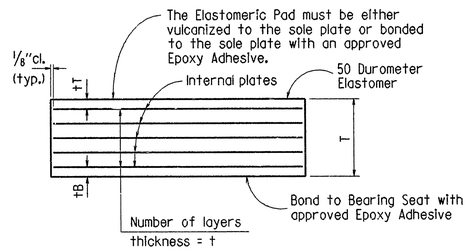

ELASTOMERIC PAD

TABLE OF ANCHOR BOLT VARIABLES

ANCHOR BOLT DIAMETER	PIPE SLEEVE NOMINAL DIAMETER	STANDARD WASHER SIZE (O.D.)	MINIMUM EMBEDMENT LENGTH	SLOT WIDTH "F"	P Min.	R Min.	V	W
1"	1 1/4"	2 1/2"	10"	2" Ø	2"	2"	2 1/2"	1 1/2"
1 1/4"	1 1/4"	3"	12"	2" Ø	2"	2 1/4"	2 1/2"	1 3/4"
1 1/2"	1 1/2"	3 1/2"	15"	2 1/4" Ø	2 1/4"	2 1/2"	2 3/4"	2"
1 3/4"	2"	4"	18"	2 5/8" Ø	2 1/2"	2 3/4"	3"	2 1/4"
2"	2 1/2"	4 1/2"	20"	3 1/8" Ø	2 3/4"	3"	3 1/4"	2 1/2"
2 1/4"	2 1/2"	4 3/4"	23"	3 1/8" Ø	2 3/4"	3"	3 1/4"	2 3/4"
2 1/2"	3"	5"	25"	3 3/4" Ø	3"	3 1/4"	3 1/2"	3"

GENERAL NOTES

Pipe Sleeves shall be ASTM A53, Grade B, and shall be galvanized to conform to ASTM A153. Sleeves shall be paid for at the unit price bid for "Structural Steel in Beam Spans (A588)".

Anchor Bolts, Nuts and Washers shall be ASTM A36 Steel Galvanized to conform to ASTM A153 and shall be paid for at the unit price bid for "Structural Steel in Beam Spans (A588)".

Sole Plates shall be ASTM A588 Steel. Sole plates will not be paid for directly, but will be considered as part of the item "Elastomeric Bearings."

A588 Sole Plates shall be cleaned in accordance with Subsection 807.67(e).

Elastomeric Pads shall conform to Section 808 of the Standard Specifications and shall be paid for at the unit price bid for "Elastomeric Bearings."

TABLE OF VARIABLES

LOCATION	BEARING TYPE	NO. of BRGS. EACH BENT	H	A	B	T	tT	tB	NO. & THICKNESS FOR (t)	NO. & THICKNESS OF INTERNAL PL	C	D	E	ANCHOR BOLT SIZE	SLEEVE HEIGHT
Bt. 1 & 4	Exp.	5	4 3/8"	9 1/2"	7 1/2"	2 7/16"	1/8"	1/8"	8 @ 3/16"	9 @ 14 Ga.	8 1/2"	19 1/2"	3"	1 1/4" Ø x 19"	4 5/8"
Bt. 2 & 3	Fix	5	3 5/8"	14"	8"	1 5/8"	1/8"	1/8"	5 @ 3/16"	6 @ 14 Ga.	9"	24"	2 1/4"	1 1/2" Ø x 21"	3 7/8"

Tabular Data by : W.M.A.J. Date: 1-11-89

Checked by : SML Date: 2-1-89

Vernal Pinkerton

BRIDGE ENGINEER

(SHEET 3 OF 4)

DETAILS OF

150'-0" CONT. COMP. W-BEAM UNIT

SOUTH FORK OZAN CREEK

ROUTE SEC.

ARKANSAS STATE HIGHWAY COMMISSION

LITTLE ROCK, ARK.

DRAWN BY: L.M. DATE: 4-1-88

CHECKED BY: D.H.P. DATE: 4-13-88

DESIGNED BY: STD. DATE:

SCALE: NONE

BRIDGE NO. 6332 DRAWING NO. 30409

DATE REVISED	DATE FILMED	DATE REVISED	DATE FILMED	FED. ROAD DIST. NO.	STATE	FED. AID PROJ. NO.	SHEET NO.	TOTAL SHEETS
				6	ARK.			
				JOB NO.		R30037	57	176
				(1) 6332		CONT. W-BEAM UNIT		30410

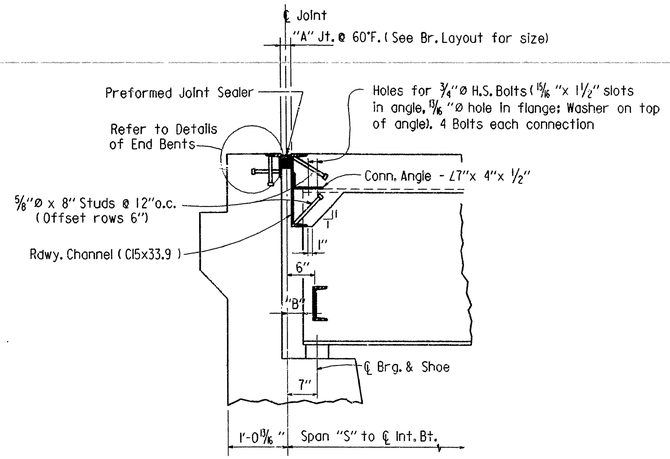

JOINT AT END BENTS

3/4" = 1'-0"

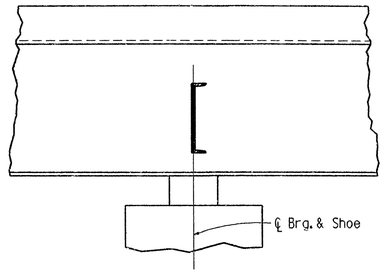

℄ BRG. AT INTERMEDIATE BENTS

3/4" = 1'-0"

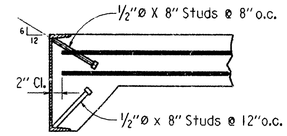

Note: As an alternate to 5/8"Ø studs, 1/2"Ø x 8" studs spaced as shown may be used. Use weight of 5/8"Ø stud as basis of measurement of structural steel in anchors.

DETAILS OF ALTERNATE ANCHORS

1" = 1'-0"

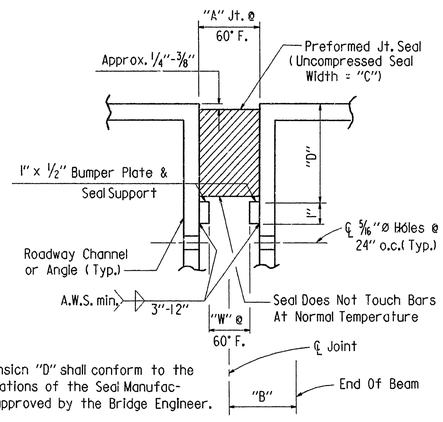

Note: Dimension "D" shall conform to the recommendations of the Seal Manufacturer as approved by the Bridge Engineer.

DETAIL OF JOINT SEAL & SUPPORT

N.T.S.

Note: The Seal shall be in one piece (without splices) for the full length of the Joint, except that lengths 55 feet and longer may have a factory made splice. Splices, when required, shall be shown on the Shop Drawings and shall be placed near the high ends of the Roadway. Separation of the Splice during installation shall be cause for rejection of the Seal.

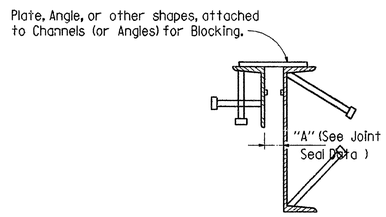

Note: Each expansion joint device shall be blocked in the Shop by the Fabricator to the dimension "A", and the blocking details shall be shown on the Shop Drawings. The blocking shall not be removed until the Slab on one side is complete. Blocking shall be placed within 2 feet of each end of the device and with a maximum spacing of 8 feet. Removal shall be just before or after pouring the second side of the joint, as directed by the Engineer.

DETAILS FOR BLOCKING EXPANSION JOINT DEVICE

1 1/2" = 1'-0"

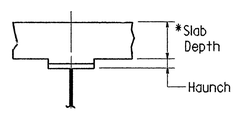

Haunch is required. Slab may be thickened and/or the haunch thickened to maintain slab tolerance.

DETAIL B

*Thickness as detailed on Span Drawings. Tolerance is minus 1/4" and plus 1".

Note: No increase in concrete and structural steel quantities will be made to meet slab tolerances.

ADJUSTMENT FOR SLAB THICKNESS TOLERANCE

N.T.S.

JOINT SEAL DATA

"A" Joint Width Perpendicular To Joint @ 60°F*	"B" Perpendicular To Joint	"C" Uncompressed Seal Width	"W" Width Between Plates	Bumper Plate Size
1 5/8"	2 1/8" ±	2 1/2"	5/8"	1" x 1/2"

*Installation is limited to 40°F. min. and 80°F. max.

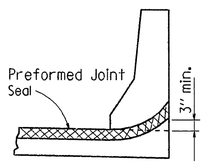

JOINT SEAL PLACEMENT AT CURB

N.T.S.

TABLE FOR WELD

Material Thickness Of Thicker Part Joined (Inches)	Minimum Size Of Fillet Weld (Inches)	Single Pass Weld Must Be Used
To 1/2" Inclusive	3/16"	
Over 1/2" to 3/4"	1/4"	
Over 3/4"	5/16"	

Note: When a fillet weld size, as shown on the Plans, is larger than the minimum, the First Pass shall be that specified for minimum size of fillet weld.

GENERAL NOTES

Governing specifications are the Arkansas State Highway and Transportation Department Standard Specifications for Highway Construction, 1991 edition, with applicable supplemental specifications and special provisions.

All concrete shall be Class S(AE) and shall be poured in the dry. All exposed corners to be chamfered 3/4" unless otherwise noted. A minimum of 72 hours shall elapse between completion of the slab and the pouring of the parapet railing. Concrete shall be placed and consolidated for the entire pour before any concrete has taken its initial set. This may require the use of a retarding agent.

The bridge deck shall be given a tine finish as specified for final finishing in subsection 802.20 for a Class 5 Roadway Surface Finish.

Reinforcing steel shall conform to ASTM A615 or A617, Grade 60. The reinforcing is to be accurately located in the forms and firmly held in place by steel wire supports, sufficient in number and size to prevent displacement during the course of construction. The wire supports will not be paid for directly but will be considered subsidiary to the item 'Reinforcing Steel'.

All structural steel shall be ASTM A588 unless noted otherwise.

All structural steel except ASTM A588 and galvanized steel shall be painted. Painting shall conform to subsection 807.58 unless span details or applicable special provisions note otherwise.

All longitudinal beams and cover plates are considered main load carrying members. All welding shall conform to Subsection 807.24. Welded connections shall be 5/16" fillet shop welds unless otherwise noted. All welding that is to be done during fabrication of structural steel, including temporary welds, shall be detailed on the shop drawings and submitted for approval. If the contractor or erector should want to make additional welds, whether temporary or permanent, he shall submit detailed drawings with formal request to the Bridge Engineer of the Arkansas State Highway and Transportation Department for approval.

All stud shear connectors shall be granular flux filled, solid fluxed, or equal, and shall be automatically end welded in accordance with recommendations of the manufacturer.

Field connections shall be bolted with 3/4" high strength bolts. Unless otherwise noted, bolt holes shall be 13/16"Ø except that 15/16"Ø holes may be used for connection of expansion devices, diaphragms, and end struts if a washer is used under both the nut and head of the bolt.

Diaphragms shall be installed as beams are erected and shall be completely bolted prior to pouring of the concrete deck.

Bearings shall be seated in accordance with Subsection 807.51 of the Standard Specifications. This work and material are to be considered as subsidiary to the item "Structural Steel in Beam Spans" and will not be paid for directly.

Drawings show general features of design only. Shop drawings shall be made in accordance with the specifications, submitted and approval secured before any fabrication is begun. Structural shapes of equal or greater strength may be substituted for shapes shown if approval is obtained from the bridge engineer. Payment will be made on the basis of shapes shown.

Kirsal Pinkerton
BRIDGE ENGINEER

(SHEET 4 OF 4)

DETAILS OF 150'-0" CONT. COMP. W-BEAM UNIT SOUTH FORK OZAN CREEK

ROUTE SEC.

ARKANSAS STATE HIGHWAY COMMISSION

LITTLE ROCK, ARK.

DRAWN BY: W.M.A.J. DATE: 1-13-89
CHECKED BY: SML DATE: 2-1-89
DESIGNED BY: GEC DATE: 11-15-88
SCALE: 3/16" = 1" or as noted

BRIDGE NO. 6332 DRAWING NO. 30410