DATE REVISED	DATE FILMED	DATE REVISED	DATE FILMED	FED. ROAD DIST. NO.	STATE	FED. AID PROJ. NO.	SHEET NO.	TOTAL SHEETS
				6	ARK.			
				JOB NO.		3922	18	80

① 6413 —LAYOUT— 32112

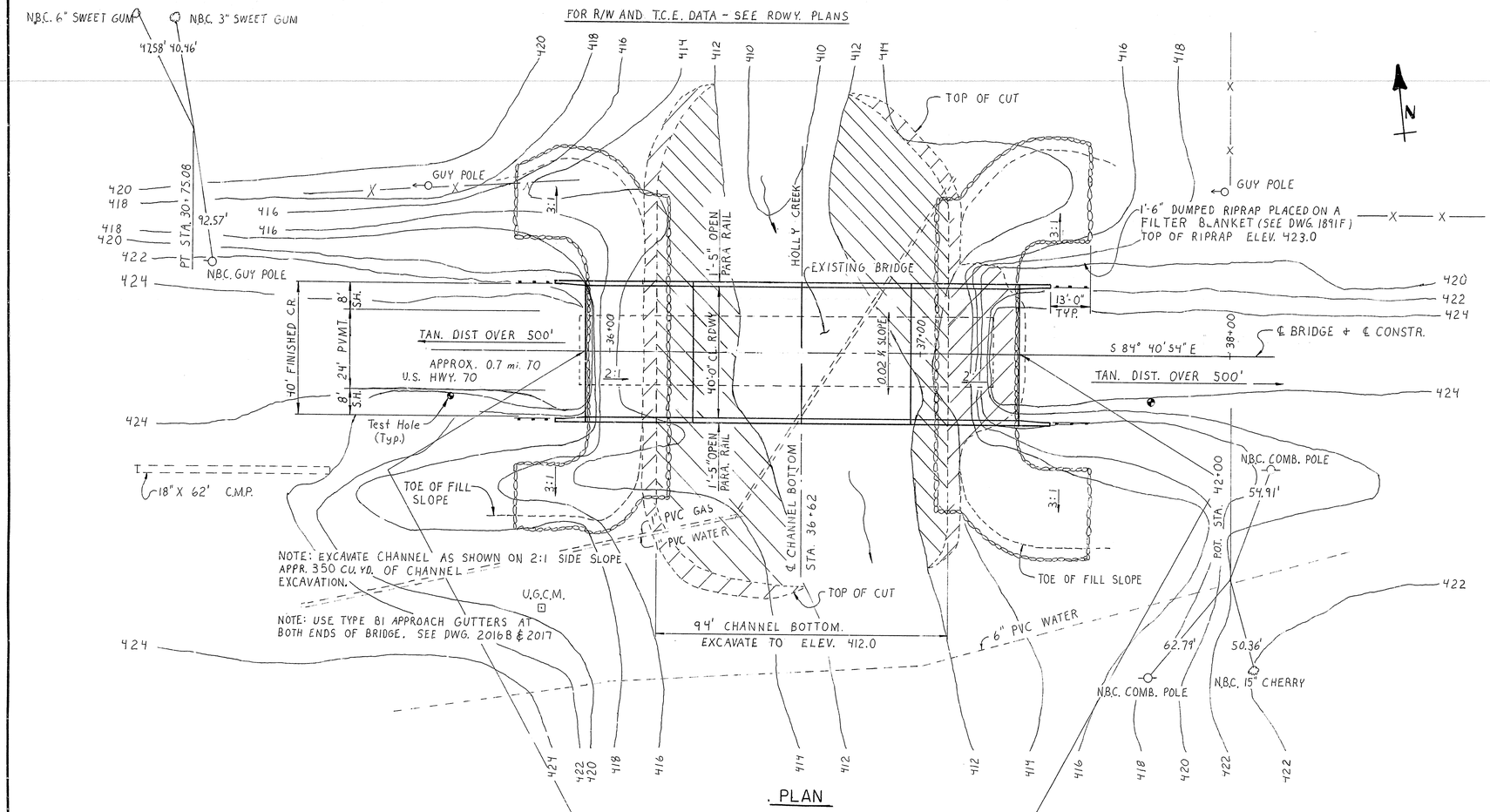

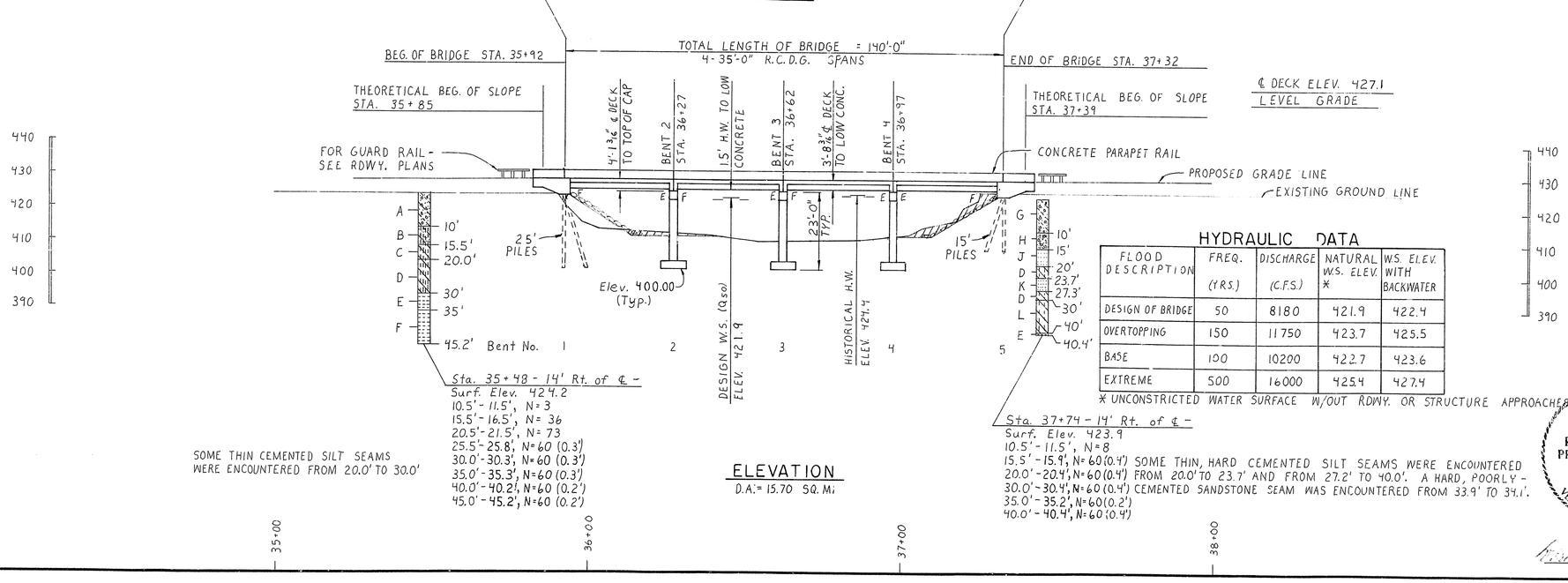

HYDRAULIC DATA

FLOOD DESCRIPTION	FREQ. (YRS.)	DISCHARGE (C.F.S.)	NATURAL W.S. ELEV. *	W.S. ELEV. WITH BACKWATER
DESIGN OF BRIDGE	50	8180	421.9	422.4
OVERTOPPING	150	11750	423.7	425.5
BASE	100	10200	422.7	423.6
EXTREME	500	16000	425.4	427.4

* UNCONSTRICTED WATER SURFACE W/OUT RDWY. OR STRUCTURE APPROACHES

GENERAL NOTES

BENCH MARK: Chiseled square painted red on S.W. corner of bridge over Holly Creek, 12' right of center line Sta. 35+90, Elev. 424.94.

CONSTRUCTION SPECIFICATIONS: Arkansas State Highway and Transportation Department Standard Specifications for Highway Construction, 1991 edition, with applicable supplemental specifications and special provisions.

DESIGN SPECIFICATIONS: AASHTO Standard Specifications for Highway Bridges, 1989 with current interim specifications.

LIVE LOADING: HS20 METHOD OF DESIGN: Load Factor

SEISMIC PERFORMANCE CATEGORY: A

MATERIALS AND STRENGTHS:

Class S(AE) Concrete (superstructure)	f'c = 4,000 psi
Class S Concrete (substructure)	f'c = 3,500 psi
Reinforcing Steel (A615 or A617, GR. 60)	Fy = 60,000 psi
Structural Steel (A36)	Fy = 36,000 psi

BORING LOGS: Boring logs may be obtained from the Programs and Contracts Division.

STEEL PILING: Piling in Bents 1 and 5 shall be HP 10x42 and shall be driven with an approved air, steam, or diesel hammer to a minimum safe bearing capacity of 44 tons per pile and to a minimum penetration of 10' below natural ground. Lengths of piling shown are for estimating quantities and for use in determining payment for cut-off and build-up in accordance with the standard specifications. Piles in end bents to be driven after embankment to bottom of cap is in place.

FOOTINGS: Footings shall be set at a max. elev. of 400.00 and a minimum of 0.5' into very hard Silty Clay or poorly-cemented Sandstone. Foundations for footings shall be prepared in accordance with Section 801.04 of the Standard Specification.

BRIDGE DECK: The concrete bridge deck shall be given a tine finish as specified for final finishing in subsection 802.20 for Class 5 Bridge Roadway Surface Finish.

BOILED LINSEED OIL: Boiled linseed oil treatment shall be applied to the roadway surface and to the face and top of the concrete parapet rail.

DETAIL DRAWINGS:

	DRAWING NO.
End Bents	32113
Intermediate Bents	32114
35'-0" R.C.D.G. spans	32115
Steel Piling	14995A
Type C Bridge Name Plate	2389A
Embankment Construction	1888A
Dumped Riprap and Filter Blanket	1891F
Computing Excavation for Structures	1891F
Approach Slabs and Gutters	2016B & 2017
Temporary Bridge Structure	2391, 2391A & 2392

EXISTING BRIDGE: The existing bridge No. 3132 (log mile 0.68) is 25.5' wide and 133' long and consists of concrete precast slabspans supported by a concrete substructure. The existing bridge is located at the proposed bridge.

REMOVAL AND SALVAGE: The existing bridge (3132) shall be removed in accordance with section 205 of the Standard Specifications. All material from the existing bridge shall become the property of the contractor except precast slab spans and bridge railing.

TEMPORARY BRIDGE: Construct a 105' long temporary bridge approximately 45' upstream. The temporary bridge shall have a minimum roadway width of 20', a minimum live load capacity of H15 and a minimum deck elevation of 421.9. See section 603 of the Standard Specifications. See drawing numbers 2391, 2391A and 2392 for standard temporary bridge details. If timber piling and pine timber are used on this temporary bridge structure, the materials shall be treated with a preservative according to the standard specifications. See roadway plans for actual detour grade and alignment.

BORING LEGEND

A. Moist, Loose, Brown and Gray Clayey Sand and Gravel.
B. Wet, Very Loose, Brown and Gray Silty, Clayey Sand.
C. Moist, Hard, Brown and Gray Silty Clay.
D. Moist, Very Hard, Brown and Gray Silty Clay.
E. Medium Hard, Brown and Gray Highly Weathered Shale.
F. Medium Hard, Gray Weathered Shale.
G. Moist, Loose, Brown Clayey Sand and Gravel.
H. Moist, Loose, Brown Silty Sand, Gravel and Cobbles.
J. Medium Hard, Brown Poorly-Cemented Sandstone.
K. Hard, Brown Poorly-Cemented Sandstone
L. Moist, Very Hard, Brown and Gray to Brown Silty Clay.

LAYOUT OF BRIDGE OVER HOLLY CREEK DIERKS-CENTER POINT BRS. AND APPRS. HOWARD COUNTY

ROUTE 4 SEC. 3

ARKANSAS STATE HIGHWAY COMMISSION

LITTLE ROCK, ARK.

STATE OF ARKANSAS REGISTERED PROFESSIONAL ENGINEER No. 1779 VERAL PINKERTON

BRIDGE ENGINEER

DRAWN BY: JWT DATE: 8-14-90
CHECKED BY: CJF DATE: 2-21-91
DESIGNED BY: DFL DATE: 8-7-90
SCALE: 1" = 20'

BRIDGE NO. 6413 DRAWING NO. 32112

DATE REVISED	DATE FILMED	DATE REVISED	DATE FILMED	FED. ROAD DIST. NO.	STATE	FED. AID PROJ. NO.	SHEET NO.	TOTAL SHEETS
				6	ARK.			
				JOB NO.		3922	19	80

(1) END BENT

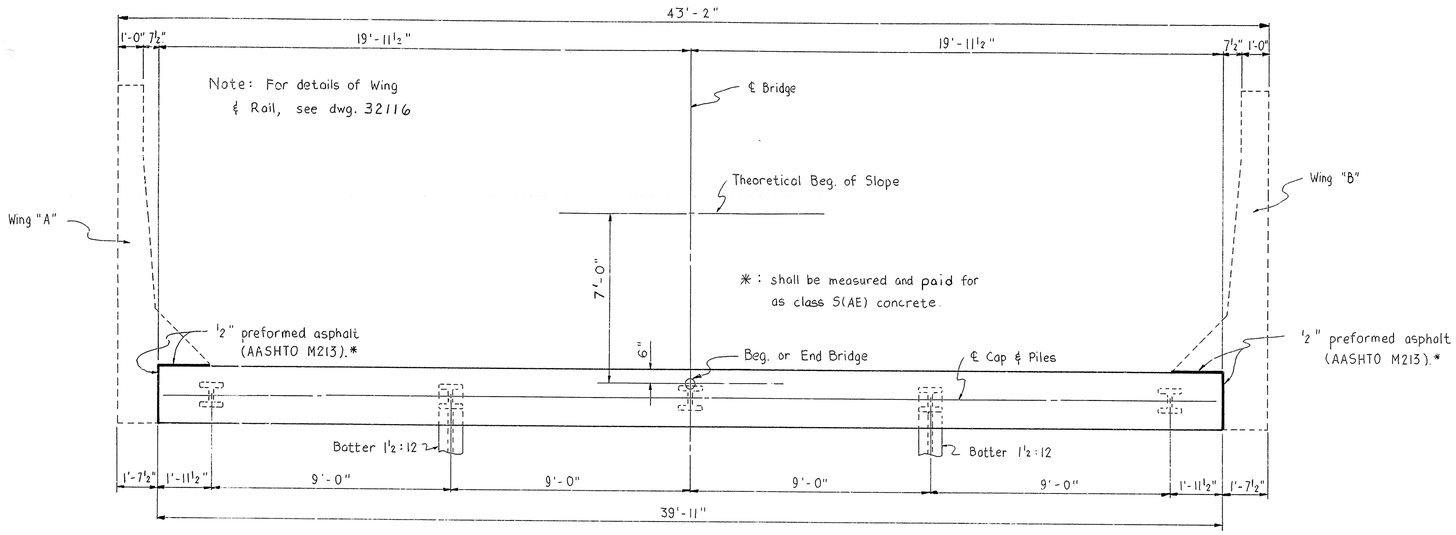

PLAN OF END BENT

BAR LIST

MARK	No. Req'd. End Bt.		Length	Pin Dia.
B401	50		7'-11"	2"
B402	15		5'-9"	2"
B403	2		39'-7"	Str.
D400	27		2'-6"	Str.
B601	6		40'-11"	4½"
B602	6		39'-7"	Str.

Bending Diagram

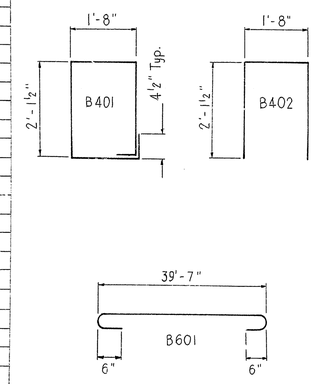

Dimensions are out to out of bars.

END BENT NOTES

All concrete shall be Class ''S'' with a minimum 28 day compressive strength f'c = 3,500 psi. Concrete shall be poured in the dry and all exposed corners to be chamfered 3/4'' unless otherwise noted.

All reinforcing steel shall conform to ASTM A615 or A617, Grade 60 (yield strength = 60,000 psi.).

For additional information, see layout.

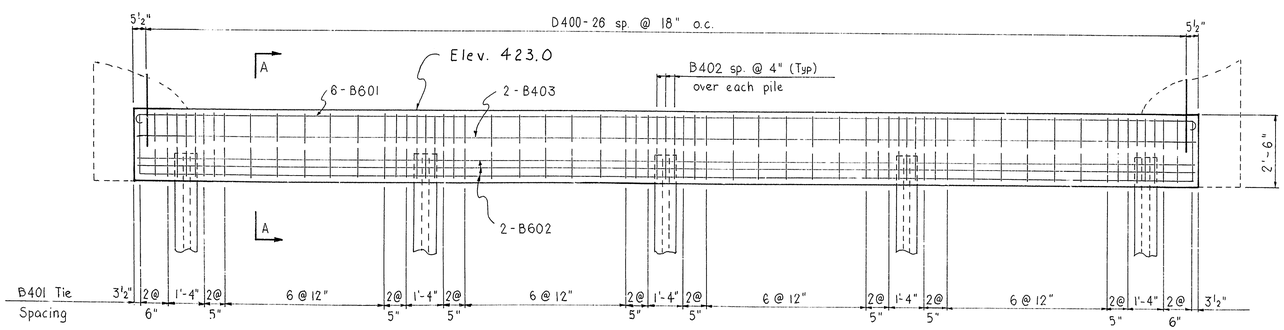

ELEVATION OF END BENT

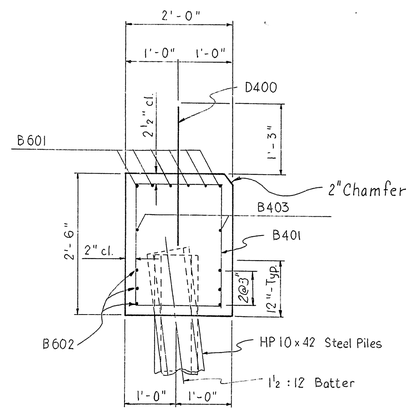

SECTION A-A
Scale ¾" = 1'-0"

DETAILS OF STD. PILE END BENTS

HOLLY CREEK

FOR 35'-0" RCDG SPANS

40'-0" CL RDWY

STATE OF ARKANSAS REGISTERED PROFESSIONAL ENGINEER No. 1779

ROUTE SEC.

ARKANSAS STATE HIGHWAY COMMISSION

LITTLE ROCK, ARK.

DRAWN BY: CLT DATE: 5-24-91
CHECKED BY: DHP DATE: 6-7-91
DESIGNED BY: JWT DATE: 6-20-91

SCALE: ⅜" = 1'-0" or as shown

BRIDGE ENGINEER

BRIDGE NO. 6413 DRAWING NO. 32113

DATE REVISED	DATE FILMED	DATE REVISED	DATE FILMED	FED. ROAD DIST. NO.	STATE	FED. AID PROJ. NO.	SHEET NO.	TOTAL SHEETS
				6	ARK.			
				JOB NO.		3922	20	80

(1) BENTS

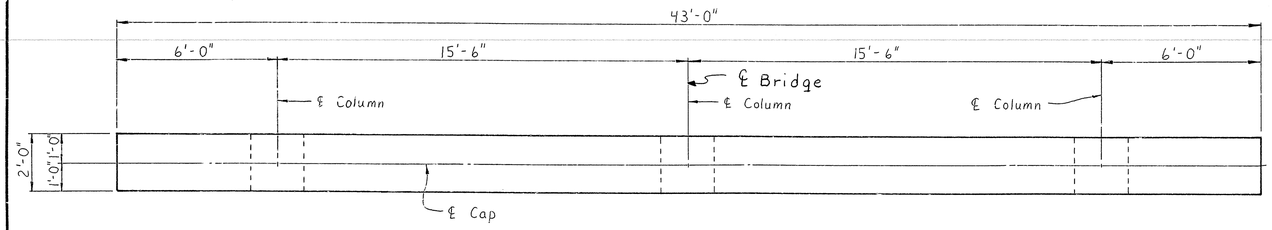

PLAN
Scale 3/8" = 1'-0"

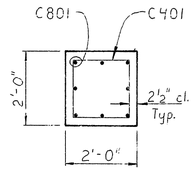

SECTION B-B
Scale ½" = 1'-0"

BAR LIST PER BENT

Mark	No. Req'd	Length	A	B	P.D.
B401	8	22'-2"			Str.
B402	52	8'-11"	1'-8"	2'-7½"	2"
B403	9	6'-9"	1'-8"	2'-7½"	2"
B901	4	45'-2"	42'-8"	10"	9"
B902	3	42'-8"			Str.
D401	**	2'-6"			Str.
C401	63	6'-8"	1'-7"	1'-7"	2"
C801	24	20'-8"			Str.
F601	33	6'-10"	5'-6"	6"	4½"
F602	48	9'-4"	8'-0"	6"	4½"
F801	24	7'-2"	6'-3"	8"	6"

Bending Diagram

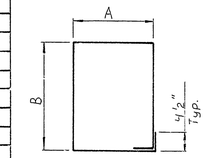

B402, C401

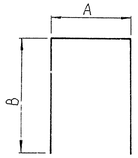

B403

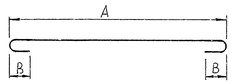

F601, F602, B901

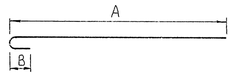

F801

** Bts. 2 & 3 - 29 for Fix-Exp. Jt.
Bt. 4 - 0 for Exp.-Exp. Jt.

Dimension are out to out of bars

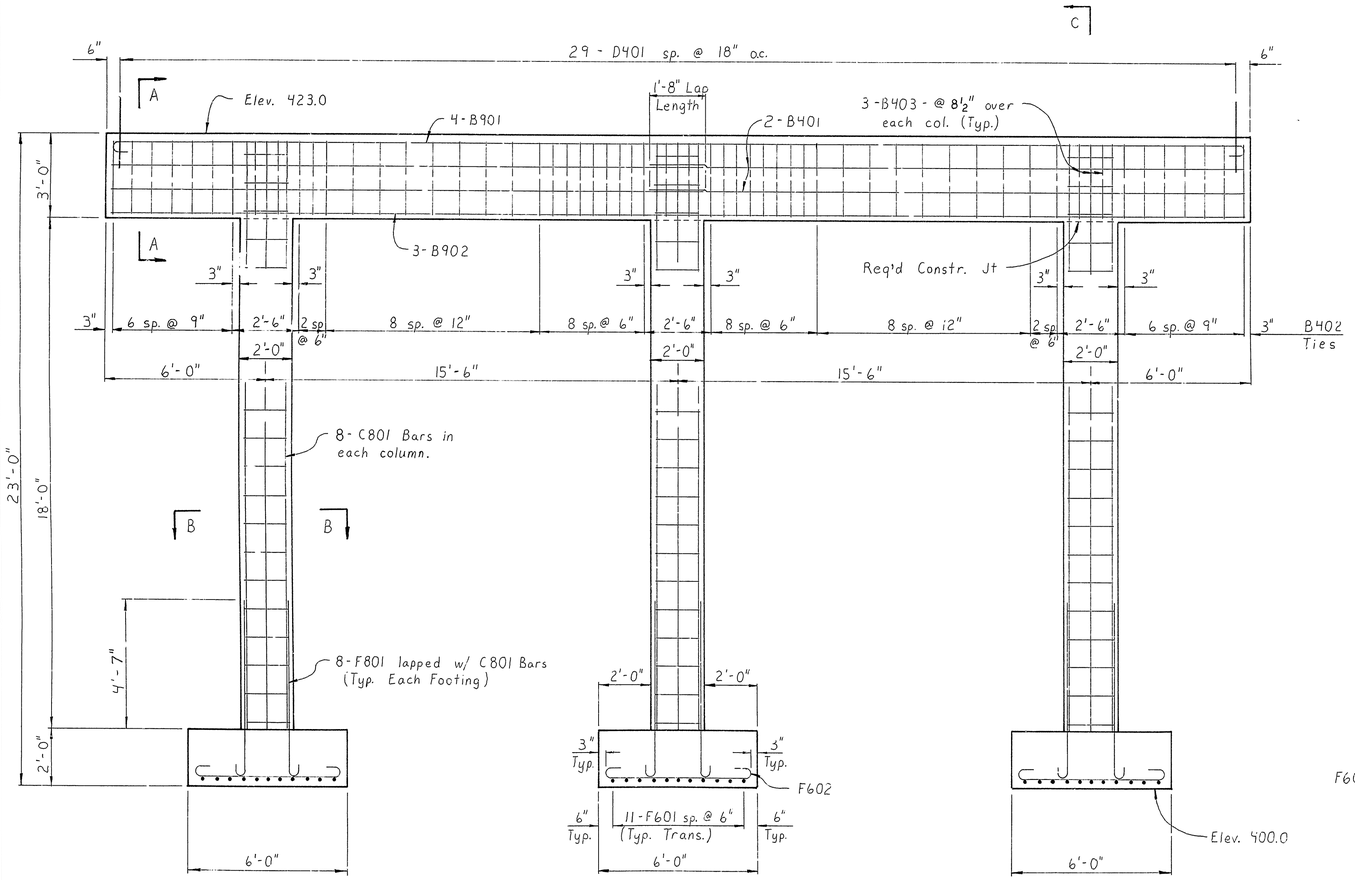

ELEVATION
Scale 3/8" = 1'-0"
Looking Forward

Note: Reinforcing and Dimensions are the same for each footing.

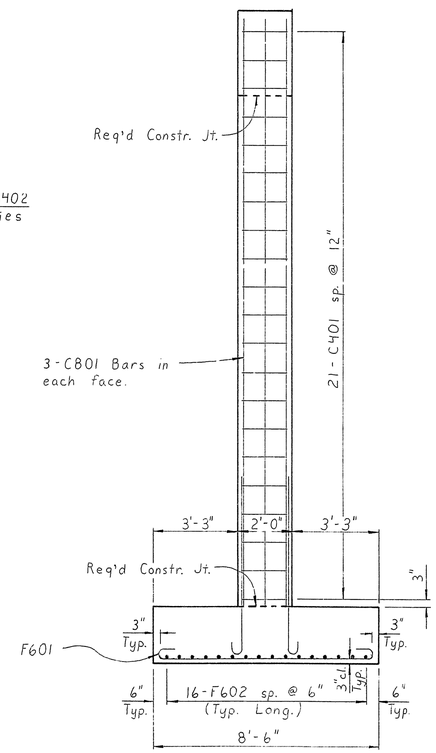

SECTION C-C
Scale 3/8" = 1'-0"

INT. BENT NOTES

All concrete shall be Class "S" with a minimum 28 day compressive strength f'c = 3,500 psi. Concrete shall be poured in the dry and all exposed corners to be chamfered 3/4" unless otherwise noted.

All reinforcing steel shall conform to ASTM A615 or A617, Grade 60 (yield strength = 60,000 psi.).

For additional information see layout.

Footing Pressure 6KSF Group I

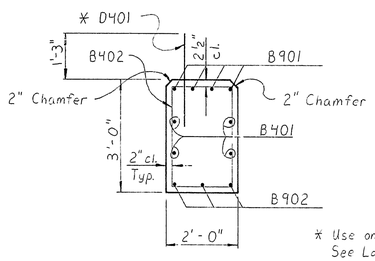

SECTION A-A
Scale ½" = 1'-0"

* Use only for Fix-Exp. Bents. See Layout. For Fix side only.

STATE OF ARKANSAS REGISTERED PROFESSIONAL ENGINEER No. 1779 FINAL INSPECTION

BRIDGE ENGINEER

DETAILS OF BENTS 2,3,&4
HOLLY CREEK

ROUTE SEC.

ARKANSAS STATE HIGHWAY COMMISSION
LITTLE ROCK, ARK.

DRAWN BY: JWT DATE: 5-20-91
CHECKED BY: DHP DATE: 6-7-91
DESIGNED BY: JWT DATE: 6-20-91
SCALE: As Shown

BRIDGE NO. 6413 DRAWING NO. 32114

337287

DATE REVISED	DATE FILMED	DATE REVISED	DATE FILMED	FED. ROAD DIST. NO.	STATE	FED. AID PROJ. NO.	SHEET NO.	TOTAL SHEETS
				6	ARK.			
				JOB NO.		3922	21	80

(1) 6413 STD. R.C.D.G. 32115

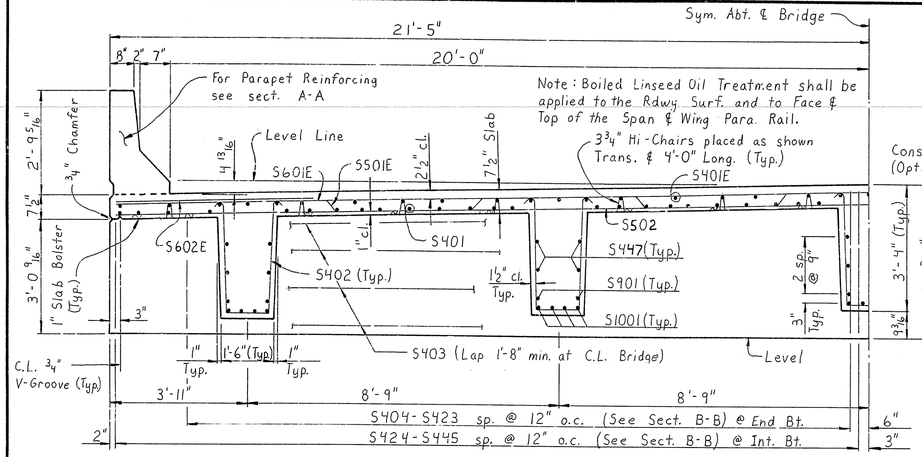

HALF-SECTION THRU RDWY.

Scale ½" = 1'-0"

Note: At the Contractors option, two straight #5 bars may be substituted for S501E. Payment for reinforcing will be based on the weight of bar S501E.

Note: Rail & Wing are included in span construction and included in span quantities, see dwg. 32116.

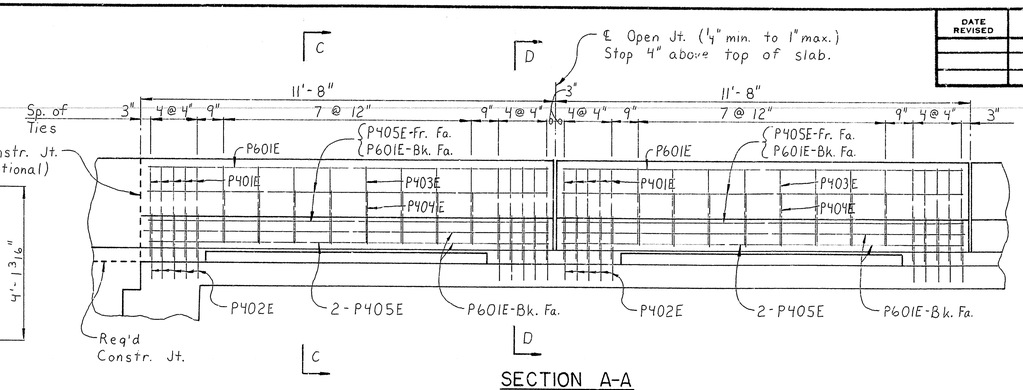

SECTION A-A

Scale ½" = 1'-0"

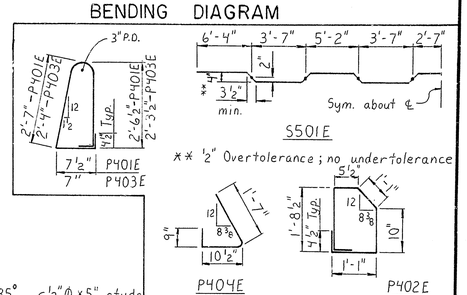

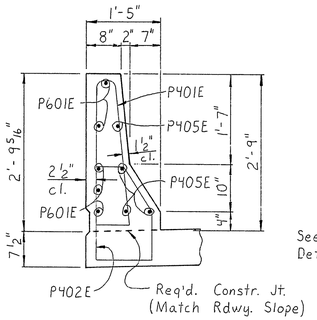

SECTION D-D

Scale ¾" = 1'-0"

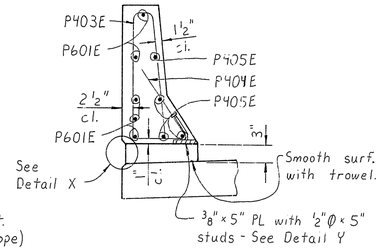

SECTION C-C

Scale ¾" = 1'-0"

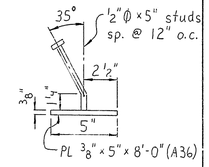

DETAIL Y

N.T.S.

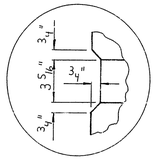

DETAIL X

N.T.S.

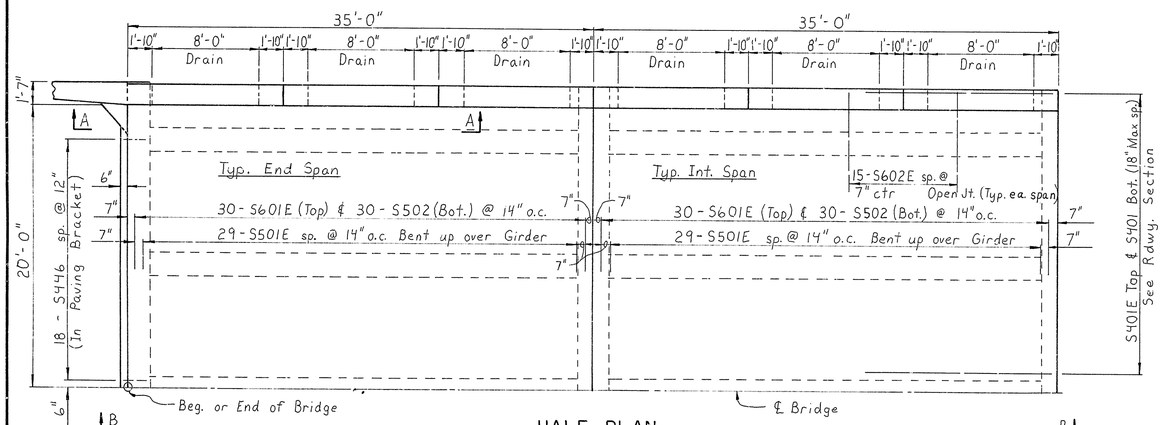

HALF-PLAN

Scale 3/16" = 1'-0"

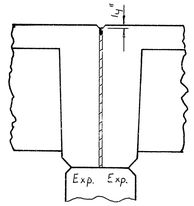

DETAIL OF EXP EXP JT.

Scale ½" = 1'-0"

The surface of the 3/8" plate which will not be in contact with concrete shall receive two coats of paint in the shop. The coats shall be those specified as Shop Prime Coat and Finish Coat in section 638 of the Standard Specifications.

Studs shall be 5" long, granular flux filled, solid fluxed or equal and automatically end welded to the plate. Studs and plates to be measured and paid for as Class S(AE) Concrete. Structural steel shall meet the requirements of Section 807.

All concrete to be Class S(AE). All exposed corners to be chamfered 3/4" unless otherwise noted. The concrete in the girders, end diaphragms, and deck shall be placed in one continuous pour for interior spans. The concrete in the girders, deck, end diaphragms, and wings shall be placed in one continuous pour for end spans.

Reinforcing steel to be ASTM A615 or A617, Grade 60. Bar supports of reinforcing bars will not be paid for directly, but will be considered subsidiary to the item "Reinforcing Steel".

Neoprene Pad, Type 2 Joint Filler and Type 6 Poured Joint Material shall be measured and paid for as Class S(AE) Concrete. Neoprene material shall meet the requirements of Section 808.02 of the Standard Specifications and shall be in one piece for the full width and length of the bearing and may be 50, 60, or 70 durometer elastomer.

Construction Specifications: Arkansas State Highway and Transportation Department Standard Specifications for Highway Construction, 1991 Edition with applicable supplemental specifications and special provisions.

Design Specifications: AASHTO Standard Specifications for Highway Bridges, 1989 Edition with current interim specifications.

Live Loading: HS20 Method of Design: Load Factor

Dead Load: INT. GIRDER 1819 PLF *; EXT. GIRDER 1776 PLF *

*Includes Future Wearing Surface: 200 PLF

Live Load: 1.4583 wheels + impact

Unit Stresses: 28 Day Compressive Strength of Class S(AE) Concrete = 4000 PSI
Yield Strength of Reinforcing Steel = 60,000 PSI.

Dimensions are out to out of bars

BAR LIST-PER SPAN

Mark	No. Req'd. End	No. Req'd. Int.	Length	Pin. Dia.
S401	48	48	34'-7"	Str.
S401E	41	41	34'-7"	Str.
S402	215	215	7'-9"	2"
S403	38	32	22'-1"	Str.
S404-S423	2 ea.		8'-0" 8'-9"	2"
S424-S445	2 ea.	4 ea.	7'-5" 8'-3"	2"
S446	36		4'-5"	2"
S501E	29	29	43'-4"	3"
S502	30	30	42'-6"	Str.
S601E	30	30	42'-6"	Str.
S901	10	10	34'-7"	Str.
S1001	20	20	34'-7"	Str.
S602E	60	60	5'-6"	Str.
P401E	60	60	6'-4"	2"
P402E	60	60	5'-6"	2"
P403E	48	48	5'-10"	2"
P404E	48	48	3'-2"	2"
P405E	24	24	11'-3"	Str.
P601E	30	30	11'-3"	Str.
S447	20	20	34'-7"	Str.

Note: Bars denoted with an "E" suffix shall be Epoxy Coated.

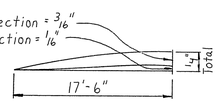

CAMBER DIAGRAM

N.T.S.

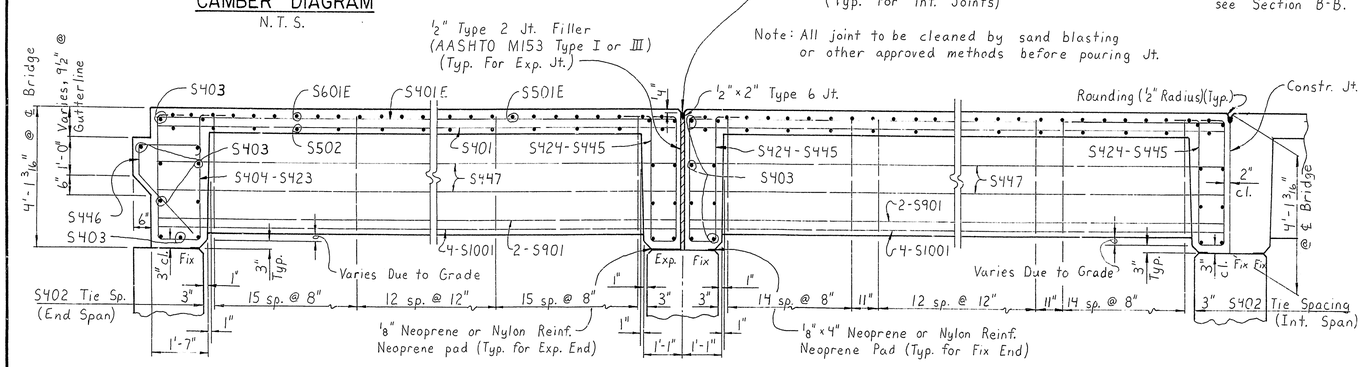

Note: See Layout for Joint Fixity.

SECTION B-B

Scale ½" = 1'-0"

Note: For Dimesions & Reinforcing not shown, see Section B-B.

ARKANSAS REGISTERED PROFESSIONAL ENGINEER

BRIDGE ENGINEER

DETAILS OF STANDARD 35'-0" R.C. DECK GIRDERS 40'-0" CL. ROADWAY

ROUTE SEC.

ARKANSAS STATE HIGHWAY COMMISSION

LITTLE ROCK, ARK.

DRAWN BY: JWT DATE: 5-16-91
CHECKED BY: DHP DATE: 6-7-91
DESIGNED BY: JWT DATE: 6-20-91

SCALE: As Shown

BRIDGE NO. 6413 DRAWING NO. 32115

DATE REVISED	DATE FILMED	DATE REVISED	DATE FILMED	FED. ROAD DIST. NO.	STATE	FED. AID PROJ. NO.	SHEET NO.	TOTAL SHEETS
				6	ARK.			
				JOB NO.		3922	22	80

(1) 6413 & 6414-STD. WING-32116

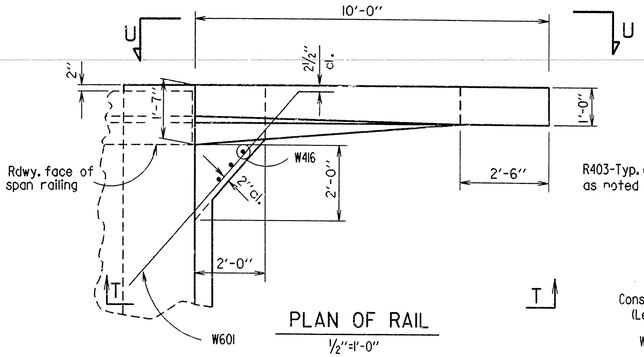

PLAN OF RAIL

½"=1'-0"

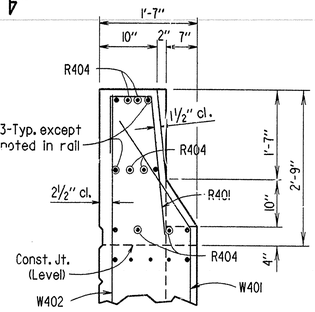

SECTION W-W

¾"=1'-0"

Note: ½" Preformed Asphalt shall be measured and paid for as Class S(AE) Concrete.

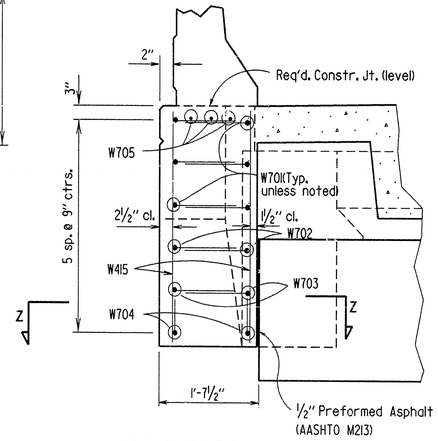

SECTION V-V

¾"=1'-0"

BAR LIST - TWO WING & RAILS

MARK	NO. REQ'D.	LENGTH	A	B	PIN DIA.
R401	8	3'-11"			2"
R402	8	4'-0"			2"
R403	12	9'-8"			Str.
R404	12	4'-0"			Str.
R601	16	4'-5"			Str.
R602	6	5'-0"			Str.
W401	4	5'-6"	4'-4"	1'-2"	2"
W402	4	6'-8"			Str.
W403-W408	2 of each	Var. 3'-4" to 5'-5"	Var. 2'-2" to 4'-3"	1'-2"	2"
W409-W414	2 of each	Var. 4'-6" to 6'-7"			Str.
W415	8	3'-11"			Str.
W416	8	3'-1"			Str.
W417	6	2'-7"			Str.
W418	4	1'-10"			Str.
W601	8	7'-0"	6'-2"	1'-0"	4½"
W701	12	12'-2"	11'-2"	1'-2"	5¼"
W702	4	8'-2"	7'-2"	1'-2"	5¼"
W703	4	6'-4"	5'-4"	1'-2"	5¼"
W704	4	12'-2"			5¼"
W705	6	6'-0"			Str.

BENDING DIAGRAMS

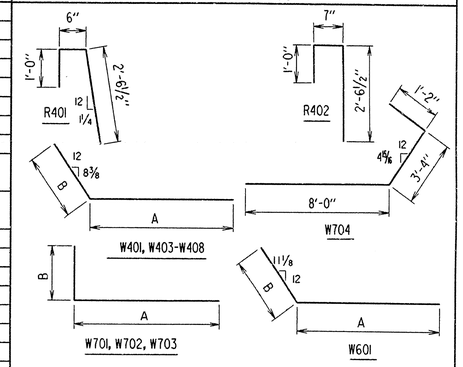

Dimensions are out to out of bars.

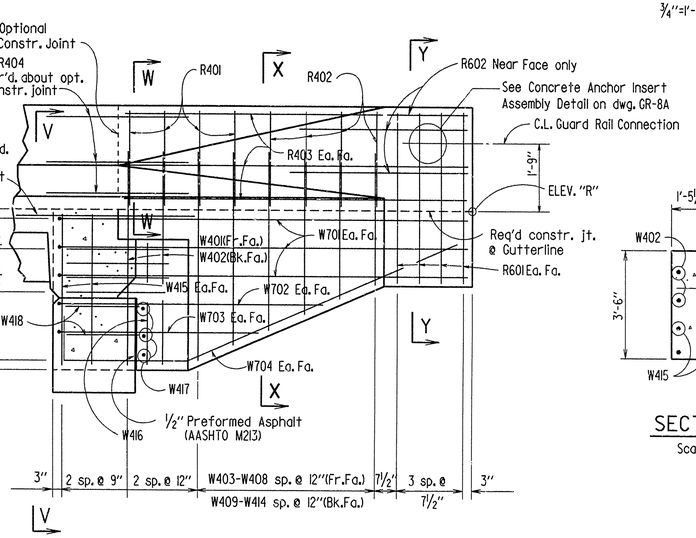

SECTION T-T

½"=1'-0"

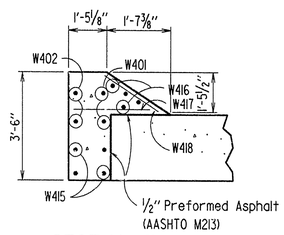

SECTION Z-Z

Scale: ⅜" = 1'-0"

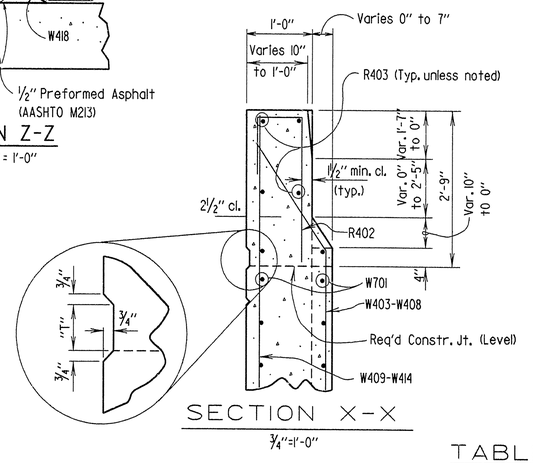

SECTION X-X

¾"=1'-0"

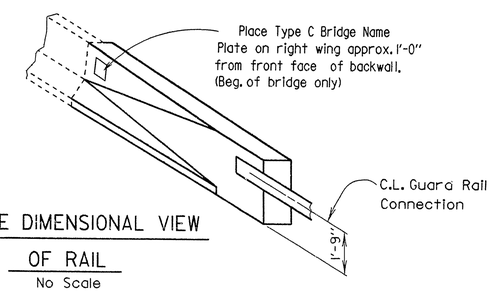

THREE DIMENSIONAL VIEW OF RAIL

No Scale

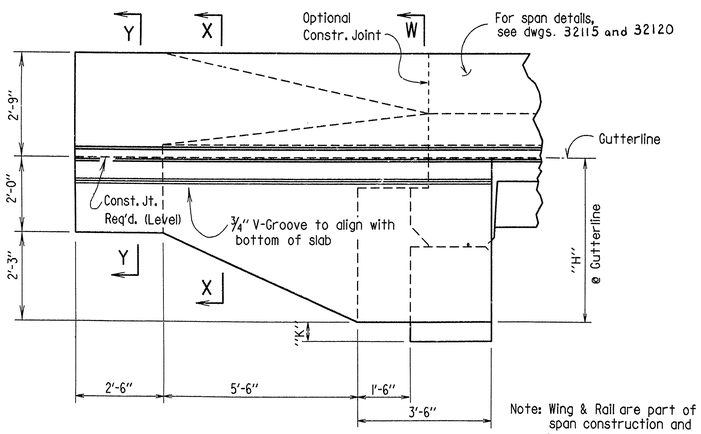

VIEW U-U

½"=1'-0"

Note: Wing & Rail are part of span construction and included in span quantities. For General Notes, see dwgs. 32115 and 32120

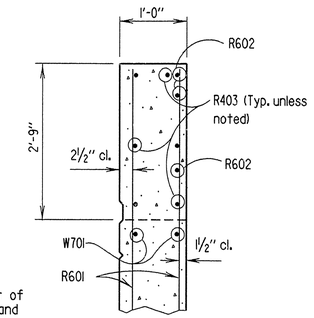

SECTION Y-Y

¾"=1'-0"

TABLE OF VARIABLES

			Elev. "R"	"H"	"K"	"T"	
Br. No. 6413	Bent No. 1	Wing A	426.70	4'-3"	2'-0"	3⅝"	
		Wing B	426.70	4'-3"	2'-0"	3⅝"	
	Bent No. 5	Wing A	426.70	4'-3"	2'-0"	3⅝"	
		Wing B	426.70	4'-3"	2'-0"	3⅝"	
Br. No. 6414	Bent No. 1	Wing A	439.18	4'-3"	2'-0"	3⅝"	
		Wing B	439.18	4'-3"	2'-0"	3⅝"	
	Bent No. 4	Wing A	439.18	4'-3"	2'-0"	3⅝"	
		Wing B	439.18	4'-3"	2'-0"	3⅝"	

Tabular Data By: KDH Date: 11 JUN 91

Checked By: JWT Date: 6-18-91

Note: For details of guard rail connections, see Drwg. No. GR-8 & GR-8A.

Kasal Pinkerton
BRIDGE ENGINEER

STANDARD DETAILS FOR WING AND RAILS HOLLY AND LITTLE HOLLY CREEKS

ROUTE SEC.

ARKANSAS STATE HIGHWAY COMMISSION

LITTLE ROCK, ARK.

ALTERED BY: LM DATE: 11-4-87
CHECKED BY: C.J.F. DATE: 11-25-87
DESIGNED BY: STD. DATE:

SCALE: As Shown

BRIDGE NO. 6313 & 6314 DRAWING NO. 32116

KDHE514 B3922XXXI.WI 1.550 3001, 3992