A.F. 7600

DATE REVISED	DATE FILMED	DATE REVISED	DATE FILMED	FED. ROAD NO.	STATE	FED. AID PROJ. NO.	SHEET NO.	TOTAL SHEETS
				6	ARK.			
				JOB NO.		3922	27	80
				① 6415		-LAYOUT- 32121		

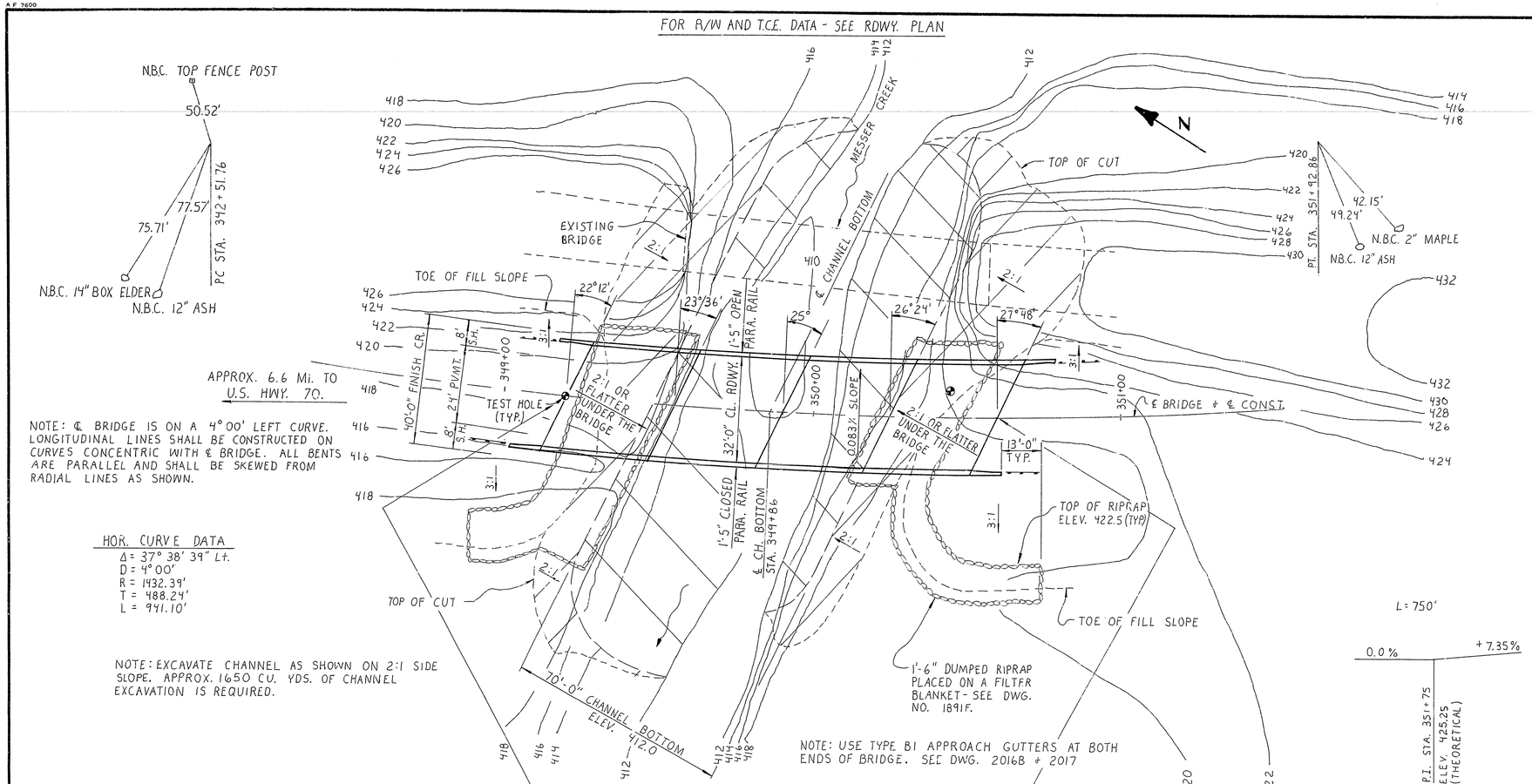

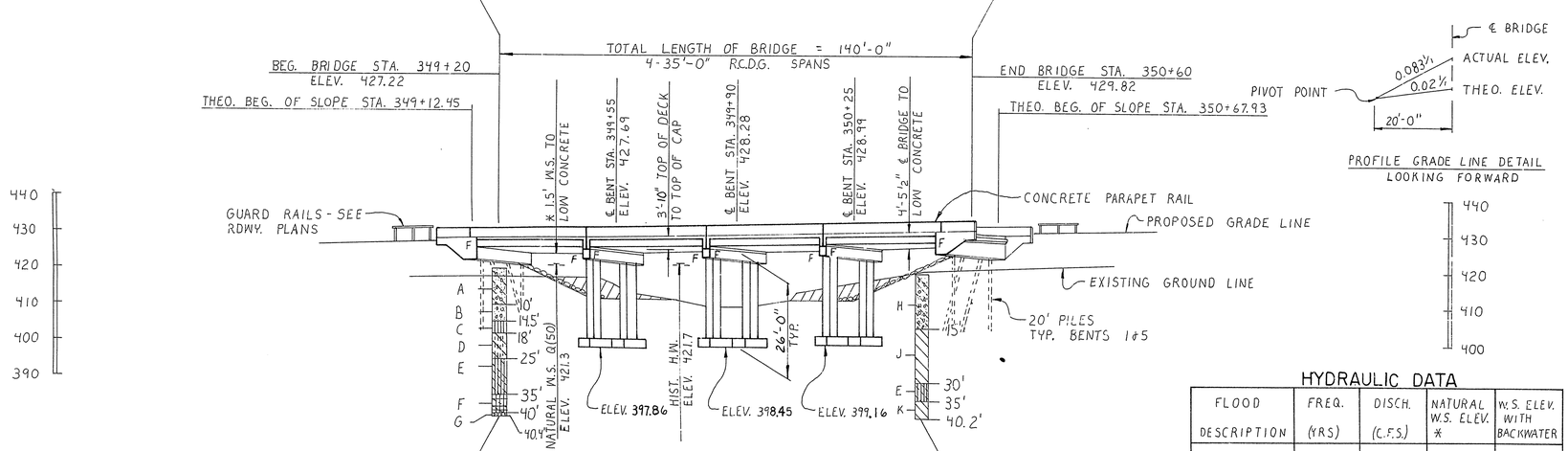

GENERAL NOTES

BENCH MARK: Nail in Side of Power Pole, 44' Left of Center Line Sta. 353+94, Elev. 436.02.

CONSTRUCTION SPECIFICATIONS: Arkansas State Highway and Transportation Department Standard Specifications for Highway Construction, 1991 edition, with applicable supplemental specifications and special provisions.

DESIGN SPECIFICATIONS: AASHTO Standard Specifications for Highway Bridges, 1989 with current interim specifications.

LIVE LOADING: HS20 METHOD OF DESIGN: Load Factor

SEISMIC PERFORMANCE CATEGORY: A

MATERIALS AND STRENGTHS:

Class S(AE) Concrete (superstructure)	f'c = 4,000 psi
Class S Concrete (substructure)	f'c = 3,500 psi
Reinforcing Steel (A615 or A617, GR. 60)	Fy = 60,000 psi
Structural Steel (A36)	Fy = 36,000 psi

BORING LOGS: Boring logs may be obtained from the Programs and Contracts Division.

STEEL PILING: Piling in Bents 1 and 4 shall be HP 10x42 and shall be driven with an approved air, steam, or diesel hammer to a minimum safe bearing capacity of 44 tons per pile and to a minimum penetration of 10' below natural ground. Lengths of piling shown are for estimating quantities and for use in determining payment for cut-off and build-up in accordance with the standard specifications. Piles in end bents to be driven after embankment to bottom of cap is in place.

FOOTINGS: Footings shall be set to a maximum elevation of 400.0 and a minimum of 0.5' into very hard silty clay or very hard calcareous clay. Foundations for footings shall be prepared in accordance with section 801.04 of the Standard Specifications.

BRIDGE DECK: The concrete bridge deck shall be given a tine finish as specified for final finishing in subsection 802.20 for Class 5 Bridge Roadway Surface Finish.

BOILED LINSEED OIL: Boiled linseed oil treatment shall be applied to the roadway surface and to the face and top of the concrete parapet rail.

DETAIL DRAWINGS:

	DRAWING NO.
End Bents	32122 & 32123
Intermediate Bents	32124, 32125, 32126
35'-0" R.C.D.G. SPANS	32127 THRU 32131
Steel Piling	14995A
Type C Bridge Name Plate	2389A
Embankment Construction	1888A
Dumped Riprap and Filter Blanket	1891F
Computing Excavation for Structures	1891F
Approach Slabs and Gutters	2016B & 2017

EXISTING BRIDGE: The existing bridge No. 1870 (log mile 6.63) is 21.17' wide and 94.5' long and consists of a concrete deck, with steel stringers, superstructure supported by concrete substructure. The existing bridge is located approximately 50 feet upstream from the proposed new bridge.

REMOVAL AND SALVAGE: After the new bridge is opened to traffic, the existing bridge (1870) shall be removed in accordance with section 205 of the Standard Specifications. All material from the existing bridge shall become the property of the contractor.

BORING LEGEND

A. Moist, Loose, Brown Clayey Sand, Gravel and Cobbles.
B. Wet, Loose, Brown Sand and Gravel.
C. Moist, Very Dense, Gray Silt.
D. Moist, Very Hard, Brown and Gray Silty Clay.
E. Moist, Very Dense, Brown and Gray Clayey Silt.
F. Alternating Layers of Hard, Gray Limestone and Moist, Very Dense, Gray and Brown Clayey Silt.
G. Moist, Very Dense, Gray Sandy Silt.
H. Moist to Wet, Loose to Very Loose, Brown Clayey Sand and Gravel
J. Moist, Very Hard, Brown and Gray Calcareous Clay.
K. Moist, Very Hard, Brown Calcareous Clay.

HYDRAULIC DATA

FLOOD DESCRIPTION	FREQ. (YRS)	DISCH. (C.F.S.)	NATURAL W.S. ELEV. *	W.S. ELEV. WITH BACKWATER
DESIGN	50	6320	421.3	422.2
BASIC	100	7630	421.8	423.1
EXTREME	500	11500	423.1	426.8
OVERTOPPING	> 500	—	—	—

STATE OF ARKANSAS REGISTERED PROFESSIONAL ENGINEER No. 1779 VERAL PINKERTON

Veral Pinkerton
BRIDGE ENGINEER

LAYOUT OF BRIDGE OVER MESSER CREEK

DIERKS-CENTER POINT BRS. AND APPRS.

HOWARD COUNTY

ROUTE 4 SEC. 3

ARKANSAS STATE HIGHWAY COMMISSION

LITTLE ROCK, ARK.

DRAWN BY: JWT DATE: 3-1-91
CHECKED BY: CJF DATE: 3-6-91
DESIGNED BY: DFC DATE: 3-7-91
SCALE: 1" = 20'

BRIDGE NO. 6415 **DRAWING NO. 32121**

DATE REVISED	DATE FILMED	DATE REVISED	DATE FILMED	FED. ROAD NO.	STATE	FED. AID PROJ. NO.	SHEET NO.	TOTAL SHEETS
				6	ARK.			
				JOB NO.		3922	28	80
				(1) 6415		BENT		32122

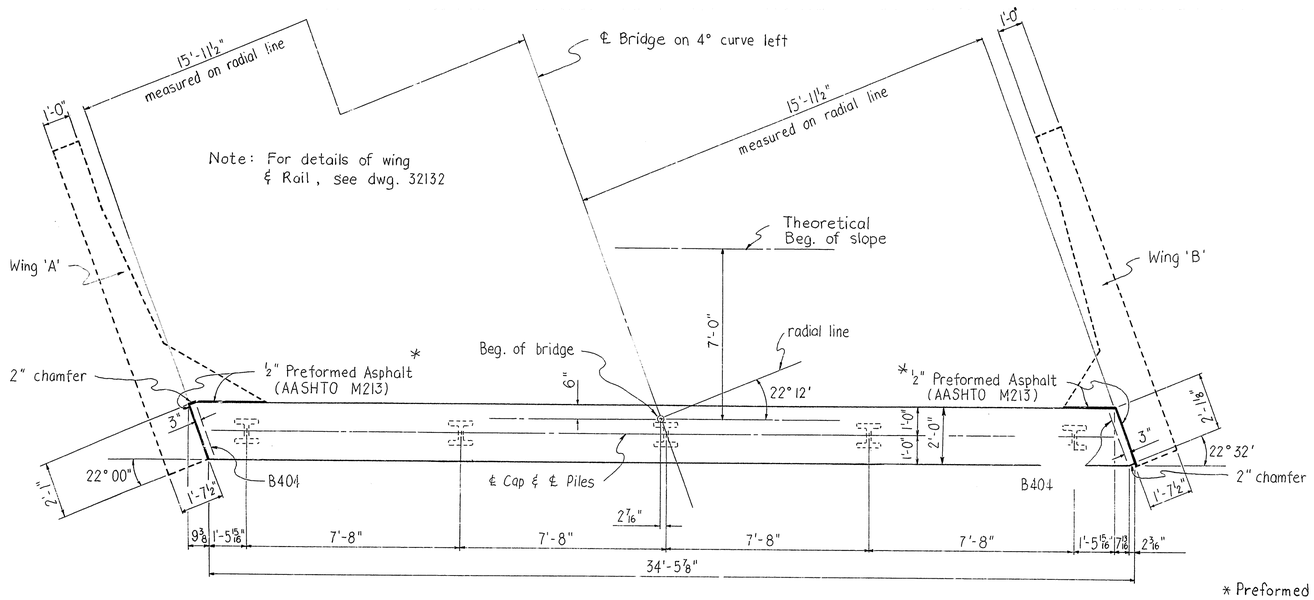

PLAN

* Preformed Asphalt shall be measured and paid for as Class S(AE) Concrete.

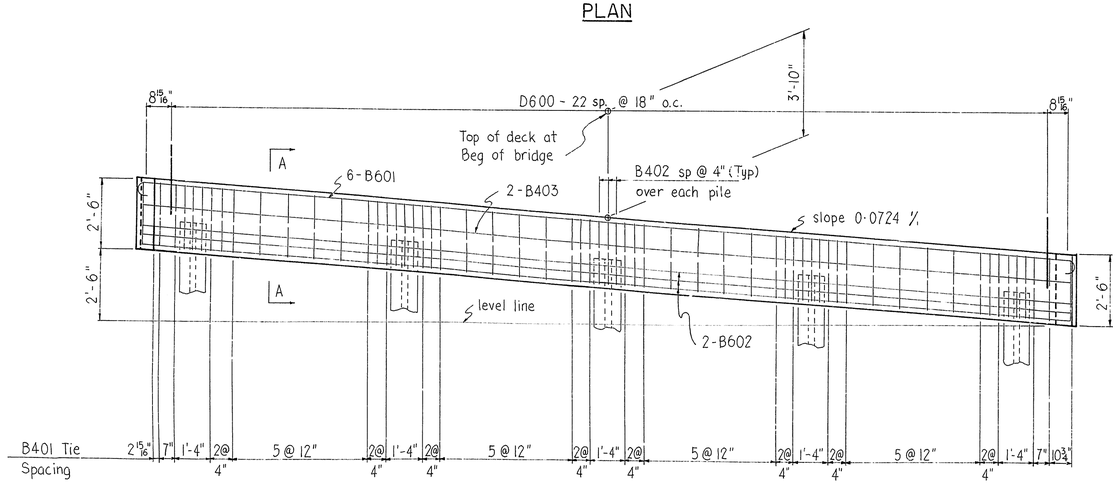

ELEVATION

Looking Back.

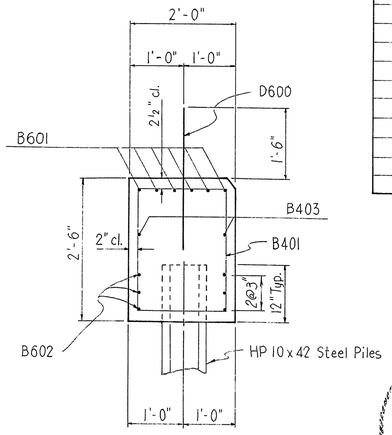

SECTION A-A

Scale ¾" = 1'-0"

END BENT NOTES

All concrete shall be Class ''S'' with a minimum 28 day compressive strength f'c = 3,500 psi. Concrete shall be poured in the dry and all exposed corners to be chamfered 3/4'' unless otherwise noted.

All reinforcing steel shall conform to ASTM A615 or A617, Grade 60 (yield strength = 60,000 psi.).

For additional information, see layout.

BAR LIST

MARK	No. Req. End Bent	Length	Pin Dia.
B401	44	7'-11"	2"
B402	15	5'-9"	2"
B403	2	34'-2"	Str.
B404	2	8'-2"	2"
D600	23	3'-0"	Str.
B601	6	35'-6"	4½"
B602	6	34'-2"	Str.

Bending Diagrams

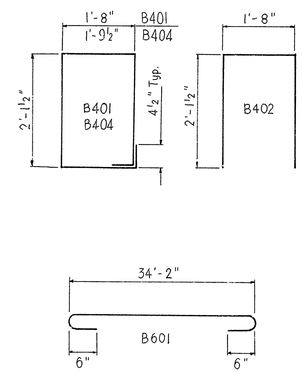

DETAILS OF STD. PILE END BENT 1

MESSER CREEK

FOR 35' 0" RCDG SPANS

32' 0" CL RDWY

STATE OF ARKANSAS REGISTERED PROFESSIONAL ENGINEER No. 1778

BRIDGE ENGINEER

ROUTE SEC.

ARKANSAS STATE HIGHWAY COMMISSION

LITTLE ROCK, ARK.

DRAWN BY: CLT DATE: 5/29/91
CHECKED BY: DHP DATE: 6-20-91
DESIGNED BY: JWT DATE: 6-20-91

SCALE: ⅜" = 1'-0" or as shown

BRIDGE NO. 6415 DRAWING NO. 32122

DATE REVISED	DATE FILMED	DATE REVISED	DATE FILMED	FED. ROAD DIST. NO.	STATE	FED. AID PROJ. NO.	SHEET NO.	TOTAL SHEETS
				6	ARK.			
				JOB NO.		3922	29	80

(1) 6415 BENT 32123

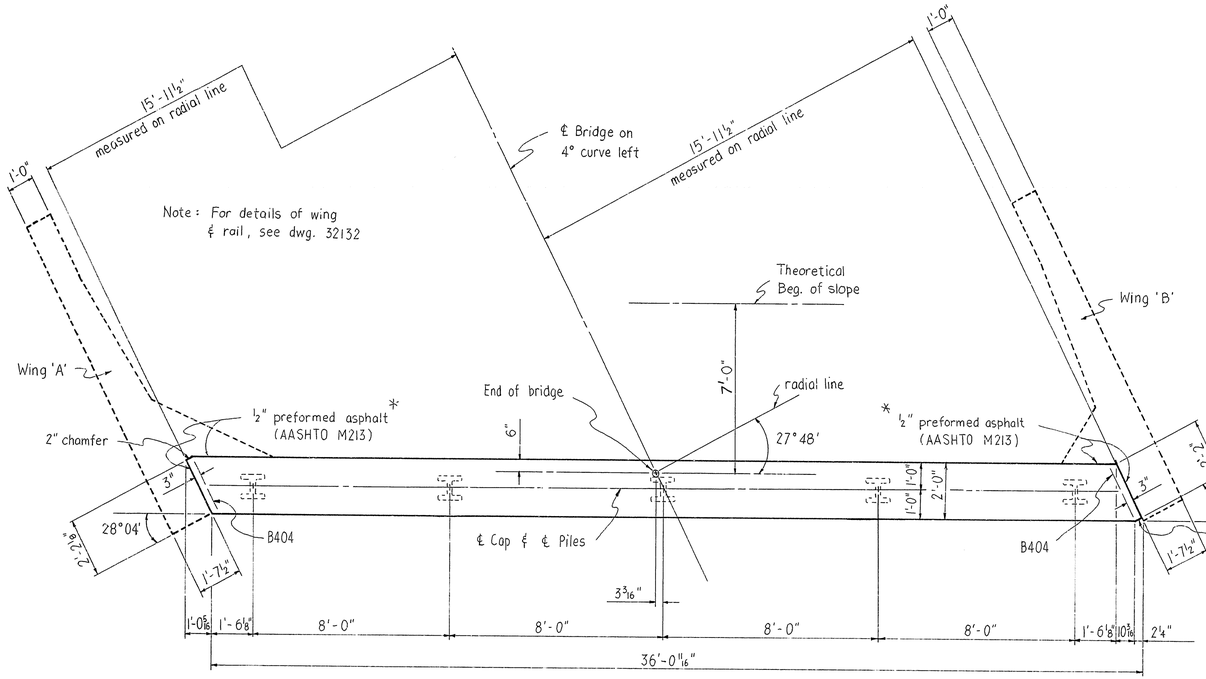

PLAN

* Preformed Asphalt shall be measured and paid for as Class S(AE) Concrete.

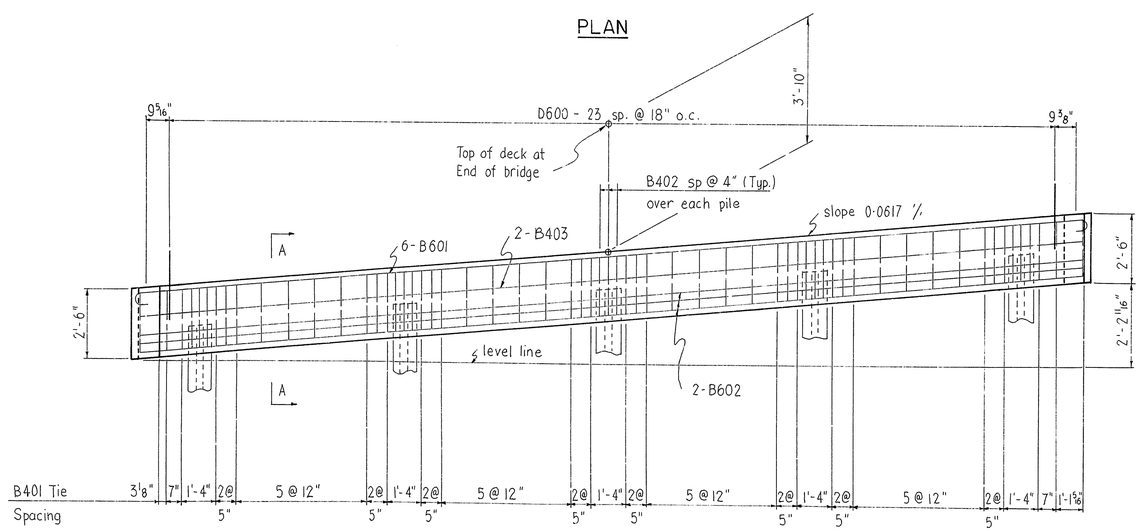

ELEVATION

Looking Forward

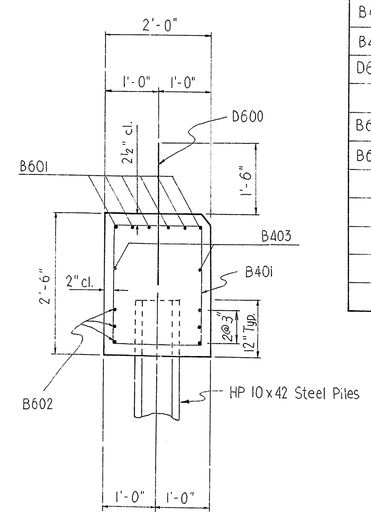

SECTION A-A

Scale ¾" = 1'-0"

END BENT NOTES

All concrete shall be Class ''S'' with a minimum 28 day compressive strength f'c = 3,500 psi. Concrete shall be poured in the dry and all exposed corners to be chamfered 3/4'' unless otherwise noted.

All reinforcing steel shall conform to ASTM A615 or A617, Grade 60 (yield strength = 60,000 psi.).

For additional information, see layout.

BAR LIST

MARK	No Req. End Bent	Length	Pin Dia.	Bending Diagram
B401	44	7'-11"	2"	
B402	15	5'-9"	2"	
B403	2	35'-9'	Str.	
B404	2	8'-3"	2"	
D600	24	3'-0"	Str.	
B601	6	37'-1"	4½"	
B602	6	35'-9"	Str.	

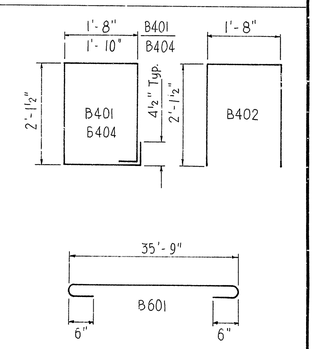

DETAILS OF STD. PILE END BENT 5

MESSER CREEK

FOR 35' 0" RCDG SPANS

32' 0" CL RDWY

STATE OF ARKANSAS REGISTERED PROFESSIONAL ENGINEER No. 1779 LEAL PINKERTON

Leal Pinkerton
BRIDGE ENGINEER

ROUTE SEC.

ARKANSAS STATE HIGHWAY COMMISSION

LITTLE ROCK, ARK.

DRAWN BY: CLT DATE: 5-30-91
CHECKED BY: DHP DATE: 6-20-91
DESIGNED BY: JWT DATE: 6-20-91

SCALE: ⅜" = 1' 0" or as shown

BRIDGE NO. 6415

DRAWING NO. 32123

30787

DATE REVISED	DATE FILMED	DATE REVISED	DATE FILMED	FED. ROAD DIST. NO.	STATE	FED. AID PROJ. NO.	SHEET NO.	TOTAL SHEETS
				6	ARK.			
				JOB NO.		3922	30	80
				(1) 6415		BENTS	32124	

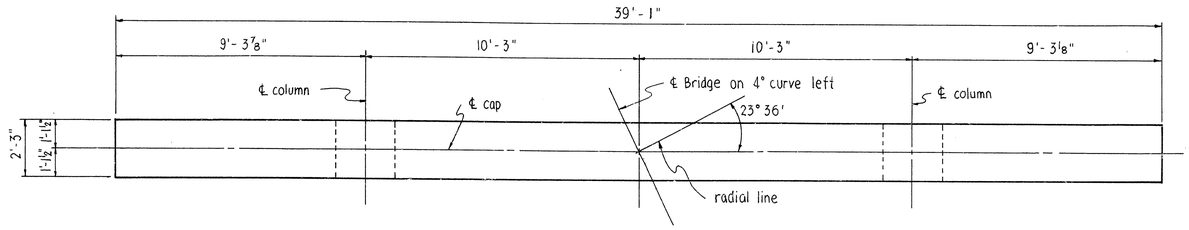

PLAN

Scale ⅜" = 1'-0"

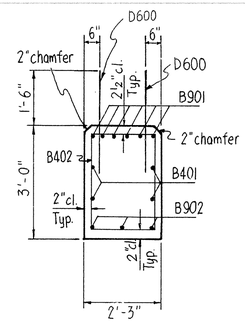

SECTION A-A

Scale ½" = 1'-0"

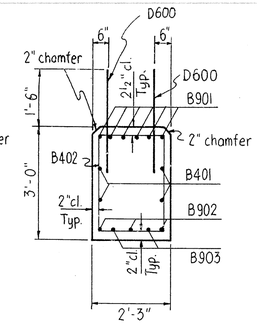

SECTION D-D

Scale ½" = 1'-0"

BAR LIST PER BENT

MARK	No Req.	Length	A	B	Pin Dia.
B401	4	38'-9"			Str.
B402	61	9'-5"	1'-11"	2'-7½"	2"
B403	6	7'-0"	1'-11"	2'-7½"	2"
B901	6	41'-3"	38'-9"	1'0"	9"
B902	3	38'-9"			Str.
B903	2	22'-9"			Str.
D600	52	3'-0"			Str.
C401	47	7'-8"	1'-10"	1'-10"	2"
C801	16	22'-4"			Str.
C802	16	23'-9"			Str.
F601	76	10'-10"	9'-6"	6"	4½"
F801	32	7'-8"	6'-9"	8"	6"

Bending Diagram

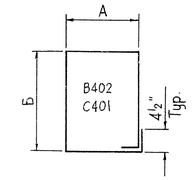

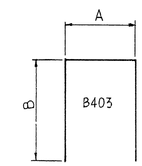

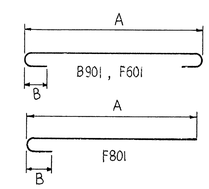

Dimensions are out to out of bars.

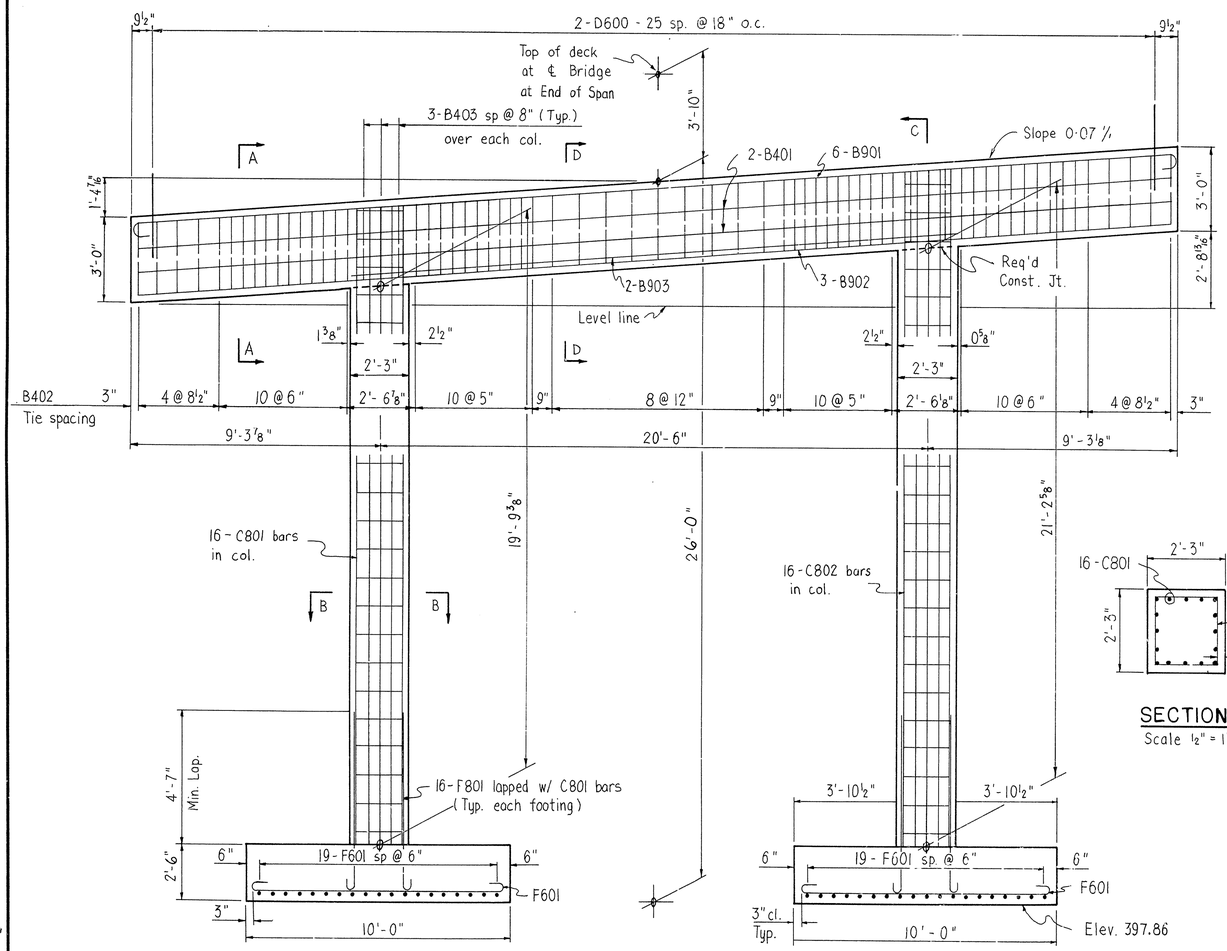

ELEVATION

Looking Forward
Scale ⅜" = 1'-0"

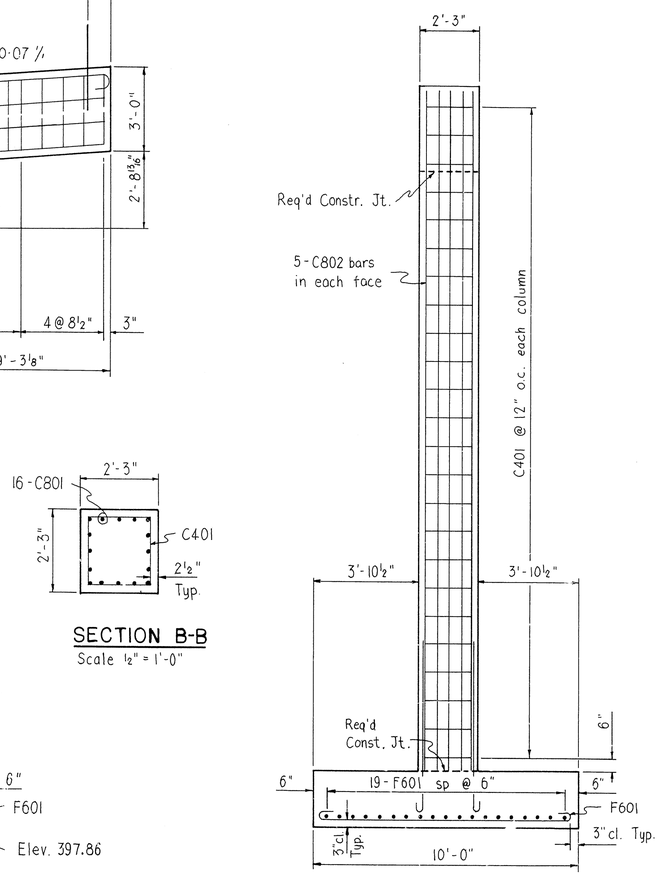

SECTION C-C

Scale ⅜" = 1'-0"

SECTION B-B

Scale ½" = 1'-0"

INT. BENT NOTES

All concrete shall be Class "S" with a minimum 28 day compressive strength f'c = 3,500 psi. Concrete shall be poured in the dry and all exposed corners to be chamfered 3/4" unless otherwise noted.

All reinforcing steel shall conform to ASTM A615 or A617, Grade 60 (yield strength = 60,000 psi.).

For additional information see layout.

Footing Soil Pressure 6.0 KSF Group I

DETAILS OF BENT 2

MESSER CREEK

ROUTE SEC.

ARKANSAS STATE HIGHWAY COMMISSION

LITTLE ROCK, ARK.

DRAWN BY: CLT DATE: 6-2-91
CHECKED BY: DHP DATE: 6-14-91
DESIGNED BY: JWT DATE: 6-20-91
SCALE: As Shown

BRIDGE ENGINEER

BRIDGE NO. 6415 DRAWING NO. 32124

DATE REVISED	DATE FILMED	DATE REVISED	DATE FILMED	FED. ROAD DIST. NO.	STATE	FED. AID PROJ. NO.	SHEET NO.	TOTAL SHEETS
				6	ARK.			
				JOB NO.		3922	34	80
				(1) 6415		BENTS		32125

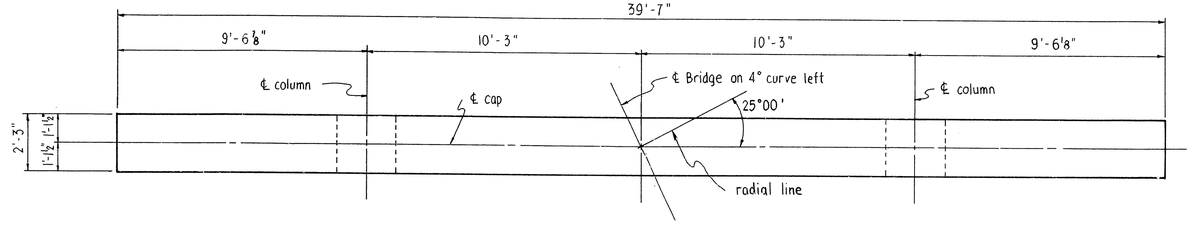

PLAN

Scale ⅜" = 1'-0"

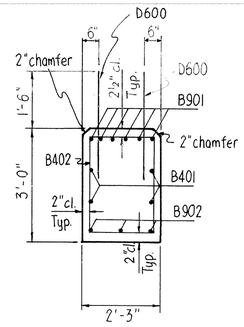

SECTION A-A

Scale ½" = 1'-0"

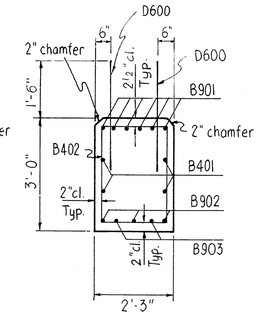

SECTION D-D

Scale ½" = 1'-0"

BAR LIST PER BENT

MARK	No Req.	Length	A	B	Pin Dia.
B401	4	39'-3"			Str.
B402	61	9'-5"	1'-11"	2'-7½"	2"
B403	6	7'-0"	1'-11"	2'-7½"	2"
B901	6	41'-9"	39'-3"	10"	9"
B902	3	39'-3"			Str.
B903	2	22'-9"			Str.
D600	52	3'-0"			Str.
C401	47	7'-8"	1'-10"	1'-10"	2"
C801	16	22'-4"			Str.
C802	16	23'-9"			Str.
F601	76	10'-10"	9'-6"	6"	4½"
F801	32	7'-8"	6'-9"	8"	6"

Bending Diagram

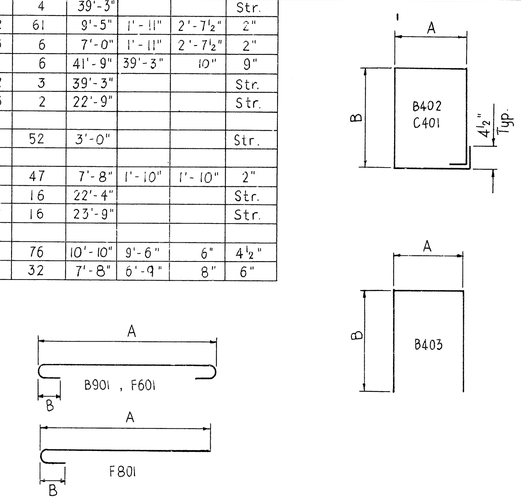

Dimensions are out to out of bars.

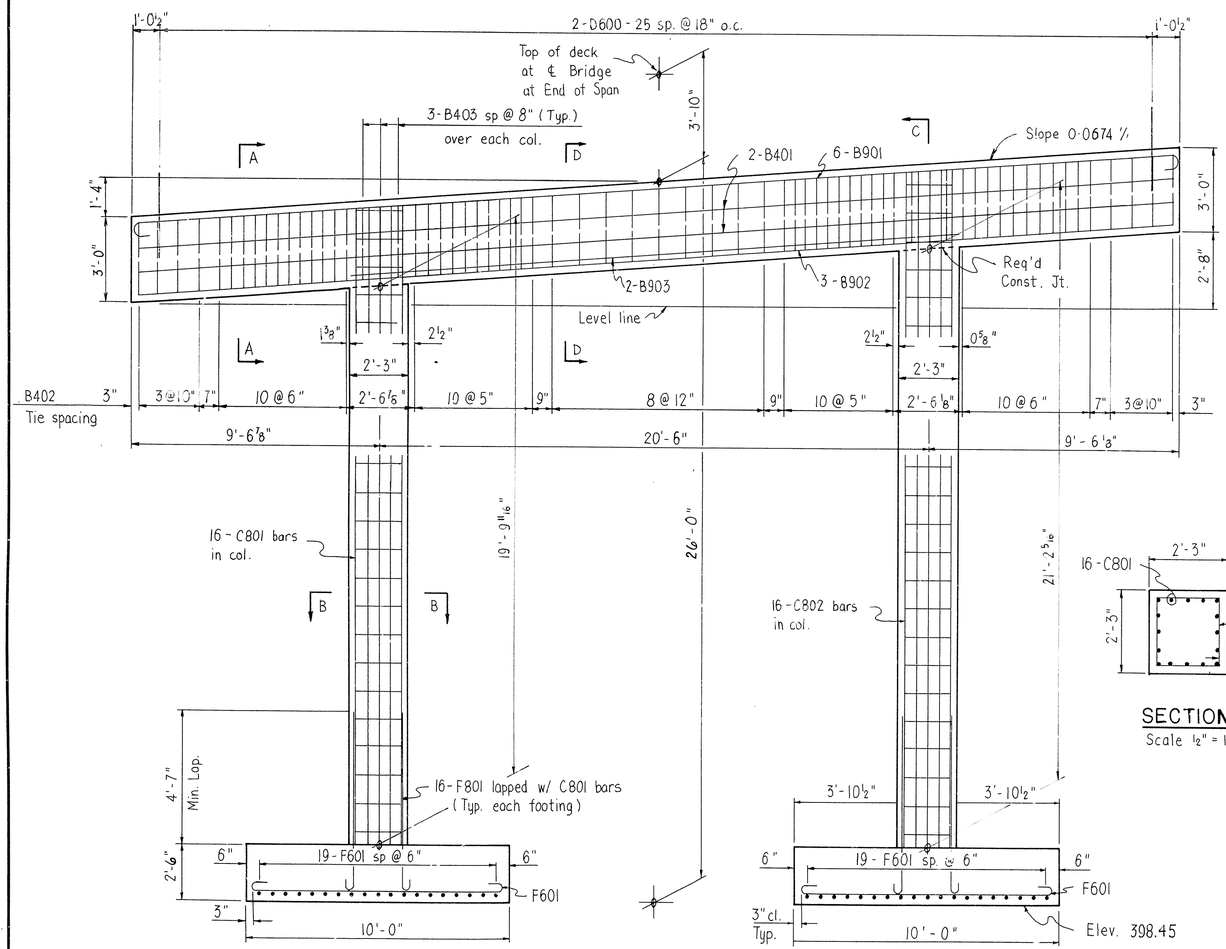

ELEVATION

Looking Forward
Scale ⅜" = 1'-0"

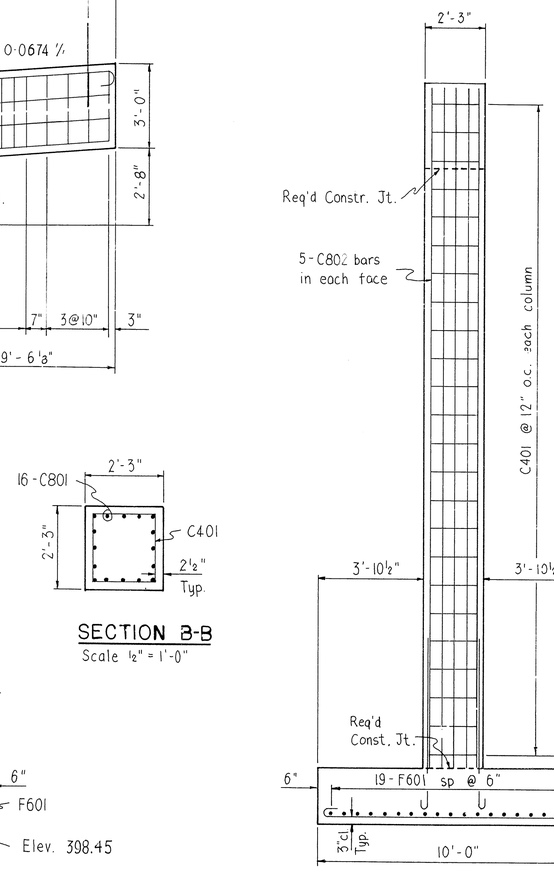

SECTION C-C

Scale ⅜" = 1'-0"

SECTION B-B

Scale ½" = 1'-0"

INT. BENT NOTES

All concrete shall be Class ''S'' with a minimum 28 day compressive strength f'c = 3,500 psi. Concrete shall be poured in the dry and all exposed corners to be chamfered 3/4'' unless otherwise noted.

All reinforcing steel shall conform to ASTM A615 or A617, Grade 60 (yield strength = 60,000 psi.).

For additional information see layout.

Footing Soil Pressure 6.0 KSF Group I

STATE OF ARKANSAS REGISTERED PROFESSIONAL ENGINEER No. 1770 STRAL INSPECTION

BRIDGE ENGINEER

DETAILS OF BENT 3

MESSER CREEK

ROUTE SEC.

ARKANSAS STATE HIGHWAY COMMISSION

LITTLE ROCK, ARK.

DRAWN BY: CLT DATE: 6-2-91
CHECKED BY: DHP DATE: 6-14-91
DESIGNED BY: JWT DATE: 6-20-91
SCALE: As Shown

BRIDGE NO. 6415 DRAWING NO. 32125

8-30-91

397287

DATE REVISED	DATE FILMED	DATE REVISED	DATE FILMED	FED. ROAD DIST. NO.	STATE	FED. AID PROJ. NO.	SHEET NO.	TOTAL SHEETS
				6	ARK.			
				JOB NO.		3922	32	80
				(1) 6415		BENTS		32125

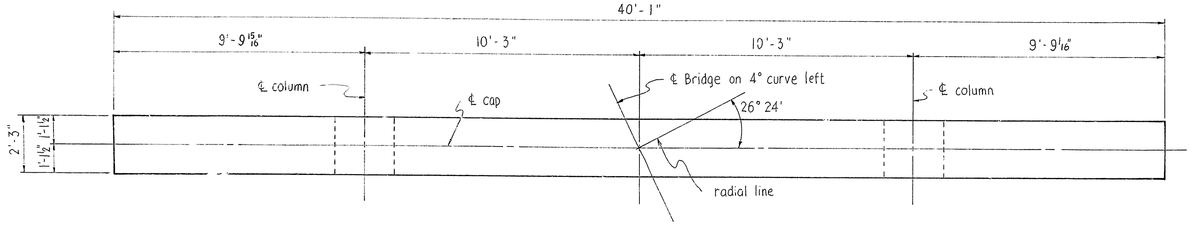

PLAN

Scale 3/8" = 1'-0"

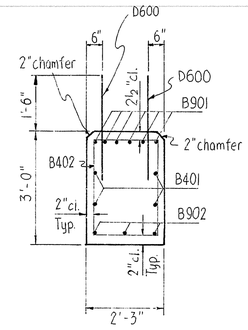

SECTION A-A

Scale 1/2" = 1'-0"

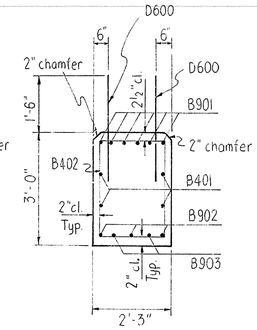

SECTION D-D

Scale 1/2" = 1'-0"

BAR LIST PER BENT

MARK	No Req.	Length	A	B	Pin Dia.
B401	4	39'-9"			Str.
B402	61	9'-5"	1'-11"	2'-7½"	2"
B403	5	7'-0"	1'-11"	2'-7½"	2"
B901	6	42'-3"	39'-9"	10"	9"
B902	3	39'-9"			Str.
B903	2	22'-9"			Str.
D600	52	3'-0"			Str.
C401	47	7'-8"	1'-10"	1'-10"	2"
C801	16	22'-5"			Str.
C802	16	23'-9"			Str.
F601	76	10'-10"	9'-6"	6"	4½"
F801	32	7'-8"	6'-9"	8"	6"

Bending Diagram

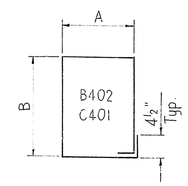

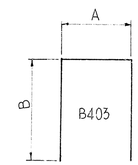

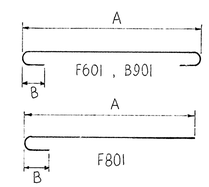

Dimensions are out to out of bars.

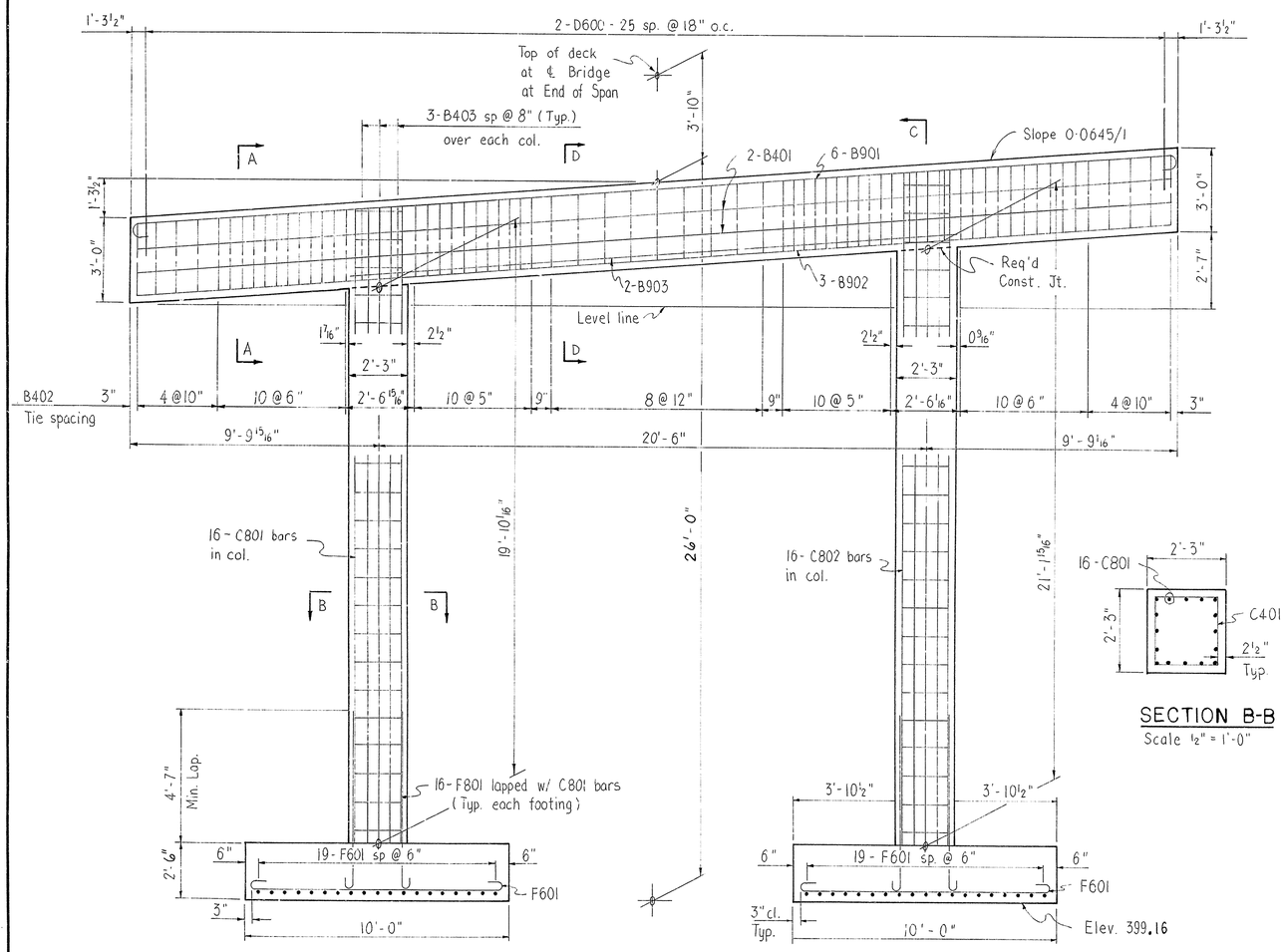

ELEVATION

Looking Forward
Scale 3/8" = 1'-0"

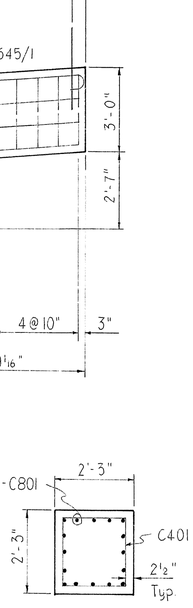

SECTION B-B

Scale 1/2" = 1'-0"

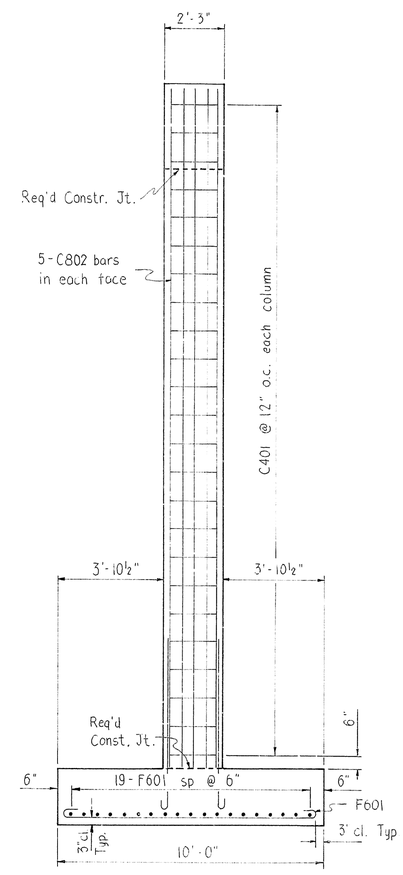

SECTION C-C

Scale 3/8" = 1'-0"

INT. BENT NOTES

All concrete shall be Class ''S'' with a minimum 28 day compressive strength f'c = 3,500 psi. Concrete shall be poured in the dry and all exposed corners to be chamfered 3/4'' unless otherwise noted.

All reinforcing steel shall conform to ASTM A615 or A617, Grade 60 (yield strength = 60,000 psi.).

For additional information see layout.

Footing Soil Pressure 6.0 KSF Group I

STATE OF ARKANSAS REGISTERED PROFESSIONAL ENGINEER No. 1779 VERAL PINKERTON

BRIDGE ENGINEER

DETAILS OF BENT 4

MESSER CREEK

ROUTE SEC.

ARKANSAS STATE HIGHWAY COMMISSION

LITTLE ROCK, ARK.

DRAWN BY: CLT DATE: 6-2-91
CHECKED BY: DHP DATE: 6-14-91
DESIGNED BY: JWT DATE: 6-20-91
SCALE: As Shown

BRIDGE NO. 6415 DRAWING NO. 32126

DATE REVISED	DATE FILMED	DATE REVISED	DATE FILMED	FED. ROAD DIST. NO.	STATE	FED. AID PROJ. NO.	SHEET NO.	TOTAL SHEETS
				6	ARK.			
				JOB NO.		3922	33	80

(1) 6415 - R.C.D.G. SPANS - 32127

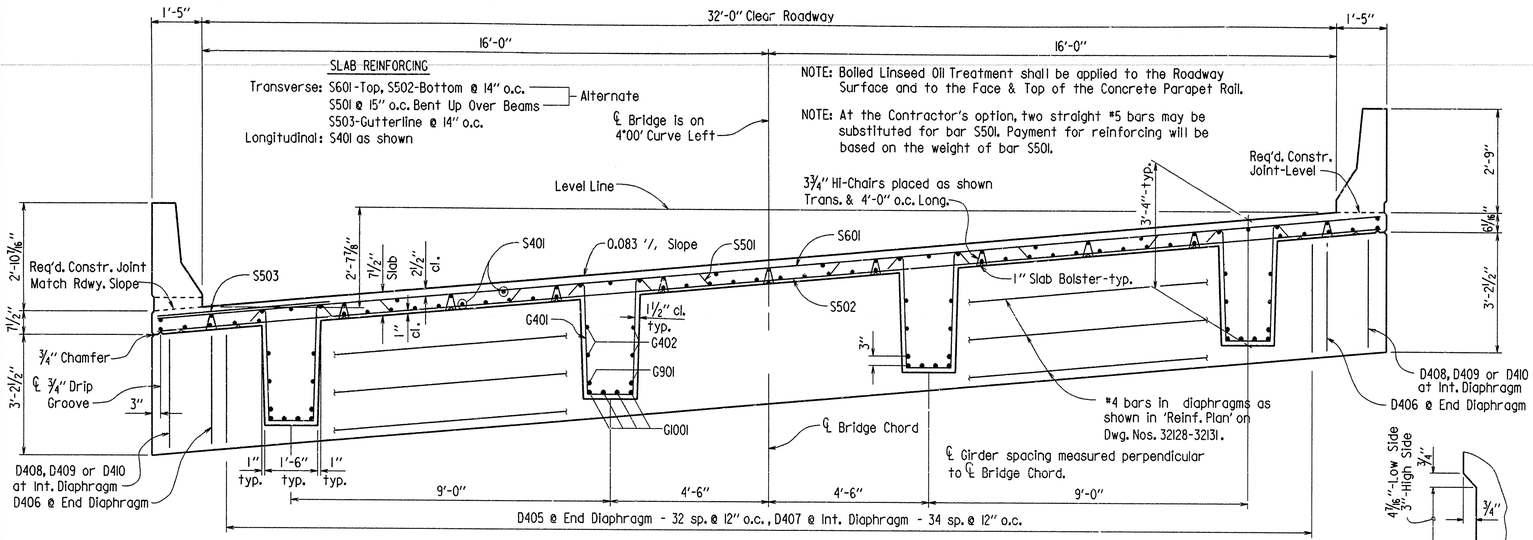

TYPICAL ROADWAY SECTION

Looking Ahead
Scale : ½" = 1'-0"

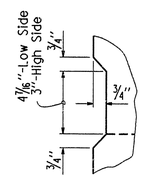

DETAIL Y

N.T.S.

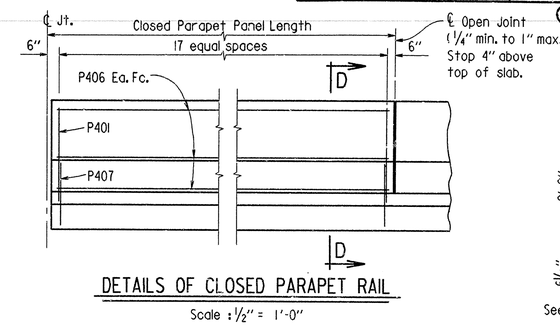

DETAILS OF CLOSED PARAPET RAIL

Scale : ½" = 1'-0"

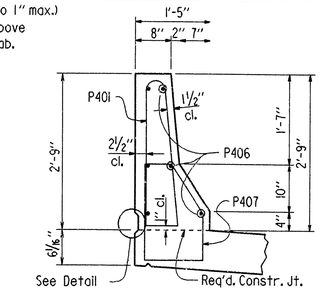

SECTION D-D

¾" = 1'-0"

GENERAL NOTES

All concrete to be Class S(AE). All exposed corners to be chamfered 3/4" unless otherwise noted. The concrete in the girders, end diaphragms, and deck shall be placed in one continuous pour for interior spans. The concrete in the girders, deck, end diaphragms, and wings shall be placed in one continuous pour for end spans.

Reinforcing steel to be ASTM A615 or A617, Grade 60. Bar supports of reinforcing bars will not be paid for directly, but will be considered subsidiary to the item ''Reinforcing Steel''.

Neoprene Pad, Type 2 Joint Filler and Type 6 Poured Joint Material shall be measured and paid for as Class S(AE) Concrete. Neoprene material shall meet the requirements of Section 808.02 of the Standard Specifications and shall be in one piece for the full width and length of the bearing and may be 50, 60, or 70 durometer elastomer.

Construction Specifications: Arkansas State Highway and Transportation Department Standard Specifications for Highway Construction, 1991 Edition with applicable supplemental specifications and special provisions.

Design Specifications: AASHTO Standard Specifications for Highway Bridges, 1989 Edition with current interim specifications.

Live Loading: HS20 Method of Design: Load Factor

	Int. Girder	Ext. Girder
Dead Load:	*1882 PLF	*1827 plf

*Includes Future Wearing Surface: 200 PLF

Live Load: 1.500 wheels + impact

Unit Stresses: 28 day compressive strength of Class S(AE) Concrete = 4000 psi.
Yield Strength of Reinforcing Steel = 60,000 psi.

BENDING DIAGRAMS FOR PARAPET RAIL

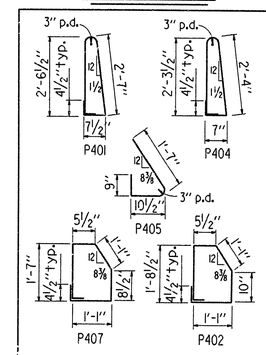

(Dimensions are out to out of bars.)

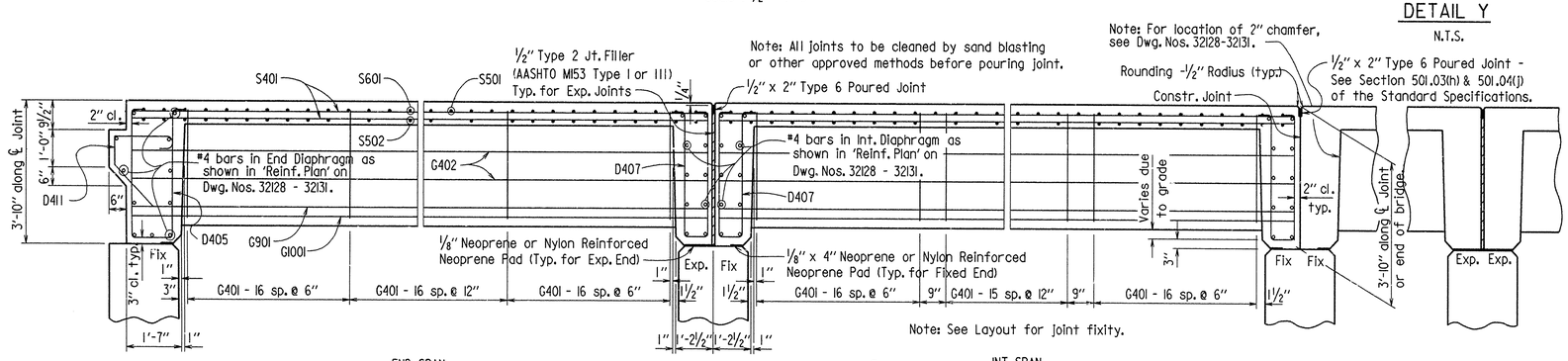

SECTION THRU ℄ BRIDGE

Scale : ½" = 1'-0"

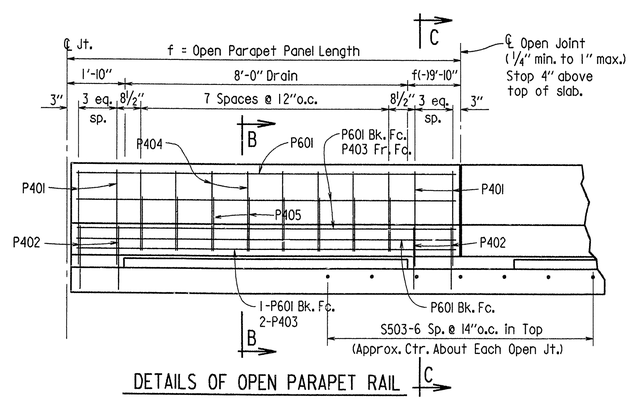

DETAILS OF OPEN PARAPET RAIL

Scale : ½" = 1'-0"

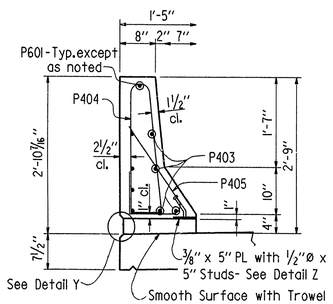

SECTION B-B

¾" = 1'-0"

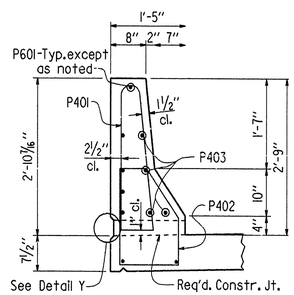

SECTION C-C

¾" = 1'-0"

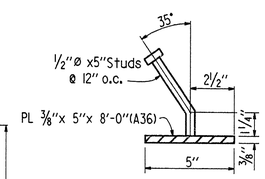

DETAIL Z

N.T.S.

Note:
The surfaces of the ⅜" Plates which will not be in contact with concrete shall receive two coats of paint in the shop. These coats shall be those specified as Shop Prime Coat and Finish Coat in Section 638 of the Standard Specifications. Studs shall be 5" long, granular flux filled, solid fluxed or equal and automatically end welded to the plate. Studs to be measured and paid for as Class S(AE) Concrete. Structural Steel shall meet the requirements of Section 807.

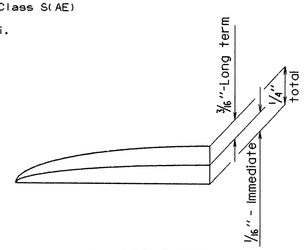

CAMBER DIAGRAM

No Scale

STATE OF ARKANSAS
REGISTERED PROFESSIONAL ENGINEER
No. 1779
VERAL PINKERTON

Veral Pinkerton
BRIDGE ENGINEER

DETAILS COMMON TO 35'-0" R.C.D.G. SPANS MESSER CREEK

ROUTE SEC.

ARKANSAS STATE HIGHWAY COMMISSION

LITTLE ROCK, ARK.

DRAWN BY: KDH DATE: 23 MAY 91
CHECKED BY: DHP DATE: 6-20-91
DESIGNED BY: JWT DATE: 6-20-91
SCALE: AS NOTED

BRIDGE NO. 6415 DRAWING NO. 32127

KDHE514 1, 550, 3001, 3922 B3922.S01

DATE REVISED	DATE FILMED	DATE REVISED	DATE FILMED	FED. ROAD DIST. NO.	STATE	FED. AID PROJ. NO.	SHEET NO.	TOTAL SHEETS
				6	ARK.			
				JOB NO.		3922	34	80

(1) 6415 - SPAN 1 - 32128

Note: Rail & wing are included in span construction and quantities. For details of rail & wing, see Dwg. No. 32132.

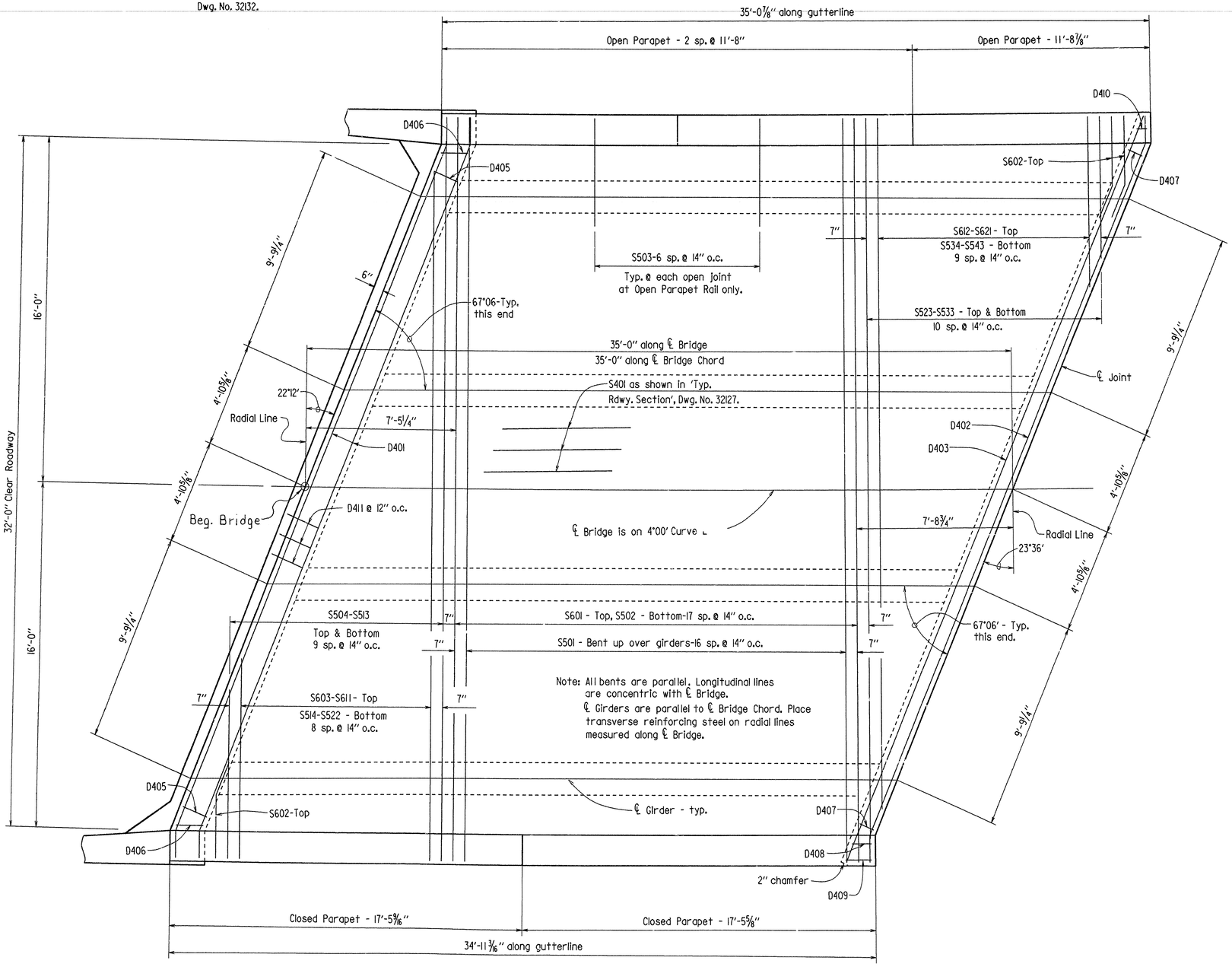

REINFORCING PLAN

Scale : ⅜" = 1'-0"

BAR LIST

MARK	NO. REQ'D.	LENGTH	P.D.
S401	71	34'-8"	Str.
D401	11	37'-0"	2"
D402	5	37'-5"	2"
D403	5	37'-7"	Str.
D405	33	8'-3"	2"
D406	2	8'-4"	2"
D407	35	7'-10"	2"
D408	1	8'-0"	2"
D409	1	8'-5"	2"
D410	1	7'-6"	2"
D411	32	4'-5"	2"
G401	196	7'-10"	2"
G402	16	34'-6"	Str.
P401	60	6'-4"	2"*
P402	24	5'-6"	2"*
P403	12	11'-2"	Str.
P404	24	5'-10"	2"*
P405	24	3'-2"	2"*
P406	12	16'-11"	Str.
P407	36	5'-3"	2"*
S501	17	35'-2"	3"
S502	18	34'-6"	Str.
S503	14	5'-0"	Str.
S504-S513	2 ea.	Var. 7'-9" to 33'-4"	Str.
S514-S522	1 ea.	Var. 9'-2" to 31'-11"	Str.
S523-S533	2 ea.	Var. 6'-7" to 33'-4"	Str.
S534-S543	1 ea.	Var. 7'-10" to 32'-0"	Str.
S601	18	34'-6"	Str.
S602	3	5'-1"	4½"
S603-S611	1 ea.	Var. 9'-2" to 31'-11"	Str.
S612-S621	1 ea.	Var. 7'-10" to 32'-0"	Str.
P601	15	11'-2"	Str.
G901	8	34'-6"	Str.
G1001	16	34'-6"	Str.

BENDING DIAGRAMS

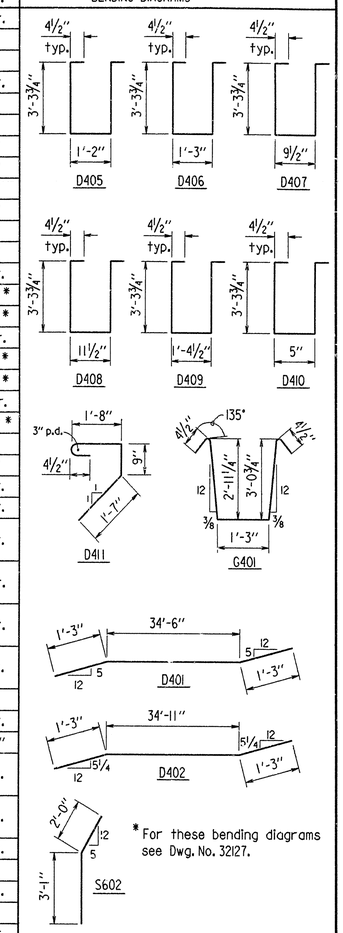

* For these bending diagrams see Dwg. No. 32127.

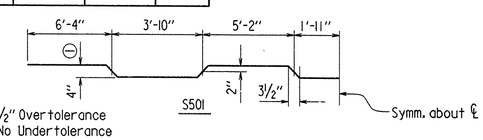

(1) ½" Overtolerance
No Undertolerance

Dimensions are out to out of bars.

STATE OF ARKANSAS REGISTERED PROFESSIONAL ENGINEER No. 1770 VERNEL PINKERTON

Vernel Pinkerton
BRIDGE ENGINEER

DETAILS OF SPAN 1
MESSER CREEK

ROUTE SEC.

ARKANSAS STATE HIGHWAY COMMISSION

LITTLE ROCK, ARK.

DRAWN BY: KDH DATE: 30 MAY 91
CHECKED BY: DHP DATE: 6-20-91
DESIGNED BY: JWT DATE: 6-20-91
SCALE: AS NOTED

BRIDGE NO. 6415 DRAWING NO. 32128

KDHE514 1, 550, 3001, 3922 B3922.S1

DATE REVISED	DATE FILMED	DATE REVISED	DATE FILMED	FED. ROAD DIST. NO.	STATE	FED. AID PROJ. NO.	SHEET NO.	TOTAL SHEETS
				6	ARK.			
				JOB NO.		3922	35	80
				①	6415 - SPAN 2 - 32129			

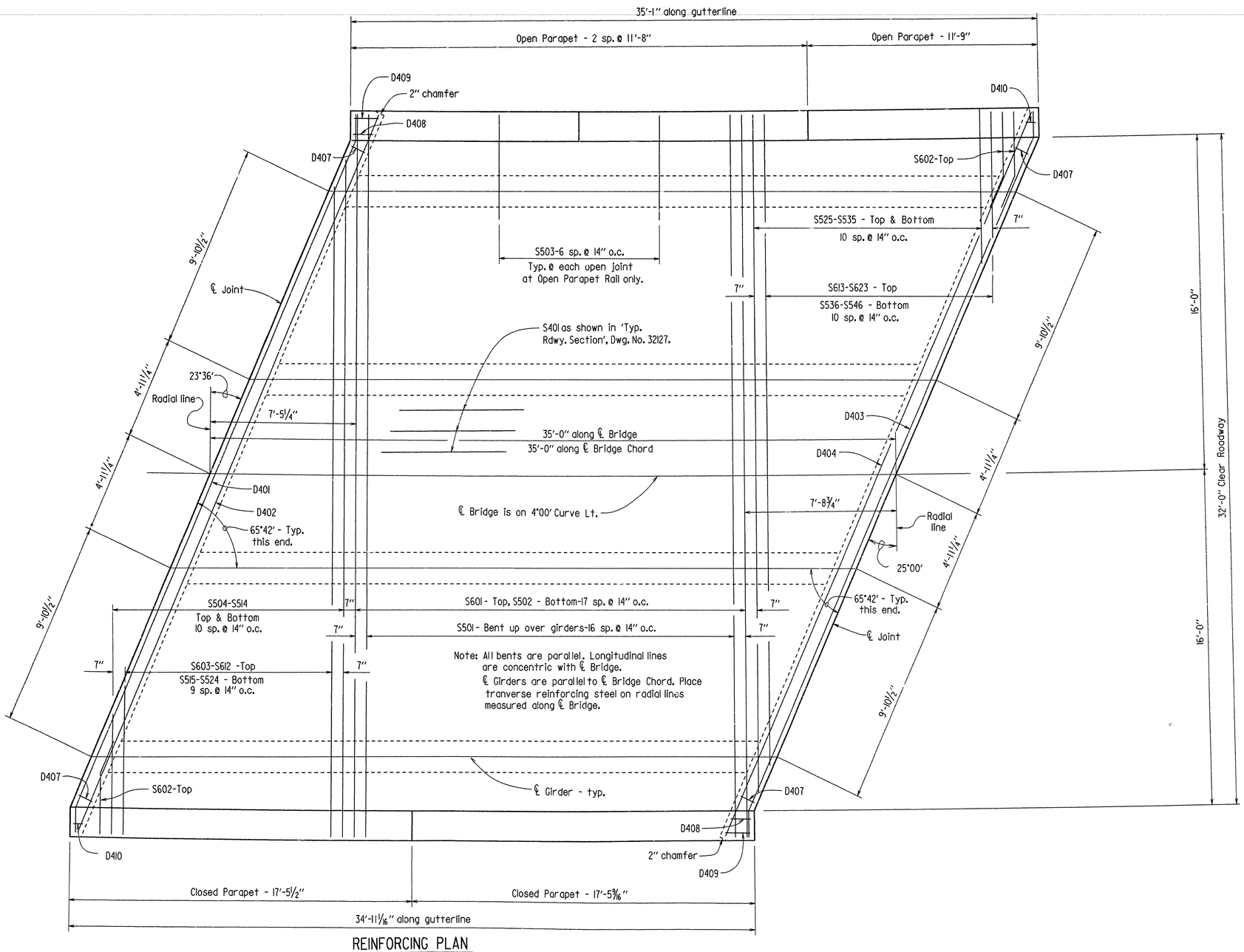

REINFORCING PLAN

Scale : ⅜" = 1'-0"

BAR LIST

MARK	NO. REQ'D.	LENGTH	P.D.
S401	71	34'-8"	Str.
D401	5	37'-5"	2"
D402	5	37'-7"	Str.
D403	5	37'-9"	2"
D404	5	38'-0"	Str.
D407	70	7'-10"	2"
D408	2	8'-0"	2"
D409	2	8'-5"	2"
D410	2	7'-6"	2"
G401	196	7'-10"	2"
G402	16	34'-6"	Str.
P401	60	6'-4"	2" *
P402	24	5'-6"	2" *
P403	12	11'-2"	Str.
P404	24	5'-10"	2" *
P405	24	3'-2"	2" *
P406	12	16'-11"	Str.
P407	36	5'-3"	2" *
S501	17	35'-2"	3"
S502	18	34'-6"	Str.
S503	14	5'-0"	Str.
S504-S514	2 ea.	Var. 5'-8" to 32'-4"	Str.
S515-S524	1 ea.	Var. 7'-0" to 31'-0"	Str.
S525-S535	2 ea.	Var. 7'-4" to 32'-4"	Str.
S536-S546	1 ea.	Var. 6'-0" to 31'-1"	Str.
S601	18	34'-6"	Str.
S602	3	5'-1"	4½"
S603-S612	1 ea.	Var. 7'-0" to 31'-0"	Str.
S613-S623	1 ea.	Var. 6'-0" to 31'-1"	Str.
P601	15	11'-2"	Str.
G301	8	34'-6"	Str.
G1001	16	34'-6"	Str.

BENDING DIAGRAMS

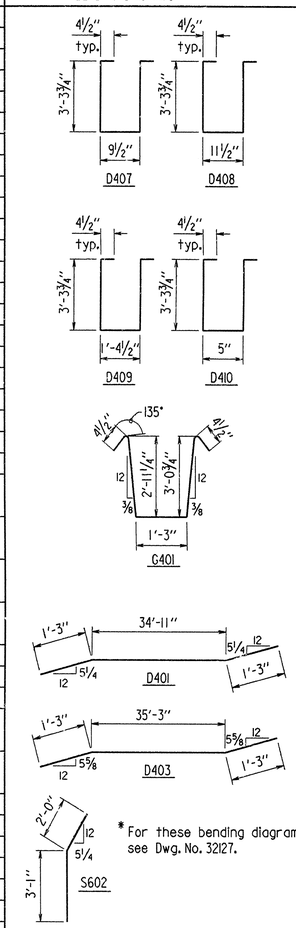

* For these bending diagrams see Dwg. No. 32127.

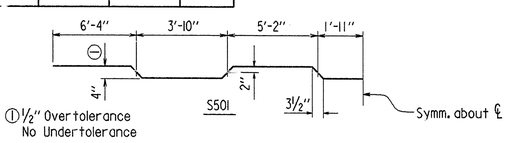

① ½" Overtolerance
No Undertolerance

Dimensions are out to out of bars.

STATE OF ARKANSAS
REGISTERED PROFESSIONAL ENGINEER
No. 1770
VIRAL PINKERTON

Viral Pinkerton
BRIDGE ENGINEER

DETAILS OF SPAN 2
MESSER CREEK

ROUTE SEC.

ARKANSAS STATE HIGHWAY COMMISSION

LITTLE ROCK, ARK.

DRAWN BY: KDH DATE: 31 MAY 91
CHECKED BY: DHP DATE: 6-20-91
DESIGNED BY: JWT DATE: 6-20-91
SCALE: AS NOTED

BRIDGE NO. 6415 DRAWING NO. 32129

KDHE514 1, 550, 3001, 3922 B3922.S2

DATE REVISED	DATE FILMED	DATE REVISED	DATE FILMED	FED. ROAD DIST. NO.	STATE	FED. AID PROJ. NO.	SHEET NO.	TOTAL SHEETS
				6	ARK.			
				JOB NO.		3922	36	80
				①	6415 - SPAN 3 - 32130			

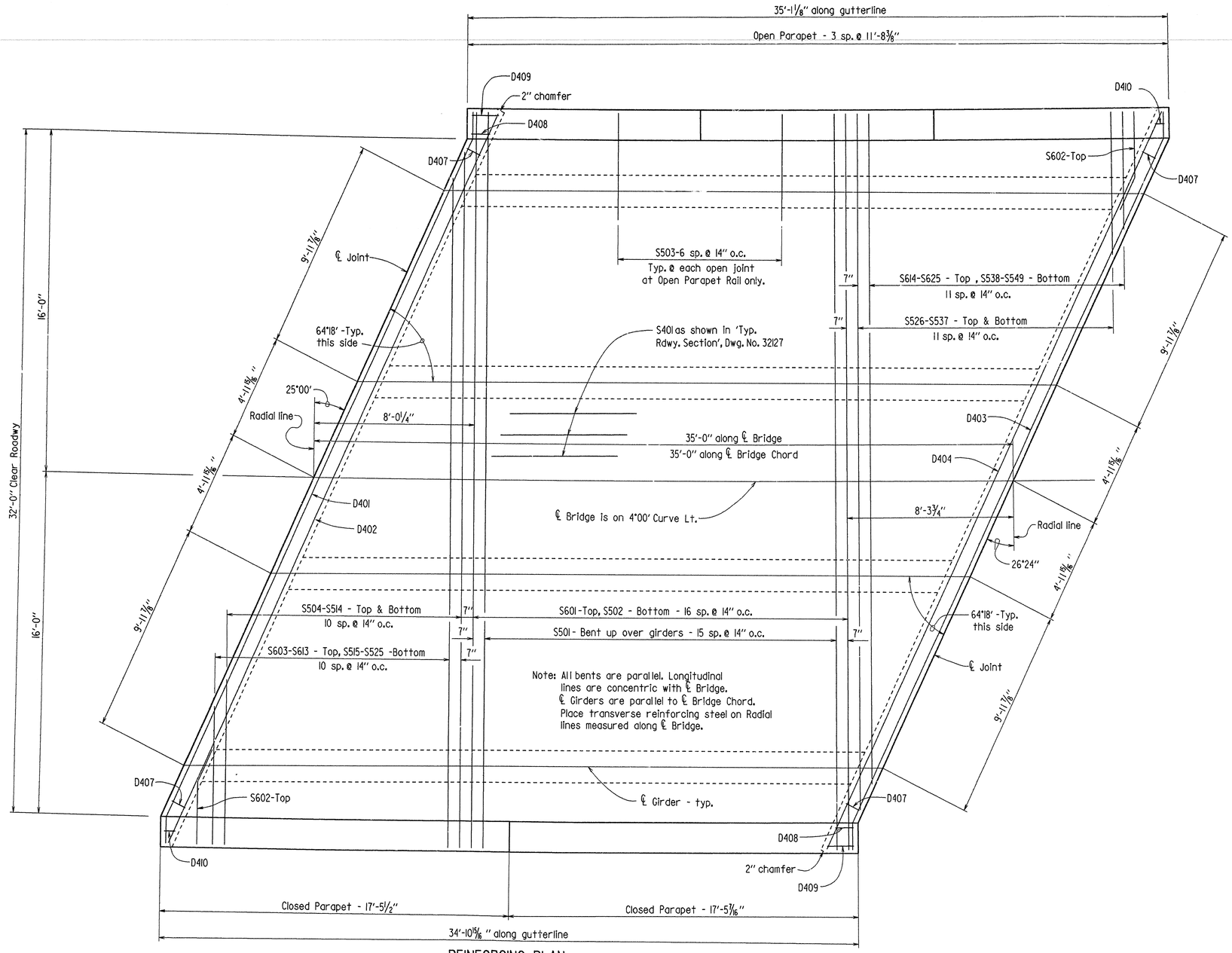

REINFORCING PLAN

Scale : 3/8" = 1' 0'

BAR LIST

MARK	NO. REQ'D.	LENGTH	P.D.
S401	71	34'-8"	Str.
D401	5	37'-9"	2"
D402	5	38'-0"	Str.
D403	5	38'-2"	2"
D404	5	38'-6"	Str.
D407	70	7'-10"	2"
D408	2	8'-0"	2"
D409	2	8'-5"	2"
D410	2	7'-6"	2"
G401	200	7'-10"	2"
G402	16	34'-6"	Str.
P401	60	6'-4"	2" *
P402	24	5'-6"	2" *
P403	12	11'-2"	Str.
P404	24	5'-10"	2" *
P405	24	3'-2"	2" *
P406	12	16'-11"	Str.
P407	36	5'-3"	2" *
S501	16	35'-2"	3"
S502	17	34'-6"	Str.
S503	14	5'-0"	Str.
S504-S514	2 ea.	Var. 7'-8" to 32'-7"	Str.
S515-S525	1 ea.	Var. 6'-5" to 31'-4"	Str.
S526-S537	2 ea.	Var. 6'-8" to 32'-7"	Str.
S538-S549	1 ea.	Var. 5'-6" to 31'-5"	Str.
S601	17	34'-6"	Str.
S602	2	5'-1"	4 1/2"
S603-S613	1 ea.	Var. 6'-5" to 31'-4"	Str.
S614-S625	1 ea.	Var. 5'-6" to 31'-5"	Str.
P601	15	11'-2"	Str.
G901	8	34'-6"	Str.
G1001	16	34'-6"	Str.

BENDING DIAGRAMS

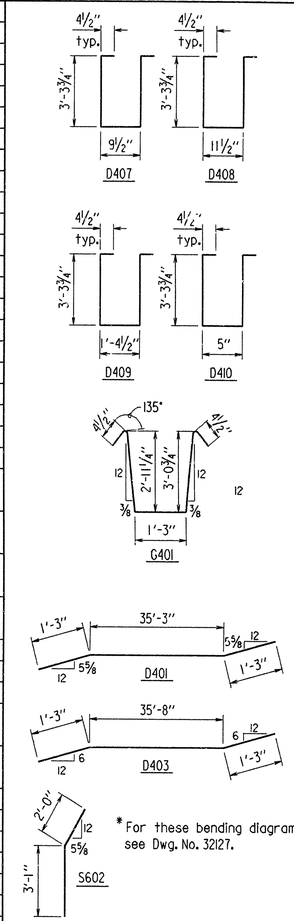

*For these bending diagrams see Dwg. No. 32127.

Dimensions are out to out of bars.

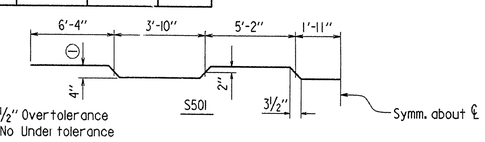

① 1/2" Overtolerance
No Under tolerance

STATE OF ARKANSAS
REGISTERED PROFESSIONAL ENGINEER
No. 1773
VERAL PINKERTON

Veral Pinkerton
BRIDGE ENGINEER

DETAILS OF SPAN 3
MESSER CREEK

ROUTE SEC.

ARKANSAS STATE HIGHWAY COMMISSION

LITTLE ROCK, ARK.

DRAWN BY: KDH DATE: 7 JUNE 91
CHECKED BY: DHP DATE: 6-20-91 SCALE: AS NOTED
DESIGNED BY: JWT DATE: 6-20-91

BRIDGE NO. 6415 DRAWING NO. 32130

KDHE514 1, 550, 3001, 3922 B3922.S3

DATE REVISED	DATE FILMED	DATE REVISED	DATE FILMED	FED. ROAD DIST. NO.	STATE	FED. AID PROJ. NO.	SHEET NO.	TOTAL SHEETS
				6	ARK.			
				JOB NO.		3922	37	80
				①	6415 - SPAN 4 - 32131			

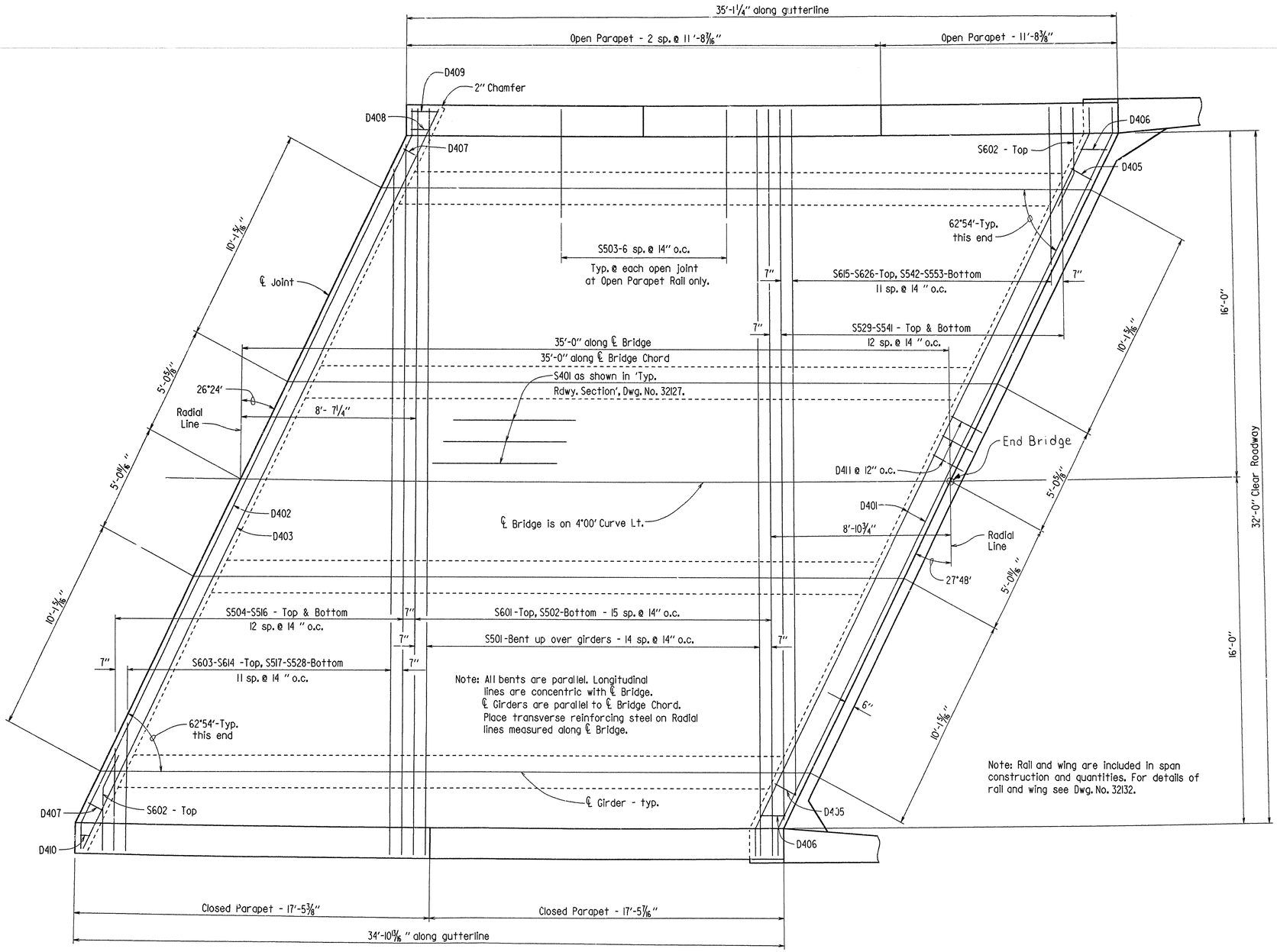

Note: Rail and wing are included in span construction and quantities. For details of rail and wing see Dwg. No. 32132.

BAR LIST

MARK	NO. REQ'D.	LENGTH	P.D.
S401	71	34'-8"	Str.
D401	11	38'-8"	2"
D402	5	38'-2"	2"
D403	5	38'-6"	Str.
D405	33	8'-3"	2"
D406	2	8'-5"	2"
D407	35	7'-10"	2"
D408	1	8'-0"	2"
D409	1	8'-5"	2"
D410	1	7'-6"	2"
D411	33	4'-5"	2"
G401	196	7'-10"	2"
G402	16	34'-6"	Str.
P401	60	6'-4"	2" *
P402	24	5'-6"	2" *
P403	12	11'-2"	Str.
P404	24	5'-10"	2" *
P405	24	3'-2"	2" *
P406	12	16'-11"	Str.
P407	36	5'-3"	2" *
S501	15	35'-2"	3"
S502	16	34'-6"	Str.
S503	14	5'-0"	Str.
S504-S516	2 ea.	Var. 4'-8" to 32'-10"	Str.
S517-S528	1 ea.	Var. 5'-11" to 31'-8"	Str.
S529-S541	2 ea.	Var. 6'-2" to 32'-10"	Str.
S542-S553	1 ea.	Var. 7'-3" to 31'-8"	Str.
S601	16	34'-6"	Str.
S602	[illegible]	5'-1"	4½"
S603-S614	1 ea.	Var. 5'-11" to 31'-8"	Str.
S615-S626	1 ea.	Var. 7'-3" to 31'-8"	Str.
P601	15	11'-2"	Str.
G901	8	34'-6"	Str.
G1001	16	34'-6"	Str.

BENDING DIAGRAMS

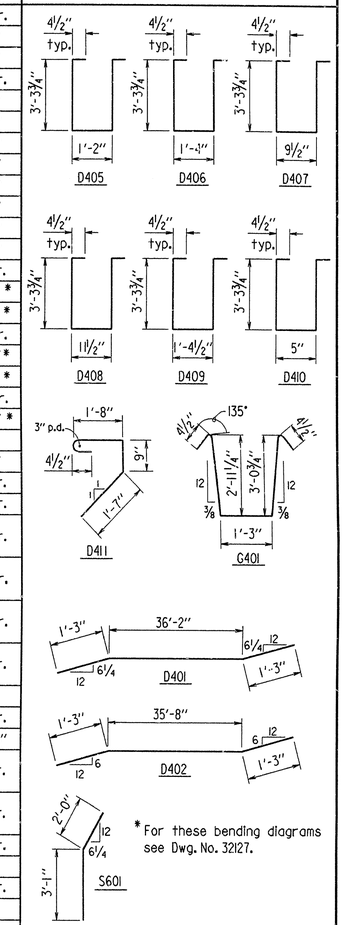

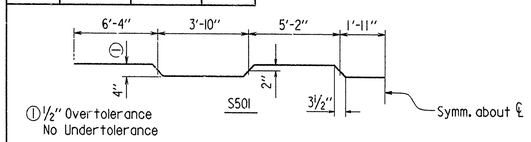

① ½" Overtolerance
No Undertolerance

Dimensions are out to out of bars.

STATE OF ARKANSAS
REGISTERED PROFESSIONAL ENGINEER
No. 1779
VERAL PINKERTON

Veral Pinkerton
BRIDGE ENGINEER

DETAILS OF SPAN 4
MESSER CREEK

ROUTE SEC.

ARKANSAS STATE HIGHWAY COMMISSION

LITTLE ROCK, ARK.

DRAWN BY: KDH DATE: 10 JUN 91
CHECKED BY: DHP DATE: 6-20-91
DESIGNED BY: JWT DATE: 6-20-91
SCALE: AS NOTED

BRIDGE NO. 6415 DRAWING NO. 32131

KDHE514 1, 550, 3001, 3922 B3922.S4

DATE REVISED	DATE FILMED	DATE REVISED	DATE FILMED	FED. ROAD DIST. NO.	STATE	FED. AID PROJ. NO.	SHEET NO.	TOTAL SHEETS
				6	ARK.			
				JOB NO.		3922	38	80

(1) 6415 - STD. WING - 32132

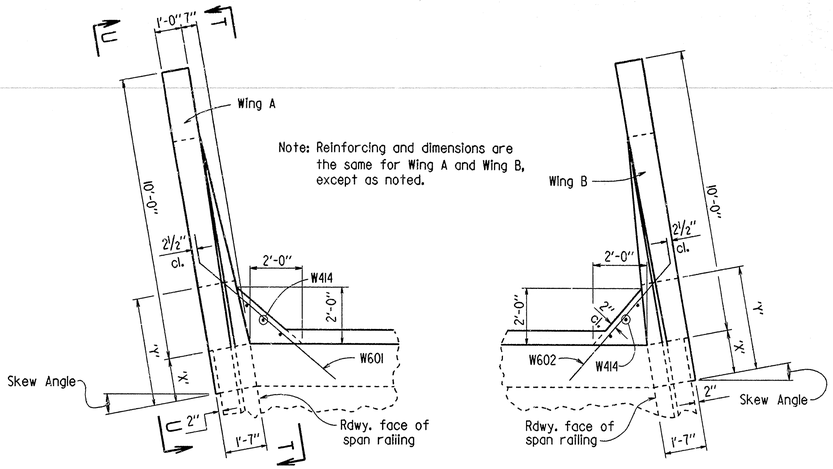

PLAN OF WING RAILING

⅜" = 1'-0"

Note: Boiled Linseed Oil Treatment shall be applied to the face and top of the wing parapet rail.

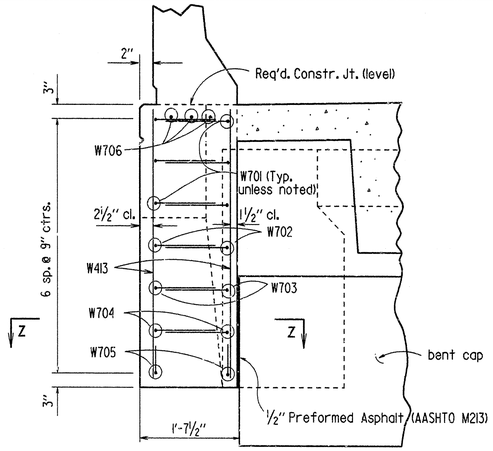

SECTION V - V

¾"=1'-0"

Note: ½" Preformed Asphalt shall be measured and paid for as Class S(AE) Concrete.

BAR LIST - TWO WING AND RAILS

MARK	NO. REQ'D.	LENGTH	A	B	PIN DIA.
R401	8	3'-11"			2"
R402	8	4'-0"			2"
R403	12	9'-8"			Str.
R404	12	4'-0"			Str.
R601	16	4'-5"			Str.
R602	6	5'-0"			Str.
W401	6	6'-3"	5'-1"	1'-2"	2"
W402	6	7'-5"			Str.
W403-W407	2 of each	Var. 3'-5" to 5'-8"	Var. 2'-2½" to 4'-6"	1'-2"	2"
W408-W412	2 of each	Var. 4'-6" to 6'-10"			Str.
W413	8	4'-8"			Str.
W414	6	3'-10"			Str.
W415	3	2'-9"			Str.
W416	2	2'-4"			Str.
W417	2	1'-7"			Str.
W418	3	2'-11"			Str.
W601	3	8'-1"	7'-3"	1'-0"	4½"
W602	3	5'-11"	5'-1"	1'-0"	4½"
W701	12	12'-4"	11'-4"	1'-2"	5¼"
W702	4	8'-8"	7'-8"	1'-2"	5¼"
W703	4	7'-4"	6'-4"	1'-2"	5¼"
W704	4	6'-1"	5'-1"	1'-2"	5¼"
W705	4	12'-7"			5¼"
W706	6	6'-0"			Str.

BENDING DIAGRAMS

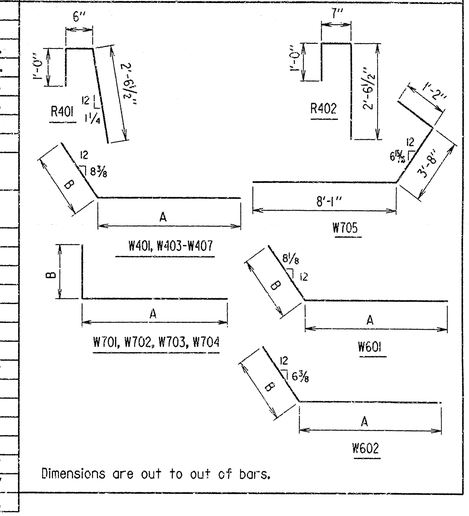

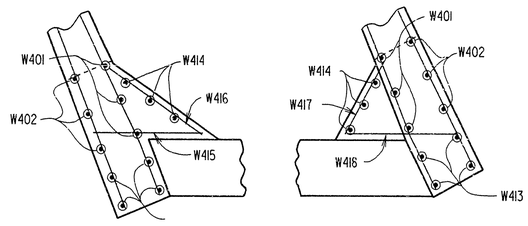

SECTION Z - Z

⅜" = 1'-0"

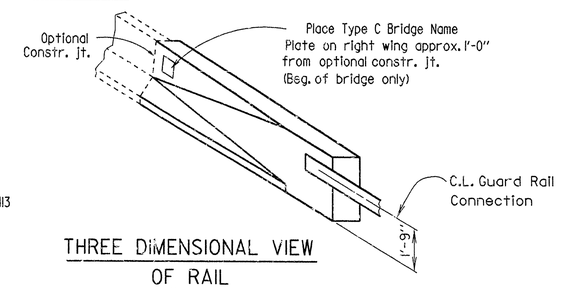

THREE DIMENSIONAL VIEW OF RAIL

No Scale

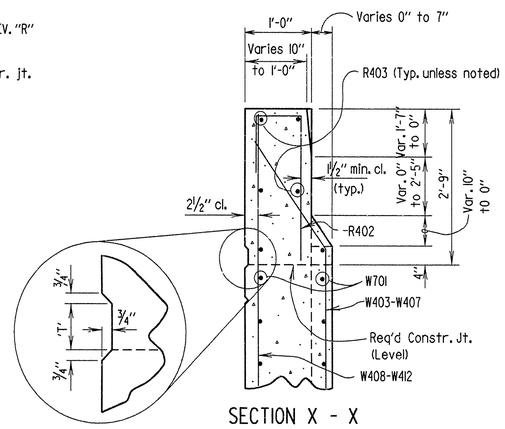

SECTION X - X

¾"=1'-0"

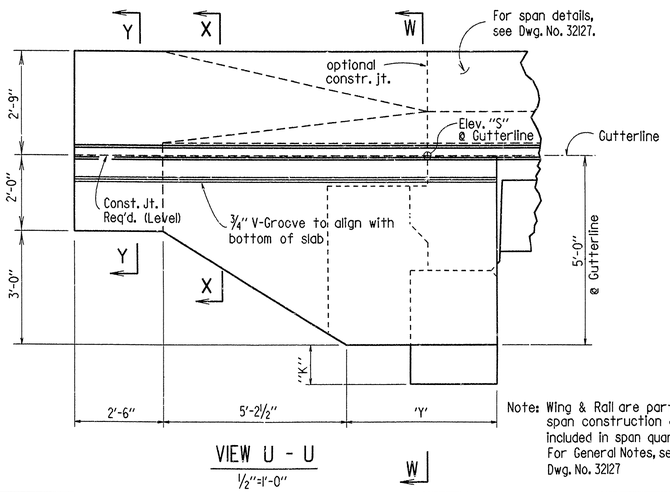

VIEW U - U

½"=1'-0"

Note: Wing & Rail are part of span construction and included in span quantities. For General Notes, see Dwg. No. 32127

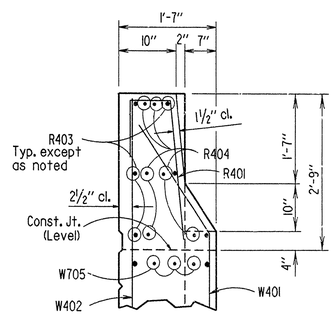

SECTION W - W

¾"=1'-0"

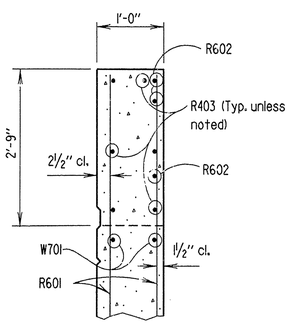

SECTION Y - Y

¾"=1'-0"

TABLE OF VARIABLES

			Elev. "R"	Elev. "S"	'K'	'T'	'X'	'Y'	Skew Angle
	Bent No. 1	Wing A	428.36	428.46	1'-2⅝"	3"	1'-7 7/16"	3'-10 15/16"	22°00'
		Wing B	425.85	425.97	1'-2⅝"	4 7/16"	1'-7½"	3'-11"	22°32'
	Bent No. 5	Wing A	428.99	428.12	1'-7 5/16"	4 7/16"	1'-8⅜"	3'-11 7/8"	28°04'
		Wing B	431.19	430.94	1'-6 15/16"	3"	1'-8¼"	3'-11¾"	27°24'

Tabular Data By: KDH Date: 11 JUN 91

Checked By: JWT Date: 6-19-91

Note: For details of guard rail connections, see Drwg. No. GR-8 & GR-8A

STATE OF ARKANSAS REGISTERED PROFESSIONAL ENGINEER NO. 1770

Russel Pinkerton
BRIDGE ENGINEER

STANDARD DETAILS
FOR WING AND RAIL
MESSER CREEK
ROUTE SEC.
ARKANSAS STATE HIGHWAY COMMISSION
LITTLE ROCK, ARK.

ALTERED BY: LM DATE: 11-4-87
CHECKED BY: C.J.F. DATE: 11-25-87
DESIGNED BY: STD. DATE:
SCALE: As Shown

BRIDGE NO. 6415 DRAWING NO. 32132

KDHE514 B3922XXX3.WI 1, 550,3001, 3922