DATE REVISED	DATE FILMED	DATE REVISED	DATE FILMED	FED. ROAD DIST. NO.	STATE	FED. AID PROJ. NO.	SHEET NO.	TOTAL SHEETS
				6	ARK.			
				JOB NO.		3922	22	80

(1) 6413 & 6414-STD. WING-32116

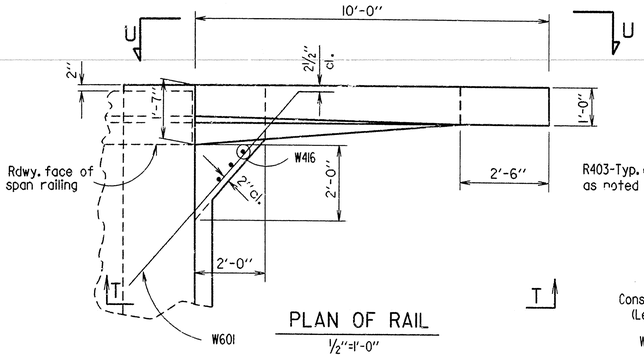

PLAN OF RAIL

½"=1'-0"

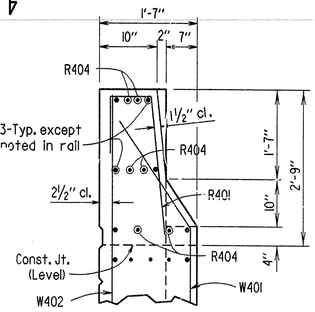

SECTION W-W

¾"=1'-0"

Note: ½" Preformed Asphalt shall be measured and paid for as Class S(AE) Concrete.

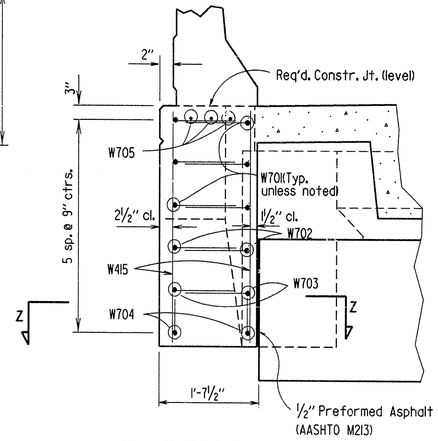

SECTION V-V

¾"=1'-0"

BAR LIST - TWO WING & RAILS

MARK	NO. REQ'D.	LENGTH	A	B	PIN DIA.
R401	8	3'-11"			2"
R402	8	4'-0"			2"
R403	12	9'-8"			Str.
R404	12	4'-0"			Str.
R601	16	4'-5"			Str.
R602	6	5'-0"			Str.
W401	4	5'-6"	4'-4"	1'-2"	2"
W402	4	6'-8"			Str.
W403-W408	2 of each	Var. 3'-4" to 5'-5"	Var. 2'-2" to 4'-3"	1'-2"	2"
W409-W414	2 of each	Var. 4'-6" to 6'-7"			Str.
W415	8	3'-11"			Str.
W416	8	3'-1"			Str.
W417	6	2'-7"			Str.
W418	4	1'-10"			Str.
W601	8	7'-0"	6'-2"	1'-0"	4½"
W701	12	12'-2"	11'-2"	1'-2"	5¼"
W702	4	8'-2"	7'-2"	1'-2"	5¼"
W703	4	6'-4"	5'-4"	1'-2"	5¼"
W704	4	12'-2"			5¼"
W705	6	6'-0"			Str.

BENDING DIAGRAMS

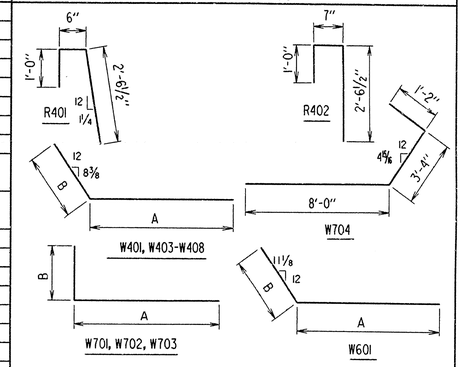

Dimensions are out to out of bars.

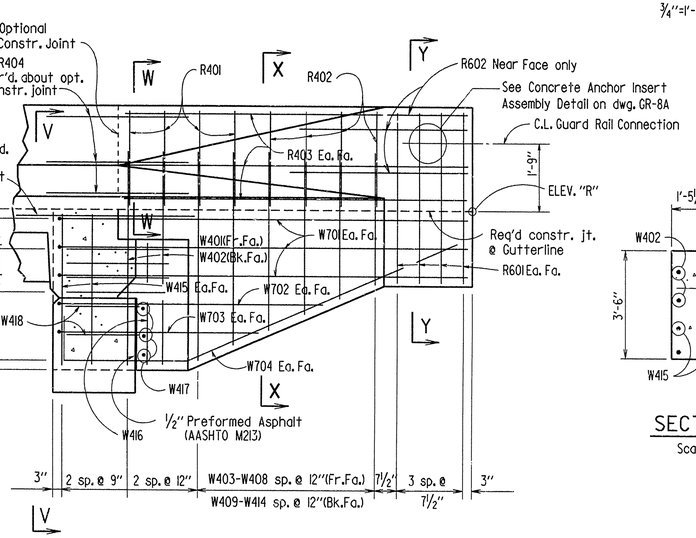

SECTION T-T

½"=1'-0"

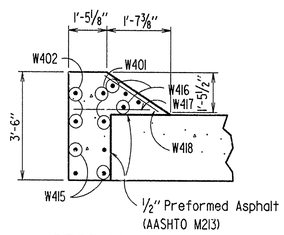

SECTION Z-Z

Scale: ⅜" = 1'-0"

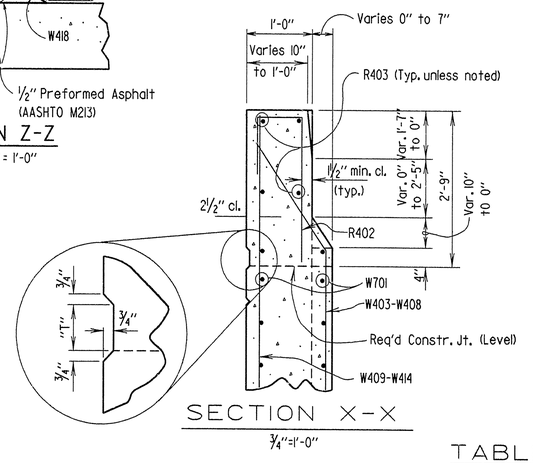

SECTION X-X

¾"=1'-0"

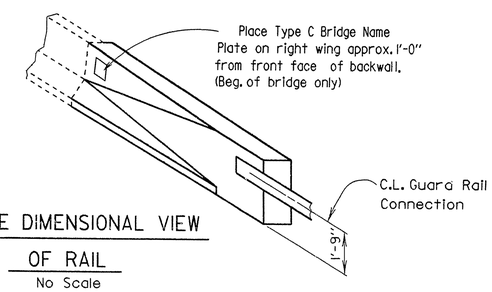

THREE DIMENSIONAL VIEW OF RAIL

No Scale

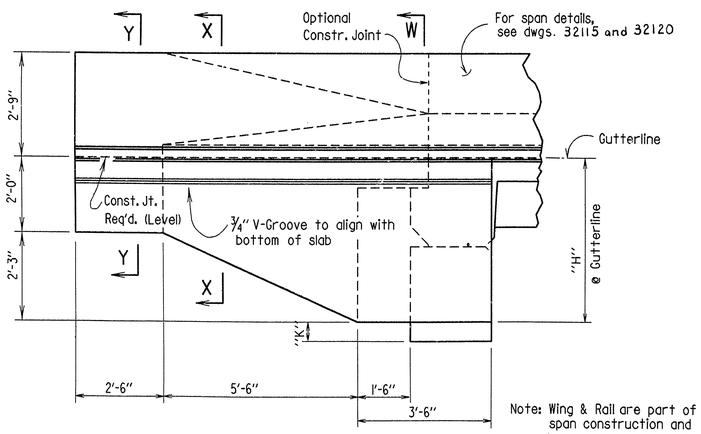

VIEW U-U

½"=1'-0"

Note: Wing & Rail are part of span construction and included in span quantities. For General Notes, see dwgs. 32115 and 32120

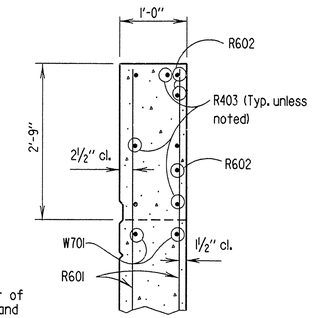

SECTION Y-Y

¾"=1'-0"

TABLE OF VARIABLES

			Elev. "R"	"H"	"K"	"T"	
Br. No. 6413	Bent No. 1	Wing A	426.70	4'-3"	2'-0"	3⅝"	
		Wing B	426.70	4'-3"	2'-0"	3⅝"	
	Bent No. 5	Wing A	426.70	4'-3"	2'-0"	3⅝"	
		Wing B	426.70	4'-3"	2'-0"	3⅝"	
Br. No. 6414	Bent No. 1	Wing A	439.18	4'-3"	2'-0"	3⅝"	
		Wing B	439.18	4'-3"	2'-0"	3⅝"	
	Bent No. 4	Wing A	439.18	4'-3"	2'-0"	3⅝"	
		Wing B	439.18	4'-3"	2'-0"	3⅝"	

Tabular Data By: KDH Date: 11 JUN 91

Checked By: JWT Date: 6-18-91

Note: For details of guard rail connections, see Drwg. No. GR-8 & GR-8A.

Kasal Pinkerton
BRIDGE ENGINEER

STANDARD DETAILS FOR WING AND RAILS HOLLY AND LITTLE HOLLY CREEKS

ROUTE SEC.

ARKANSAS STATE HIGHWAY COMMISSION

LITTLE ROCK, ARK.

ALTERED BY: LM DATE: 11-4-87
CHECKED BY: C.J.F. DATE: 11-25-87
DESIGNED BY: STD. DATE:

SCALE: As Shown

BRIDGE NO. 6313 & 6314 DRAWING NO. 32116

KDHE514 B3922XXXI.WI 1.550 3001, 3992

DATE REVISED	DATE FILMED	DATE REVISED	DATE FILMED	FED. ROAD DIST. NO.	STATE	FED. AID PROJ. NO.	SHEET NO.	TOTAL SHEETS
				6	ARK.			
				JOB NO.		3922	23	80

(1) 6414 -LAYOUT- 32117

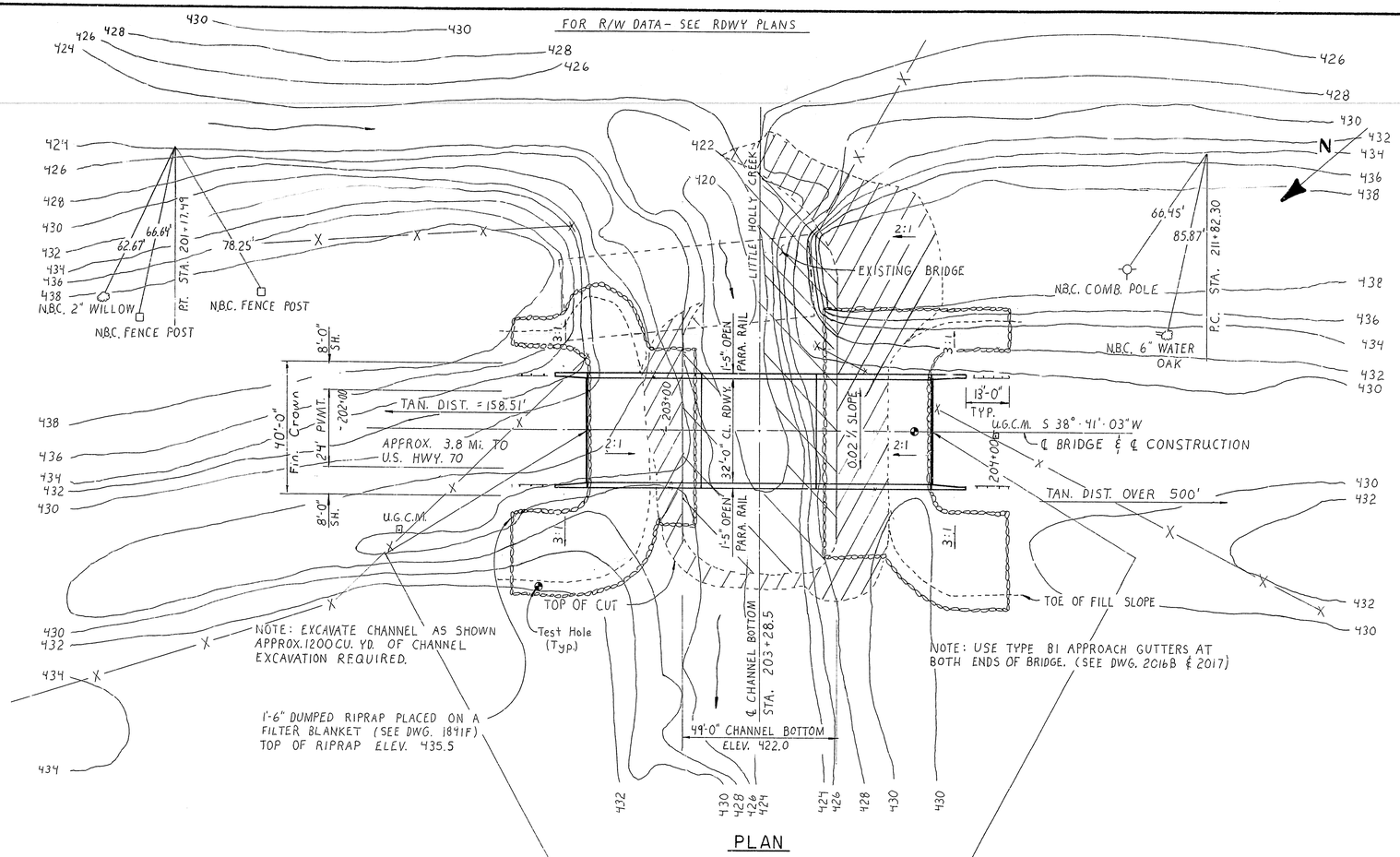

PLAN

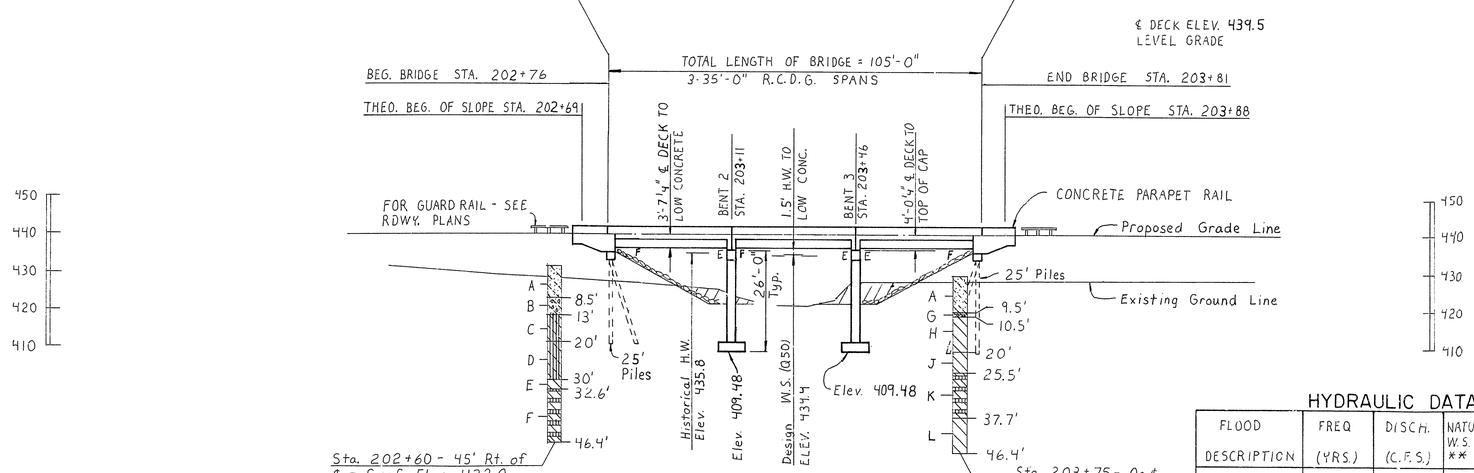

ELEVATION

DA. = 9.60 SQ. Mi.

Thin, Hard Cemented Silt Seams were Encountered from 15.0' to 15.6' and from 33.5' to 37.7'. Calcareous Clayey Silt was Encountered from 20.0' to 30.0'.

HYDRAULIC DATA

FLOOD DESCRIPTION	FREQ (YRS.)	DISCH. (C.F.S.)	NATURAL W.S. ELEV. **	W.S. ELEV. WITH BACKWATER
DESIGN	50	6030	434.4	435.3
OVERTOPPING	>500	–	–	–
BASE	100	7250	434.8	436.2
EXTREME	500	10500	435.7	439.0

** Unconstricted water surf. without struct. or rdwy. apprs.

GENERAL NOTES

BENCH MARK: Nail in side of Power Pole, 153' Rt. of center line Sta. 199+54, Elev. 434.05.

CONSTRUCTION SPECIFICATIONS: Arkansas State Highway and Transportation Department Standard Specifications for Highway Construction, 1991 edition, with applicable supplemental specifications and special provisions.

DESIGN SPECIFICATIONS: AASHTO Standard Specifications for Highway Bridges, 1989 with current interim specifications.

LIVE LOADING: HS20 METHOD OF DESIGN: Load Factor

SEISMIC PERFORMANCE CATEGORY: A

MATERIALS AND STRENGTHS:

Class S(AE) Concrete (superstructure)	f'c = 4,000 psi
Class S Concrete (substructure)	f'c = 3,500 psi
Reinforcing Steel (A615 or A617, GR. 60)	Fy = 60,000 psi
Structural Steel (A36)	Fy = 36,000 psi

BORING LOGS: Boring logs may be obtained from the Programs and Contracts Division.

STEEL PILING: Piling in Bents 1 and 4 shall be HP 10x42 and shall be driven with an approved air, steam, or diesel hammer to a minimum safe bearing capacity of 44 tons per pile and to a minimum penetration of 10' below natural ground. Lengths of piling shown are for estimating quantities and for use in determining payment for cut-off and build-up in accordance with the standard specifications. Piles in end bents to be driven after embankment to bottom of cap is in place.

FOOTINGS: Footings shall be set to a maximum elevation of 412.0 and a minimum of 0.5' into very dense Clayey Silt or very hard Calcareous Clay. Foundations for footings shall be prepared in accordance with Section 801.04 of the Standard Specifications.

BRIDGE DECK: The concrete bridge deck shall be given a tine finish as specified for final finishing in subsection 802.20 for Class 5 Bridge Roadway Surface Finish.

BOILED LINSEED OIL: Boiled linseed oil treatment shall be applied to the roadway surface and to the face and top of the concrete parapet rail.

DETAIL DRAWINGS:	DRAWING NO.
End Bents	32118
Intermediate Bents	32119
35' R.C.D.G. spans	32120
Steel Piling	14995A
Type C Bridge Name Plate	2389A
Embankment Construction	1888A
Dumped Riprap and Filter Blanket	1891F
Computing Excavation for Structures	1891F
Approach Slabs and Gutters	2016B & 2017

EXISTING BRIDGE: The existing bridge No. 3134 (log mile 3.84) is 25'-6" wide and 76' long and consists of concrete precast slab spans supported by a concrete substructure. The existing bridge is located approximately 45 feet upstream from the proposed new bridge.

REMOVAL AND SALVAGE: After the new bridge is opened to traffic, the existing bridge (No. 3134) shall be removed in accordance with section 205 of the Standard Specifications. All material from the existing bridge shall become the property of the contractor except precast slab spans & bridge railing.

BORING LEGEND

A. Moist, Loose, Brown and Gray Sand with Clay Seams.
B. Wet, Medium Dense, Brown and Gray Clayey Sand and Gravel.
C. Moist, Dense, Brown Clayey Silt.
D. Moist, Very Dense, Brown to Gray Clayey Silt.
E. Moist, Very Hard, Gray Calcareous Clay.
F. Alternating Layers of Hard, Gray Limestone and Moist, Very Hard, Brown and Gray Calcareous Clay.
G. Wet, Medium Dense Brown Clayey Sand and Gravel.
H. Moist, Hard, Brown and Gray Calcareous Clay.
J. Moist, Very Hard, Brown to Gray Calcareous Clay.
K. Alternating Layers of Moist, Very Hard, Gray Calcareous Clay and Hard, Gray Limestone.
L. Moist, Very Hard, Gray and Brown to Brown Calcareous Clay.

LAYOUT OF BRIDGE OVER LITTLE HOLLY CREEK DIERKS-CENTER POINT BRS. AND APPRS. HOWARD COUNTY

ROUTE 4 SEC. 3

ARKANSAS STATE HIGHWAY COMMISSION

LITTLE ROCK, ARK.

STATE OF ARKANSAS REGISTERED PROFESSIONAL ENGINEER No. 1779 DEAN PRIGMORE

DRAWN BY: JWT DATE: 8-7-90
CHECKED BY: CJF DATE: 2-21-91
DESIGNED BY: DFL DATE: 8-7-90
SCALE: 1" = 20'

BRIDGE ENGINEER

BRIDGE NO. 6414 DRAWING NO. 32117

DATE REVISED	DATE FILMED	DATE REVISED	DATE FILMED	FED. ROAD DIST. NO.	STATE	FED. AID PROJ. NO.	SHEET NO.	TOTAL SHEETS
				6	ARK.			
				JOB NO.		3922	24	80
				(1) 6414	END BENT 32118			

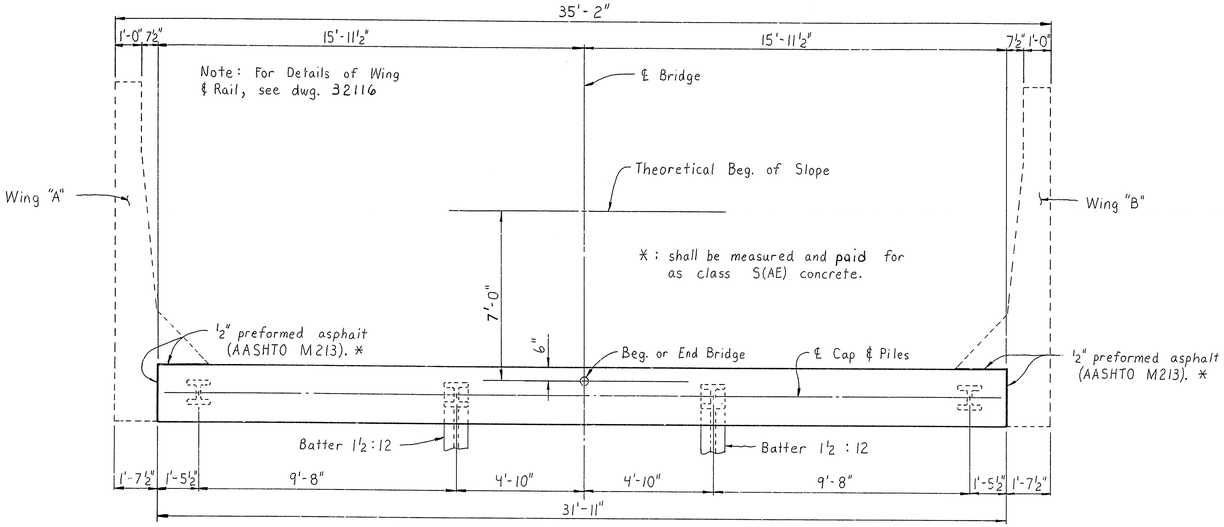

PLAN OF END BENT

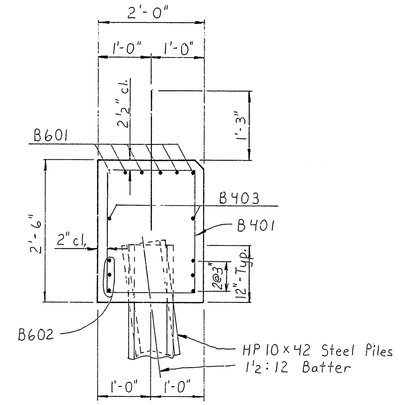

SECTION A-A
Scale ¾" = 1'-0"

BAR LIST

MARK	No. Req'd. End Bt.		Length	Pin. Dia.	Bending Diagram
B401	40		7'-11"	2"	
B402	12		5'-9"	2"	
B403	2		31'-7"	Str.	
D400	21		2'-6	Str.	
B601	6		32'-11"	4½"	
B602	6		31'-7"	Str.	

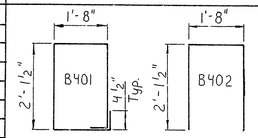

Dimensions are out to out of bars.

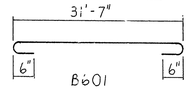

END BENT NOTES

All concrete shall be Class "S" with a minimum 28 day compressive strength f'c = 3,500 psi. Concrete shall be poured in the dry and all exposed corners to be chamfered 3/4" unless otherwise noted.

All reinforcing steel shall conform to ASTM A615 or A617, Grade 60 (yield strength = 60,000 psi.).

For additional information, see layout.

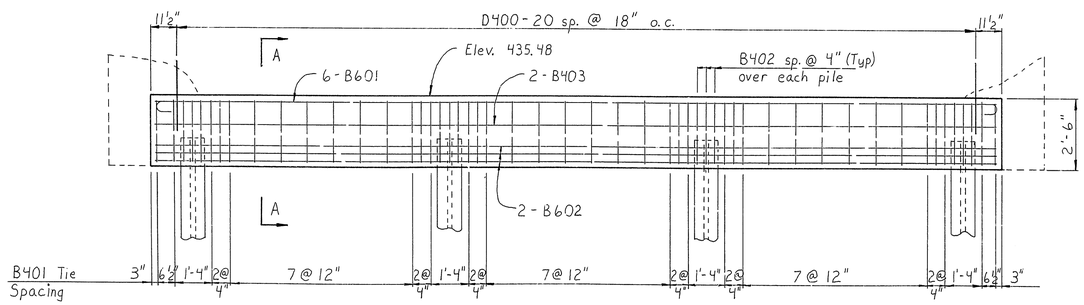

ELEVATION OF END BENT

DETAILS OF STD. PILE END BENTS
LITTLE HOLLY CREEK
FOR 35'-0" RCDG SPANS
32'-0" CL RDWY

ROUTE SEC.

ARKANSAS STATE HIGHWAY COMMISSION
LITTLE ROCK, ARK.

DRAWN BY: JWT DATE: 5-10-91
CHECKED BY: DHP DATE: 6-7-91
DESIGNED BY: JWT DATE: 6-20-91
SCALE: ⅜" = 1'-0" or as shown

BRIDGE ENGINEER

BRIDGE NO. 6414 DRAWING NO. 32118

DATE REVISED	DATE FILMED	DATE REVISED	DATE FILMED	FED. ROAD DIST. NO.	STATE	FED. AID PROJ. NO.	SHEET NO.	TOTAL SHEETS
				6	ARK.			
				JOB NO.		3922	25	80
				1	6414	BENTS 32119		

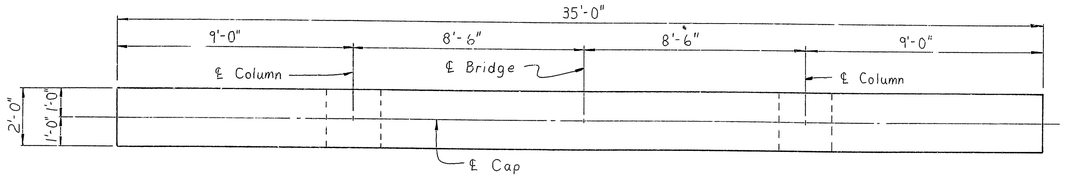

PLAN
Scale 3/8" = 1'-0"

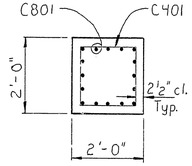

SECTION B-B
Scale ½" = 1'-0"

* Use only for Exp.-Fix Bents. See Layout. For Fix side only.

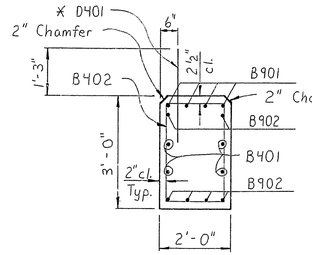

SECTION A-A
Scale ½" = 1'-0"

BAR LIST PER BENT

MARK	No. Req'd.	Length	A	B	P.D.
B401	4	34'-8"			Str.
B402	52	8'-11	1'-8"	2'-7½"	2"
B403	6	6'-9"	1'-8"	2'-7½"	2"
B901	4	37'-2"	34'-8"	10"	9"
B902	5	34'-8"			Str.
D401	**	2'-6"			Str.
C401	48	6'-8"	1'-7"	1'-7"	2"
C801	32	23'-8"			Str.
F601	60	8'-10"	7'-6"	6"	4½"
F801	32	7'-2"	6'-3"	8"	6"

Bending Diagrams

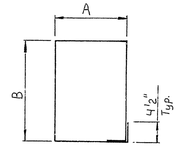

B402, C401

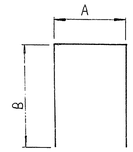

B403

F601, B901

F801

Dimensions are out to out of bars.

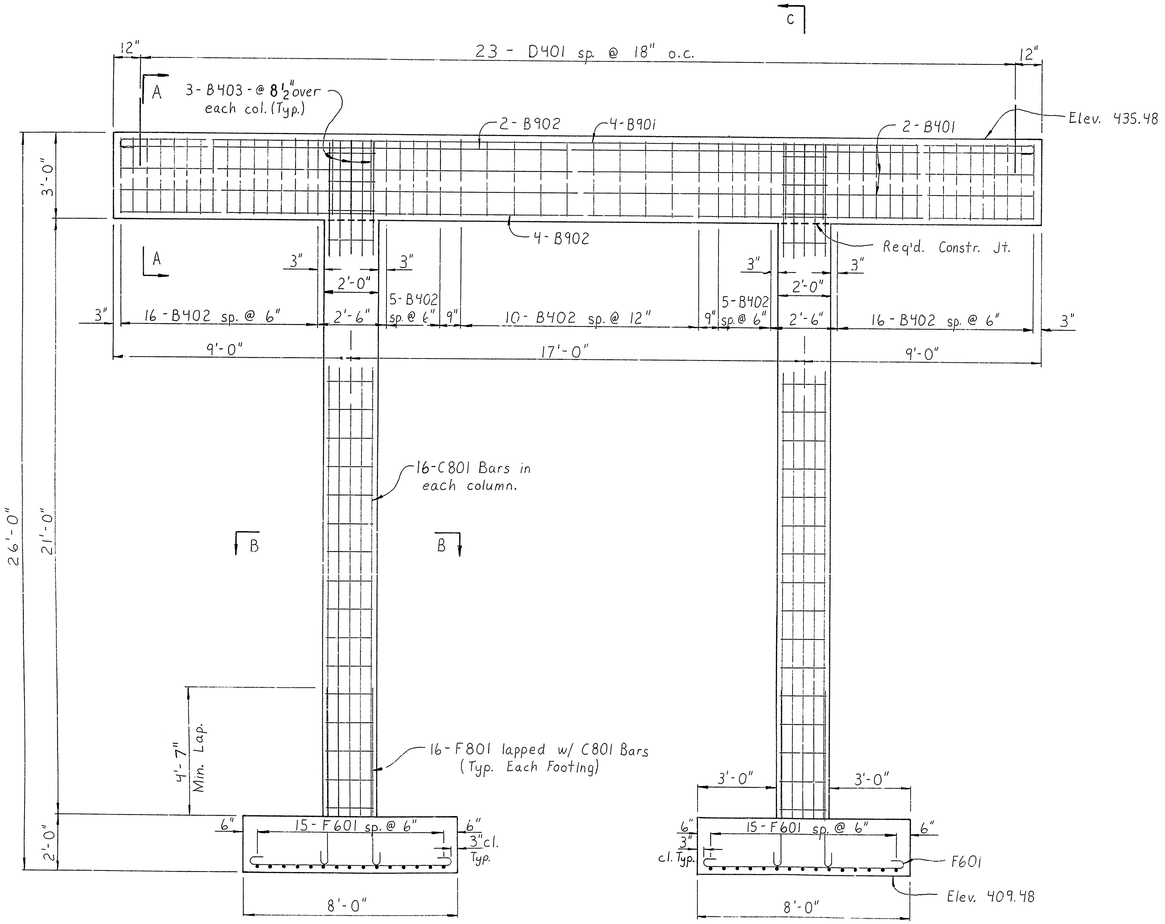

ELEVATION
Scale 3/8" = 1'-0"
Looking Forward

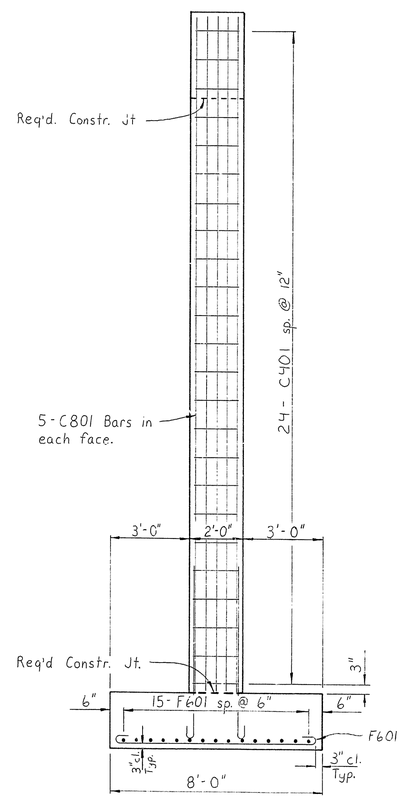

SECTION C C
Scale 3/8" = 1'-0"

INT. BENT NOTES

All concrete shall be Class "S" with a minimum 28 day compressive strength f'c = 3,500 psi. Concrete shall be poured in the dry and all exposed corners to be chamfered 3/4" unless otherwise noted.

All reinforcing steel shall conform to ASTM A615 or A617, Grade 60 (yield strength = 60,000 psi.).

For additional information see layout.

Soil Pressure 7.5 Group III
** - 23 For Fix-Exp.
- 0 For Exp.-Exp.

STATE OF ARKANSAS
REGISTERED PROFESSIONAL ENGINEER
No. 1779
VERAL PINKERTON

BRIDGE ENGINEER

DETAILS OF BENTS 2&3
LITTLE HOLLY CREEK

ROUTE SEC.

ARKANSAS STATE HIGHWAY COMMISSION
LITTLE ROCK, ARK.

DRAWN BY: JWT DATE: 5-8-91
CHECKED BY: DHP DATE: 6-7-91
DESIGNED BY: JWT DATE: 6-20-91
SCALE: As Shown

BRIDGE NO. 6414 DRAWING NO. 32119

DATE REVISED	DATE FILMED	DATE REVISED	DATE FILMED	FED. ROAD DIST. NO.	STATE	FED. AID PROJ. NO.	SHEET NO.	TOTAL SHEETS
				6	ARK.			
				JOB NO.		3922	26	80
				(1) 6414		STD. R.C.D.G. 32120		

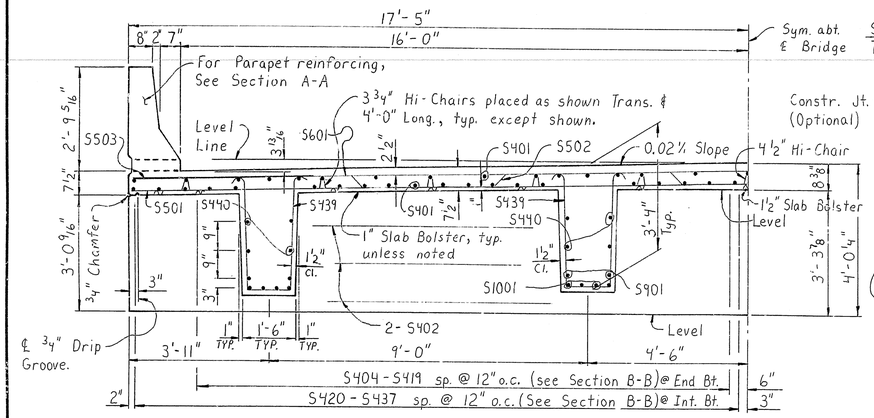

HALF-SECTION THRU. RDWY.

1/2" = 1'-0"

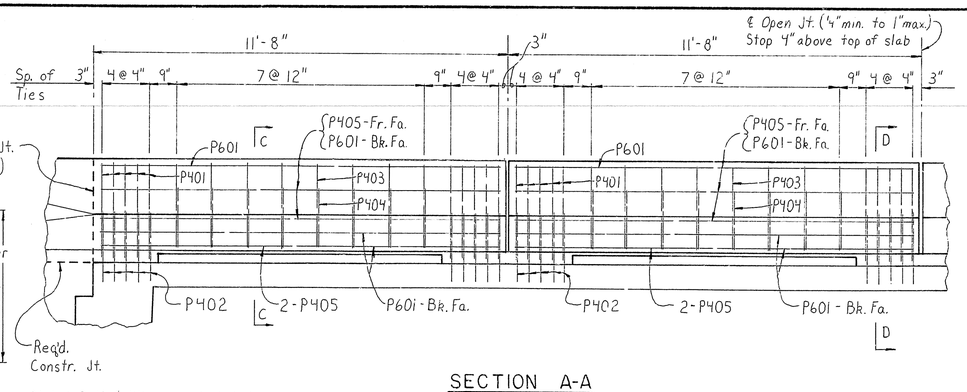

SECTION A-A

1/2" = 1'-0"

Note: Rail & Wing are included in span construction and included in span quantities, see dwg. 32116

Note: Boiled Linseed Oil Treatment shall be applied to the roadway surface and to the face and top of the span and wing parapet rail.

BENDING DIAGRAM

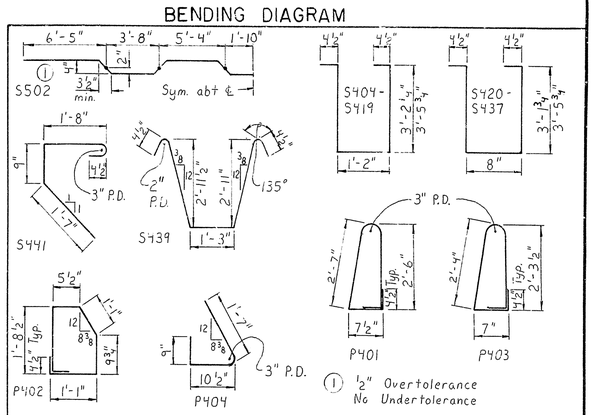

BAR LIST - PER SPAN

Mark	No. Req'd. End	No. Req'd. Int.	Length	Pin Dia.
S401	71	71	34'-7"	Str.
S402	19	16	34'-6'	Str.
S404-S419	2 ea.		8'-0" 8'-7"	2"
S420-S437	2 ea	4ea	7'-5" 8'-1"	2"
S439	196	200	7'-9"	2"
S440	16	16	34'-7"	Str.
S441	28		4'-5"	2"
S501	30	30	34'-6"	Str.
S502	29	29	35'-2"	3"
S503	28	28	5'-0"	Str.
S601	30	30	34'-6"	Str.
S901	8	8	34'-7"	Str.
S1001	16	16	34'-7"	Str.
P401	60	60	6'-4"	2"
P402	60	60	5'-6"	2"
P403	48	48	5'-10"	2"
P404	48	48	3'-2"	2"
P405	24	24	11'-3"	Str.
P601	30	30	11'-3"	Str.

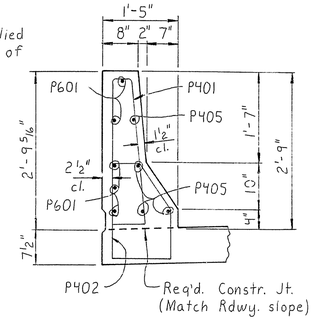

SECTION D-D

3/4" = 1'-0"

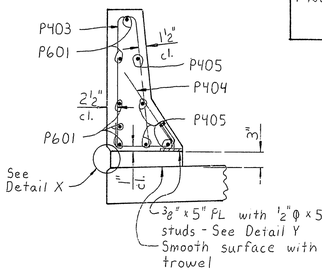

SECTION C-C

3/4" = 1'-0"

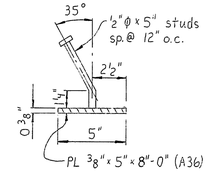

DETAIL Y

N.T.S.

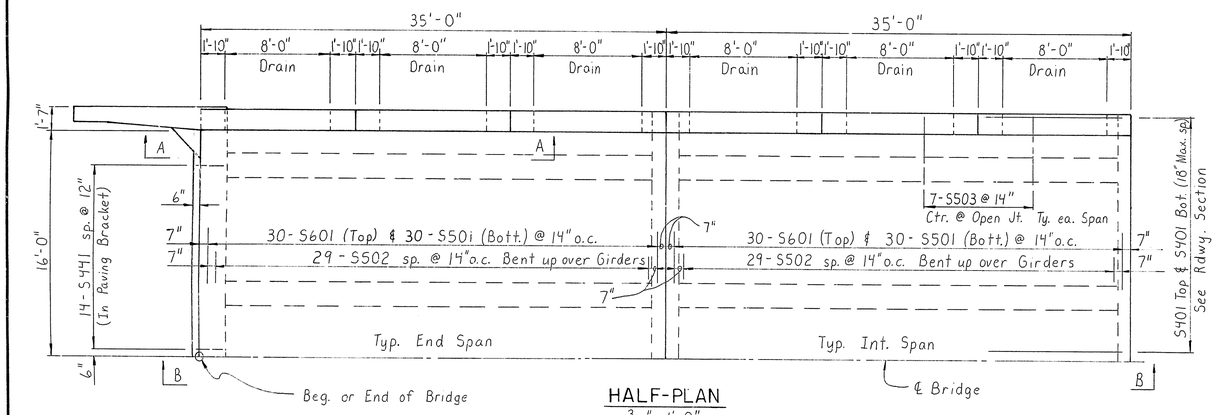

HALF-PLAN

3/16" = 1'-0"

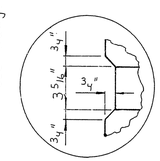

DETAIL X

N.T.S.

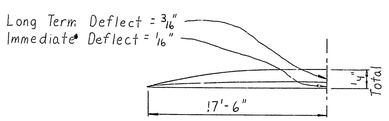

CAMBER DIAGRAM

N.T.S.

Note: All joints to be cleaned by sand blasting or other approved methods before pouring Jt.

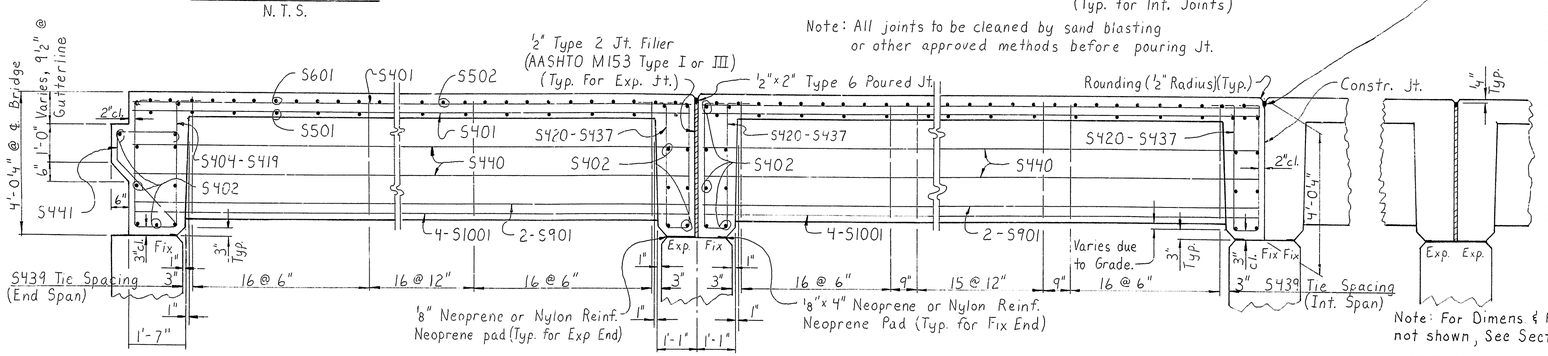

SECTION B-B

1/2" = 1'-0"

Note: See Layout for Joint Fixity.

DETAIL OF EXP EXP JT.

1/2" = 1'-0"

Note: For Dimens & Reinf. not shown, See Sect. B-B

The surface of the 3/8'' plate which will not be in contact with concrete shall receive two coats of paint in the shop. The coats shall be those specified as Shop Prime Coat and Finish Coat in section 638 of the Standard Specifications.

Studs shall be 5'' long, granular flux filled, solid fluxed or equal and automatically end welded to the plate. Studs and plates to be measured and paid for as Class S(AE) Concrete. Structural steel shall meet the requirements of Section 807.

All concrete to be Class S(AE). All exposed corners to be chamfered 3/4'' unless otherwise noted. The concrete in the girders, end diaphragms, and deck shall be placed in one continuous pour for interior spans. The concrete in the girders, deck, end diaphragms, and wings shall be placed in one continuous pour for end spans.

Reinforcing steel to be ASTM A615 or A617, Grade 60. Bar supports of reinforcing bars will not be paid for directly, but will be considered subsidiary to the item ''Reinforcing Steel''.

Neoprene Pad, Type 2 Joint Filler and Type 6 Poured Joint Material shall be measured and paid for as Class S(AE) Concrete. Neoprene material shall meet the requirements of Section 808.02 of the Standard Specifications and shall be in one piece for the full width and length of the bearing and may be 50, 60, or 70 durometer elastomer.

Construction Specifications: Arkansas State Highway and Transportation Department Standard Specifications for Highway Construction, 1991 Edition with applicable supplemental specifications and special provisions.

Design Specifications: AASHTO Standard Specifications for Highway Bridges, 1989 Edition with current interim specifications.

Live Loading: HS20 Method of Design: Load Factor

Dead Load: INT. GIRDER 1882 PLF * ; EXT. GIRDER 1827 PLF *

*Includes Future Wearing Surface: 200 PLF

Live Load: 1.5000 wheels + impact

Unit Stresses: 28 Day Compressive Strength of Class S(AE) Concrete = 4000 PSI Yield Strength of Reinforcing Steel = 60,000 PSI.

ARKANSAS REGISTERED PROFESSIONAL ENGINEER No. 1770

BRIDGE ENGINEER

DETAILS OF STANDARDS
35'-0" R.C. DECK GIRDERS
32'-0" CL. ROADWAY

ROUTE SEC.

ARKANSAS STATE HIGHWAY COMMISSION

LITTLE ROCK, ARK.

DRAWN BY: JWT DATE: 5-6-91
CHECKED BY: DHP DATE: 6-6-91
DESIGNED BY: JWT DATE: 6-20-91
SCALE: As Shown

BRIDGE NO. 6414 DRAWING NO. 32120

307287