DATE REVISED	DATE FILMED	DATE REVISED	DATE FILMED	FED. ROAD DIST. NO.	STATE	FED. AID PROJ. NO.	SHEET NO.	TOTAL SHEETS
				6	ARK.			
				JOB NO.		040027	22	69
				06732		LAYOUT	38832	

Use Type Special Approach Gutters at both ends of Bridge. For details, see drwg. no. 38848.

For R/W Data and Guard Rail - see Roadway Plans

Note : Excavate the existing embankment to Elev. 335.0 Approximate Channel excavation = 180 m³.

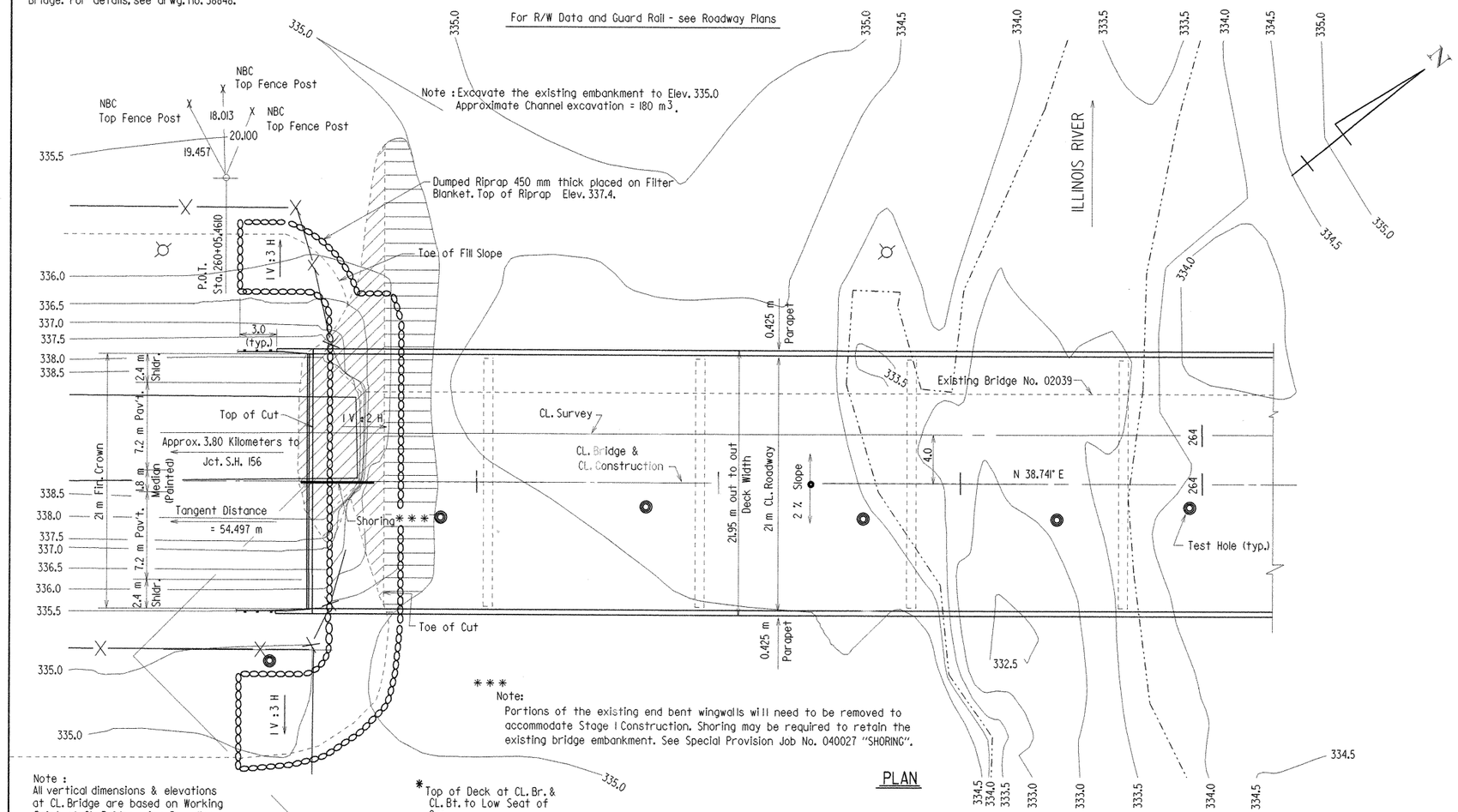

* * *
Note:
Portions of the existing end bent wingwalls will need to be removed to accommodate Stage 1 Construction. Shoring may be required to retain the existing bridge embankment. See Special Provision Job No. 040027 "SHORING".

PLAN

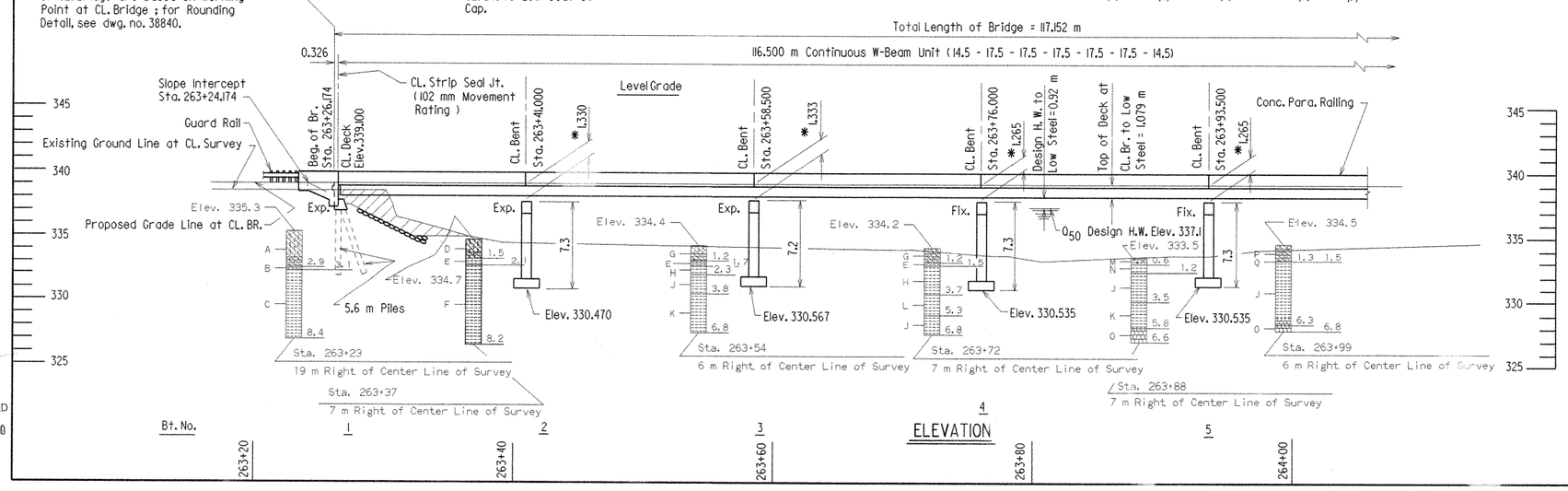

ELEVATION

GENERAL NOTES

BENCH MARK: C.P.S. in C.P. 14.171 m Lt. Sta. 264+50.243, Elev. 336.956.

CONSTRUCTION SPECIFICATIONS: Arkansas State Highway and Transportation Department Standard Specifications for Highway Construction (1996 edition) with applicable supplemental specifications and special provisions. Unless otherwise noted in the plans, Section and subsection refer to the Standard Construction Specifications.

DESIGN SPECIFICATIONS: AASHTO Standard Specifications for Highway Bridges (1996 edition) with current interim specifications.

LIVE LOADING: MS 18 METHOD OF DESIGN: Load Factor
SEISMIC PERFORMANCE CATEGORY: A

MATERIALS AND STRENGTHS:

Class S(AE) Concrete (superstructure)	f'c = 28.0 MPa
Class S Concrete (substructure)	f'c = 24.0 MPa
Reinforcing Steel (ASTM A 615/A 615M-96a, Gr. 420)	fy = 420 MPa
Structural Steel (AASHTO M270, Gr. 345W)	Fy = 345 MPa
Structural Steel (AASHTO M270, Gr. 250)	Fy = 250 MPa

BORING LOGS: Boring logs may be obtained from the Programs and Contracts Division.

STEEL PILING: Piling in End Bents 1 and 8 shall be HP 310 x 79 and shall be driven with an approved air, steam, or diesel hammer to a minimum safe bearing capacity of 490 kN per pile and into the material designated as hard shale on the boring legend. Lengths of piling shown are for estimating quantities and for use in determining payment for cut-off and build-up in accordance with the Standard Specifications. Piles in end bents to be driven after embankment to bottom of cap is in place.

FOOTINGS: Footings shall be set a minimum of 2.1 m into material designated as hard shale on the boring legend. Foundations for footings shall be prepared in accordance with section 801.04. Rock excavations shall be made to neat lines of the concrete footings. Care shall be exercised to avoid shattering of rock faces by excessive blasting. Concrete in footings shall be poured directly against excavated surfaces of rock. For details of footing protection see drwg. no. 38834.

BRIDGE DECK: The concrete bridge deck shall be given a tine finish as specified for final finishing in subsection 802.19 for Class 5 Tined Bridge Roadway Surface Finish.

DETAIL DRAWINGS:	DRAWING NO.
End Bents	38835 thru 38837
Intermediate Bents	38838 & 38839
116.5 m Cont. W-Beam Unit	38840 thru 38847
Steel Piling	36505
Dumped Riprap and Filter Blanket	36501
Type Special Approach Gutters	38848
Stage Construction	38834

EXISTING BRIDGE: The existing bridge No. 02039 is 8.4 m wide and 112.8 m long. The The superstructure consists of 7 concrete deck girder spans and 3 W-Beam spans with a concrete deck supported by a concrete substructure.

REMOVAL AND SALVAGE: The existing bridge (02039) shall be removed in accordance with Section 205. All material from the existing bridge shall become the property of the Contractor. Partial or complete removal of the existing end and intermediate bents, including footings, will be required to avoid interference with new construction.

Maintenance of Traffic : Traffic shall be maintained in accordance with the Stage Construction Sequence.

Note : All dimensions are in meters unless otherwise noted.

STATE OF ARKANSAS
Edward T. Fain
REGISTERED PROFESSIONAL ENGINEER
No. 3915
8-24-00
EDWARD T. FAIN

BRIDGE ENGINEER

SHEET 1 OF 3
LAYOUT OF BRIDGE OVER ILLINOIS RIVER
ILLINOIS RIVER STR. & APPRS.
(PRAIRIE GROVE) (S)
WASHINGTON COUNTY
ROUTE 62 SEC. 1

ARKANSAS STATE HIGHWAY COMMISSION

LITTLE ROCK, ARK.

DRAWN BY: J.P.S.	DATE: 7-19-94	FILENAME: B040027X1.L11			
CHECKED BY: AMS	DATE: 3-31-98	SCALE: 1:200			
DESIGNED BY: R.L.W.	DATE: 7-1-97				

BRIDGE NO. 06732 DRAWING NO. 38832

A H METRIC D

MICROFILMED OCT 31 2000

DATE REVISED	DATE FILMED	DATE REVISED	DATE FILMED	FED. ROAD DIST. NO.	STATE	FED. AID PROJ. NO.	SHEET NO.	TOTAL SHEETS
				6	ARK.			
				JOB NO.		040027	23	69
				1	06732	LAYOUT	38833	

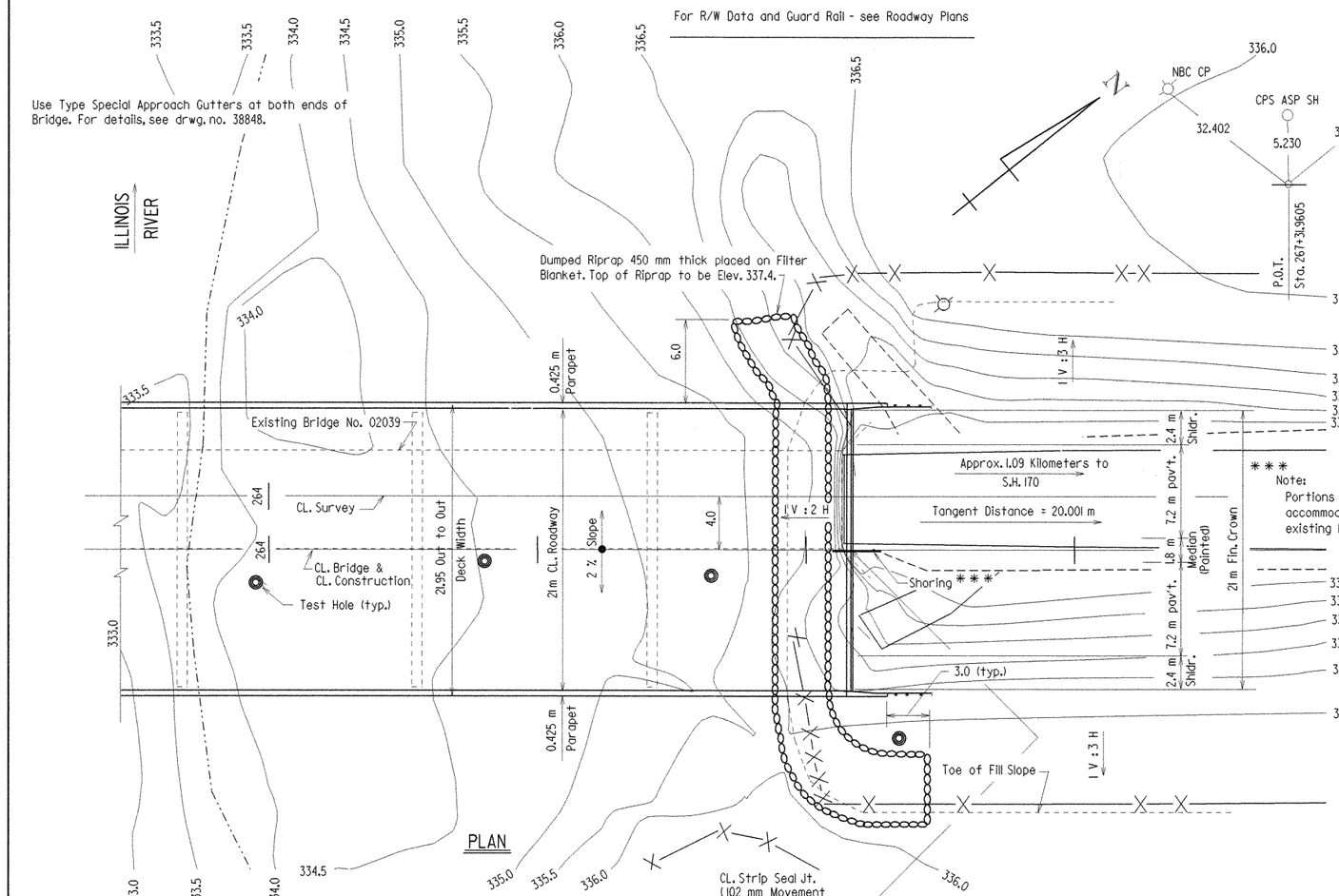

Boring Legend

A-Moist, Very Soft, Brown Sandy, Silty Clay
B-Soft to Medium Hard, Dark Gray Weathered Shale
C-Hard, Dark Gray Shale with some Gray Limestone Seams
D-Moist, Very Soft, Brown Sandy, Silty Clay
E-Medium Hard, Dark Gray Weathered Shale
F-Hard, Dark Gray Shale with some Thin Gray Limestone Seams
G-Moist, Soft, Brown Sandy, Silty Clay
H-Hard, Dark Gray Fractured Shale
J-Hard, Dark Gray Shale
K-Hard, Dark Gray Shale with some Thin White Calcite Seams
L-Hard, Dark Gray Shale with White Calcite Seams
M-Wet, Dense, Brown and Gray Sand and Gravel
N-Medium Hard, Brown and Gray Weathered Shale
O-Hard, Gray Limestone
P-Moist, Medium Stiff, Brown Sandy, Silty Clay with some Gravel
Q-Medium Hard, Gray and Brown Weathered Shale
R-Moist, Medium Stiff to Stiff, Brown Sandy, Silty Clay
S-Moist, Soft to Medium Stiff, Brown Sand, Silty Clay
T-Medium Hard, Dark Gray Shale with some Weathered Shale Seams
U-Hard, Gray Limestone with Dark Gray Shale Seams
V-Moist, Medium Stiff, Brown Sandy, Silty Clay

*** Note:
Portions of the existing end bent wingwalls will need to be removed to accommodate Stage I Construction. Shoring may be required to retain the existing bridge embankment. See Special Provision Job No. 040027 "SHORING".

'N' VALUES

Sta. 263+23 - 19 m Right of Center Line of Survey
1.2- 1.5, N=0
2.7- 3.0, N=44

Sta. 263+37 - 7 m Right of Center Line of Survey
1.0- 1.3, N=0

Sta. 263+72 - 7 m Right of Center Line of Survey
1.1- 1.4, N=46

Sta. 263+99 - 6 m Right of Center Line of Survey
1.2- 1.5, N=68

Sta. 264+16 - 5 m Right of Center Line of Survey
1.2- 1.5, N=9

Sta. 264+33 - 6 m Right of Center Line of Survey
1.3- 1.6, N=6
2.6- 2.7, N=60

Sta. 264+47 - 18 m Right of Center Line of Survey
1.2- 1.5, N=8
2.7- 3.0, N=8

Note : All dimensions are in meters unless otherwise noted.

Note :
All vertical dimensions & elevations at CL. Bridge are based on Working Point at CL. Bridge ; for Rounding Detail, see dwg. no. 38840.

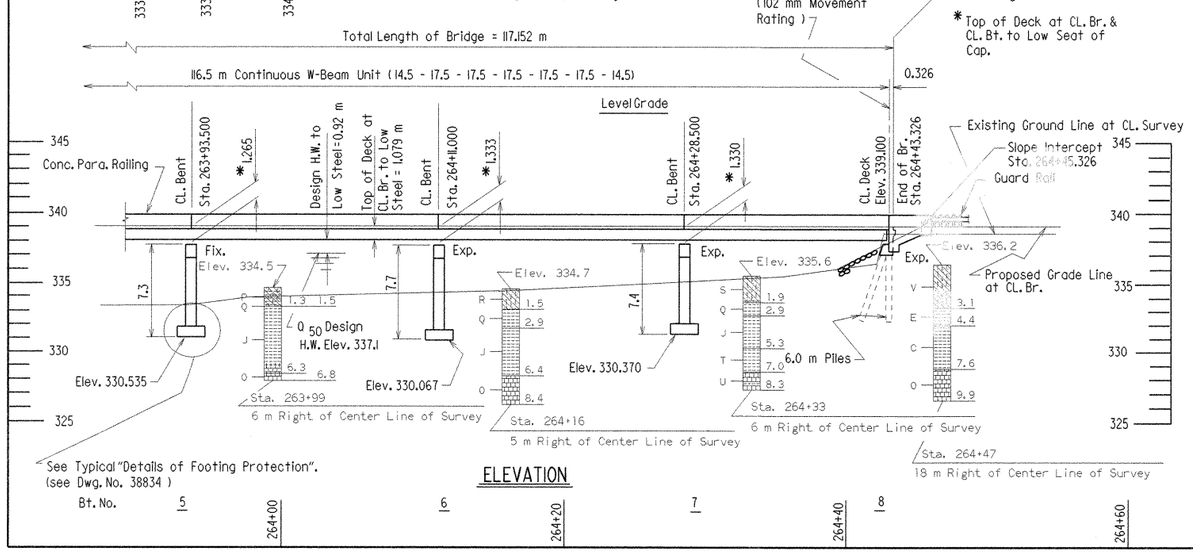

HYDRAULIC DATA

FLOOD DESCRIPTION	FREQUENCY	DISCHARGE (CMS)	** NATURAL WATER SURFACE ELEVATION (m)	WATER SURFACE ELEV. WITH BACKWATER (m)
DESIGN	Q50	710	337.1	337.7
BASIC	Q100	860	337.3	337.9
EXTREME	Q500	1290	337.7	338.7
OVERTOPPING	Q102	880	———	338.0

DRAINAGE AREA = 140.12 km^2
HISTORICAL H.W. ELEVATION = 337.8

** Unconstricted water surface without structure or roadway approaches.

STATE OF ARKANSAS
Edward T. Crain
REGISTERED PROFESSIONAL ENGINEER
No. 3915
3-31-98
EDWARD T. CRAIN

BRIDGE ENGINEER

SHEET 2 OF 3
LAYOUT OF BRIDGE OVER
ILLINOIS RIVER
ILLINOIS RIVER STR. & APPRS.
(PRAIRIE GROVE) (S)
WASHINGTON COUNTY
ROUTE 62 SEC. 1
ARKANSAS STATE HIGHWAY COMMISSION
LITTLE ROCK, ARK.

DRAWN BY: J.P.S. DATE: 7-21-94 FILENAME: B040027X1.L12
CHECKED BY: AMS DATE: 3-31-98 SCALE: 1:200
DESIGNED BY: R.L.W. DATE: 7-1-97
BRIDGE NO. 06732 DRAWING NO. 38833

METRIC

MICROFILMED
OCT 31 2000

DATE REVISED	DATE FILMED	DATE REVISED	DATE FILMED	FED. ROAD DIST. NO.	STATE	FED. AID PROJ. NO.	SHEET NO.	TOTAL SHEETS
				6	ARK.			
				JOB NO.		040027	24	60
				(1)	06732	LAYOUT	38834	

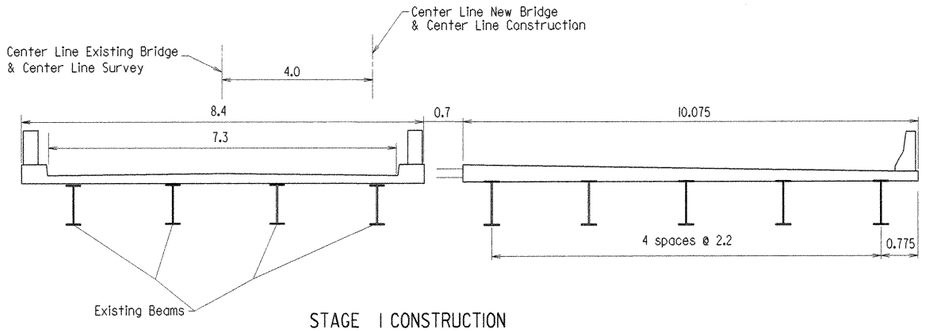

STAGE I CONSTRUCTION

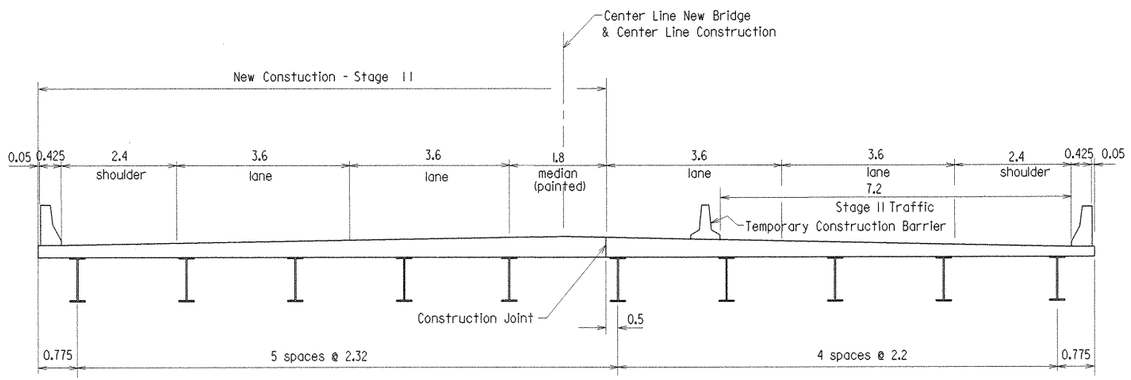

STAGE II CONSTRUCTION

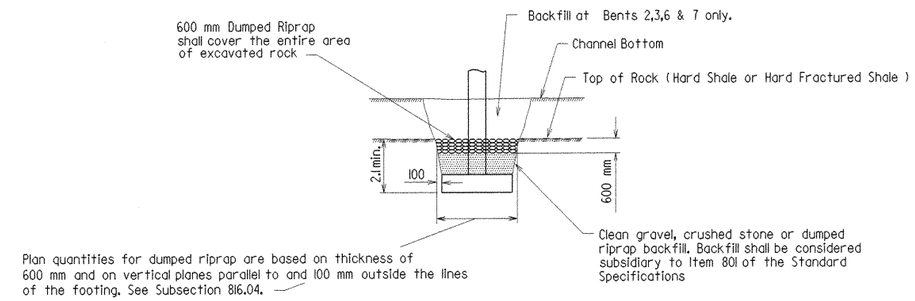

DETAILS OF FOOTING PROTECTION

Note : All dimensions are in meters unless otherwise noted.

MICROFILMED
OCT 31 2000

STATE OF ARKANSAS
Edward T. Fain
REGISTERED PROFESSIONAL ENGINEER
No. 3915
8-24-00
EDWARD T. FAIN

BRIDGE ENGINEER

SHEET 3 OF 3

LAYOUT OF BRIDGE OVER
ILLINOIS RIVER
ILLINOIS RIVER STR. & APPRS.
PRAIRIE GROVE (HWY. 62)
WASHINGTON COUNTY

ROUTE 62 SEC. 1

ARKANSAS STATE HIGHWAY COMMISSION
LITTLE ROCK, ARK.

DRAWN BY: J.P.S. DATE: 8-5-94 FILENAME: B040027XI.LI3
CHECKED BY: AMS DATE: 3-31-98 SCALE: No Scale
DESIGNED BY: C.A.B. DATE: 9-16-97
BRIDGE NO. 06732 DRAWING NO. 38834

AHD METRIC

DATE REVISED	DATE FILMED	DATE REVISED	DATE FILMED	FED. ROAD DIST. NO.	STATE	FED. AID PROJ. NO.	SHEET NO.	TOTAL SHEETS
				6	ARK.			
				JOB NO.		040027	25	69
				1	06732	End Bent		38835

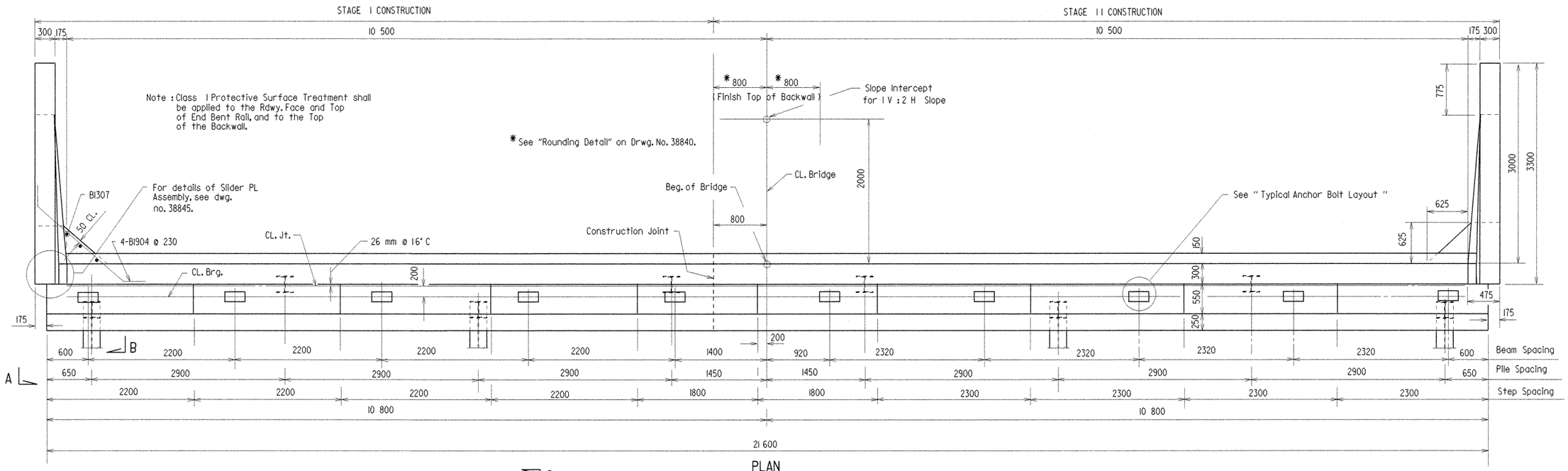

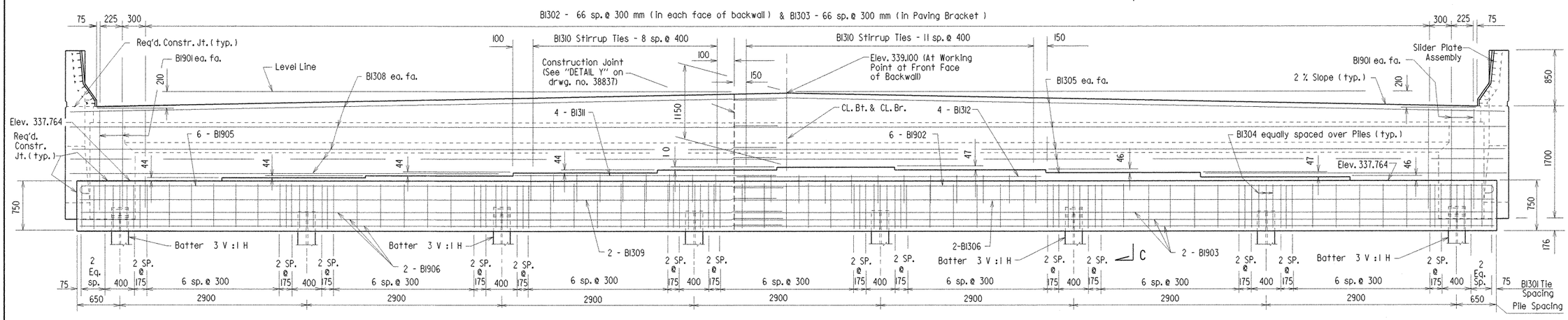

Note : For Details of Wingwalls and Reinforcing Bending Diagrams, see dwg. no. 38837.

STATE OF ARKANSAS
Edward T. Fain
REGISTERED PROFESSIONAL ENGINEER
No. 3915
5-24-00
EDWARD T. FAIN

BRIDGE ENGINEER

DETAILS OF END BENT NO. 1
ILLINOIS RIVER
WASHINGTON COUNTY

ROUTE 62 SEC. 1

ARKANSAS STATE HIGHWAY COMMISSION

LITTLE ROCK, ARK.

DRAWN BY: J.P.S.	DATE: 8-18-97	FILENAME: B040027X1.BI1			
CHECKED BY: AMS	DATE: 2-19-98	SCALE: 1:30			
DESIGNED BY: R.L.W.	DATE: 8-11-97				

BRIDGE NO. 06732 DRAWING NO. 38835

METRIC

MICROFILMED

OCT 31 2000

DATE REVISED	DATE FILMED	DATE REVISED	DATE FILMED	FED. ROAD DIST. NO.	STATE	FED. AID PROJ. NO.	SHEET NO.	TOTAL SHEETS
				6	ARK.			
				JOB NO.		040027	26	69
				1	06732	End Bent	38836	

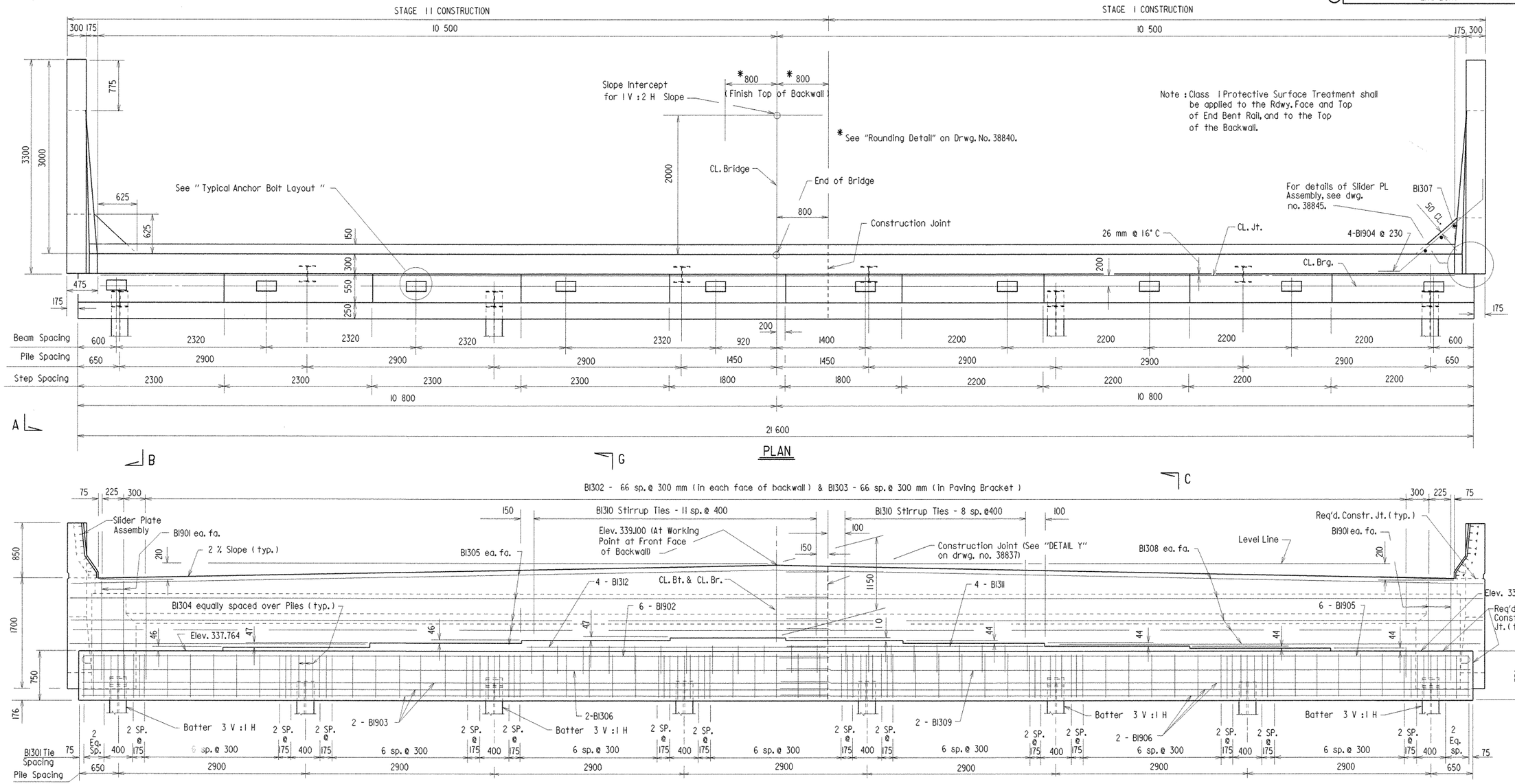

Note : For Details of Wingwalls and Reinforcing Bending Diagrams, see dwg. no. 38837.

STATE OF ARKANSAS
Edward T. Fain
REGISTERED PROFESSIONAL ENGINEER
No. 3915
8-24-00
EDWARD T. FAIN

BRIDGE ENGINEER

DETAILS OF END BENT NO. 8
ILLINOIS RIVER
WASHINGTON COUNTY

ROUTE 62 SEC. 1

ARKANSAS STATE HIGHWAY COMMISSION

LITTLE ROCK, ARK.

DRAWN BY: J.P.S. DATE: 8-12-97 FILENAME: B040027X1.B81
CHECKED BY: AMS DATE: 2-19-98 SCALE: 1:30
DESIGNED BY: R.L.W. DATE: 8-11-97

BRIDGE NO. 06732 DRAWING NO. 38836

METRIC D

MICROFILMED
OCT 31 2000

DATE REVISED	DATE FILMED	DATE REVISED	DATE FILMED	FED. ROAD DIST. NO.	STATE	FED. AID PROJ. NO.	SHEET NO.	TOTAL SHEETS
				6	ARK.			
				JOB NO.		040027	27	69
				(1)	06732	END BENT	38837	

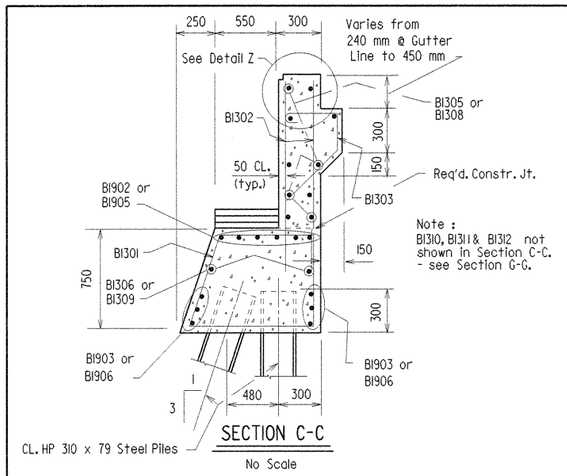

Note : BI310, BI311 & BI312 not shown in Section C-C. - see Section G-G.

SECTION C-C

No Scale

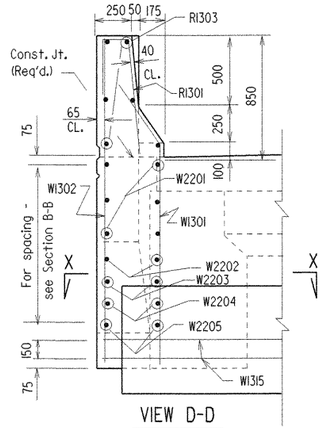

VIEW D-D

1:20

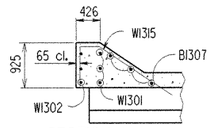

SECTION X-X

N.T.S.

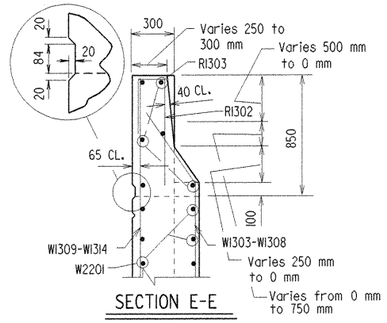

SECTION E-E

N.T.S.

BAR LIST PER END BENT

Mark	No. Req'd.	Length	Pin Dia.
BI301	83	3210	50
BI302	134	1600	str.
BI303	67	1210	50
BI304	24	2070	50
BI305	10	11 710	str.
BI306	2	11 550	str.
BI307	6	1350	str.
BI308	10	10 840	str.
BI309	2	10 680	str.
BI310	21	1500	50
BI311	4	4080	str.
BI312	4	4650	str.
BI901	8	1600	str.
BI902	6	11 770	114
BI903	6	11 550	str.
BI904	8	2250	114
BI905	6	11 260	114
BI906	6	10 730	str.
RI301	10	1200	50
RI302	8	1200	50
RI303	12	3200	str.
RI901	16	1350	str.
RI902	6	1530	str.
WI301	6	2090	76
WI302	6	2460	str.
WI303 to WI308	2 ea.	1040 to 1780	76
WI309 to WI314	2 ea.	1390 to 2140	str.
WI315	4	2450	50
W2201	12	3200	str.
W2202	4	2120	str.
W2203	4	1720	str.
W2204	4	1320	str.
W2205	4	3010	133

Bending Diagrams (Dimensions are out to out of bars.)

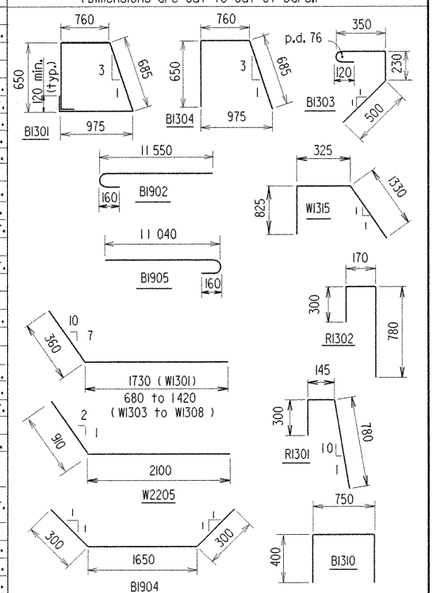

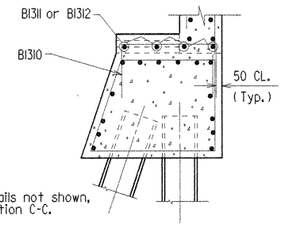

Note : For Details not shown, see Section C-C.

SECTION G-G

No Scale

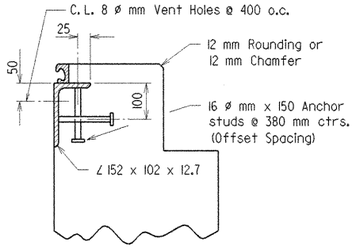

Note: For Details of Strip Seal Joint, see Dwg. No. 38845.

DETAIL Z

N.T.S.

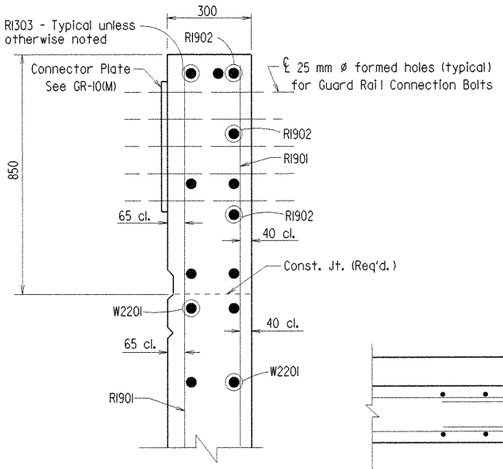

SECTION F-F

N.T.S.

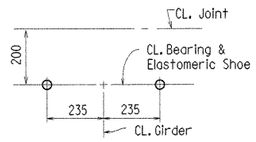

Note : For Details of Elastomeric Bearings, see Dwg. No. 38846.

TYP. ANCHOR BOLT LAYOUT

No Scale

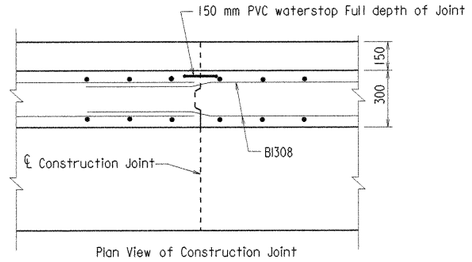

Plan View of Construction Joint

DETAIL Y

N.T.S.

Note : Place Type C Name Plate on Right Wing at beginning of Bridge only.

5 - 25 mm ø formed holes for guard rail connection. See Drwg. No. GR-10(M) for bolt spacing and additional connection details

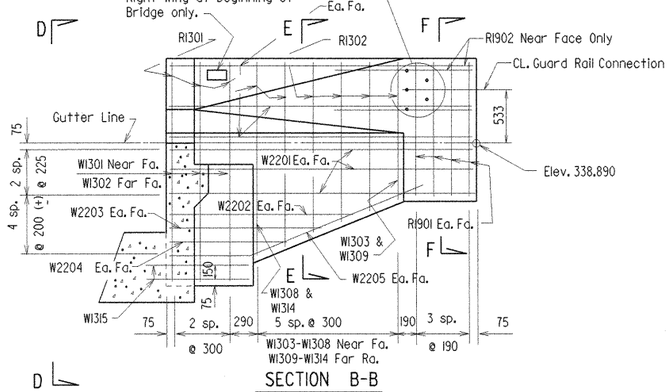

SECTION B-B

No Scale

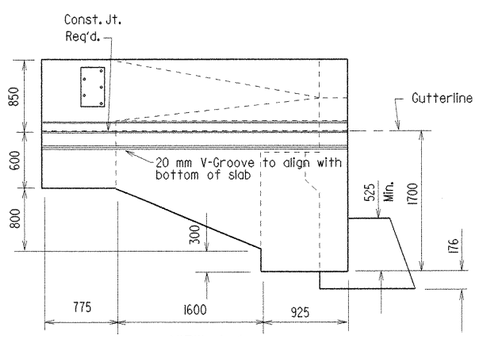

VIEW A-A

No Scale

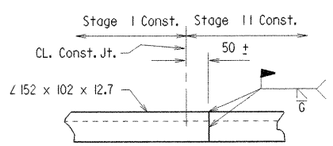

ROADWAY ANGLE AT STAGE CONST. JOINT

No Scale

END BENT NOTES

Stations and elevations are in meters. All other dimensions are in millimeters unless otherwise noted.

All concrete shall be Class "S" with a minimum 28 day compressive strength f'c = 24.0 MPa. Concrete shall be poured in the dry and all exposed corners to be chamfered 20 mm unless otherwise noted.

All reinforcing steel shall conform to ASTM A615/A615M-96a, Gr.420 (yield strength = 420 MPa)

Backwall shall not be poured before beams are in place. Structural steel in end bents shall be AASHTO M270, Gr. 345W and shall be paid for as "Structural Steel in Beam Spans" (M270, Gr. 345W).

If anchor bolts are drilled into cap, top reinforcing bars shall be properly placed to avoid damage.

For additional information see layout.

MICROFILMED
OCT 31 2000

STATE OF ARKANSAS
Edward T. Fain
REGISTERED PROFESSIONAL ENGINEER
No. 3915
8-24-00
EDWARD T. FAIN
BRIDGE ENGINEER

DETAILS COMMON TO END BENT NOS. 1 & 8
ILLINOIS RIVER
WASHINGTON COUNTY
ROUTE 62 SEC. 1

ARKANSAS STATE HIGHWAY COMMISSION
LITTLE ROCK, ARK.

DRAWN BY: J.P.S. DATE: 8-12-97
CHECKED BY: AMS DATE: 2-17-98
DESIGNED BY: R.L.W. DATE: 8-11-97
FILENAME: B040027XI.B82
SCALE: as Noted
BRIDGE NO. 06732 DRAWING NO. 38837
AHTD METRIC

DATE REVISED	DATE FILMED	DATE REVISED	DATE FILMED	FED. ROAD DIST. NO.	STATE	FED. AID PROJ. NO.	SHEET NO.	TOTAL SHEETS
				6	ARK.			
				JOB NO.		040027	28	60
				(1) 06732		INT. BENT	38838	

TABLE OF VARIBLES

Bt. No.	"A"	"B"	"C"	"D"	"E"	"F"	"G"	"H"	"J"	"K"	"L"	"M"
2	7300	5480	5521	5635	5643	5521	5478	17	44	6400	6520	330.470
3	7200	5380	5421	5535	5543	5421	5378	17	44	6300	6420	330.567
6	7700	5880	5921	6035	6043	5921	5878	19	48	6800	6920	330.067
7	7400	5580	5621	5735	5743	5621	5578	18	46	6500	6620	330.370

BAR LIST-PER BENT

MARK	NO. REQ'D. STAGE II	NO. REQ'D. STAGE I	LENGTH	'A'	'B'	P.D.
B1301	37	34	3310	650	950	50
B1302	16	16	2850	420	950	50
B1303	8		10 180			Str.
B1304	6	6	2500	650	950	50
B1305		8	9700			Str.
B2501	12		10 180			Str.
B2502	3		5250			Str.
B2503		12	9700			Str.
B2504		3	4950			Str.
C1301	* "J"	* "J"	2650	620	620	76
C2501	12	12	* "K"			Str.
C2502	12	12	* "L"			Str.
C2503	24	24	2400	2050	410	152
F1901	52	52	1950			Str.

* See Table of Variables

BENDING DIAGRAMS

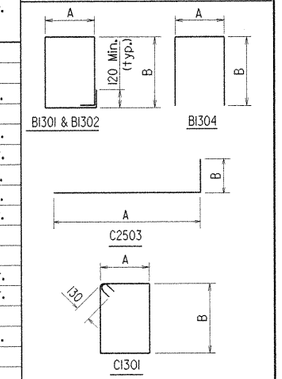

Dimensions are out to out of bars.

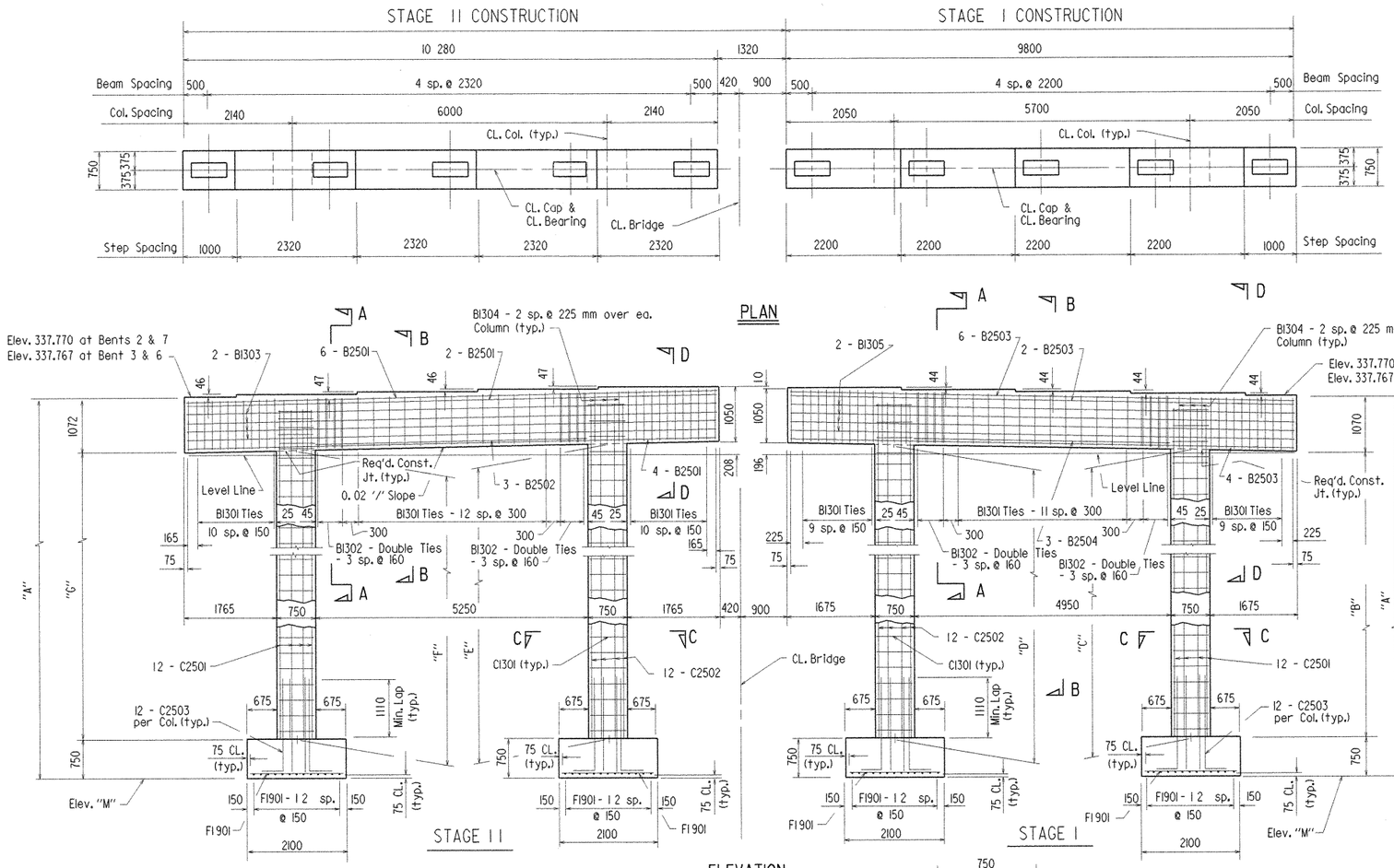

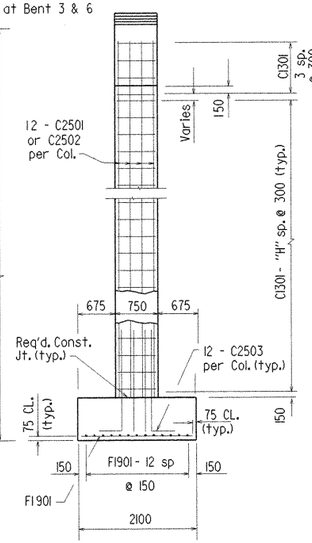

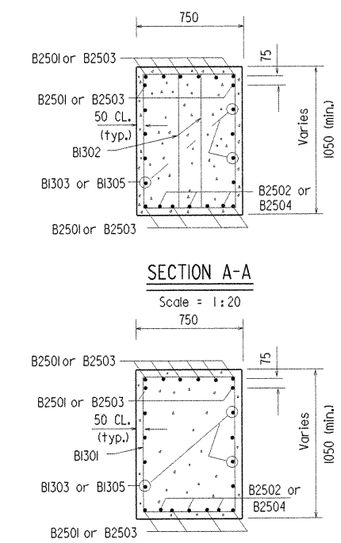

GENERAL NOTES

Stations and elevations are in meters. All other dimensions are in millimeters unless otherwise noted.

All Concrete shall be Class "S" and shall be poured in the dry. All exposed corners to be chamfered 20 mm unless otherwise noted.

All Reinforcing Steel shall conform to ASTM A 615/A 615M-96a, Grade 420 (fy = 420 MPa.)

If Anchor Bolts are drilled into cap, top reinforcing bars shall be properly placed to avoid damage.

For additional information, see Layout.

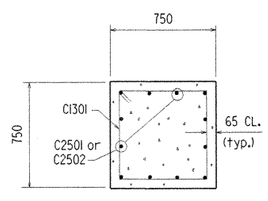

SECTION C-C

Scale = 1:20

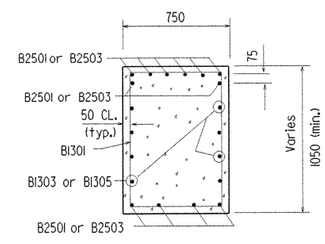

SECTION D-D

Scale = 1:20

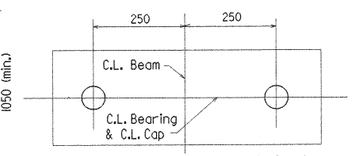

Note : For Details of Elastomeric Bearings, see Dwg. No. 38847.

TYPICAL ANCHOR BOLT LAYOUT

Not to Scale

STATE OF ARKANSAS
Edward T. Fain
REGISTERED PROFESSIONAL ENGINEER
No. 3915
8-24-00
EDWARD T. FAIN

BRIDGE ENGINEER

DETAILS OF INT. BENT NOS. 2, 3, 6 & 7
ILLINOIS RIVER
WASHINGTON COUNTY
ROUTE 62 SEC. 1
ARKANSAS STATE HIGHWAY COMMISSION
LITTLE ROCK, ARK.

DRAWN BY: J.P.S. DATE: 9-17-97 FILENAME: B040027X1. B21
CHECKED BY: AMS DATE: 2-17-98 SCALE: 1:50 or as Noted
DESIGNED BY: R.L.W. DATE: 8-29-97
BRIDGE NO. 06732 DRAWING NO. 38838

A H METRIC D

MICROFILMED
OCT 31 2000

DATE REVISED	DATE FILMED	DATE REVISED	DATE FILMED	FED. ROAD DIST. NO.	STATE	FED. AID PROJ. NO.	SHEET NO.	TOTAL SHEETS
				6	ARK.			
				JOB NO.		040027	29	69
				(1) 06732		INT. BENT	38839	

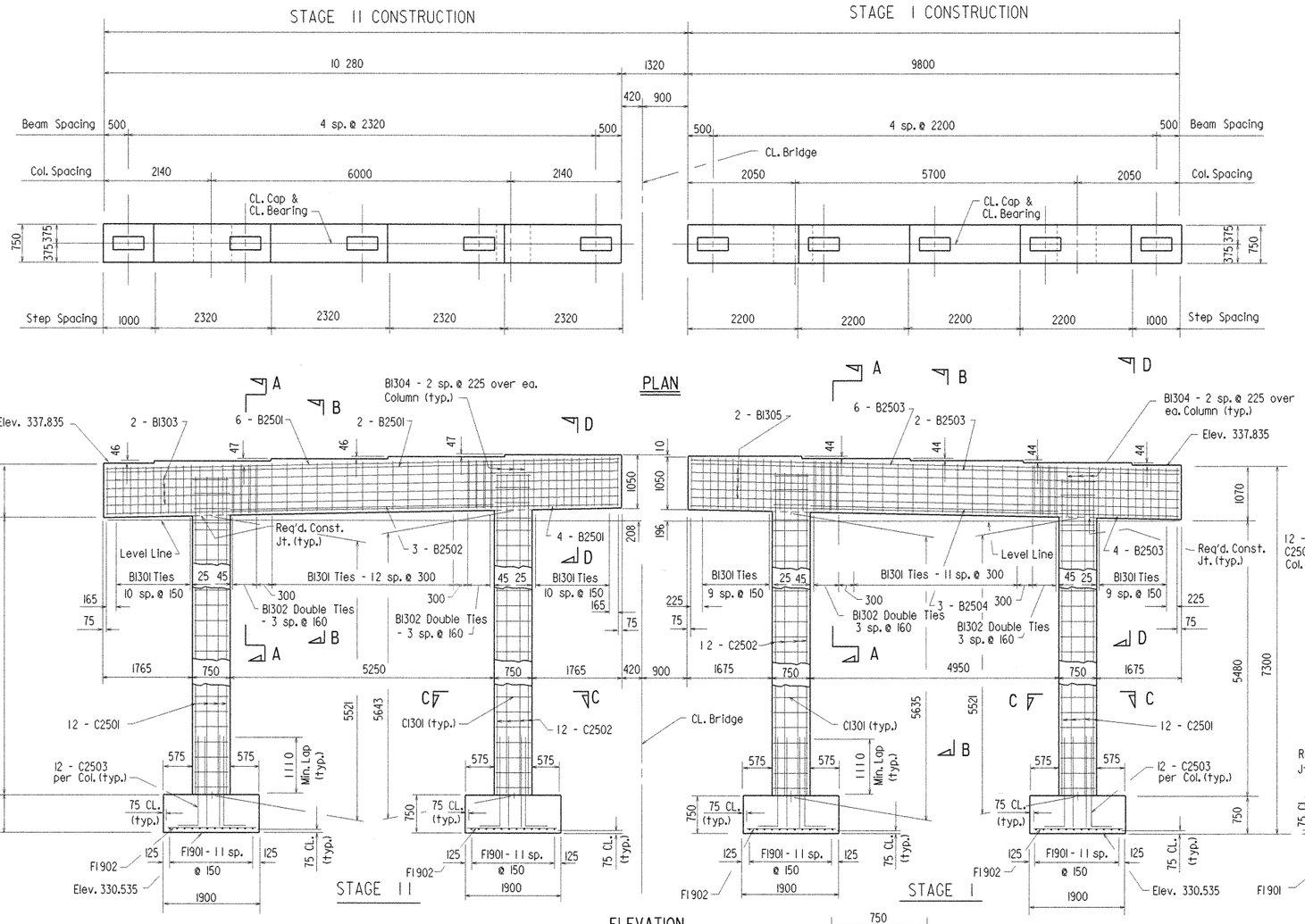

BAR LIST-PER BENT

MARK	NO. REQ'D. STAGE II	NO. REQ'D. STAGE I	LENGTH	'A'	'B'	P.D.
BI301	37	34	3310	650	950	50
BI302	16	16	2850	420	950	50
BI303	8		10 180			Str.
BI304	6	6	2500	650	950	50
BI305		8	9700			Str.
B2501	12		10 180			Str.
B2502	3		5250			Str.
B2503		12	9700			Str.
B2504		3	4950			Str.
C130I	44	44	2650	620	620	76
C2501	12	12	6400			Str.
C2502	12	12	6520			Str.
C2503	24	24	2400	2050	410	152
F1901	24	24	2650			Str.
F1902	36	36	1750			Str.

BENDING DIAGRAMS

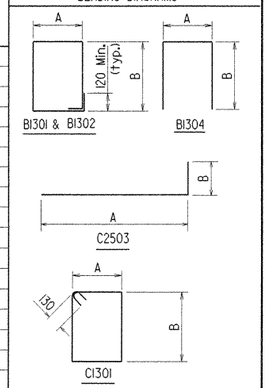

Dimensions are out to out of bars.

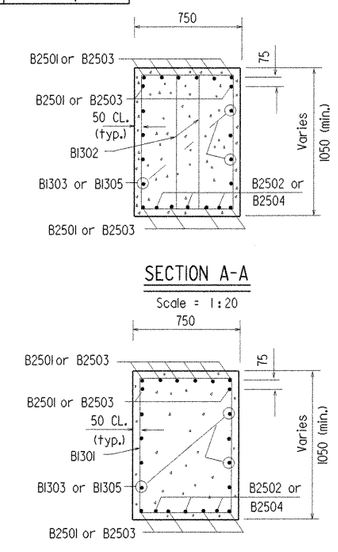

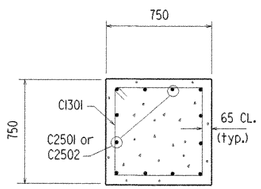

SECTION C-C

Scale = 1:20

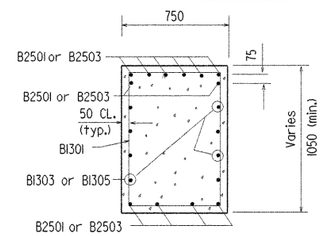

SECTION D-D

Scale = 1:20

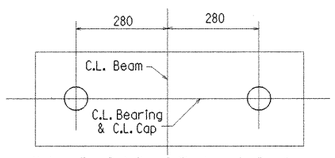

Note : For Details of Elastomeric Bearings, see Dwg. No. 38847.

TYPICAL ANCHOR BOLT LAYOUT

Not to Scale

GENERAL NOTES

Stations and elevations are in meters. All other dimensions are in millimeters unless otherwise noted.

All Concrete shall be Class "S" and shall be poured in the dry. All exposed corners to be chamfered 20 mm unless otherwise noted.

All Reinforcing Steel shall conform to ASTM A 615/A 615M-96a, Grade 420 (fy = 420 MPa.)

If Anchor Bolts are drilled into cap, top reinforcing bars shall be properly placed to avoid damage.

For additional information, see Layout.

MICROFILMED

OCT 31 2000

STATE OF ARKANSAS
Edward T. Fain
REGISTERED PROFESSIONAL ENGINEER
No. 3915
8-24-00
EDWARD T. FAIN

BRIDGE ENGINEER

DETAILS OF INT. BENT NOS. 4 & 5 ILLINOIS RIVER WASHINGTON COUNTY

ROUTE 62 SEC. 1

ARKANSAS STATE HIGHWAY COMMISSION

LITTLE ROCK, ARK.

DRAWN BY: J.P.S.	DATE: 9-5-97	FILENAME: B040027XI. B41			
CHECKED BY: AMS	DATE: 2-18-98	SCALE: 1:50 or as Noted			
DESIGNED BY: R.L.W.	DATE: 8-29-97				
BRIDGE NO. 06732	DRAWING NO. 38839				

AHTD METRIC

DATE REVISED	DATE FILMED	DATE REVISED	DATE FILMED	FED. ROAD DIST. NO.	STATE	FED. AID PROJ. NO.	SHEET NO.	TOTAL SHEETS
				6	ARK.			
				JOB NO.		040027	30	69
				① 06732		SPAN DETAILS	38840	

Note: One #16 bar in the top and one #16 bar in the bottom may be substituted for each bar S1601E or S1603E. Payment will be based on the weight of bar S1601E or S1603E. Bars in top and bottom mat shall be Epoxy coated.

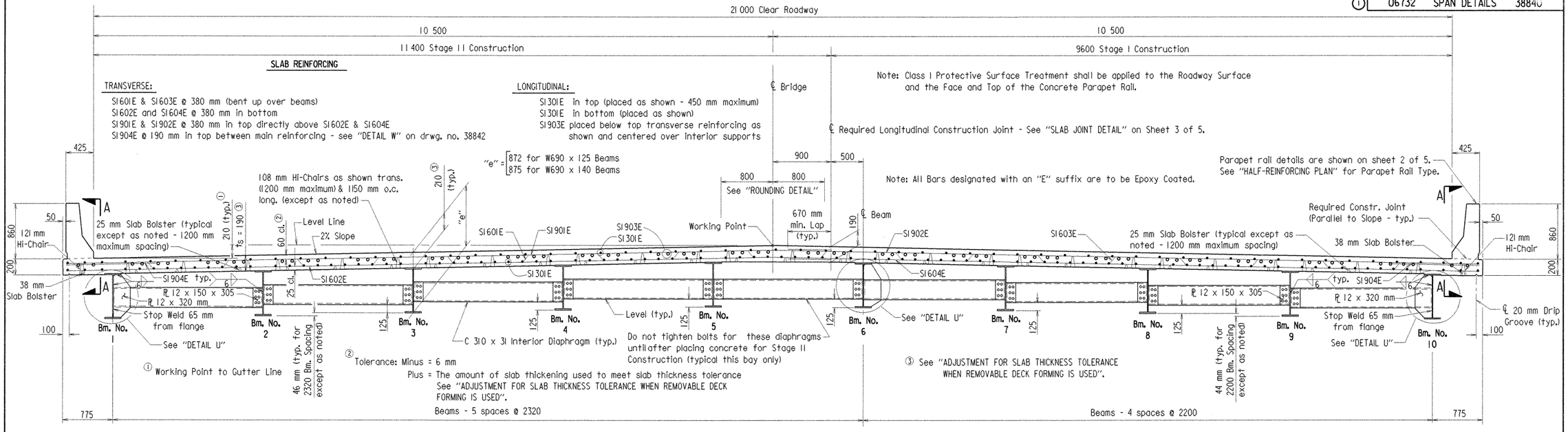

TYPICAL ROADWAY SECTION

1:30

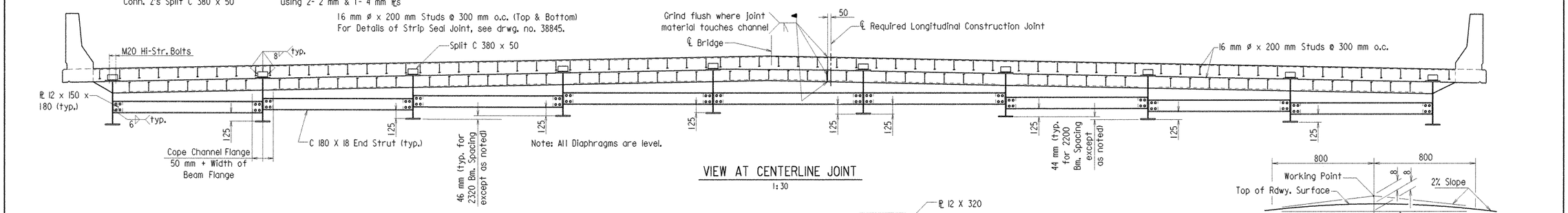

VIEW AT CENTERLINE JOINT

1:30

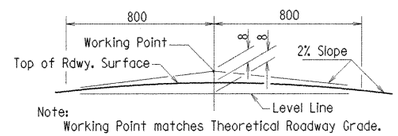

ROUNDING DETAIL

N.T.S.

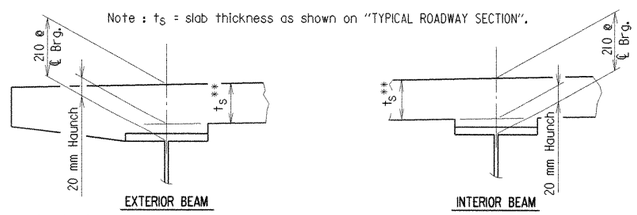

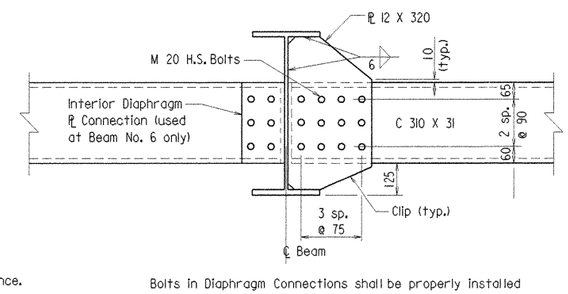

Bolts in Diaphragm Connections shall be properly installed and tightened in accordance with subsection 807.71.

DETAIL U

N.T.S.

** Tolerance when removable deck forming is used is +12 mm, -6 mm. Haunch forming is required and shall be adjusted to maintain slab thickness tolerance.

Haunch dimension may vary within the following limits to maintain the grade and slab thickness tolerance : Minimum - occurs when top flange contacts bottom reinforcing steel; Maximum - top flange thickness plus 45 mm. No increase in concrete and structural steel quantities will be made to maintain tolerances.

Tolerances shown are applicable only when removable deck forming is used. See Std. Dwg. No. 36515 for tolerances when permanent steel deck forms are used. Payment for concrete shall be based on removable deck forming.

ADJUSTMENT FOR SLAB THICKNESS TOLERANCE WHEN REMOVABLE DECK FORMING IS USED

N.T.S.

MICROFILMED
OCT 31 2000

STATE OF ARKANSAS
Edward T. Fain
REGISTERED PROFESSIONAL ENGINEER
No. 3915
8-24-00
EDWARD T. FAIN

BRIDGE ENGINEER

SHEET 1 OF 5

DETAILS OF
116.5 METER CONTINUOUS
W-BEAM UNIT
ILLINOIS RIVER

ROUTE 62 SEC. 1

ARKANSAS STATE HIGHWAY COMMISSION
LITTLE ROCK, ARK.

DRAWN BY:	TEB	DATE:	09/15/97	FILENAME:	BR040027.S11
CHECKED BY:	AMS	DATE:	12-3-97	SCALE:	As Noted
DESIGNED BY:	R.L.W.	DATE:	7-24-97		

BRIDGE NO. 06732 DRAWING NO. 38840

METRIC

DATE REVISED	DATE FILMED	DATE REVISED	DATE FILMED	FED. ROAD DIST. NO.	STATE	FED. AID PROJ. NO.	SHEET NO.	TOTAL SHEETS
				6	ARK.			
				JOB NO.		040027	31	69
				1	06732	SPAN DETAILS	38841	

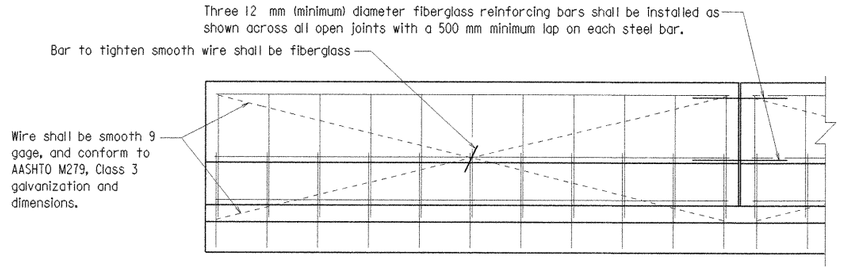

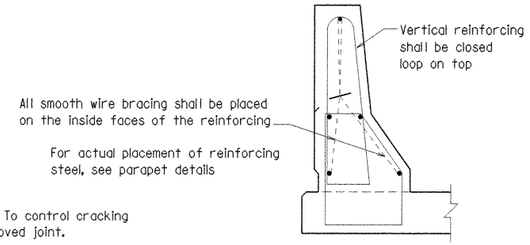

All panels shall be braced as shown to prevent racking. All open joints shall be sawed as soon as practical to a minimum width of 6 mm. To control cracking before sawing all joints must be grooved before the concrete is set. Sawing of the joints must be controlled so it will follow the grooved joint.

The extruded parapet shall conform to the horizontal and vertical lines shown on the plans or as directed by the Engineer and shall present a smooth, uniform appearance and texture. Exposed surfaces may be given a light brush finish or a Class 3, Textured Coating Finish, in place of Class 2, Rubbed Finish.

DETAILS OF OPTIONAL SLIPFORMING OF CONCRETE PARAPET RAIL

N.T.S.

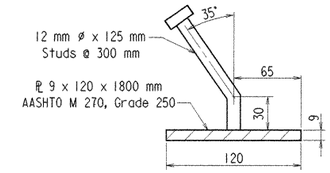

DETAIL Z

N.T.S.

Note:
The Surfaces of the 9 mm Plates which will not be in contact with concrete shall be painted in accordance with Section 638, or as approved by the Engineer. Only one coat is required and shall be applied in the fabricator's shop. Painting will not be paid for directly, but will be considered subsidiary to Structural Steel or Class S (AE) Concrete-Bridge.

BAR LIST - PER UNIT

MARK	NUMBER REQUIRED	LENGTH	PIN. DIA.
P1301E	828	1930	50
P1302E	828	1680	50
P1303E	252	950	50
P1304E	252	1780	50
P1305E	168	3400	Str.
P1306E	48	1900	Str.
P1307E	120	3400	Str.
P1901E	168	3400	Str.
S1301E	1560	12 100	Str.
S1601E	306	12 110	76
S1602E	307	11 830	Str.
S1603E	306	10 980	76
S1604E	307	10 700	Str.
S1901E	307	11 830	Str.
S1902E	307	10 700	Str.
S1903E	456	8600	Str.
S1904E	1224	1500	Str.

Note:
All Bars designated with an "E" suffix are to be Epoxy Coated.

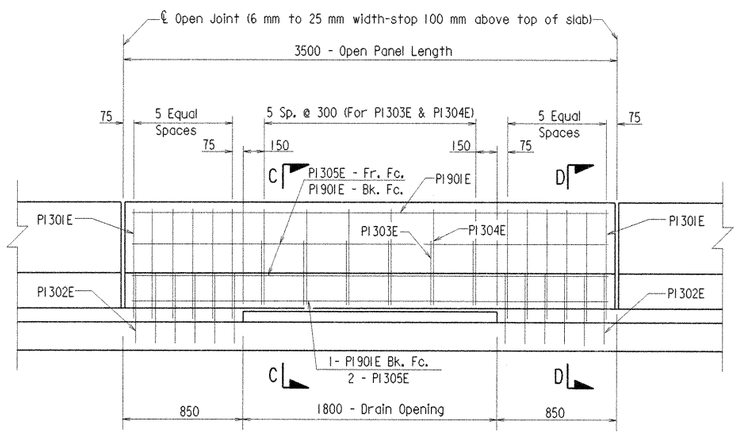

SECTION A-A (TYPICAL 3500 mm OPEN PANEL)

1:20

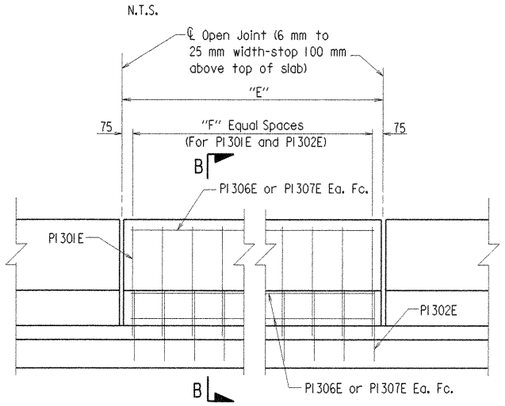

SECTION A-A (TYPICAL CLOSED PANEL)

1:20

TABLE OF CLOSED PARAPET VARIABLES

PANEL LENGTH "E"	"F"	LONGITUDINAL REINFORCING
2000	7	P1306E
3500	12	P1307E

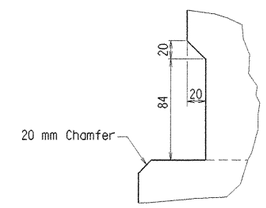

DETAIL X

N.T.S.

BENDING DIAGRAMS

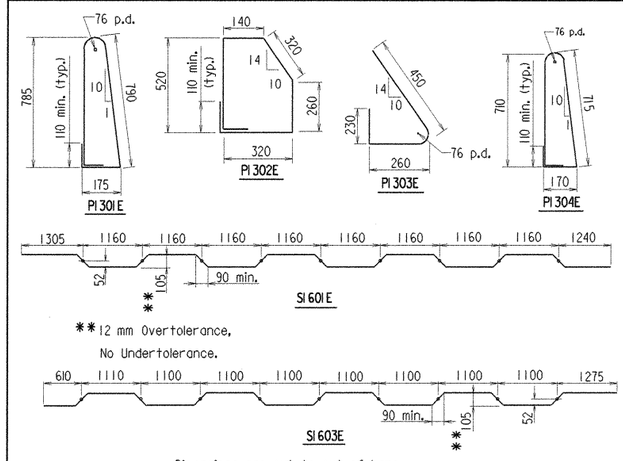

Dimensions are out to out of bars.

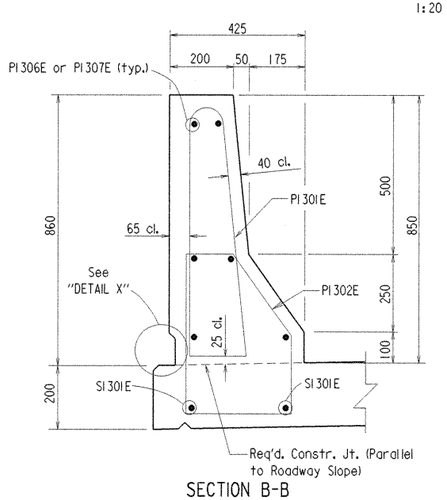

SECTION B-B

N.T.S.

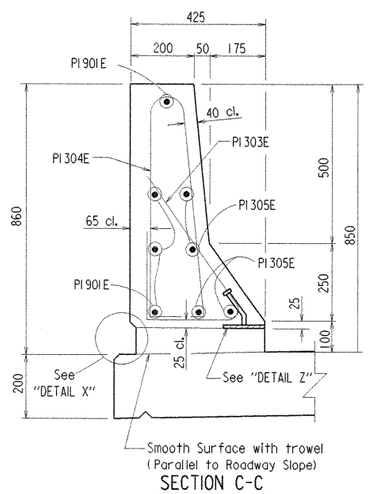

SECTION C-C

N.T.S.

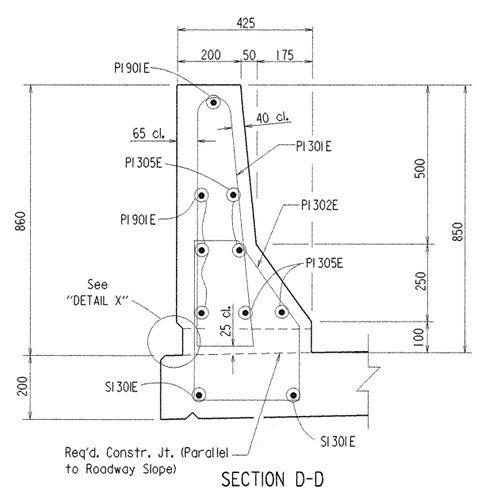

SECTION D-D

N.T.S.

MICROFILMED
OCT 31 2000

STATE OF ARKANSAS
Edward T. Fain
REGISTERED PROFESSIONAL ENGINEER
No. 5915
8-31-99
EDWARD T. FAIN

BRIDGE ENGINEER

SHEET 2 OF 5

DETAILS OF
116.5 METER CONTINUOUS
W-BEAM UNIT
ILLINOIS RIVER

ROUTE 62 SEC. 1

ARKANSAS STATE HIGHWAY COMMISSION

LITTLE ROCK, ARK.

DRAWN BY: TEB DATE: 09/15/97 FILENAME: BR040027.S12
CHECKED BY: ARS DATE: 12-3-97 SCALE: As Noted
DESIGNED BY: R.L.W. DATE: 7-24-97
BRIDGE NO. 06732 DRAWING NO. 38841

METRIC

DATE REVISED	DATE FILMED	DATE REVISED	DATE FILMED	FED. ROAD DIST. NO.	STATE	FED. AID PROJ. NO.	SHEET NO.	TOTAL SHEETS
				6	ARK.			
				JOB NO.		040027	32	69
				(1) 06732		SPAN DETAILS	38842	

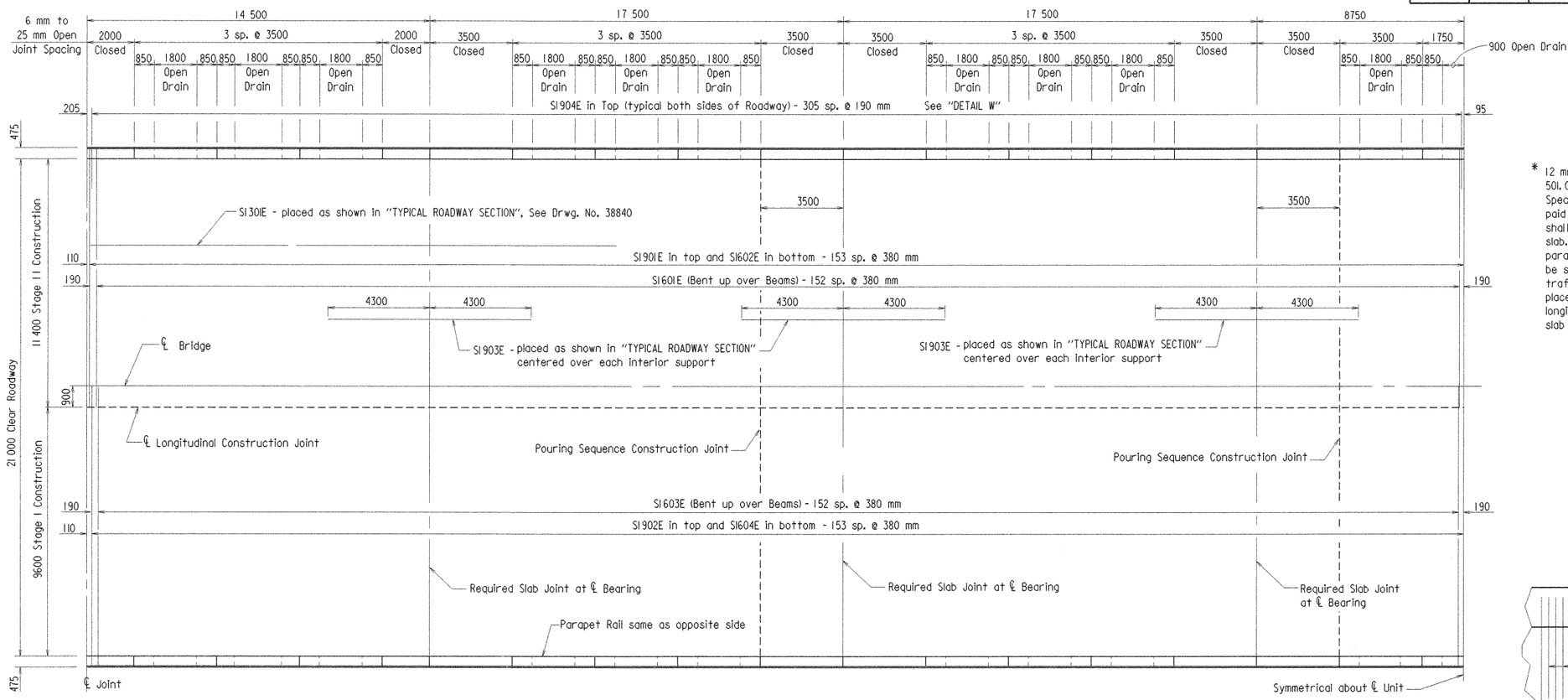

HALF - REINFORCING PLAN
1:100

* 12 mm x 25 mm Type 6 Joint Sealer. See Sections 501.02 (h) and 501.05 (j) of the Standard Specifications. Joint Sealer shall be measured and paid for as Class S(AE) Concrete-Bridge. Slab joints shall extend to the outside edge of the deck slab. Slab joints shall be installed before the parapet railing is poured. If slab joints are to be sawed, they shall be sawed before any vehicular traffic is allowed on the unit. Slab joints shall be placed at all pouring sequence construction joints, longitudinal construction joints, and required slab joint locations.

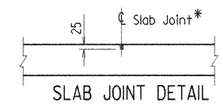

SLAB JOINT DETAIL
N.T.S.

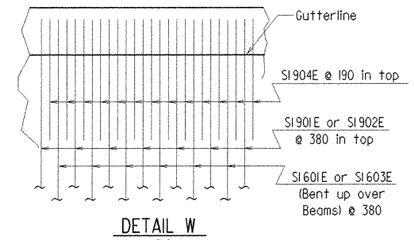

DETAIL W
N.T.S.

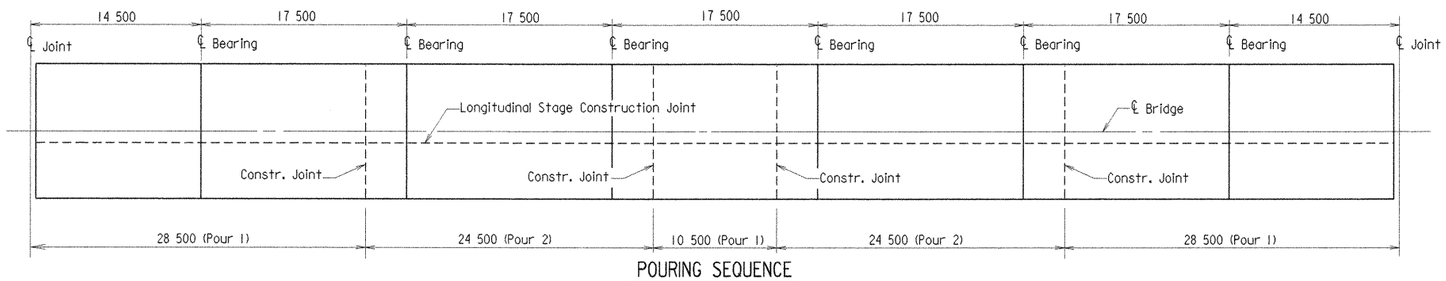

POURING SEQUENCE
N.T.S.

Notes:

Pours with the same number may be placed simultaneously or separately. All Pours I must be placed before Pours 2 can be placed. 48 hours shall elapse between the end of a pour and the start of the next pour. 72 hours shall elapse between the end of a pour and the start of an adjacent pour. Any railing pours made before the entire slab unit has been placed must be approved by the Bridge Engineer.

Concrete in bridge superstructure shall be consolidated for the entire pour before any concrete has taken its initial set. This may require the use of a retarding agent.

The contractor must obtain approval from the Bridge Engineer for any deviations from the pouring sequence shown.

MICROFILMED
OCT 31 2000

STATE OF ARKANSAS
Edward T. Falk
REGISTERED PROFESSIONAL ENGINEER
No. 3915
6-24-00
EDWARD T. FALK

BRIDGE ENGINEER

SHEET 3 OF 5

DETAILS OF
116.5 METER CONTINUOUS
W-BEAM UNIT
ILLINOIS RIVER

ROUTE 62 SEC. I
ARKANSAS STATE HIGHWAY COMMISSION
LITTLE ROCK, ARK.

DRAWN BY: TEB DATE: 09/15/97 FILENAME: BR040027.SI3
CHECKED BY: AMS DATE: 12-3-97 SCALE: As Noted
DESIGNED BY: R.L.W. DATE: 7-24-97
BRIDGE NO. 06732 DRAWING NO. 38842

AHD METRIC

DATE REVISED	DATE FILMED	DATE REVISED	DATE FILMED	FED. ROAD DIST. NO.	STATE	FED. AID PROJ. NO.	SHEET NO.	TOTAL SHEETS
				6	ARK.			
				JOB NO.		040027	33	69
				1	06732	SPAN DETAILS	38843	

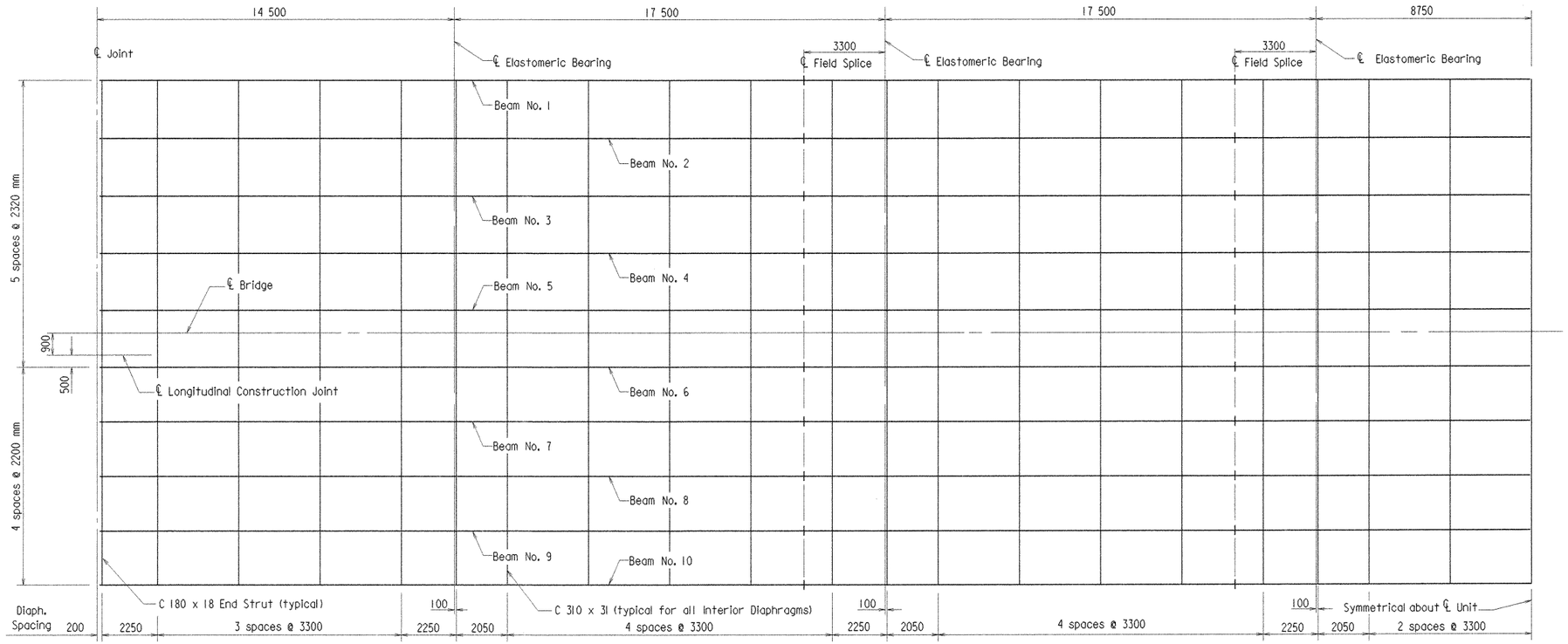

HALF - FRAMING PLAN

1:100

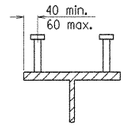

Stud Shear Connectors shown shall be 22 mm ø x 100 mm long, granular flux filled, solid fluxed or equal, and automatically end welded to the beam flange in accordance with the recommendations of the Manufacturer. 20 mm ø studs may be used in place of the 22 mm ø studs shown, at the ratio of 1.361- 20 mm ø studs in place of one 22 mm ø stud. 22 mm ø studs will be used as basis for measurement of structural steel in shear connectors. Maximum stud spacing = 600 mm.

SHEAR CONNECTOR DETAIL

N.T.S.

TABLE FOR WELD

Material Thickness of Thicker Part Joined	Minimum Size of Fillet Weld	Single Pass Weld Must Be Used
To 20 mm Inclusive	6 mm	
Over 20 mm	8 mm	

Note:
When a fillet weld size, as shown on the Plans, is larger than the minimum, the First Pass shall be that specified for minimum size of fillet weld.

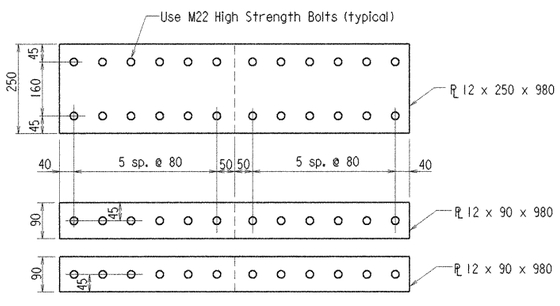

FLANGE SPLICE PLATES

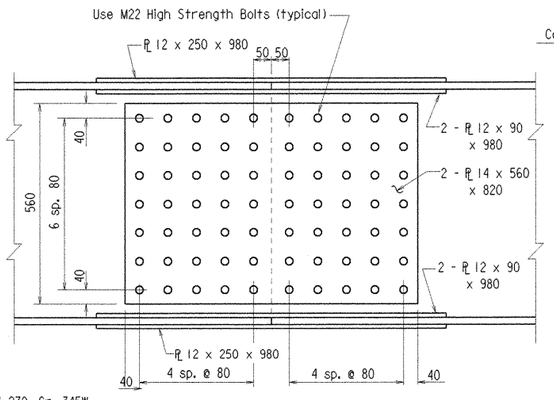

WEB SPLICE PLATES

Note:
All Splice Plates to be AASHTO M 270, Gr. 345W.

TYPICAL FIELD SPLICE

N.T.S.

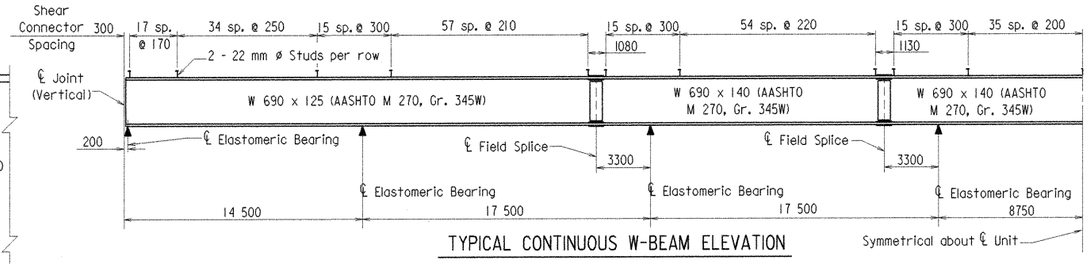

TYPICAL CONTINUOUS W-BEAM ELEVATION

N.T.S.

MICROFILMED
OCT 31 2000

STATE OF ARKANSAS
Edward T. Fain
REGISTERED PROFESSIONAL ENGINEER
No. 3915
8-24-00
EDWARD T. FAIN

BRIDGE ENGINEER

SHEET 4 OF 5

DETAILS OF
116.5 METER CONTINUOUS
W-BEAM UNIT
ILLINOIS RIVER

ROUTE 62 SEC. 1
ARKANSAS STATE HIGHWAY COMMISSION
LITTLE ROCK, ARK.

DRAWN BY: TEB DATE: 09/15/97 FILENAME: BR040027.S14
CHECKED BY: AMS DATE: 12-3-97 SCALE: As Noted
DESIGNED BY: R.L.W. DATE: 7-24-97

BRIDGE NO. 06732 DRAWING NO. 38843

A H D METRIC

DATE REVISED	DATE FILMED	DATE REVISED	DATE FILMED	FED. ROAD DIST. NO.	STATE	FED. AID PROJ. NO.	SHEET NO.	TOTAL SHEETS
				6	ARK.			
				JOB NO.		040027	34	69
				(1)	06732	SPAN DETAILS	38844	

GENERAL NOTES

All dimensions are in millimeters (mm) unless otherwise noted.

CONCRETE:

The superstructure details shown are for when removable deck forming is used and are the basis for measurement of Class S(AE) Concrete. See Standard Drawing No. 36515 for allowable modifications and for tolerance when permanent steel bridge deck forms are used.

All concrete shall be Class S(AE) with a minimum 28 day compressive strength of 28.0 MPa and shall be poured in the dry. All exposed corners shall be chamfered 20 mm unless otherwise noted. Concrete shall be placed and consolidated for the entire pour before any concrete has taken its initial set. This may require the use of a retarding agent. Sufficient concrete must be placed ahead of the strike-off to fully load the beams. If a longitudinal strike-off is used, a vertical camber adjustment must be made in the strike-off to account for the future dead load deflection caused by the railing. Movement of the finishing machine across the new concrete shall be on planks placed on the surface and is prohibited for 72 hours after finishing the pour. A minimum of 72 hours shall elapse between completion of the slab and the pouring of the parapet railing. The bridge deck shall be given a tine finish as specified for final finishing in subsection 802.19 for a Class 5 Tined Bridge Roadway Surface Finish.

REINFORCING STEEL:

The reinforcing steel shall be accurately located in the forms and firmly held in place by steel wire supports sufficient in size and number to prevent displacement during the course of construction. The wire supports will not be paid for directly but will be considered subsidiary to the item "REINFORCING STEEL-BRIDGE".

STRUCTURAL STEEL:

All structural steel shall be AASHTO M 270, Grade 345W unless otherwise noted and shall be paid for at the unit price per kilogram bid for "Structural Steel in Beam Spans (M 270, Gr. 345W)". Grade 345W steel shall not be painted. All exposed surfaces to be cleaned in accordance with subsection 807.84(e). Structural steel completely embedded in concrete may be AASHTO M 270, Gr. 250.

Beams are considered main load carrying members and shall meet the Longitudinal Charpy V-Notch Test specified in Subsection 807.05.

All Beams shall be blocked in their true position in the shop and with the webs horizontal. See Section 807.54 (b)(1). The camber, length of sections, distance between bearings, and openings of joints shall be measured with the Beams in their true position and this information shall become a part of the permanent records of this job. The component parts shall be match marked in this assembly and these marks shall be shown on the erection diaphragm. All Beam dimensions are based on a temperature 16°C. A tolerance of ± 6 mm is allowed for camber.

Flange field splice plates shall be cut and fabricated so that the primary direction of rolling is parallel to the main tensile and/or compressive stress.

Steel Diaphragms and End Struts shall be installed as beams are erected and shall be completely bolted prior to pouring of the concrete deck unless otherwise noted.

Field connections shall be bolted with high strength bolts and shall be M20 bolts unless otherwise noted. Bolts shall be placed with heads on the outside face of the exterior beam webs and on bottom of beam flanges.
Holes for M20 high strength bolts in expansion device, diaphragms, and end struts may be 24 mm ø if a washer is supplied for use under both the nut and the head of the bolt.

All welding that is to be done during fabrication of structural steel, including temporary welds shall be detailed on the shop drawings and submitted for approval. If the contractor or erector should want to make additional welds, whether temporary or permanent, he shall submit detailed drawings with a formal request to the Bridge Engineer for approval. All welding shall conform to subsection 807.26.

Bearings shall be seated in accordance with subsection 808.08. This work and material are to be considered as subsidiary to the item "ELASTOMERIC BEARINGS" and will not be paid for directly.

Structural shapes of equal or greater strength may be substituted for shapes shown if approval is obtained from the Bridge Engineer. Payment will be made on the basis of shapes shown.

Drawings show general features of design only. Shop drawings shall be made in accordance with the specifications, submitted, and approval secured before fabrication is begun.

Construction Specifications: Arkansas State Highway and Transportation Department Standard Specifications for Highway Construction (1996 Edition) with applicable supplemental specifications and special provisions.

Design Specifications: AASHTO 1996 with current interim specifications.

Materials and Strengths:

Class S(AE) concrete (N = 8)	f'c = 28.0 MPa
Reinforcing Steel (ASTM A615/A615M - 96a)	fy = 420 MPa
Structural Steel AASHTO M 270 (Gr. 250)	Fy = 250 MPa
Structural Steel AASHTO M 270 (Gr. 345W)	Fy = 345 MPa

Live Loading: MS18

Method of Design : Load Factor

Dead Load:

	Beam Number					
	1	2 thru 4	5	6	7 thru 9	10
Dead Load to W- Beam	8.85 kN/m + 1.3 (Wt./m of W-Bm)	10.39 kN/m + 1.3 (Wt./m of W-Bm)	10.56 kN/m + 1.3 (Wt./m of W-Bm)	10.19 kN/m + 1.3 (Wt./m of W-Bm)	9.85 kN/m + 1.3 (Wt./m of W-Bm)	8.58 kN/m + 1.3 (Wt./m of W-Bm)

	Beam Number				
	1	2 thru 5	6	7 thru 9	10
Dead Load to Composite Beam with Future Wrg. Surface	4.5 kN/m	3.37 kN/m	3.30 kN/m	3.23 kN/m	4.43 kN/m
Future Wrg. Surface Dead Load only	1.68 kN/m	2.67 kN/m	2.60 kN/m	2.53 kN/m	1.61 kN/m

Live Load:

	Beam Number				
	1	2 thru 5	6	7 thru 9	10
Live Load to Each Composite Beam	1.2895 Wheels + Impact	1.3839 Wheels + Impact	1.3481 Wheels + Impact	1.3123 Wheels + Impact	1.2435 Wheels + Impact

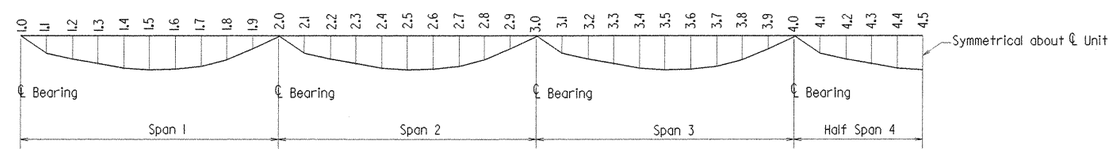

DEAD LOAD DEFLECTION DIAGRAM

N.T.S.

Note:
Camber for Dead Load Deflection ± 6 mm tolerance. Deflections shown are from a chord from Centerline Bearing to Centerline Bearing.

DEAD LOAD DEFLECTIONS (mm)

Beam Nos.	Span Point	1.0	1.1	1.2	1.3	1.4	1.5	1.6	1.7	1.8	1.9	2.0	2.1	2.2	2.3	2.4	2.5	2.6	2.7	2.8	2.9	3.0	3.1	3.2	3.3	3.4	3.5	3.6	3.7	3.8	3.9	4.0	4.1	4.2	4.3	4.4	4.5
All	Beam & Diaphragm	0	1	1	1	1	1	1	1	0	0	0	0	1	1	1	1	1	1	1	0	0	0	1	1	1	1	1	1	1	0	0	0	1	1	1	1
	Beam, Diaphragm, & Slab	0	4	8	10	11	11	9	7	4	1	0	1	5	8	11	12	11	8	5	2	0	1	4	7	9	10	10	7	4	1	0	1	4	8	10	11
	Beam, Diaphragm, Slab & Parapet	0	4	8	10	12	11	9	7	4	1	0	2	5	9	11	12	11	8	5	2	0	1	4	7	10	11	10	8	4	1	0	1	5	8	10	11

MICROFILMED
OCT 31 2000

STATE OF ARKANSAS
Edward T. Fain
REGISTERED PROFESSIONAL ENGINEER
No. 3915
3-24-00
EDWARD T. FAIN

BRIDGE ENGINEER

SHEET 5 OF 5
DETAILS OF
116.5 METER CONTINUOUS
W-BEAM UNIT
ILLINOIS RIVER

ROUTE 62 SEC. 1
ARKANSAS STATE HIGHWAY COMMISSION
LITTLE ROCK, ARK.

DRAWN BY: TEB DATE: 09/15/97 FILENAME: BR040027.S16
CHECKED BY: AMS DATE: 12-3-97 SCALE: As Noted
DESIGNED BY: R.L.W. DATE: 7-24-97
BRIDGE NO. 06732 DRAWING NO. 38844

A H M D METRIC

DATE REVISED	DATE FILMED	DATE REVISED	DATE FILMED	FED. ROAD DIST. NO.	STATE	FED. AID PROJ. NO.	SHEET NO.	TOTAL SHEETS
				6	ARK.			
				JOB NO.		040027	35	69
				1	06732	JOINT DETAILS	38845	

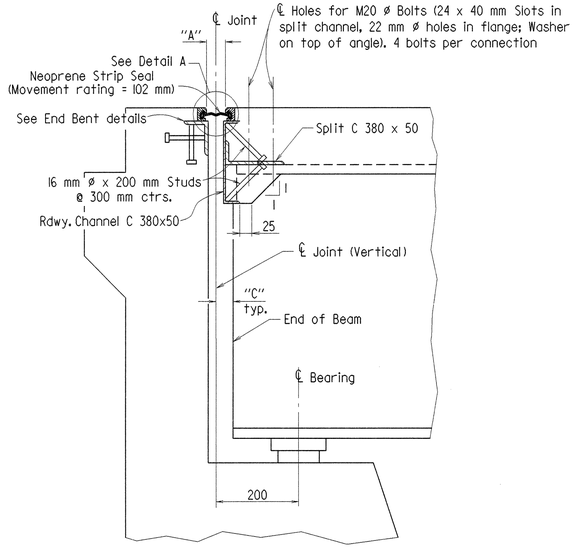

SECTION THRU JOINT AT END BENTS

Note: Sections thru Joints are taken normal to C.L. Joint.

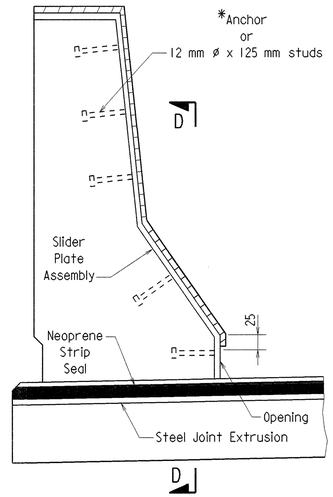

SECTION B-B

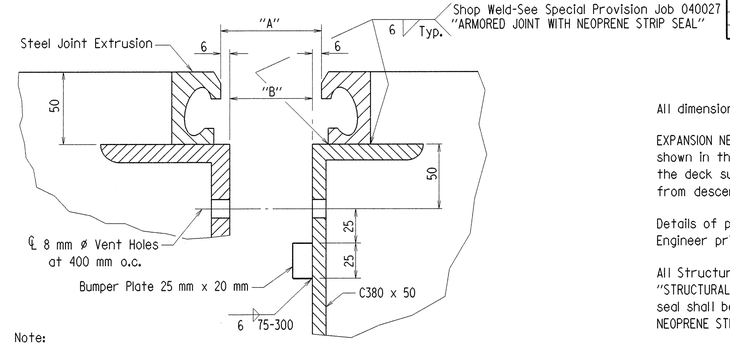

Note:
Bevel Ends of Steel Joint Extrusion for field welding at Longitudinal Stage Construction Joint.

DETAIL A

GENERAL NOTES

All dimensions are in millimeters (mm) unless otherwise noted.

EXPANSION NEOPRENE STRIP SEAL: The expansion device shall provide a movement of 102 mm as shown in the "STRIP SEAL JOINT DATA" table. The expansion joint shall be capable of sealing the deck surface and parapet area to prevent moisture and other contaminants from from descending through the joint.

Details of proposed slider plate assembly shall be submitted to and approved by the Bridge Engineer prior to the fabrication of any structural steel at the expansion device.

All Structural Steel, except for the steel extrusion for the strip seal, shall be paid for as "STRUCTURAL STEEL IN BEAM SPANS (M 270, Grade 345W)". The steel extrusion and neoprene strip seal shall be paid for in accordance with Special Provision Job 040027 "ARMORED JOINT WITH NEOPRENE STRIP SEAL".

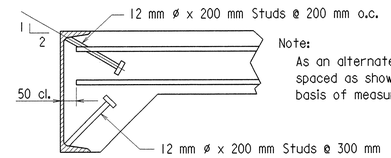

Note:
As an alternate to 16 mm ø studs, 12 mm ø x 200 mm studs spaced as shown may be used. Use weight of 16 mm stud as basis of measurement of Structural Steel in Anchors.

DETAILS OF ALTERNATE ANCHORS

STRIP SEAL JOINT DATA

Bent No(s).	Movement Rating (mm)	"A" Width Perpendicular to Joint at 24 Hour Average Temperature •• of :			"B" Width Perpendicular to Joint at 24 Hour Average Temperature •• of :			"C" Perpendicular to Joint at 24 Hour Average Temperature of 16° C
		4° C	16° C	28° C	4° C	16° C	28° C	
1 And 8	102	72	64	56	60	52	44	58

•• The temperature used to set the joint opening shall be the approximate average air temperature during the 24 hour period immediately before the bolts are tightened. The Engineer shall establish the temperature.

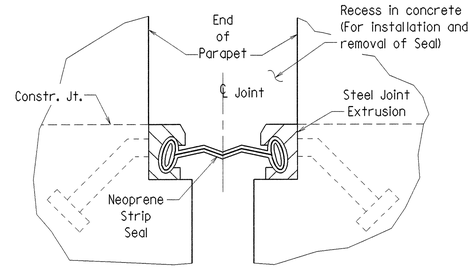

SECTION D-D

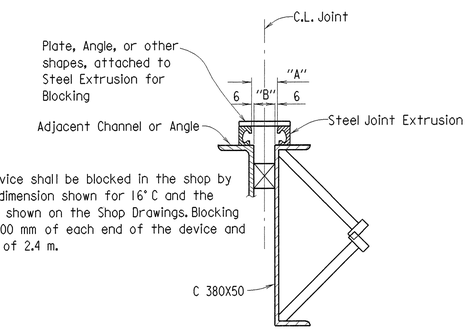

Note:
Each Expansion Joint device shall be blocked in the shop by the Fabricator to the dimension shown for 16° C and the blocking details shall be shown on the Shop Drawings. Blocking shall be placed within 600 mm of each end of the device and with a maximum spacing of 2.4 m.

DETAILS FOR BLOCKING EXPANSION JOINT DEVICE

EXPANSION DEVICE INSTALLATION AT END BENTS:

The concrete span pour shall be placed before the end bent backwall concrete is placed. After beams or girders are erected the blocked expansion device shall be installed and adjusted for grade. All connection bolts shall be fully tightened prior to placing the deck concrete adjacent to the bent. Immediately prior to pouring the backwall concrete, the blocking shall be removed, the opening adjusted for temperature and grade, and the backwall constructed.

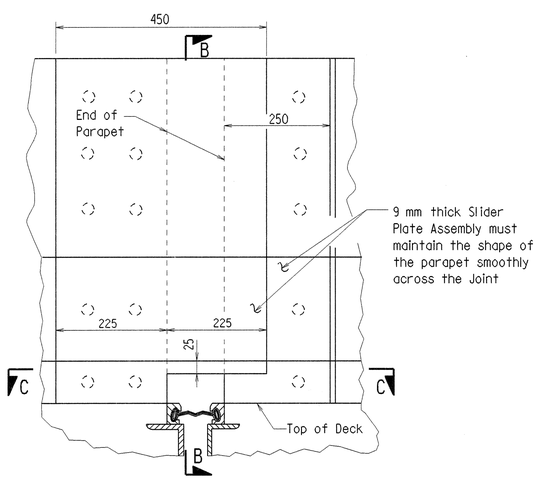

DETAIL OF NEOPRENE SEAL AT CURB

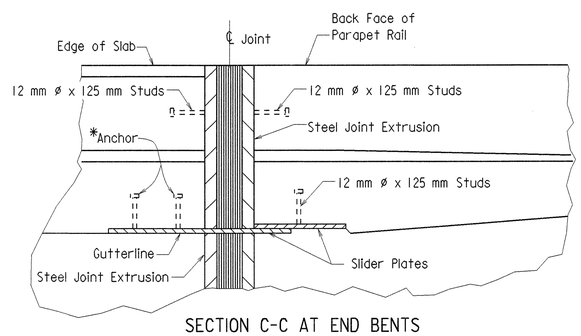

SECTION C-C AT END BENTS

* The method of attachment of the cover slider plate assembly or similar device must be such that it may be removed in order to provide for future replacement of the neoprene seal.

Anchors will not be paid for directly but will be considered subsidiary to "STRUCTURAL STEEL IN BEAM SPANS (M270, Gr. 345W)".

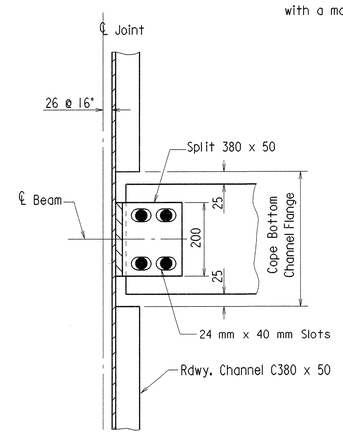

TYPICAL CHANNEL CONNECTION

MICROFILMED
OCT 31 2000

STATE OF ARKANSAS
Edward T. Fain
REGISTERED PROFESSIONAL ENGINEER
No. 3915
8-24-00
EDWARD T. FAIN

BRIDGE ENGINEER

DETAILS OF ARMORED JOINT
WITH NEOPRENE STRIP SEAL
ILLINOIS RIVER

ROUTE 62 SEC. 1
ARKANSAS STATE HIGHWAY COMMISSION
LITTLE ROCK, ARK. BR040027.SI5

DRAWN BY: TEB DATE: 09/15/97 FILENAME: BR040027.SI5
CHECKED BY: AMS DATE: 12-4-97 SCALE: N.T.S.
DESIGNED BY: R.L.W. DATE: 7-24-97
BRIDGE NO. 06732 DRAWING NO. 38845

A H D METRIC

DATE REVISED	DATE FILMED	DATE REVISED	DATE FILMED	FED. ROAD DIST. NO.	STATE	FED. AID PROJ. NO.	SHEET NO.	TOTAL SHEETS
				6	ARK.			
				JOB NO.		040027	36	69
				(1) 06732		ELASTO. BRGS.	38846	

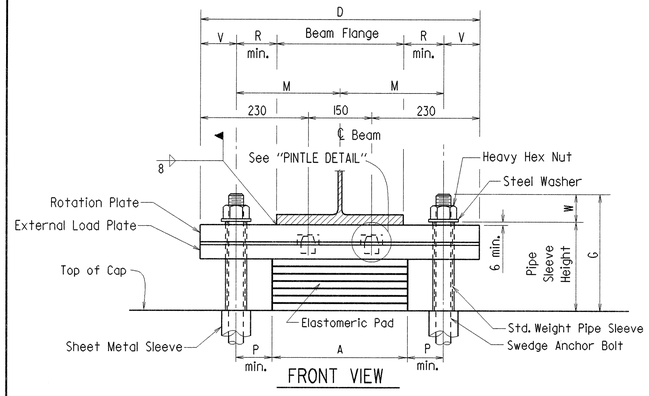

FRONT VIEW

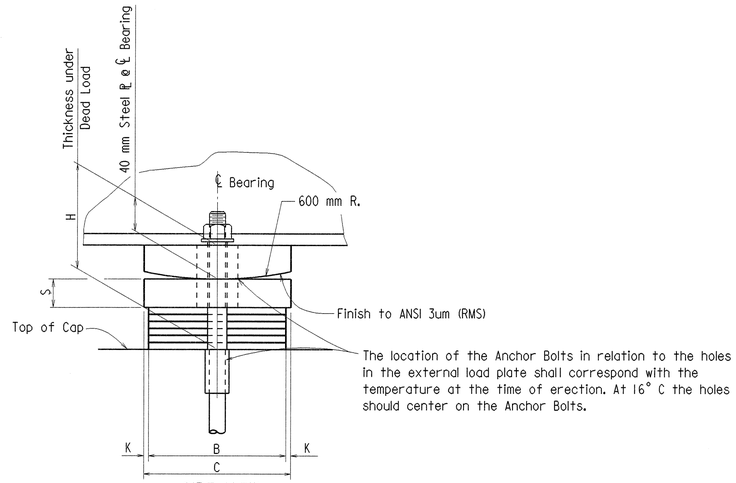

The location of the Anchor Bolts in relation to the holes in the external load plate shall correspond with the temperature at the time of erection. At 16° C the holes should center on the Anchor Bolts.

SIDE VIEW

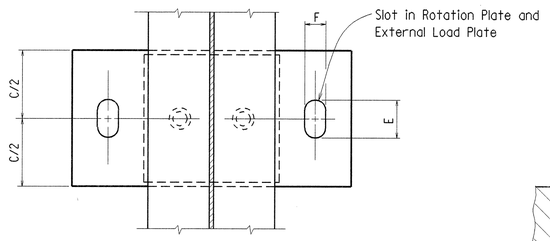

PLAN VIEW

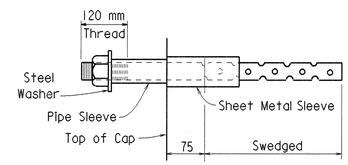

ANCHOR BOLT DETAIL

NOTE: Anchor Bolts may be cast in place or drilled and grouted into place. If Anchor Bolts are to be cast in place, the Galvanized Sheet Metal Sleeves will not be required.

If Anchor Bolts are to be drilled and grouted in place, the Galvanized Sheet Metal Sleeves shall be cast in place as shown. Sleeves shall be dry packed with styrofoam, urethane foam or approved equal prior to pouring of concrete. After pouring of the cap and prior to erection of Structural Steel, the dry pack shall be removed and holes for the anchor bolts shall be accurately drilled into the masonry. Bolts placed in drilled holes shall be accurately set and fixed using a QPL approved epoxy or non-shrink grout that completely fills the holes. Galvanized Sheet Metal Sleeves will not be paid for directly, but will be considered subsidiary to the item "STRUCTURAL STEEL IN BEAM SPANS (M 270, Gr. 345W)".

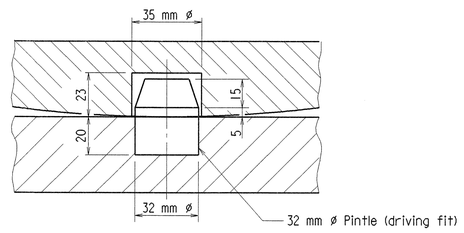

Pintles shall be annealed Stainless Steel, Type 304 or 316, meeting the physical and chemical requirements of ASTM F593 or A276.

PINTLE DETAILS

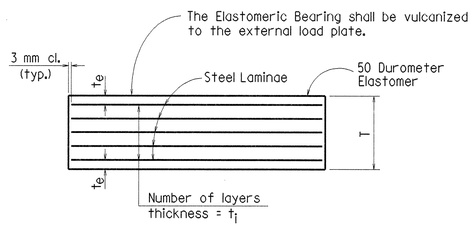

t_e = thickness of elastomer cover on top and bottom of pad

t_i = thickness of elastomer between steel laminae

N = number of elastomer layers of thickness t_i

ELASTOMERIC BEARING

TABLE OF DESIGN VARIABLES (mm)

ANCHOR BOLT DIAMETER	PIPE SLEEVE NOMINAL DIAMETER	SHEET METAL SLEEVE DIA.	STANDARD WASHER SIZE (O.D.)	MINIMUM EMBEDMENT LENGTH	SLOT WIDTH "F"	P Min.	R Min.	V	W
25.4	25.4	76	50.8	260	40 ø	50	50	65	55
31.7	31.7	76	63.5	310	50 ø	50	60	65	60
38.1	38.1	76	76.2	380	60 ø	60	65	70	65
44.4	50.8	100	85.7	460	70 ø	65	70	75	70
50.8	63.5	100	95.2	510	80 ø	70	75	85	80
57.1	63.5	100	101.6	590	80 ø	70	75	85	85
63.5	76.2	100	114.3	640	95 ø	75	85	90	90

GENERAL NOTES

All dimensions are in millimeters (mm) unless otherwise noted.

Elastomeric Bearings shall conform to Section 808 of the Standard Specifications and shall be paid for at the unit price bid for "ELASTOMERIC BEARINGS".

External load plates and Rotation plates shall conform to AASHTO M 270, Grade 345W. Rotation plates shall be cleaned in accordance with subsection 807.84(e) for unpainted Grade 345W steel. Pipe sleeves shall be ASTM A53, Grade B, and shall be galvanized to conform to AASHTO M 232, Class C or AASHTO M 298, Class 50.

External load plates shall be completely fabricated (including bevel, bolt holes, pintle holes, and all shop welding) and shall be blast cleaned to remove rust, loose mill scale, dirt, oil, grease, and other foreign substances before vulcanizing to the elastomeric bearing. The surface in contact with the elastomeric bearing shall be blast cleaned to the surface finish specified in subsection 808.04(b). Other surfaces shall be blast cleaned in accordance with subsection 807.84(e) for unpainted Grade 345W steel.

Anchor Bolts, Washers and Nuts shall conform to subsection 807.07 of the Standard Specifications. The anchor bolt grade of steel shall be as specified in the "TABLE OF FABRICATOR VARIABLES". Indentations shall be circular with rounded bottoms and staggered as shown in the details.

Rotation Plates, Pipe sleeves, Anchor bolts, Washers and Nuts shall be paid for at the unit price bid for "STRUCTURAL STEEL IN BEAM SPANS (M270, Gr. 345W)". Pintles will not be paid for directly, but will be considered subsidiary to the item "ELASTOMERIC BEARINGS".

TABLE OF FABRICATOR VARIABLES

*Maximum Design Load = Service Load

LOCATION	BEARING TYPE	NO. OF BEARINGS EACH BENT	*MAXIMUM DESIGN LOAD (kN)	G	H	ELASTOMERIC PAD A	B	N	t_i	t_e	NUMBER AND THICKNESS OF STEEL LAMINAE	T	EXTERNAL LOAD PLATE C	D	E	F	K	M	S	ANCHOR BOLT: ANCHOR BOLT (ø x L)	GRADE	PIPE SLEEVE SIZE (ø x L)	SHEET METAL SLEEVE SIZE (ø x L)	STEEL WASHER SIZE (O.D.)
BENT NOS. 1 AND 8	Exp.	10	285	331	260	350	230	12	12	6	13 @ 14 ga.	181	260	610	130	60	15	235	40	38.1 ø x 780	55	38.1 ø x 266	76 ø x 270	76.2

MICROFILMED
NOV 01 2000

STATE OF ARKANSAS
Edward T. Fain
REGISTERED PROFESSIONAL ENGINEER
No. 3915
8-24-00
EDWARD T. FAIN

BRIDGE ENGINEER

DETAILS OF
ELASTOMERIC BEARINGS AT
END BENTS

ROUTE 62 SEC. 1

ARKANSAS STATE HIGHWAY COMMISSION

LITTLE ROCK, ARK.

DRAWN BY: TEB DATE: 11/24/97 FILENAME: BR040027.EBI
CHECKED BY: AMS DATE: 12-4-97 SCALE: None
DESIGNED BY: R.L.W. DATE: 8-5-97

BRIDGE NO. 06732 DRAWING NO. 38846

A H METRIC D

DATE REVISED	DATE FILMED	DATE REVISED	DATE FILMED	FED. ROAD DIST. NO.	STATE	FED. AID PROJ. NO.	SHEET NO.	TOTAL SHEETS
				6	ARK.			
				JOB NO.		040027	37	69
				①	06732	ELASTO. BRGS.	38847	

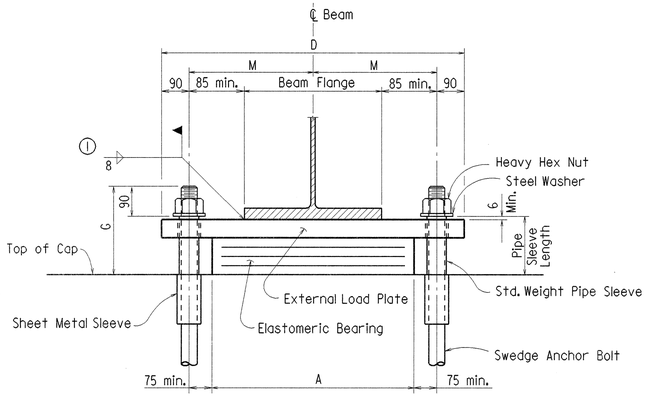

FRONT VIEW - BENT NOS. 2, 3, 6, & 7

① Care shall be taken to ensure that the external load plate is in full and complete contact with the beam or girder flange before welding begins.

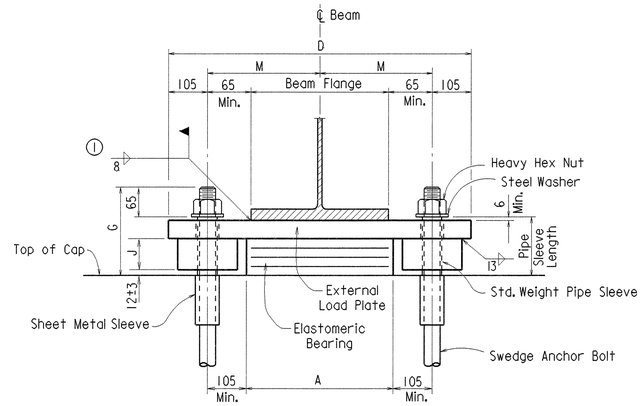

FRONT VIEW - BENT NOS. 4 & 5

① Care shall be taken to ensure that the external load plate is in full and complete contact with the beam or girder flange before welding begins.

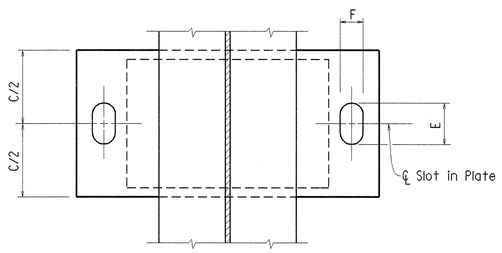

PLAN VIEW BENT NOS. 2, 3, 6, & 7

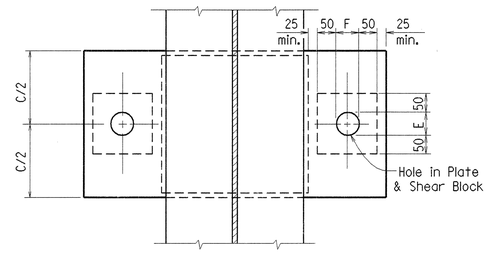

PLAN VIEW - BENT NOS. 4 & 5

GENERAL NOTES

All dimensions are in millimeters (mm) unless otherwise noted.

Elastomeric Bearings shall conform to Section 808 of the Standard Specifications and shall be paid for at the unit price bid for "ELASTOMERIC BEARINGS".

External load plates and shear blocks shall conform to AASHTO M 270, Grade 345W and will not be paid for separately, but will be included in the unit price bid for "ELASTOMERIC BEARINGS". Pipe sleeves shall be ASTM A53, Grade B, and shall be galvanized to conform to AASHTO M 232, Class C or AASHTO M 298, Class 50.

External load plates and External load plates with shear blocks shall be completely fabricated (including bevel, bolt holes and all shop welding) and shall be blast cleaned to remove rust, loose mill scale, dirt, oil, grease and other foreign substances before vulcanizing to the elastomeric bearing. The surface in contact with the elastomeric bearing shall be blast cleaned to the surface finish specified in subsection 808.04(b). Other surfaces shall be blast cleaned in accordance with subsection 807.84(e) for unpainted Grade 345W Steel.

Anchor Bolts, Washers and Nuts shall conform to subsection 807.07 of the Standard Specifications. The anchor bolt grade of steel shall be as specified in the "TABLE OF FABRICATOR VARIABLES". Indentations shall be circular with rounded bottoms and staggered as shown in the details.

Pipe Sleeves, Anchor Bolts, Washers and Nuts shall be paid for at the unit price bid for "STRUCTURAL STEEL IN BEAM SPANS (M 270, Gr. 345W)".

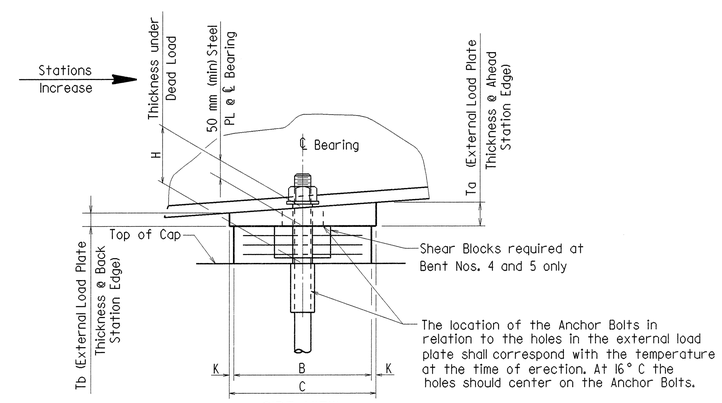

SIDE VIEW

NOTE: Anchor Bolts may be cast in place or drilled and grouted into place. If Anchor Bolts are to be cast in place, the Galvanized Sheet Metal Sleeves will not be required.

If Anchor Bolts are to be drilled and grouted in place, the Galvanized Sheet Metal Sleeves shall be cast in place as shown. Sleeves shall be dry packed with styrofoam, urethane foam or approved equal prior to pouring of concrete. After pouring of the cap and prior to erection of Structural Steel, the dry pack shall be removed and holes for the anchor bolts shall be accurately drilled into the masonry. Bolts placed in drilled holes shall be accurately set and fixed using a QPL approved epoxy or non-shrink grout that completely fills the holes. Galvanized Sheet Metal Sleeves will not be paid for directly, but will be considered subsidiary to the item "STRUCTURAL STEEL IN BEAM SPANS, (M 270, Grade 345W").

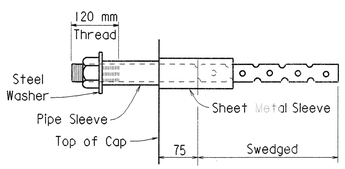

ANCHOR BOLT DETAIL

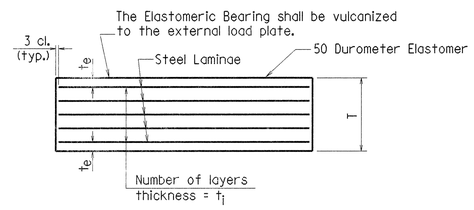

t_e = thickness of elastomer cover on top and bottom of pad

t_i = thickness of elastomer between steel laminae

N = number of elastomer layers of thickness t_i

ELASTOMERIC BEARING

TABLE OF FABRICATOR VARIABLES

BRIDGE NO.	LOCATION: BENT NO(S).	LOCATION: BEAM NO.	BEARING TYPE	NO. of BEARINGS EACH BENT	*MAXIMUM DESIGN LOAD (kN)	G	H	ELASTOMERIC PAD: A	B	N	t_i	t_e	NO. & THICKNESS OF STEEL LAMINAE	T	EXTERNAL LOAD PLATE: C	D	E	F	J	K	M	T_a	T_b	ANCHOR BOLT: ANCHOR BOLT (ø x L)	GRADE	PIPE SLEEVE SIZE (ø x L)	SHEET METAL SLEEVE SIZE (ø x L)	STEEL WASHER SIZE (O.D.)
	2 & 7	All	Exp.	10	531	350	254	350	250	14	12	6	15 @ 14 Ga.	208	280	680	155	95	—	15	250	50	50	63.5 x 1030	55	76.2 x 260	100 x 150	114.3
	3 & 6	All	Exp.	10	531	350	254	350	250	14	12	6	15 @ 14 Ga.	208	280	680	135	95	—	15	250	50	50	63.5 x 1030	55	76.2 x 260	100 x 150	114.3
	4 & 5	All	Fix.	10	531	257	186	350	220	9	12	6	10 @ 14 Ga.	139	250	770	60	60	124	15	280	50	50	38.1 x 680	55	38.1 x 192	76 x 150	76.2

*Maximum Design Load = Service Load

MICROFILMED NOV 01 2000

STATE OF ARKANSAS Edward T. Fain REGISTERED PROFESSIONAL ENGINEER No. 3915 8-24-00 EDWARD T. FAIN

BRIDGE ENGINEER

DETAILS OF
ELASTOMERIC BEARINGS AT
INTERIOR BENTS
ILLINOIS RIVER

ROUTE 62 SEC. 1

ARKANSAS STATE HIGHWAY COMMISSION

LITTLE ROCK, ARK.

DRAWN BY: TEB DATE: 09/17/97 FILENAME: BR040027.EBG

CHECKED BY: AMS DATE: 12-4-97 SCALE: None

DESIGNED BY: R.L.W. DATE: 8-15-97

BRIDGE NO. 06732 DRAWING NO. 38847

METRIC

DATE REVISED	DATE FILMED	DATE REVISED	DATE FILMED	FED. ROAD DIST. NO.	STATE	FED. AID PROJ. NO.	SHEET NO.	TOTAL SHEETS
				6	ARK.			
				JOB NO.		040027	38	69
				①	06732	SPEC. APPR. GUTRS.	38848	

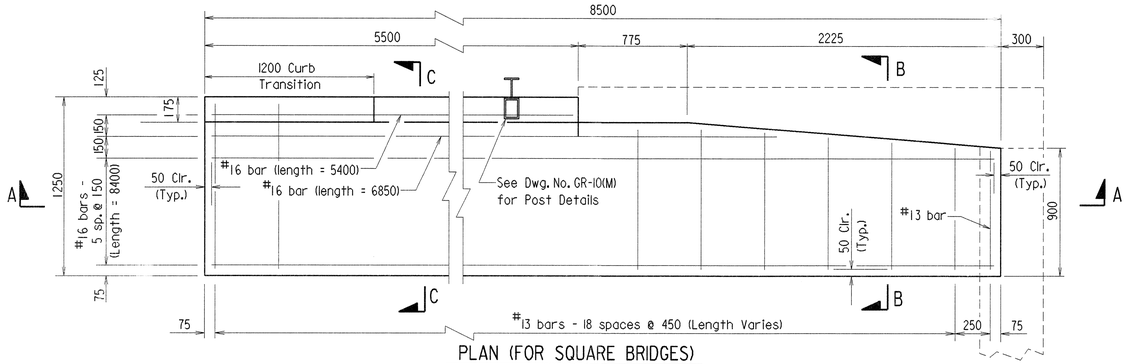

PLAN (FOR SQUARE BRIDGES)

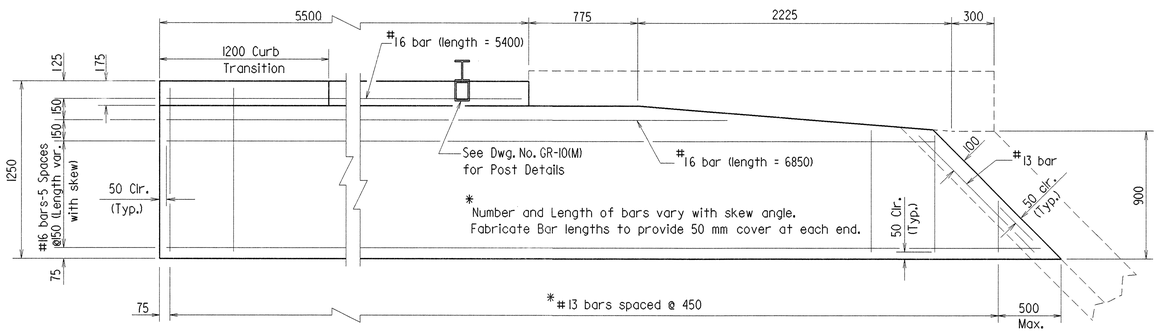

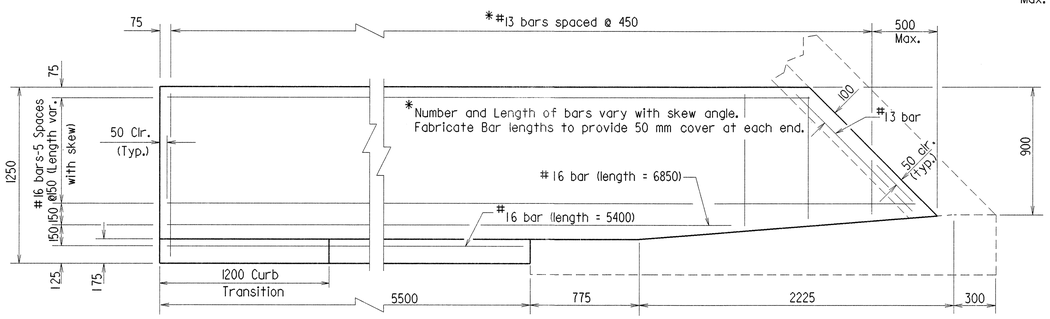

PLAN (FOR SKEWED BRIDGES)

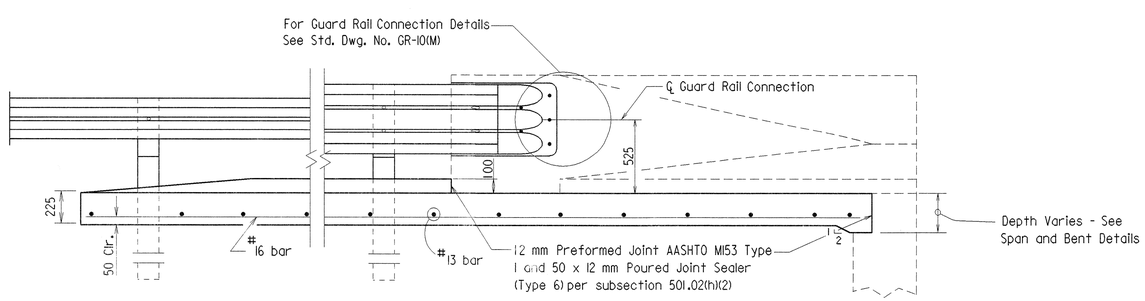

SECTION A-A

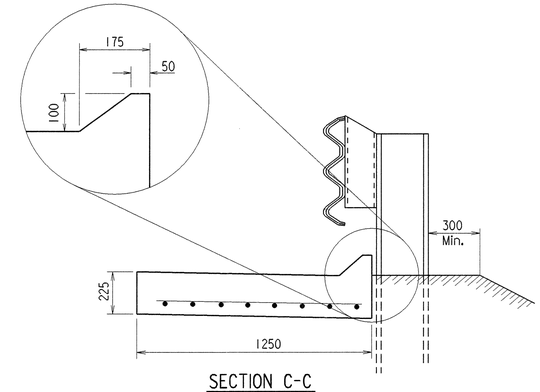

SECTION C-C

N.T.S.

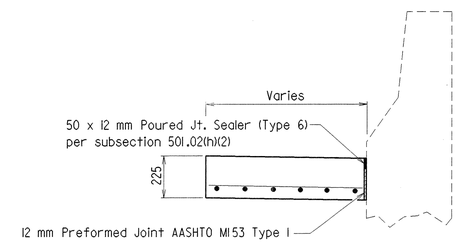

SECTION B-B

N.T.S.

QUANTITIES FOR ONE SQUARE APPROACH GUTTER

Concrete	Reinforcing Steel
2.24 m^3	117 kg

GENERAL NOTES

All dimensions are in millimeters unless otherwise noted.

Concrete shall be Class S or Class S (AE) or mixture used for Portland Cement Concrete Pavement.

Reinforcement Steel shall conform to ASTM A 615/A615M-96a, Grade 420. Fabricate bar lengths to provide 50 mm cover at each end.

Approach Gutters will be measured and paid for in accordance with Section 504 of the Standard Specifications.

MICROFILMED
NOV 01 2000

STATE OF ARKANSAS
Edward T. Fain
REGISTERED PROFESSIONAL ENGINEER
No. 3915
8-24-00
EDWARD T. FAIN

BRIDGE ENGINEER

DETAILS OF TYPE SPECIAL APPROACH GUTTERS ILLINOIS RIVER

ROUTE 62 SEC. 1

ARKANSAS STATE HIGHWAY COMMISSION

LITTLE ROCK, ARK.

DRAWN BY: TEB	DATE: 07/31/00	FILENAME: BR040027.AGI	
CHECKED BY: AMS	DATE: 12-5-97	SCALE: 1:20 or as noted	
DESIGNED BY:	DATE:		

BRIDGE NO. 06732 DRAWING NO. 38848

AHD METRIC

DATE REVISED	DATE FILMED	DATE REVISED	DATE FILMED	FED. ROAD DIST. NO.	STATE	FED. AID PROJ. NO.	SHEET NO.	TOTAL SHEETS
8-31-95	8-31-95			6	ARK.			
3-14-96	3-14-96			JOB NO.			39	
				①	EMBANKMENT & BACKFILL		36500	

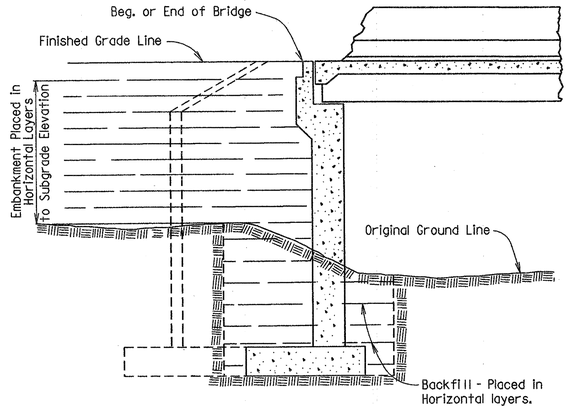

EMBANKMENT CONSTRUCTION AND FOOTING BACKFILL AT VERTICAL WALL ABUTMENTS

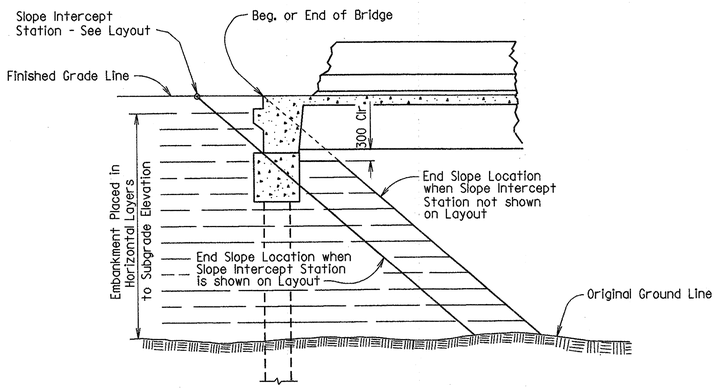

EMBANKMENT CONSTRUCTION AT SPILL-THROUGH PILE END BENTS

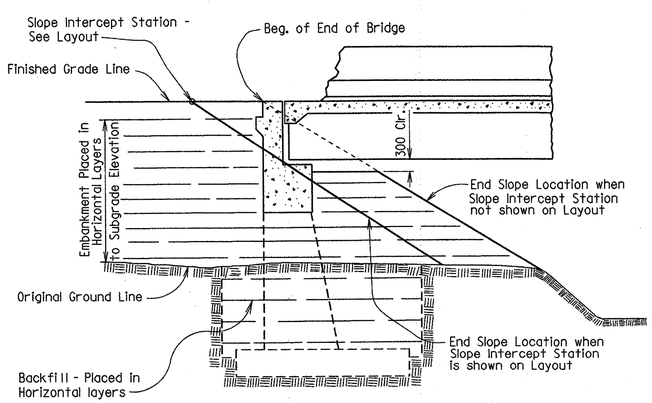

EMBANKMENT CONSTRUCTION AND FOOTING BACKFILL AT SPILL-THROUGH END BENTS

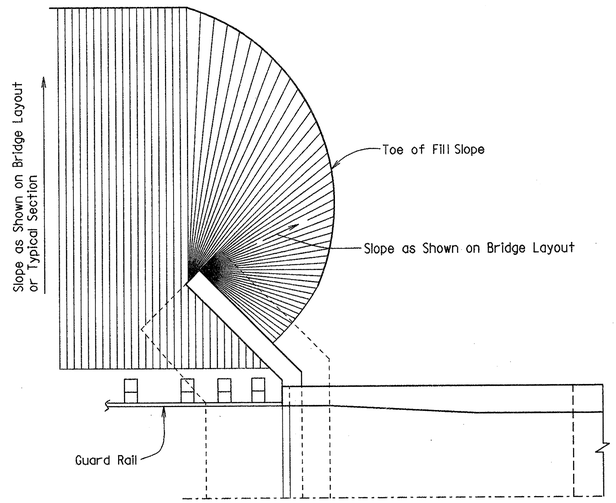

VERTICAL WALL ABUTMENTS

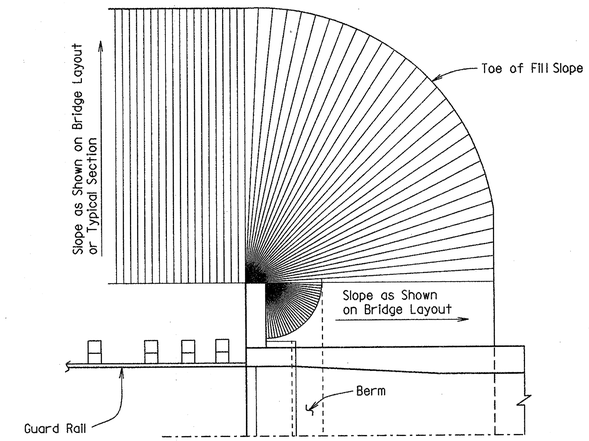

SPILL-THROUGH END BENTS WITH STUB WING

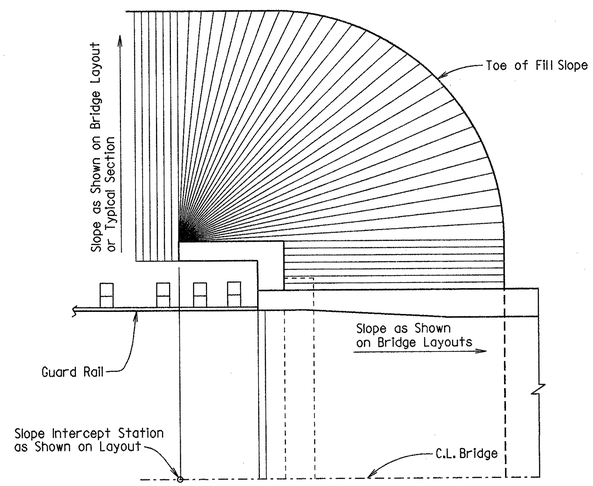

SPILL-THROUGH END BENTS WITH TURNBACK WING

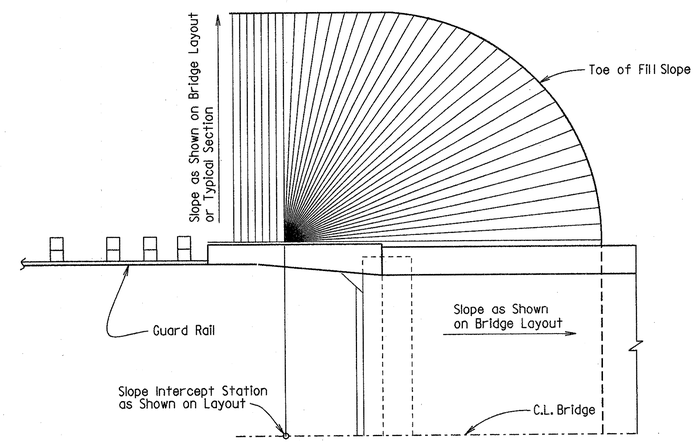

SPILL-THROUGH END BENTS WITH TRANSITION WING

METHOD OF DETERMINING FILL SLOPE LOCATION AT BRIDGE ENDS

All dimensions are in millimeters unless otherwise noted.

GENERAL NOTES

The Bridge End Embankment shall be defined as a section of embankment, not less than 6.0 m long adjacent to the bridge end, together with the side slopes and slopes under the bridge end including around the end of wingwalls. Embankment adjacent to structures shall be constructed in 100 mm horizontal layers (loose measure) and compacted by the use of mechanical equipment to the satisfaction of the Engineer.
Refer to subsections 210.09, 210.10 and 801.08 of the Specifications for construction requirements.

⚠1 Added DFL P.E. Seal; Changed Title; by J.P.S.; 3-14-96

STATE OF ARKANSAS REGISTERED PROFESSIONAL ENGINEER No. 2168 3-12-96 DALE F. LOE

BRIDGE ENGINEER

EMBANKMENT CONSTRUCTION AND BACKFILL AT BRIDGE ENDS
ROUTE SEC.
ARKANSAS STATE HIGHWAY COMMISSION
LITTLE ROCK, ARK.

DRAWN BY: LDF DATE: 8-31-95
CHECKED BY: DHP DATE: 8-31-95 SCALE: NO SCALE
DESIGNED BY: STD. DATE:
BRIDGE NO. DRAWING NO. 36500

A H H METRIC D

MICROFILMED NOV 01 2000

B36500.STD

DATE REVISED	DATE FILMED	DATE REVISED	DATE FILMED	FED. ROAD DIST. NO.	STATE	FED. AID PROJ. NO.	SHEET NO.	TOTAL SHEETS
6-8-95	6-8-95			6	ARK.			
3-14-96	3-14-96			JOB NO.			40	
7-18-96	7-18-96							

(1) RIP. & EXCAV. 36501

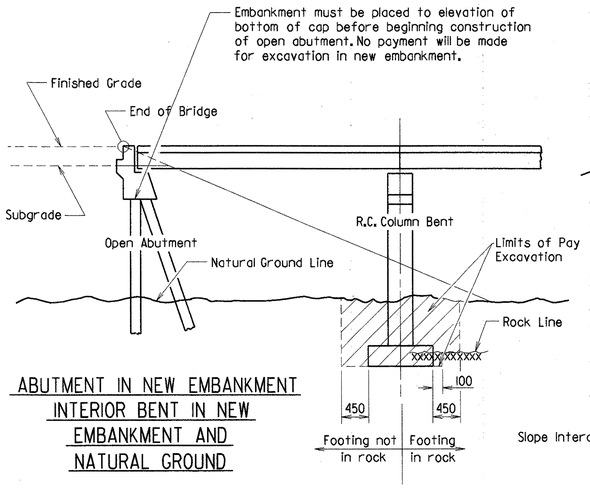

ABUTMENT IN NEW EMBANKMENT INTERIOR BENT IN NEW EMBANKMENT AND NATURAL GROUND

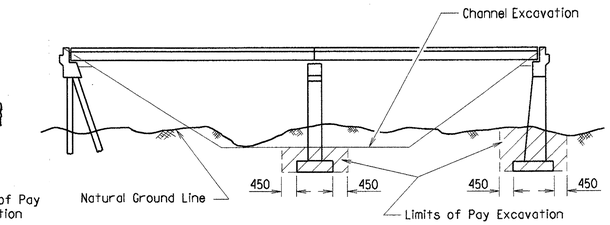

BRIDGE LOCATION WITH DESIGNATED CHANNEL CHANGE

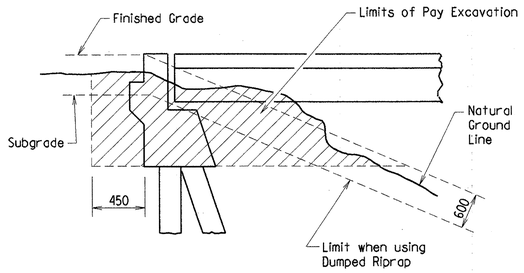

ABUTMENT IN NATURAL GROUND

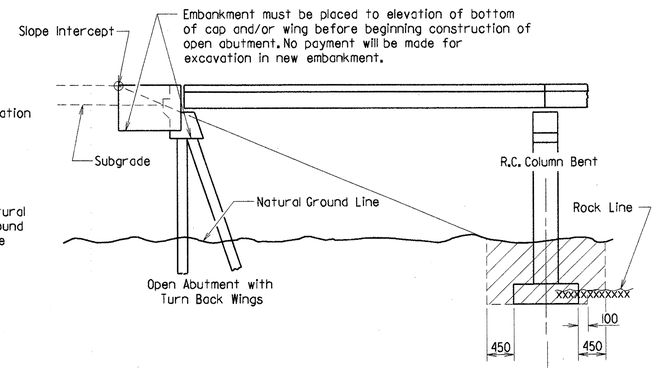

ABUTMENT IN NEW EMBANKMENT INTERIOR BENT IN NATURAL GROUND

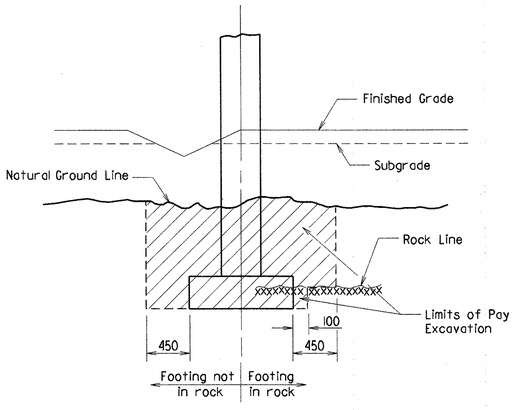

BENT IN ROADWAY FILL SECTION AND NATURAL GROUND

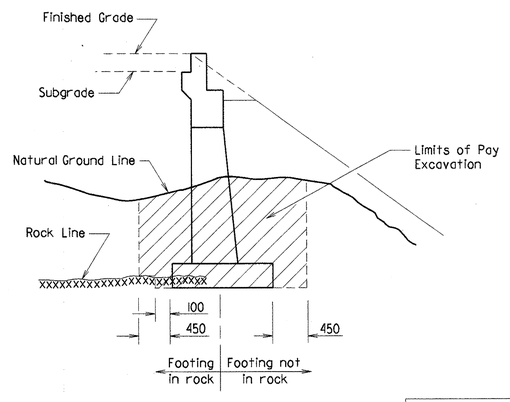

ABUTMENT IN NATURAL GROUND AND NEW EMBANKMENT

EXCAVATION FOR STRUCTURES

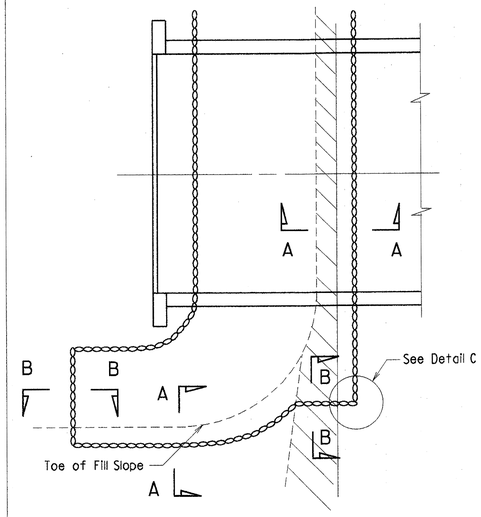

PLAN OF DUMPED RIPRAP

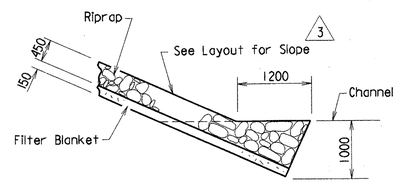

SECTION A-A

(Toe Excavation in Soil)

Note: Excavation for Toes is not a Pay Item

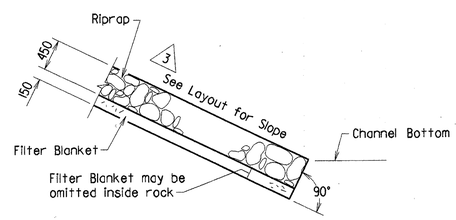

SECTION A-A

(Toe Excavation in Rock)

Use this type of Toe when rock which is in a stable condition is encountered.

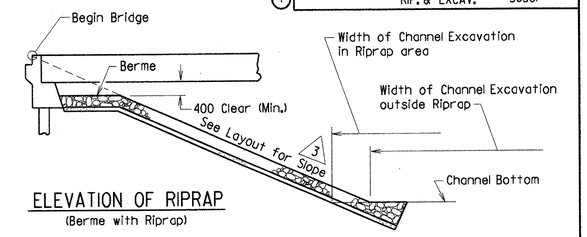

ELEVATION OF RIPRAP

(Berme with Riprap)

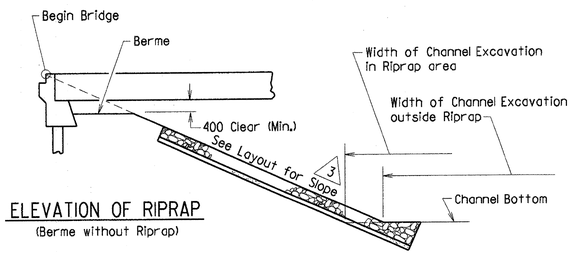

ELEVATION OF RIPRAP

(Berme without Riprap)

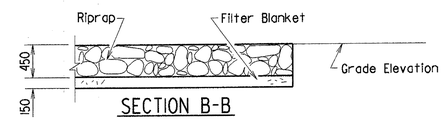

SECTION B-B

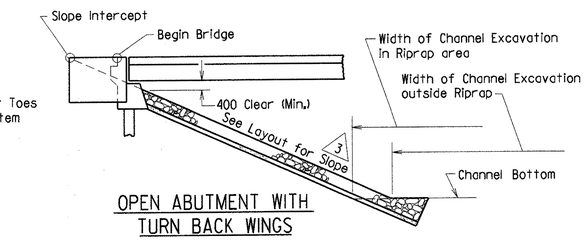

OPEN ABUTMENT WITH TURN BACK WINGS

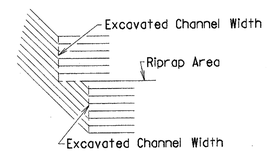

DETAIL C

DUMPED RIPRAP AND FILTER BLANKET

GENERAL NOTES

All dimensions are in millimeters (mm) unless otherwise noted.

(3) In lieu of a Granular Filter Blanket, a synthetic fiber geotextile fabric complying with the requirements of subsection 816.02(e) may be used.

Details for computing Excavation for Structures are included for information as to how plan quantities were calculated and for use when adjusting quantities when changing footing elevation.

(3) Revised for 1996 Specs. by A.M.S. 07-18-96, Ck'd by C.P.B.

(2) Added DFL P.E. Seal by J.P.S.; 3-14-96

(1) Added Metric Logo

STATE OF ARKANSAS REGISTERED PROFESSIONAL ENGINEER No. 2168 7-12-96 DALE F. LOE

BRIDGE ENGINEER

DETAILS FOR DUMPED RIPRAP AND FILTER BLANKET AND DETAILS FOR COMPUTING EXCAVATION FOR STRUCTURES

ROUTE SEC.

ARKANSAS STATE HIGHWAY COMMISSION

LITTLE ROCK, ARK.

DRAWN BY: MJT DATE: 12-06-93
CHECKED BY: CPB DATE: 4-10-95
DESIGNED BY: DATE:
SCALE: NO SCALE

BRIDGE NO. DRAWING NO. 36501

METRIC

MICROFILMED NOV 01 2000

B36501.STD

DATE REVISED	DATE FILMED	DATE REVISED	DATE FILMED
6-8-95	6-8-95		
3-14-96	3-14-96		
7-18-96	7-18-96		

FED. ROAD DIST. NO.	STATE	FED. AID PROJ. NO.	SHEET NO.	TOTAL SHEETS
6	ARK.			
JOB NO.			41	
NAME PLATES			36502	

1

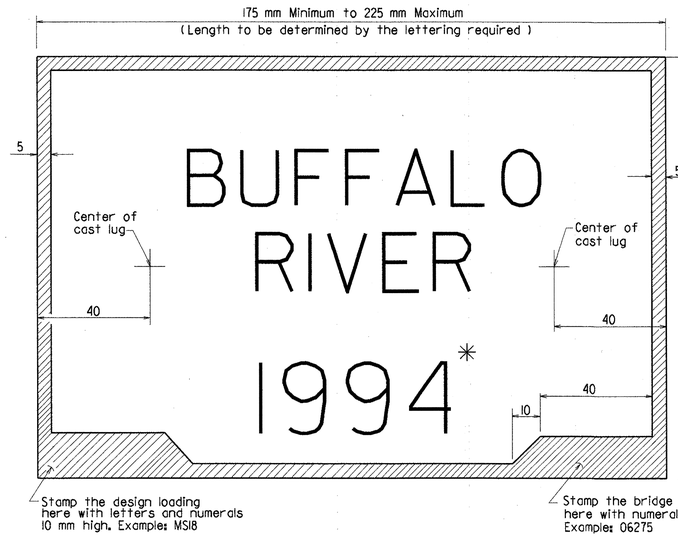

TYPICAL BRIDGE NAME PLATE - STYLE 1
STREAM CROSSINGS

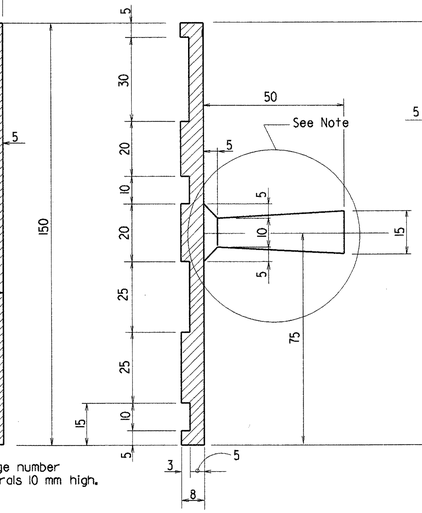

Note: Alternate attachments may be used provided such attachments are submitted and approval secured before fabrication is begun.

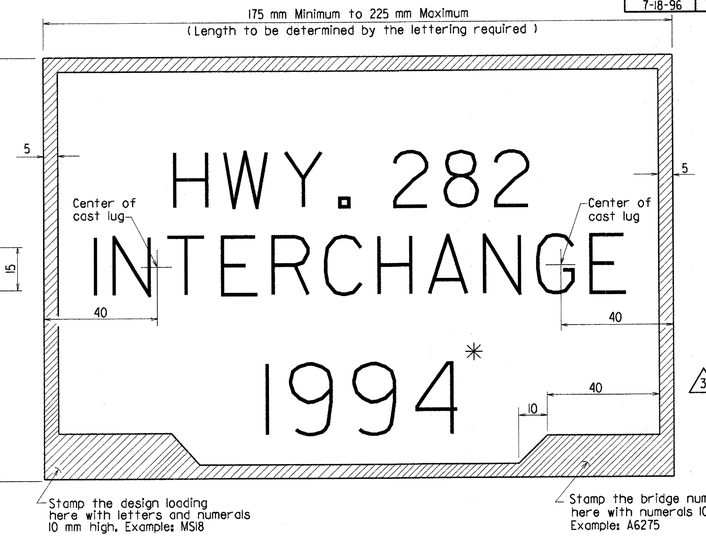

TYPICAL BRIDGE NAME PLATE - STYLE 3
GRADE SEPARATION STRUCTURES

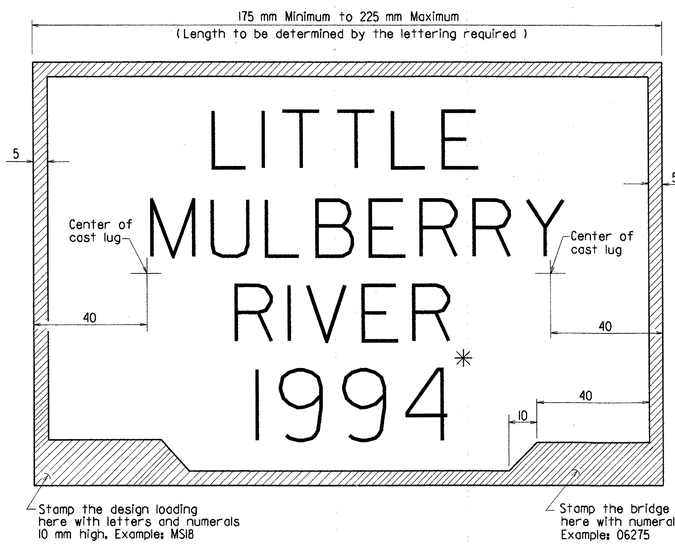

TYPICAL BRIDGE NAME PLATE - STYLE 2
STREAM CROSSINGS

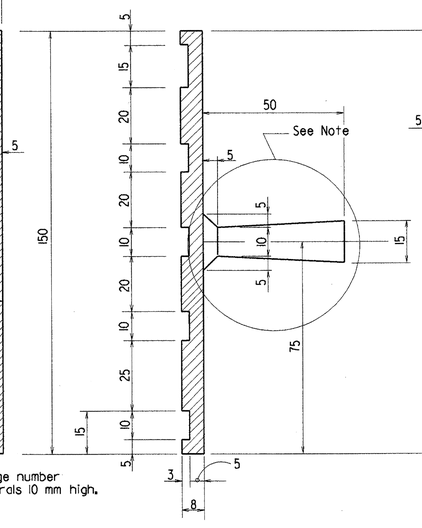

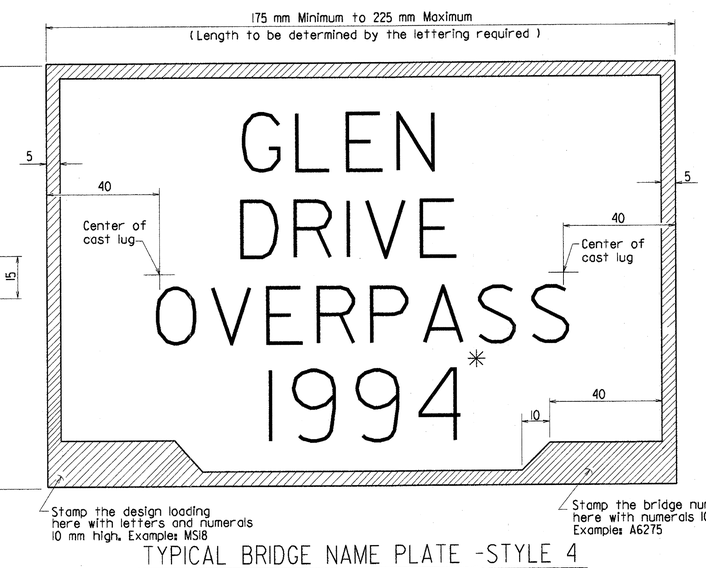

TYPICAL BRIDGE NAME PLATE -STYLE 4
GRADE SEPARATION STRUCTURES

GENERAL NOTES

All dimensions are in millimeters unless otherwise noted.

Name plates shall be either cast aluminum or bronze and shall meet the material requirements as specified in Section 812 of the Standard Specifications.

Body of plate shall be 5 mm thick and shall include two tapering cone lugs 10 mm to 15 mm x 50 mm long. The border and all lettering shall be raised 3 mm above the face of plate and shall be polished.

All lettering shall be plain gothic, square cut and not tapered.

The number of plates required and the location and name on the plate for each bridge shall be as designated on the plans.

3 Specifications: Arkansas State Highway and Transportation Department Standard Specifications for Highway Construction, 1996 Edition, with applicable Supplemental Specifications and Special Provisions.

* Year in which contract is awarded.

MICROFILMED
NOV 01 2000

3 Revised for 1996 Specs. by A.M.S. 07/18/96, Ckd. by C.P.B.

2 Added DFL P.E. Seal: 3-14-96 by J.P.S.;

1 Added Metric Logo

STATE OF ARKANSAS
REGISTERED PROFESSIONAL ENGINEER
No. 21689
7-9-96
DALE F. LOE
BRIDGE ENGINEER

DETAILS OF STANDARD TYPE C BRIDGE NAME PLATES

ROUTE SEC.

ARKANSAS STATE HIGHWAY COMMISSION
LITTLE ROCK, ARK.

DRAWN BY: AMS DATE: 11-23-93
CHECKED BY: CPB DATE: 4-10-95
DESIGNED BY: DATE:
SCALE: FULL SIZE
BRIDGE NO.
DRAWING NO. 36502

B36502.STD

DATE REVISED	DATE FILMED	DATE REVISED	DATE FILMED	FED. ROAD DIST. NO.	STATE	FED. AID PROJ. NO.	SHEET NO.	TOTAL SHEETS
4-28-95	4-28-95	7-18-96	7-18-96	6	ARK.			
6-8-95	6-8-95	4-3-97	4-3-97	JOB NO.			42	
3-14-96	3-14-96					RIPRAP & PILE	36505	

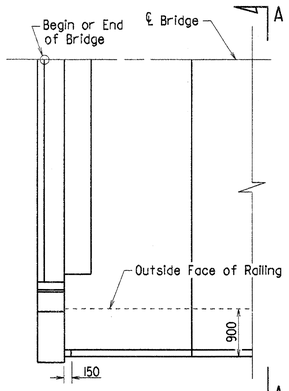

PLAN

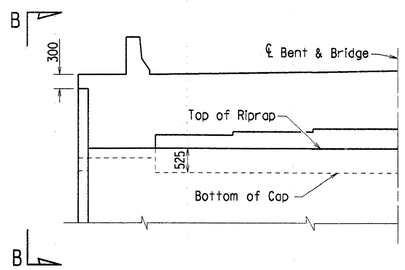

VIEW A-A

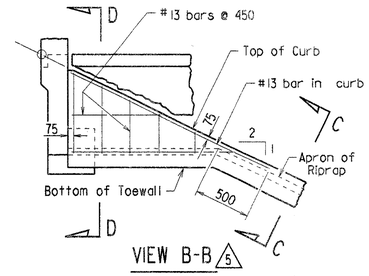

VIEW B-B 5

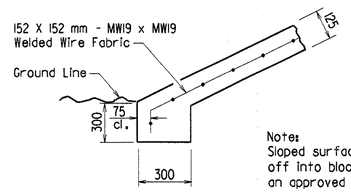

TOE WALL

Note:
Sloped surfaces of concrete riprap to be marked off into blocks (construction joints optional) with an approved grooving tool, spacing the grooved lines about 1.5 m apart.

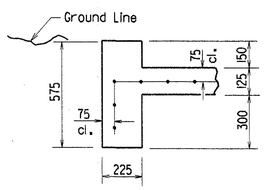

SECTION C-C

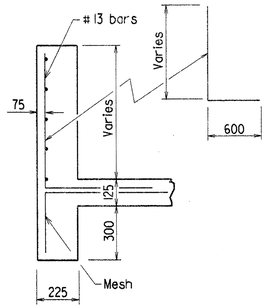

SECTION D-D 5

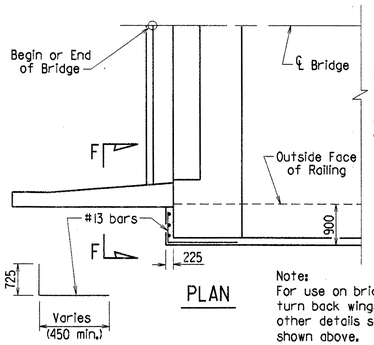

PLAN

Note:
For use on bridges with turn back wings and concrete riprap on corner slopes. All other details same as shown above.

Note:
For use on bridges with turn back wings. All other details same as shown above.

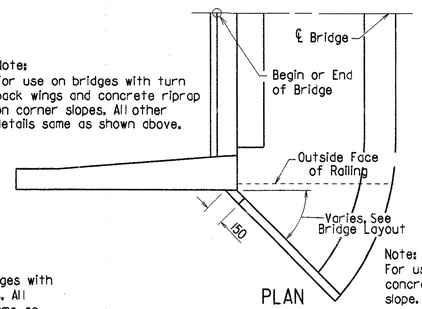

PLAN

Note:
For use on bridges with concrete riprap on corner slope. All other details same as shown above.

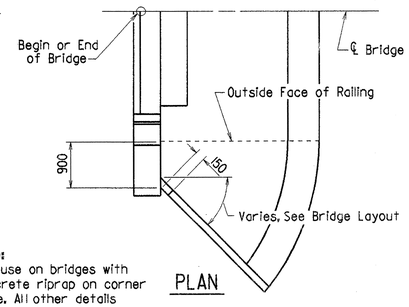

PLAN

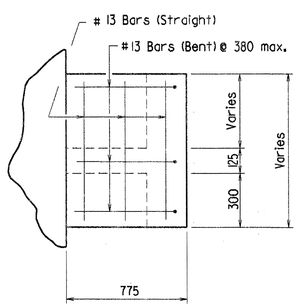

SECTION F-F 5

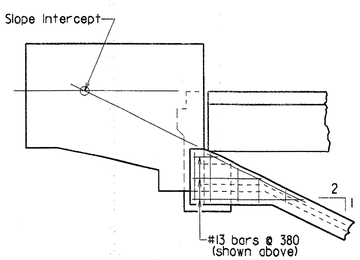

ELEVATION 5

DETAILS OF CONCRETE RIPRAP

General Note: All dimensions are in millimeters (mm) unless otherwise noted.

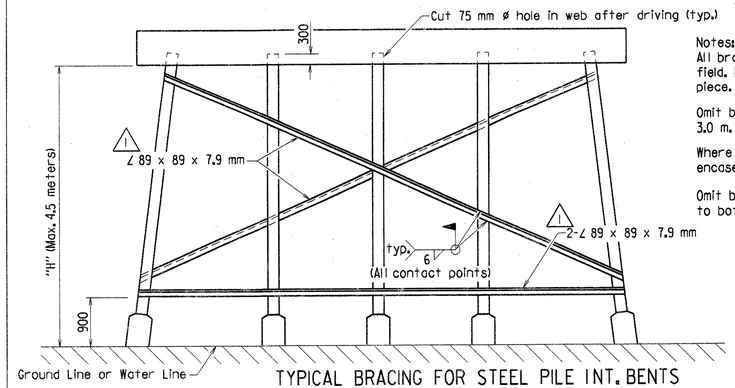

TYPICAL BRACING FOR STEEL PILE INT. BENTS

Notes:
All bracing shall be cut and welded in the field. Each brace shall be furnished in one piece. Payment shall be made under item 807.

Omit bottom bracing where "H" is less than 3.0 m. Omit all bracing where "H" is less than 1.5 m.

Where required by the bridge layout sheet, pile encasements shall be constructed.

Omit bracing where pile encasement is extended to bottom of bent cap.

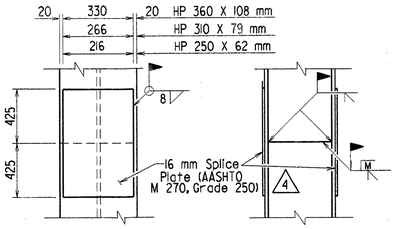

Note: The contractor may for his own convenience and at his own expense provide as many as three splices per pile for steel bearing piling. Minimum spacing between splices shall be 1.5 m.

PILE SPLICE DETAIL

Scale 1:10

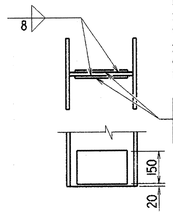

REINFORCING DETAIL FOR STEEL PILE TIP

Scale 1:10

Notes:
Steel pile tip reinforcing not required when approved H-Pile driving points are used.

Steel pile tip reinforcing will not be paid for directly, but shall be considered subsidiary to the item "Steel Piling".

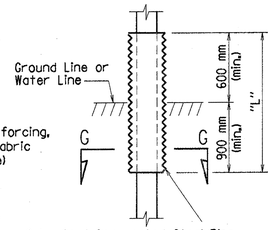

*In lieu of #10 ties and vertical bar reinforcing, 152 X 152 mm - MW19 X MW19 Welded Wire Fabric may be provided. (Lap 1/2 Circumference)

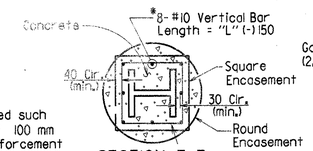

SECTION E-E

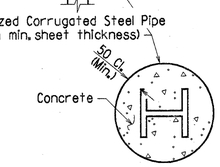

SECTION G-G

Pile Encasement Notes:

Extend encasement to bottom of cap when noted on bridge layout.

All Concrete shall be Class S. If concrete cannot be placed in the dry, seal concrete may be deposited under water.

5 4 All Reinforcing Steel shall conform to ASTM A 615/A 615M-96a, Grade 420. Welded Wire Fabric shall conform to AASHTO M 55 or M 225. Galvanized Corrugated Steel Pipe shall conform to AASHTO M 36 and M 218.

Concrete, reinforcing steel, welded wire fabric, and galvanized corrugated steel pipe will not be paid for separately, but will be considered included in the contract unit price bid for "Pile Encasement".

ALTERNATE PILE ENCASEMENT DETAILS

**Encasement dimensions shall be sized such that a minimum concrete cover of 100 mm from the H-Pile is maintained. Reinforcement shall be sized to provide a minimum concrete cover of 40 mm and a minimum clearance of 30 mm from the pile.

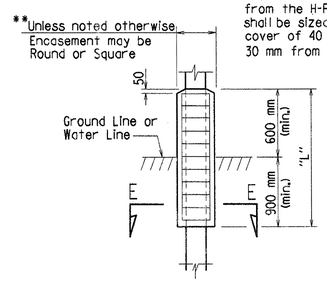

PILE ENCASEMENT DETAILS

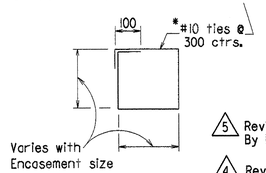

5 Revised rebar designation By M.J.T. 4-3-97, Ckd. by JWD

4 Revised for 1996 Specs. by A.M.S. 07-18-96, Ckd. by CPB

3 Added DFL P.E. Seal; by J.P.S.; 3-14-96

2 Added Metric Logo

1 Revised ∠ size ; 4-28-95

STATE OF ARKANSAS
REGISTERED PROFESSIONAL ENGINEER
No. 2168
DALE F. LOB
BRIDGE ENGINEER

DETAILS OF CONCRETE RIPRAP AND MISC. DETAILS OF STEEL PILING

ROUTE SEC.

ARKANSAS STATE HIGHWAY COMMISSION

LITTLE ROCK, ARK.

DRAWN BY: MJT DATE: 12-17-93
CHECKED BY: CPB DATE: 4-10-95
DESIGNED BY: DATE:

SCALE: No Scale or As Noted

BRIDGE NO. DRAWING NO. 36505

METRIC

MICROFILMED
NOV 01 2000

B36505.STD

DATE REVISED	DATE FILMED	DATE REVISED	DATE FILMED	FED. ROAD DIST. NO.	STATE	FED. AID PROJ. NO.	SHEET NO.	TOTAL SHEETS
6-8-95	6-8-95	11-27-96	11-27-96	6	ARK.		43	
3-14-96	3-14-96			JOB NO.				
7-18-96	7-18-96							

(1) BR. DECK FORMS 36515

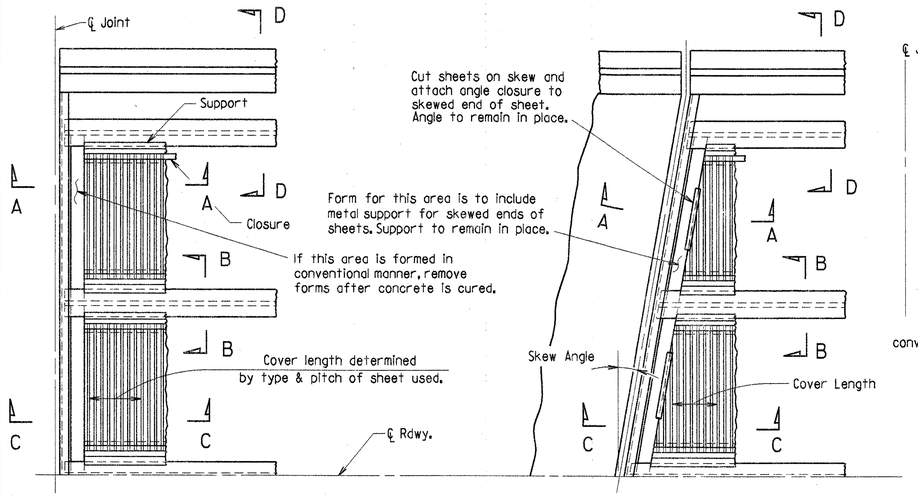

PART PLAN - SQUARE SPAN
N.T.S.

PART PLAN - SKEWED SPAN
N.T.S.

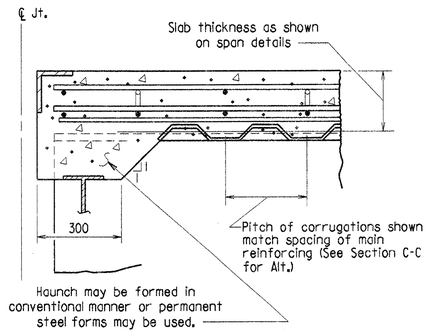

SECTION A-A
N.T.S.
(Angle at end of span)

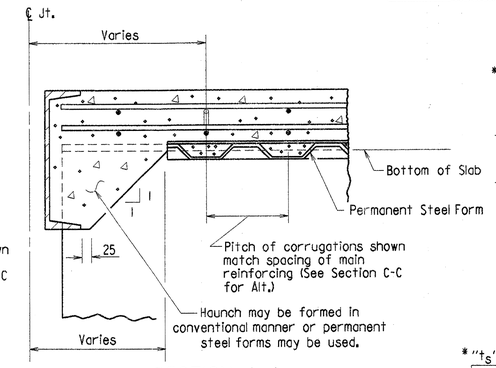

SECTION A-A
N.T.S.
(Channel at end of span)

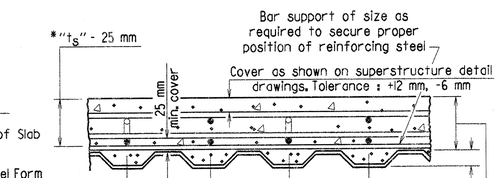

(4) SECTION C-C
N.T.S.

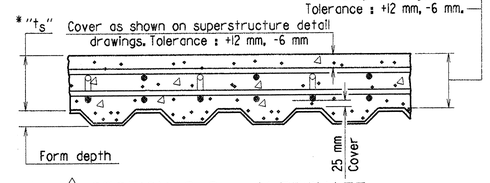

(4) SECTION C-C - ALTERNATE
N.T.S.
(Applicable when corrugations do not match spacing of main reinforcement)

*t_s = slab thickness as shown on superstructure detail drawings.

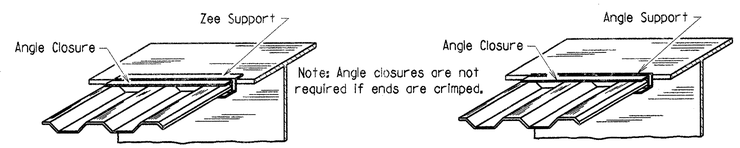

SKETCH OF PERMISSIBLE SUPPORTS
N.T.S.

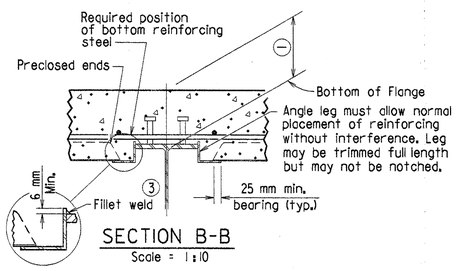

SECTION B-B
Scale = 1:10
(Showing permissible support for tension flange where shear connectors are used, and for all compression flanges)

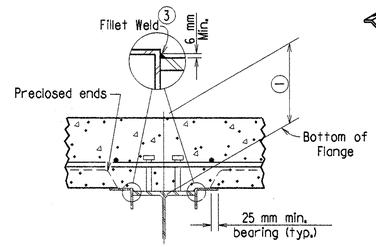

SECTION B-B
Scale = 1:10
(Showing permissible support for tension flange where shear connectors are used and for all compression flanges)

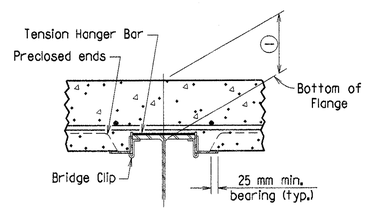

SECTION B-B
Scale = 1:10
(Showing permissible support for tension flange where shear connectors are not used)

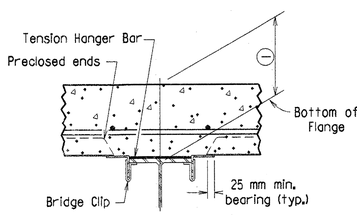

SECTION B-B
Scale = 1:10
(Showing permissible support for tension flange where shear connectors are not used)

(3) Minimum weld: 3 x 25 @ 425 mm. More weld may be required; maximum length per weld = 40 mm. (typ.)

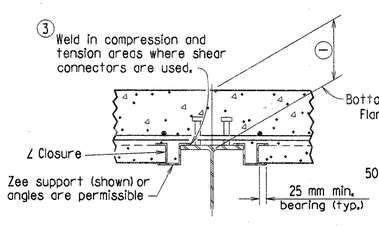

SECTION B-B
Scale = 1:10
(Showing ∠ Closure)

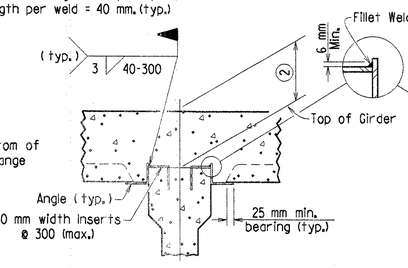

(4) SECTION B-B
(FOR CONCRETE GIRDERS)
Scale = 1:10
(Showing support by insert cast in girder)

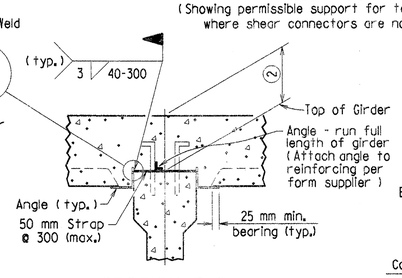

SECTION B-B
(FOR CONCRETE GIRDERS)
Scale = 1:10
(Showing support by Strap)

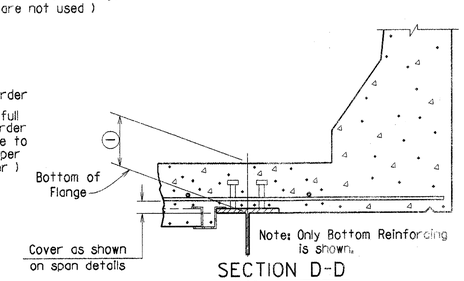

SECTION D-D
N.T.S.

GENERAL NOTES (4)

All dimensions are in millimeters unless otherwise noted.

Permanent steel deck forms may be used at the Contractor's option and shall be at no additional cost to the Department. Such use may result in changes to the dead load deflection of the girder. Any cost for adjustments due to a change in dead load deflection will be borne by the Contractor. Payment for deck concrete and structural steel will not be increased due to use of permanent steel deck forms.

Permanent steel deck forms shall conform to subsection 802.14(b) of the Standard Specifications. Detailed plans, including detailed calculations and manufacturer's technical brochure, shall be submitted to and approved by the Bridge Engineer before work of forming the bridge deck is started.

Welding of form supports to the tension flange of steel girders will be permitted only in areas where shear connectors are used. When welding is not allowed, the method of fastening Z or ∠ supports to the flange must be approved by the Bridge Engineer.

Form sheets shall be fastened to supporting members and to each other with galvanized metal screws sufficient in size and number to provide a secure attachment. Alternate methods of attachment must be approved by the Bridge Engineer.

When the pitch of form corrugations match the reinforcing spacing, transversely align form sheets across the bridge to maintain the correct orientation of continuous reinforcing bars in the corrugations.

Bar support rods, when used, shall be sized and spaced to adequately support the bottom reinforcing mat at the required position.

High chairs shall be sized to support the top mat of reinforcing at the proper position. High chairs shall be placed at locations shown on the detail drawings.

Specifications: Arkansas State Highway and Transportation Department Standard Specifications for Highway Construction, 1996 Edition with applicable supplemental specifications and special provisions.

(4)(1) Distance from top of slab to bottom of top flange as measured at centerline girder and as shown on superstructure detail drawings. This dimension may vary within the following limits to maintain the grade and slab thickness tolerances : Minimum - occurs when either the top flange or the support angle leg contacts the bottom reinforcing steel; Maximum = t_s + 44 mm + flange thickness. See Section C-C for slab thickness tolerance between adjacent girder flanges.

(2) Distance from top of slab to top of girder as measured at centerline girder and as shown on superstructure detail drawings. This dimension may vary within the following limits to maintain the grade and slab thickness tolerances : Minimum - occurs when either the top of girder or the support angle leg contacts the bottom reinforcing steel; Maximum - value shown on the superstructure detail drawings when removable forms are used. See Section C-C for slab thickness tolerance between adjacent girder flanges.

(4) Revised Gen. Notes & Added Slab & Haunch Tolerances. By MJT 11/27/96, Ckd. By C.P.B.

(3) Revised for 1996 Specs. by A.M.S. 07-18-96, Ckd. by CPB

(2) Added DFL P.E. Seal : by J.P.S.: 3-14-96

(1) Added Metric Logo

STATE OF ARKANSAS REGISTERED PROFESSIONAL ENGINEER No. 3168 DALE P. 10-17-96

BRIDGE ENGINEER

DETAILS OF PERMISSIBLE TYPE PERMANENT STEEL BRIDGE DECK FORMS FOR STEEL & CONCRETE GIRDER SPANS

ROUTE SEC.

ARKANSAS STATE HIGHWAY COMMISSION

LITTLE ROCK, ARK.

DRAWN BY: MJT DATE: 11-16-93
CHECKED BY: CPB DATE: 4-10-95
DESIGNED BY: DATE:
SCALE: as noted

BRIDGE NO. DRAWING NO. 36515

METRIC

MICROFILMED
NOV 01 2000

B36515.STD

REFER TO TABULATION OF QUANTITIES
FOR 'W' & 'B' DIMENSIONS

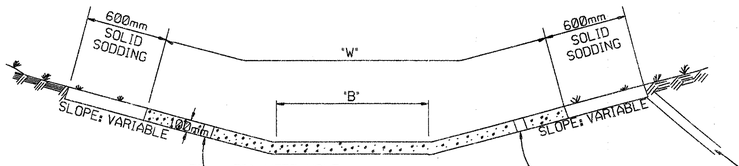

EXCAVATE TO NEAT LINES TO CONSTRUCT DITCH PAVING AND SOLID SODDING.

TYPE A

REFER TO TABULATION OF QUANTITIES
FOR 'W' DIMENSIONS

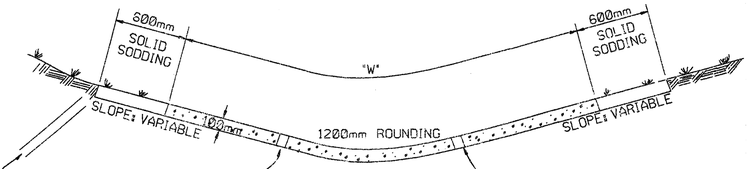

TYPE B

THE STEEL AND ADDITIONAL CONCRETE FOR THE WALLS SHALL NOT BE PAID FOR DIRECTLY, BUT SHALL BE CONSIDERED TO BE INCLUDED IN THE PRICE BID FOR 'CONCRETE DITCH PAVING.'

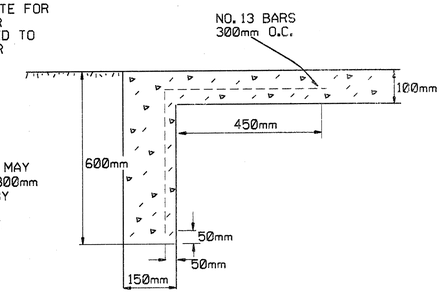

TOE WALL DEPTH MAY BE ALTERED TO 300mm WHEN DIRECTED BY THE ENGINEER IN ROCK EXCAVATION

TOE WALL DETAIL FOR
CONCRETE DITCH PAVING

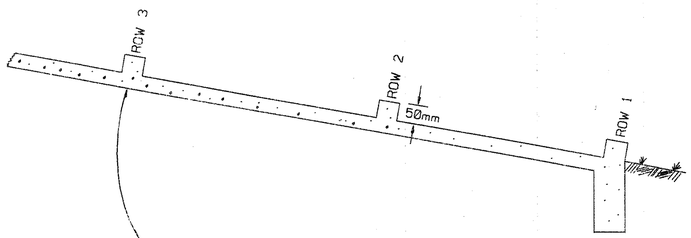

NUMBER OF ELEMENTS PER ROW VARIES WITH WIDTH OF PAVING SPECIFIED

ENERGY DISSIPATORS TO BE USED FOR THE ENTIRE LENGTH OF DITCH WHEN SLOPE OF DITCH PAVING EXCEEDS 7%. THE DISSIPATORS WILL NOT BE PAID FOR DIRECTLY, BUT SHALL BE CONSIDERED TO BE INCLUDED IN THE PRICE BID FOR CONCRETE DITCH PAVING.

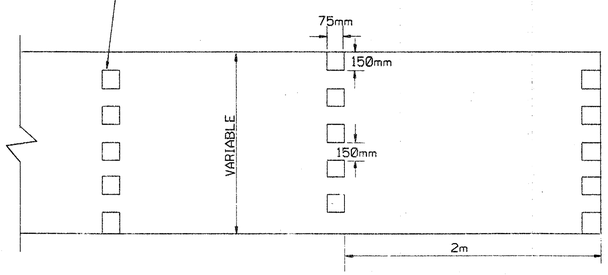

ENERGY DISSIPATORS
(NO SCALE)

GENERAL NOTES

1. THE FULL WIDTH OF EACH SECTION SHALL BE POURED MONOLITHICALLY.
2. TOE WALLS TO BE CONSTRUCTED FULL WIDTH AT EACH END OF DITCH PAVING, AND POURED MONOLITHICALLY.
3. SOLID SOD ALONG DITCH PAVING TO BE PLACED WITHIN 14 DAYS OF DITCH PAVING CONSTRUCTION.

ARKANSAS STATE HIGHWAY COMMISSION

CONCRETE DITCH PAVING

STANDARD DRAWING CDP-1 (M)

DATE	REVISION	DATE FILMED
4-3-97	REVISED STEEL BARS TO SOFT METRIC	4-3-97
7-20-95	CONVERTED TO METRIC	

MICROFILMED
NOV 01 2000

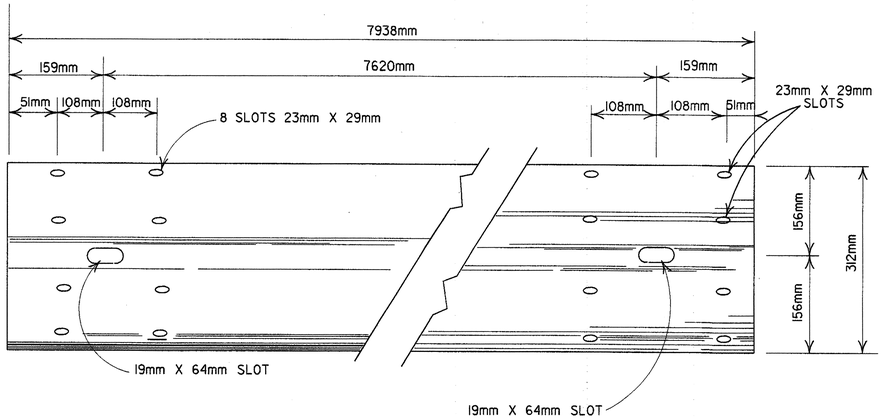

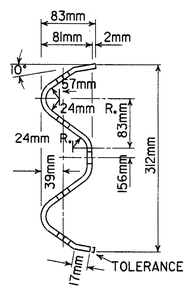

DETAIL OF W-BEAM GUARD RAIL

RAIL SECTION OF CLOSELY SIMILAR DIMENSIONS AND COMPARABLE STRENGTH MAY BE SUBSTITUTED IF APPROVED BY THE ENGINEER.

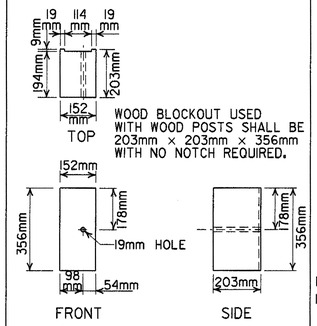

WOOD BLOCKOUT
(W-BEAM)

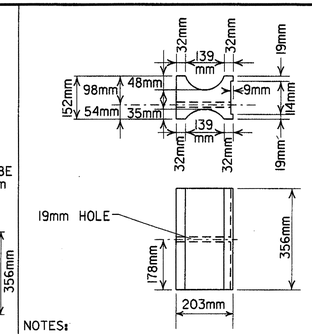

NOTES:
1. SIMILAR SHAPED PLASTIC BLOCKOUTS MAY BE USED AS LONG AS THEY MEET NCHRP-350 TEST LEVEL 3 SPECIFICATIONS.
2. DIMENSIONS ARE SUBJECT TO MANUFACTURERS TOLERANCES.

PLASTIC BLOCKOUT
(W-BEAM)

HOLES IN POSTS AND BLOCKS TO BE 19mm DIA.

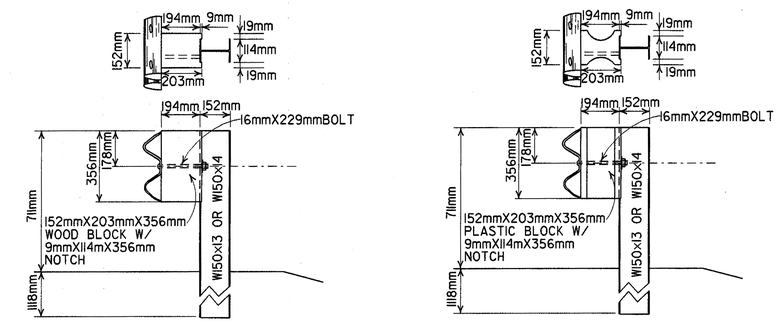

WOOD BLOCKOUT CONNECTIONS

PLASTIC BLOCKOUT CONNECTIONS

DETAILS OF STEEL LINE POST CONNECTIONS
(W-BEAM)

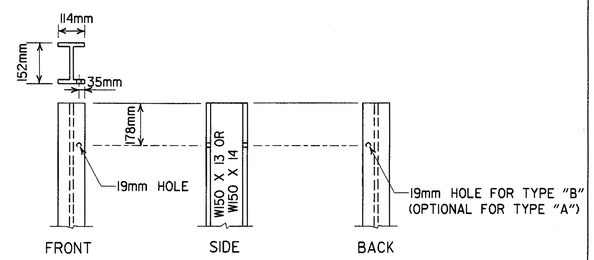

STEEL POST

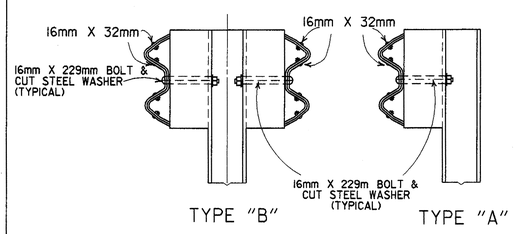

DETAILS OF STEEL LINE POST CONNECTIONS
(W-BEAM)

HOLES IN POSTS AND BLOCKS TO BE 19mm DIA.

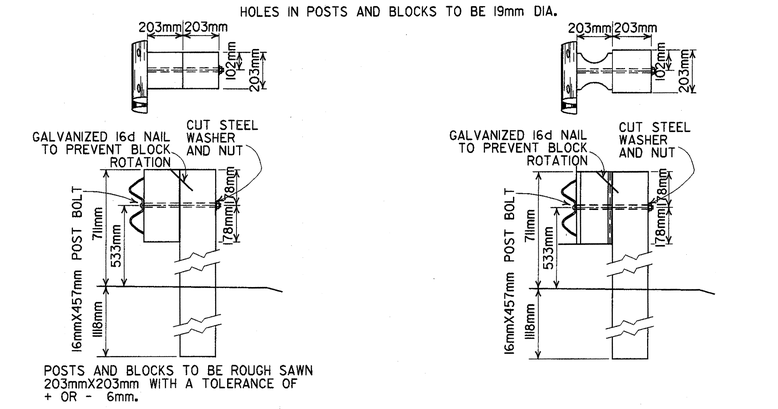

POSTS AND BLOCKS TO BE ROUGH SAWN 203mmX203mm WITH A TOLERANCE OF + OR - 6mm.

WOOD BLOCKOUT CONNECTIONS

PLASTIC BLOCKOUT CONNECTIONS

DETAILS OF WOOD LINE POST CONNECTIONS
(W-BEAM)

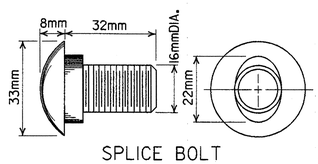

SPLICE BOLT
POST BOLT - SAME EXCEPT LENGTH

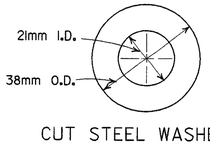

CUT STEEL WASHER

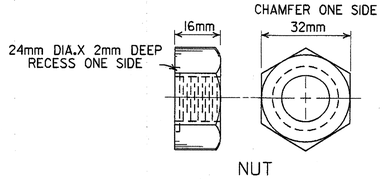

NUT

-GENERAL NOTES-

ALL BOLTS SHALL BE SUFFICIENT LENGTH TO EXTEND THROUGH THE FULL THICKNESS OF THE NUT AND NO MORE THAN 19mm BEYOND IT.

WHERE GUARD RAIL CONTINUES, THE INTERMEDIATE SECTIONS SHALL HAVE A POST SPACING OF 1905mm UNLESS OTHERWISE NOTED.

W-BEAM GUARD RAIL REPRESENTING INTERMEDIATE SECTIONS WILL BE MEASURED ALONG THE ROADWAY FACE FROM CENTERLINE OF POST TO CENTERLINE OF POST.

USE POSTS OF SAME MATERIAL FOR ENTIRE JOB. FOR EXTENSIONS OR MODIFICATION OF EXISTING GUARD RAIL, POSTS OF THE SAME TYPE AS THOSE EXISTING SHALL BE USED.

ANY BACKFILLING UNDER OR AROUND POST SHALL BE DAMP SAND THOROUGHLY TAMPED IN PLACE.

WOOD POSTS & BLOCKS SHALL BE EITHER DENSE NO.1 STRUCTURAL OR BETTER 9.7 f (1400 f) OR NO.1 1350 f SOUTHERN PINE.

CONTRACTOR SHALL HAVE THE OPTION OF USING WOOD BLOCKOUTS OR PLASTIC BLOCKOUTS, AS LONG AS BLOCKOUT USED MEETS NCHRP-350 TEST LEVEL 3 SPECIFICATIONS.

DATE	REVISION	DATE FILMED
3-30-00	REMOVED GUARD RAIL AT BRIDGE ENDS	
1-12-00	ADDED PLASTIC BLOCKOUT	
8-12-98	REV. BLOCKOUTS TO WOOD, DELETED CONC. POST & REV. GENERAL NOTE, DELETED DET. OF GUARD RAIL REPLACE. BEHIND CURB & DET. OF POST PLACE. IN SOLID ROCK, & ADDED DET. OF STEEL LINE POST CONNECTIONS. REMOVED BACK-UP PLATE & REVISED HOLES IN STEEL POST	
11-06-97	CHANGED DEPTH DIMENSION FOR STEEL POST	
4-3-97	REMOVED "LAP IN DIREDTION OF TRAFFIC" NOTE & PLACED ARROWS ON WASHERS	
10-18-96	REVISED WOOD POST NOTE	
7-20-95	CONVERTED TO METRIC	

ARKANSAS STATE HIGHWAY COMMISSION

GUARD RAIL DETAILS

STANDARD DRAWING GR-8(M)

MICROFILMED
NOV 01 2000

FILE MSTDGR8.dgn

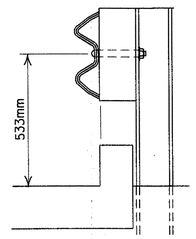

DETAIL OF
GUARD RAIL
PLACEMENT
BEHIND CURB

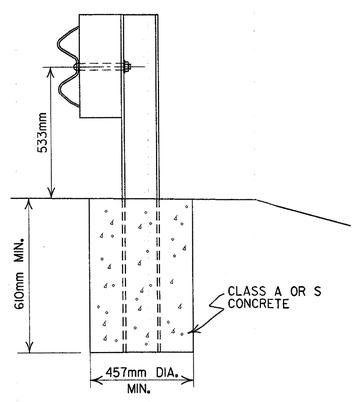

DETAIL OF
POST PLACEMENT
IN SOLID ROCK

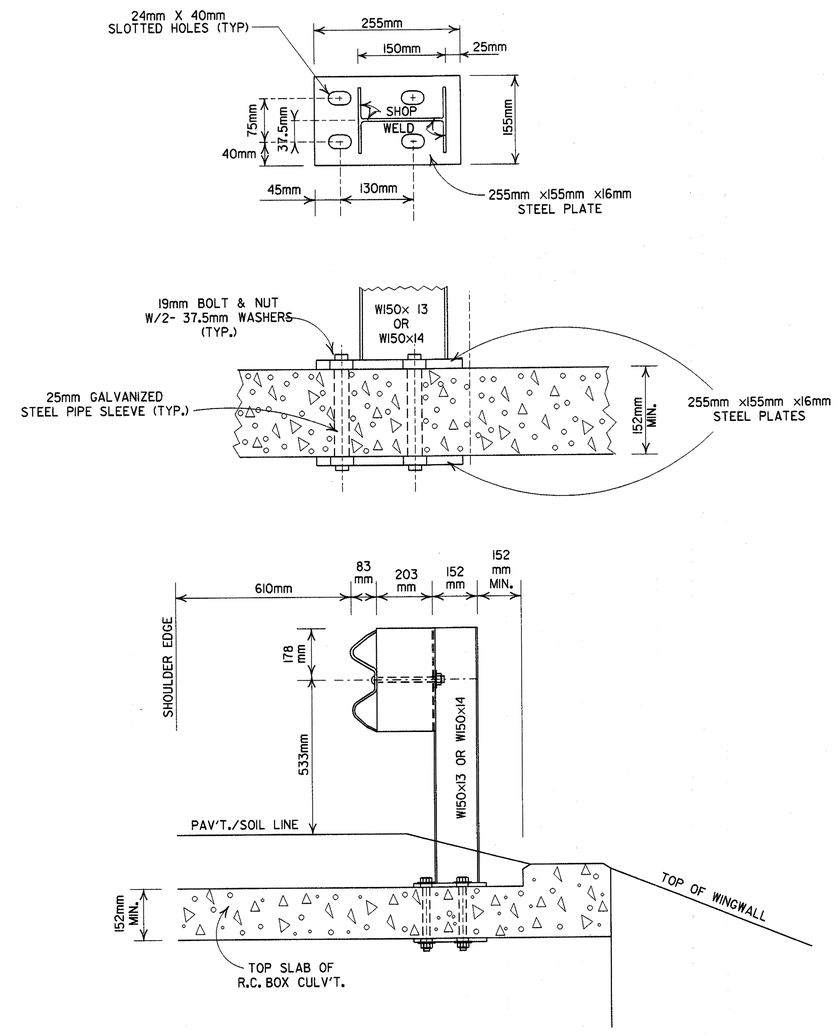

DETAILS OF GUARD RAIL CONNECTION
TO R.C. BOX CULVERTS

MICROFILMED
NOV 01 2000

DATE	REVISION	DATE FILMED
3-30-00	REMOVED CONCRETE INSERT ANCHOR ASSEMBLY	
8-12-98	CHANGED STEEL SPACER BLOCK TO WOOD BLOCKOUT & ADDED DETAILS OF GUARD RAIL CONNECTION TO R.C. BOX CULV'T. DELETED DET. OF STEEL LINE POST CONN.& ADDED DET. OF GUARD RAIL PLACE. BEHIND CURB & DET. OF POST PLACE. IN SOLID ROCK	
4-3-97	LABELED CUT STEEL WASHERS	
10-18-96	REVISED ASTM TO AASHTO	
4-26-96	TO MATCH DETAIL ON BRIDGE DRAWING 36525	
11-22-95	ADDED OPTIONAL HOLES	
7-20-95	CONVERTED TO METRIC	

ARKANSAS STATE HIGHWAY COMMISSION

GUARD RAIL DETAILS

STANDARD DRAWING GR-8A(M) METRIC

lere655 !! mstdgr8a.m

NOTE: TO BE INSTALLED ONLY AT LOCATIONS SHOWN ON PLANS.

NOTE : WIDENING FOR THE INSTALLATION OF GUARD RAIL END TERMINALS SHALL BE CONSTRUCTED ON A 1:6 TAPER MEASURED FROM THE OUTSIDE EDGE OF SHOULDER TO A POINT 3m AHEAD OF THE APPROACH END OR 3m BEHIND THE OFF END OF GUARD RAIL END TERMINALS. CROSS SLOPE OF THE WIDENED AREA FOR INSTALLATION OF GUARD RAIL END TERMINALS SHALL MATCH CROSS SLOPE OF AREA WIDENED FOR PLACEMENT OF GUARD RAIL.

** LAP OF GUARD RAIL SHALL BE AS SHOWN FOR A DISTANCE OF UP TO 60m, CHANGE TO LAP IN DIRECTION OF TRAVEL.

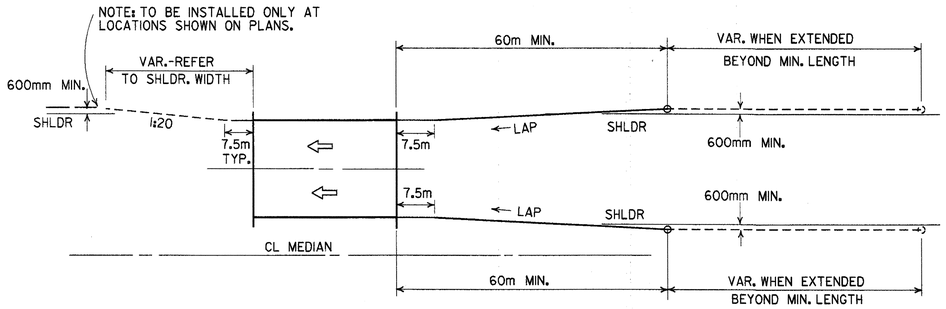

ONE-WAY TRAFFIC

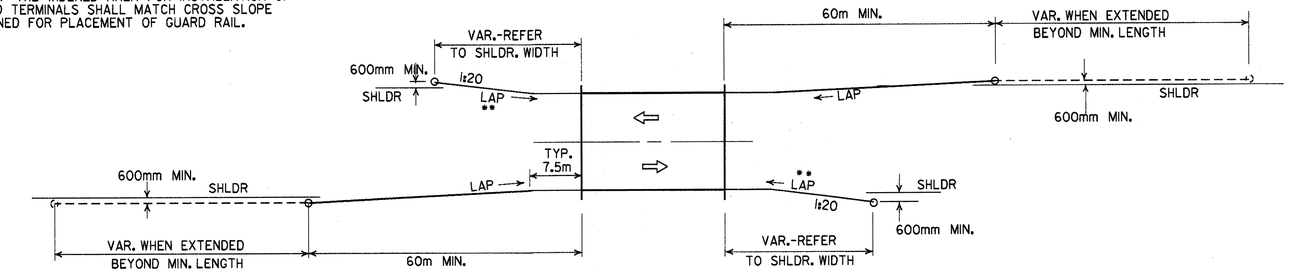

TWO-WAY TRAFFIC

METHODS OF INSTALLATION OF GUARD RAIL AT LESS THAN FULL SHOULDER WIDTH BRIDGES USING GUARD RAIL TERMINAL (TYPE 2)

NOTE : WIDENING FOR THE INSTALLATION OF GUARD RAIL END TERMINALS SHALL BE CONSTRUCTED ON A 1:6 TAPER MEASURED FROM THE OUTSIDE EDGE OF SHOULDER TO A POINT 3m AHEAD OF THE APPROACH END OR 3m BEHIND THE OFF END OF GUARD RAIL END TERMINALS. CROSS SLOPE OF THE WIDENED AREA FOR INSTALLATION OF GUARD RAIL END TERMINALS SHALL MATCH CROSS SLOPE OF AREA WIDENED FOR PLACEMENT OF GUARD RAIL.

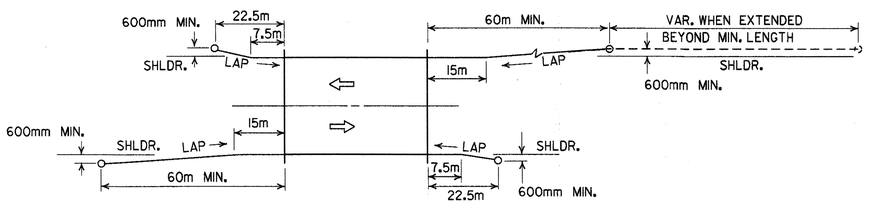

TWO-WAY TRAFFIC

NOTE: TO BE INSTALLED ONLY AT LOCATIONS SHOWN ON PLANS.

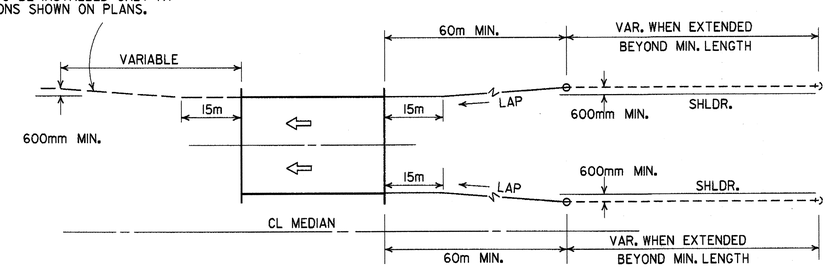

ONE-WAY TRAFFIC

METHOD OF INSTALLATION OF GUARD RAIL AT FULL SHOULDER WIDTH BRIDGES USING GUARD RAIL TERMINAL (TYPE 2)

NOTE: NORMAL SECTION TO BE WIDENED APPROX. 1.7m EACH SIDE TO SUPPORT GUARD RAIL.

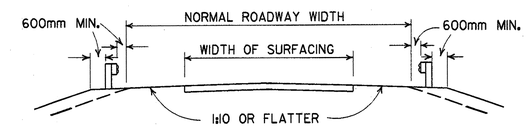

SECTION ON TANGENT

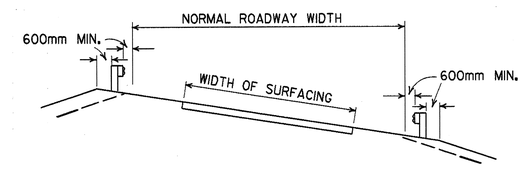

SECTION ON CURVE

DETAILS SHOWING POSITION OF GUARD RAIL ON HIGHWAY

NOTE : WIDENING FOR THE INSTALLATION OF GUARD RAIL END TERMINALS SHALL BE CONSTRUCTED ON A 1:6 TAPER MEASURED FROM THE OUTSIDE EDGE OF SHOULDER TO A POINT 3m AHEAD OF THE APPROACH END OR 3m BEHIND THE OFF END OF GUARD RAIL END TERMINALS. CROSS SLOPE OF THE WIDENED AREA FOR INSTALLATION OF GUARD RAIL END TERMINALS SHALL MATCH CROSS SLOPE OF AREA WIDENED FOR PLACEMENT OF GUARD RAIL.

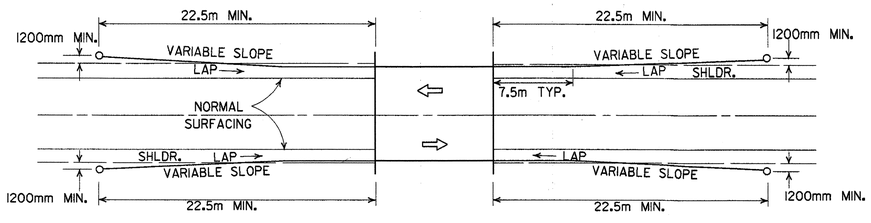

NOTE: WHEN 22.5m OF GUARD RAIL IS USED, USE SECTIONS 1, 3, & 4

METHOD OF INSTALLATION OF GUARD RAIL USING GUARD RAIL TERMINAL (TYPE 1) (FULL SHOULDER WIDTH OR LESS BRIDGES)

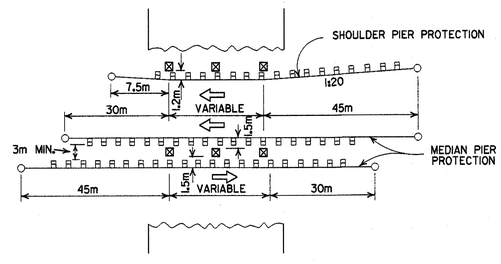

METHOD OF INSTALLATION OF GUARD RAIL AT FIXED OBSTACLE

MICROFILMED
NOV 01 2000

DATE	REVISION	DATE FILMED
1-12-00	ADDED CONSTRUCTION NOTE	1-12-00
6-26-97	REVISED LAYOUT	
7-20-95	CONVERTED TO METRIC	

ARKANSAS STATE HIGHWAY COMMISSION

GUARD RAIL DETAILS

STANDARD DRAWING GR-9(M) METRIC

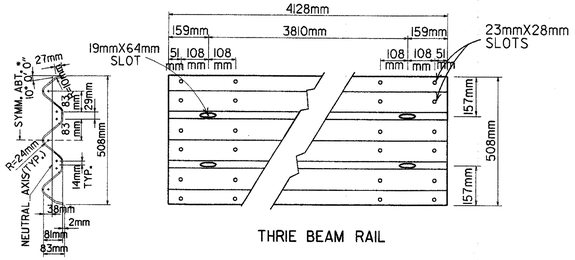

SECTION THRU THRIE BEAM RAIL

THRIE BEAM RAIL

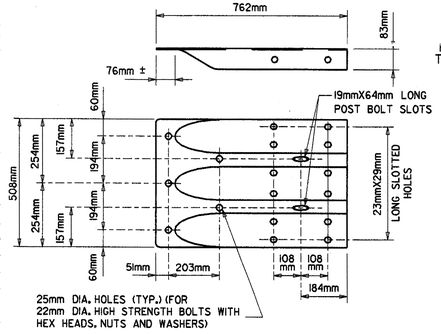

SPECIAL END SHOE

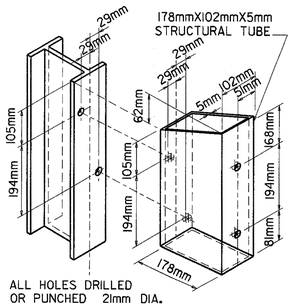

STRUCTURAL STEEL TUBING BLOCKOUT DETAIL

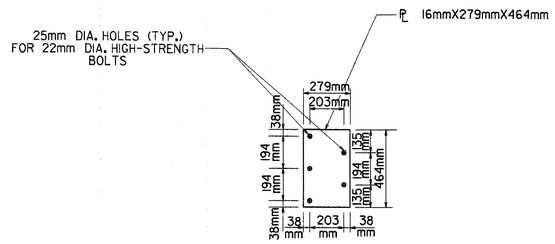

CONNECTOR PLATE

CONNECTOR PLATE SHALL BE AASHTO M270, GR. 36 AND SHALL BE GALVANIZED AFTER FABRICATION. GALVANIZING SHALL CONFORM TO SUBSECTION 807.19 OF THE STANDARD SPECIFICATIONS. CONNECTOR PLATE TO BE BOLTED TO SPECIAL END SHOE USING 22mm DIA. HIGH STRENGTH BOLTS, WITH THE HEADS PLACED ON THE TRAFFIC FACE. WASHERS SHALL BE USED UNDER THE HEAD AND NUT. BOLTS, NUTS AND WASHERS SHALL BE GALVANIZED AND SHALL CONFORM TO SUBSECTION 807.06.

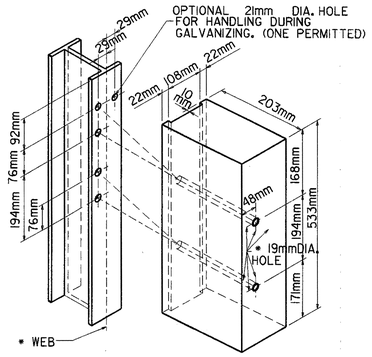

ALL HOLES 21mm DIAMETER EXCEPT AS NOTED

FOR STEEL POST & WOOD BLOCKOUTS HOLE PUNCHING DETAIL

NOTE: BLOCKS SHALL BE THE SAME TYPE THROUGHOUT THE PROJECT LIMITS.

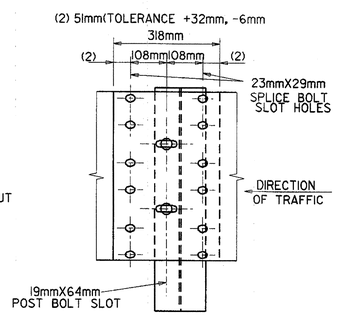

THRIE BEAM RAIL SPLICE AT POST

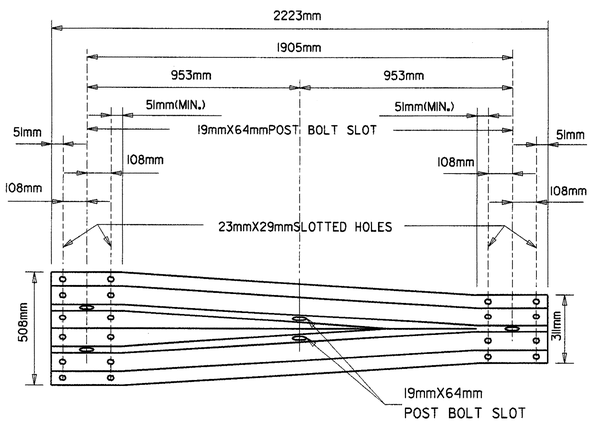

TRANSITION SECTION

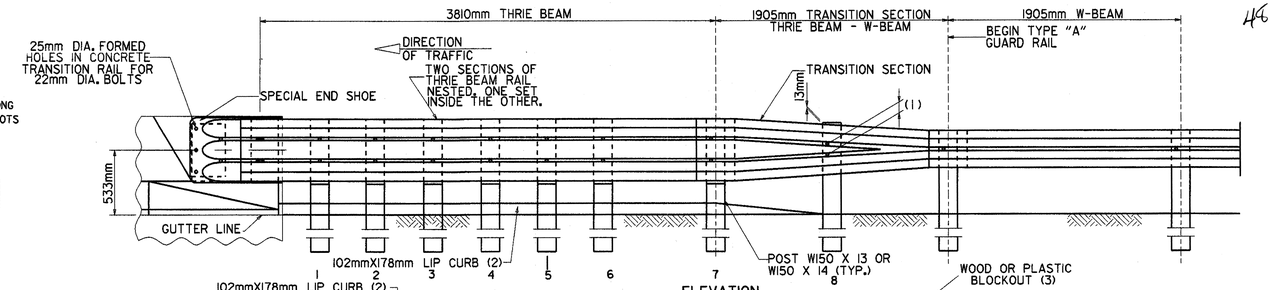

ELEVATION

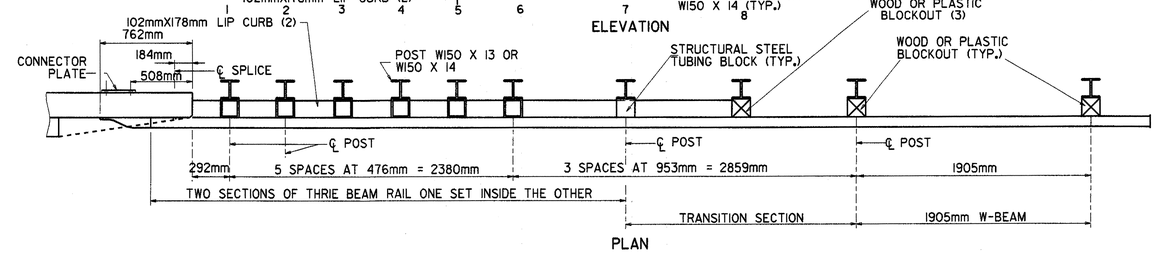

PLAN

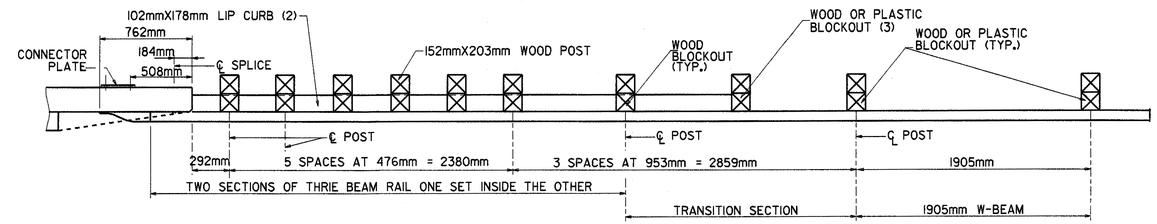

PLAN

(1) VERIFY BOLT SPACING FROM RAIL TRANSITION PRODUCER.
(2) LENGTH OF LIP CURB MAY VARY. SEE BRIDGE DRAWINGS FOR DETAILS.
(3) LENGTH OF BLOCKOUT ON POST 8 TO BE MODIFIED TO FIT RAIL WIDTH.

THRIE BEAM GUARD RAIL CONNECTION AT BRIDGE ENDS

GENERAL NOTES:

THE THRIE BEAM RAIL, SPECIAL END SHOE, AND THE TRANSITION SECTION SHALL BE MADE OF STEEL AND SHALL BE 12 GAGE. ZINC COATING SHALL BE TYPE I.

RAIL POSTS SHALL BE SET PERPENDICULAR TO THE ROADWAY PROFILE GRADE AND VERTICALLY IN CROSS SECTION.

ALL BOLTS SHALL BE SUFFICIENT LENGTH TO EXTEND THROUGH THE FULL THICKNESS OF THE NUT AND NO MORE THAN 19mm BEYOND IT.

ALL LAP SPLICES, INCLUDING SPECIAL END SHOES, SHALL BE MADE IN THE DIRECTION OF TRAFFIC.

WOOD POSTS & WOOD BLOCKS SHALL BE EITHER DENSE NO. 1 STRUCTURAL OR BETTER 9.7f (1400 f) OR NO. 1 1350 f SOUTHERN PINE.

REFER TO STD. DRWG. GR-10A FOR POST DETAILS.

DATE	REVISION	DATE FILM
6-29-00	MOVED DIMENSION LINES	
5-18-00	ADDED NOTE	
3-30-00	DRAWN & ISSUED	

ARKANSAS STATE HIGHWAY COMMISSION

GUARD RAIL DETAILS

METRIC D

STANDARD DRAWING GR-10(M)

MICROFILMED
NOV 01 2000