| DATE REVISED | DATE FILMED | DATE REVISED | DATE FILMED | FED. ROAD DIST. NO. | STATE | FED. AID PROJ. NO. | SHEET NO. | TOTAL SHEETS |
|---|---|---|---|---|---|---|---|---|
| | | | | 6 | ARK. | | | |
| | | | | JOB NO. | | 040518 | 145 | 270 |
| | | | | 07229 | | LAYOUT | 52396 | |

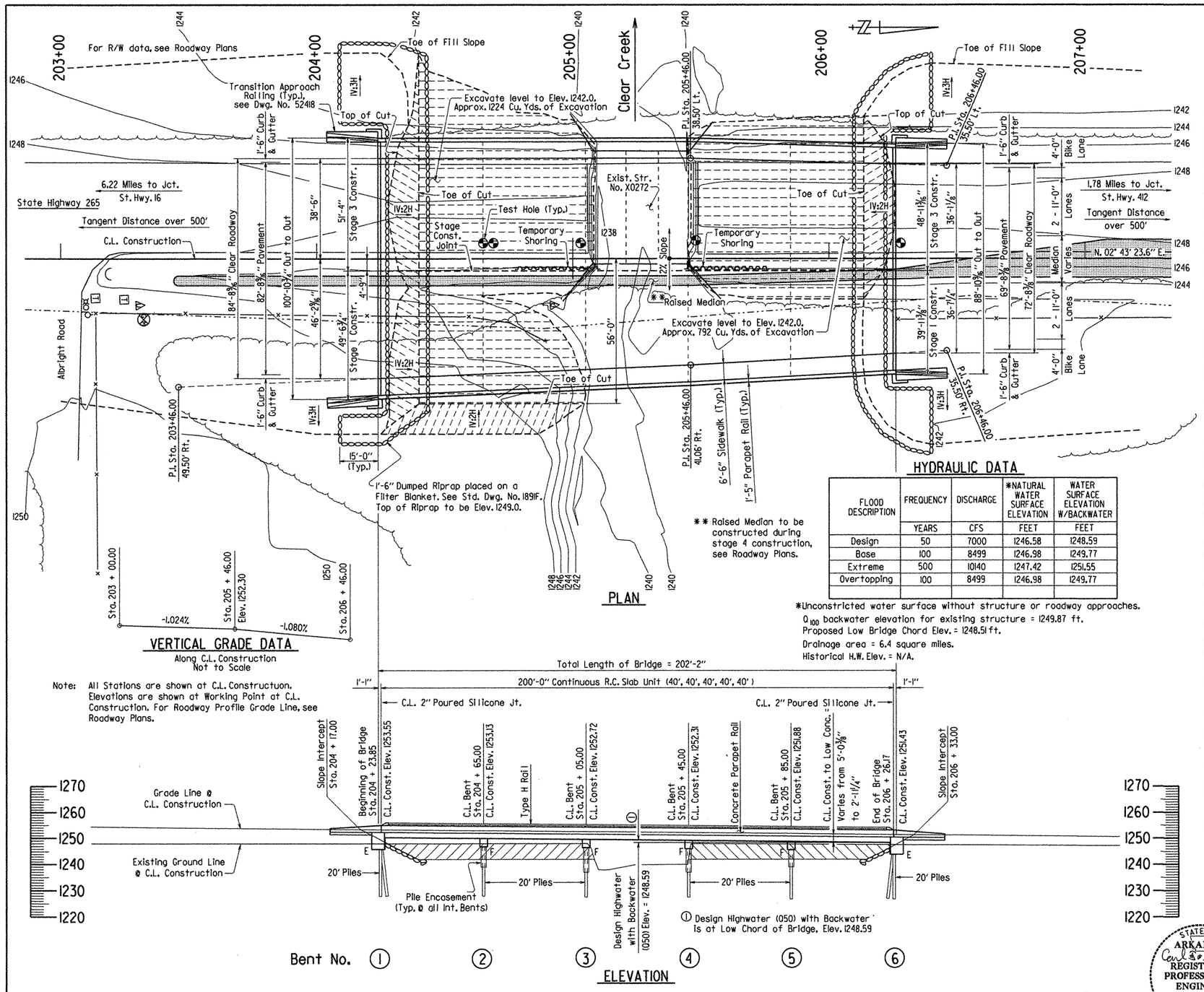


## HYDRAULIC DATA

| FLOOD DESCRIPTION | FREQUENCY | DISCHARGE | *NATURAL WATER SURFACE ELEVATION | WATER SURFACE ELEVATION W/BACKWATER |
|---|---|---|---|---|
| | YEARS | CFS | FEET | FEET |
| Design | 50 | 7000 | 1246.58 | 1248.59 |
| Base | 100 | 8499 | 1246.98 | 1249.77 |
| Extreme | 500 | 10140 | 1247.42 | 1251.55 |
| Overtopping | 100 | 8499 | 1246.98 | 1249.77 |
| | | | | |

*Unconstricted water surface without structure or roadway approaches.
$Q_{100}$ backwater elevation for existing structure = 1249.87 ft.
Proposed Low Bridge Chord Elev. = 1248.51 ft.
Drainage area = 6.4 square miles.
Historical H.W. Elev. = N/A.

Note: All Stations are shown at C.L. Constructuon. Elevations are shown at Working Point at C.L. Construction. For Roadway Profile Grade Line, see Roadway Plans.

## GENERAL NOTES

BENCH MARK: BM: 918 Chisled Sq. Center HW LT, 41.2' LT. of Sta. 205 + 25.77, Elev. 1247.12.

CONSTRUCTION SPECIFICATIONS: Arkansas State Highway and Transportation Department Standard Specifications for Highway Construction, (2003 edition), with applicable supplemental specifications and special provisions. Unless otherwise noted in the plans, Section and subsection numbers refer to the Construction Specifications.

DESIGN SPECIFICATIONS: AASHTO LRFD Bridge Design Specifications Fifth Edition (2010), with 2010 interim specifications.

LIVE LOADING: HL93 METHOD OF DESIGN: LRFD

SEISMIC ZONE: 1

MATERIALS AND STRENGTHS:

| | |
|---|---|
| Class S(AE) Concrete (superstructure) | f'c = 4,000 psi |
| Class S Concrete (substructure) | f'c = 3,5000 psi |
| Reinforcing Steel (AASHTO M31 or M53, Gr. 60) | fy = 60,000 psi |
| Structural Steel (AASHTO M270, Gr. 36) | Fy = 36,000 psi |

BORING LOGS: Boring logs may be obtained from the Programs and Contracts Division.

STEEL PILING: All piling in bents no. 1 & 6 shall be HP 12 X 53 piles and shall be driven with an approved air, steam or diesel hammer to a minimum safe bearing capacity of 50 tons per pile and driven into material designated as limestone on the boring legend. All piling in bents no. 2 - 5 shall be HP 14 X 73 piles and shall be driven with an approved air, steam, or diesel hammer to a minimum safe bearing capacity of 95 tons per pile and driven into material designated as limestone on the boring legend. Lengths shown are for estimating quantities and for use in determining payment for cut-off and build-up in accordance with the specifications. Piling in end bents shall be driven after embankment to bottom of cap is in place. On all piles the contractor shall use approved steel H-Pile driving points.

PREBORING: All piling in Bents 2 thru 5 shall be prebored a minimum of 3' into Limestone. After driving, prebored holes in rock shall be backfilled with Class S Concrete to top of rock. All remaining void spaces shall be backfilled as specified in subsection 805.08.

Prebored holes shall have a minimum diameter of 20". The Contractor shall be responsible for keeping prebored holes free of debris prior to backfilling, which may require the use of temporary casings or other methods. Preboring, backfill and any required casings shall not be paid for separately but shall be considered subsidiary to the item "Preboring".

PILE ENCASEMENT: Pile encasements shall be 27" ø and shall extend from the bottom of cap to Elevation 1239.0 for Bents 2 & 5, and to elevation 1237.0 for Bents 3 & 4. See Dwg. No. 14995A. Corrugated metal pipe shall not be used as encasement.

BRIDGE DECK: The concrete bridge deck shall be given a tine finish as specified for final finishing in subsection 802.19 for Class 5 Tined Bridge Roadway Surface Finish. Sidewalk and Median shall be given a Class 6, Broomed Finish.

DETAIL DRAWINGS:

| | DRAWING NO. |
|---|---|
| End Bents | 52398 - 52402 |
| Intermediate Bents | 52403 - 52410 |
| 200'-0" Cont. R.C. Slab unit | 52411 - 52417 |
| Transition Approach Railing | 52418 |
| Steel Piling & Pile Encasement | 14995A |

TEMPORARY SHORING: Temporary shoring shall be required for Stage 1 Construction. See SP Job 040518 "Shoring".

EXISTING STRUCTURE: Existing structure No. X0272 (log mile 6.22) is 44' wide and 38' long and consists a three barrel concrete box culvert with concrete wingwalls. The existing structure is located approximately 20 feet West of the proposed centerline alignment.

REMOVAL AND SALVAGE: The existing structure shall be removed in accordance with Section 202. All material from the existing structure shall become the property of the Contractor.

MAINTENANCE OF TRAFFIC: For Maintenance of Traffic, see Roadway Plans.

STATE OF ARKANSAS
Carl L. Fuselier
REGISTERED PROFESSIONAL ENGINEER
No. 7510
9/1/11
CARL L. FUSELIER
BRIDGE ENGINEER

# LAYOUT OF BRIDGE OVER CLEAR CREEK
## E. JOYCE BLVD.-CITY LIMITS (FAYETTEVILLE) (S)
## WASHINGTON COUNTY
ROUTE 265 SEC. 2

ARKANSAS STATE HIGHWAY COMMISSION
LITTLE ROCK, ARK.

DRAWN BY: MJT DATE: 03/23/11 FILENAME: B040518XI_LI.DGN
CHECKED BY: TMG DATE: 9/1/11 SCALE: 1" = 20'-0"
DESIGNED BY: DBS DATE: 1/27/11

BRIDGE NO. 07229 DRAWING NO. 52396

| DATE REVISED | DATE FILMED | DATE REVISED | DATE FILMED | FED. ROAD DIST. NO. | STATE | FED. AID PROJ. NO. | SHEET NO. | TOTAL SHEETS |
|---|---|---|---|---|---|---|---|---|
| | | | | 6 | ARK. | | | |
| | | | | JOB NO. | | 040518 | 146 | 270 |

(1) 07229 SOIL BORINGS & STAGE CONST. 52397

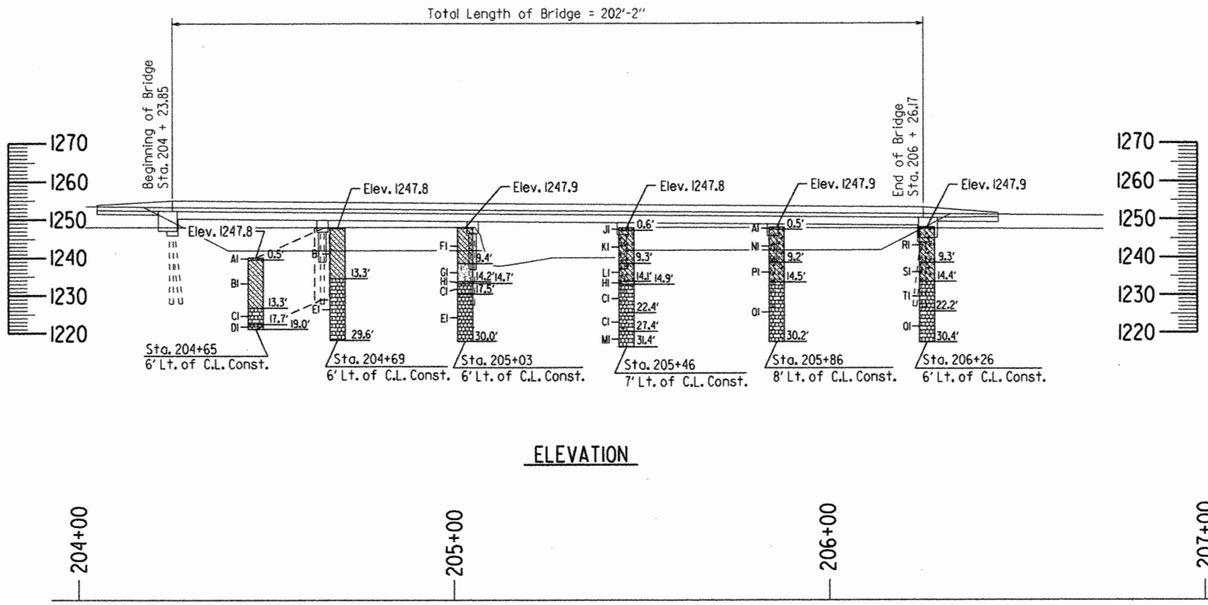


## ELEVATION

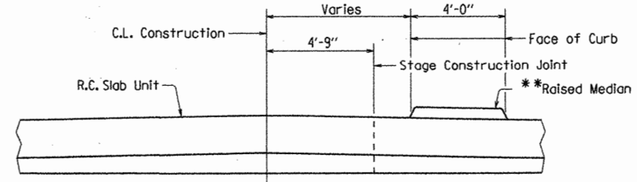


**Note: For additional information, see Roadway Plans, end bent details, and span details.

## STAGE 4 CONSTRUCTION

LOOKING AHEAD
NOT TO SCALE

*Note: Bolts for barrier stabilization are not required.

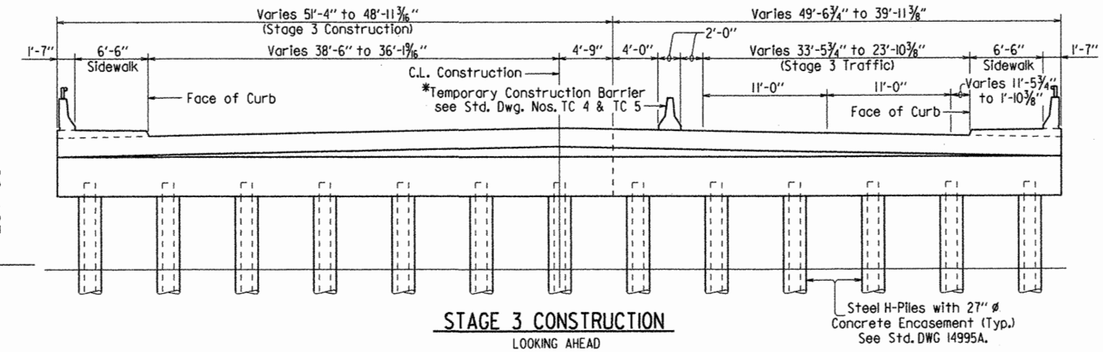


## STAGE 3 CONSTRUCTION

LOOKING AHEAD
NOT TO SCALE

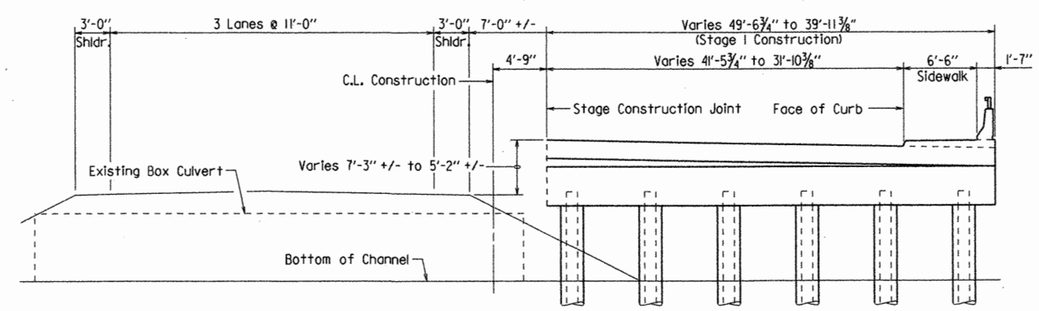


Note: Portions of existing culvert may require removal for Stage 1 Construction.

## STAGE 1 CONSTRUCTION

LOOKING AHEAD
NOT TO SCALE

## BORING LEGEND

Ai-Asphalt Pavement (0 - 0.5')
Bi-Moist, Soft, Brown Sandy Clay with some Limestone Fragments
Ci-Hard, Gray Fractured Limestone
Di-Hard, Gray Limestone
Ei-Hard, Gray Limestone
Fi-Moist, Medium Stiff, Brown Sandy Clay with some Limestone Fragments
Gi-Wet, Very Loose, Silty Sand with some Limestone Fragments
Hi-Wet, Very Dense, Gray Sand with Limestone Fragments
Ji-Asphalt Pavement (0 - 0.6')
Ki-Moist, Medium Stiff, Reddish Brown Gravelly (Cherty Limestone Fragments) Clay with Sand
Li-Moist, Soft, Reddish Brown to Brown Gravelly (Chert Fragments) Clay with Sand
Mi-Hard, Gray Limestone with some Fractured Seams
Ni-Moist, Stiff, Brown Gravelly (Cherty Limestone Fragments) Clay with Sand
Pi-Wet, Stiff, Brown Gravelly (Cherty Limestone Fragments) Clay with Sand
Qi-Hard, Gray Fractured Limestone with some Chert Seams
Ri-Moist, Very Stiff, Reddish Brown Gravelly (Cherty Limestone Fragments) Clay with Sand
Si-Wet, Medium Stiff, Brown Gravelly (Cherty Limestone Fragments) Clay with Sand
Ti-Hard, Gray Fractured Cherty Limestone

## "N" VALUES

Sta. 204+65 - 6' Lt. of C.L. Constr.
4.5- 5.5, N=4
9.5- 10.5, N=4

Sta. 204+69 - 6' Lt. of C.L. Constr.

Sta. 205+03 - 6' Lt. of C.L. Constr.
4.9- 5.9, N=8
9.9- 10.9, N=2
14.4- 14.7, N=60(4")

Sta. 205+46 - 7' Lt. of C.L. Constr.
4.8- 5.8, N=8
9.8- 10.8, N=4
14.8- 15.0, N=60(2")

Sta. 205+86 - 8' Lt. of C.L. Constr.
5.0- 6.0, N=12
10.0- 11.0, N=9
14.5- 14.6, N=60(1")

Sta. 206+26 - 6' Lt. of C.L. Constr.
4.9- 5.9, N=24
9.9- 10.9, N=8
14.4- 14.7, N=60(4")

STATE OF ARKANSAS
REGISTERED PROFESSIONAL ENGINEER
No. 7510
7/1/11
CARL J. FUSELIER

BRIDGE ENGINEER

# SOIL BORINGS & STAGE CONSTRUCTION
# CLEAR CREEK
# E. JOYCE BLVD.-CITY LIMITS (FAYETTEVILLE) (S)
# WASHINGTON COUNTY

ROUTE 265 SEC. 2

ARKANSAS STATE HIGHWAY COMMISSION

LITTLE ROCK, ARK.

| | | | | | |
|---|---|---|---|---|---|
| DRAWN BY: | MJT | DATE: | 03/23/11 | FILENAME: | B040518XI_L1.DGN |
| CHECKED BY: | TMG | DATE: | 8/30/11 | SCALE: | 1" = 20'-0" |
| DESIGNED BY: | DBS | DATE: | 1/27/11 | | |

BRIDGE NO. 07229 DRAWING NO. 52397

| DATE REVISED | DATE FILMED | DATE REVISED | DATE FILMED | FED. ROAD DIST. NO. | STATE | FED. AID PROJ. NO. | SHEET NO. | TOTAL SHEETS |
|---|---|---|---|---|---|---|---|---|
| | | | | 6 | ARK. | | | |
| | | | | JOB NO. | | 040518 | 147 | 270 |
| | | | | ① 07299 | | END BENT 1 | 52398 | |

Note: Class I Protective surface Treatment shall be applied to the Roadway Face and Top of End Bent Rail, Top of Sidewalk, and to the Top of the Backwall.

Note: For "SECTION A-A, B-B, C-C, & D-D", see Dwg. No. 52402

① Beginning of Bridge to C. L. Joint

Working Point for 1V:2H Slope

See Dwg. 52402 for "CONSTRUCTION JOINT DETAIL"

Note: For "Sidewalk Curb Detail" & "Sidewalk Detail", see Dwg. No. 52402

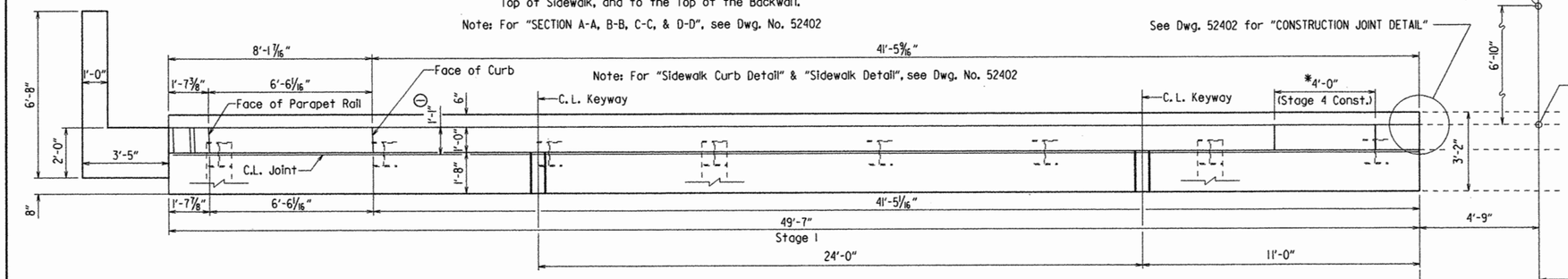


PLAN

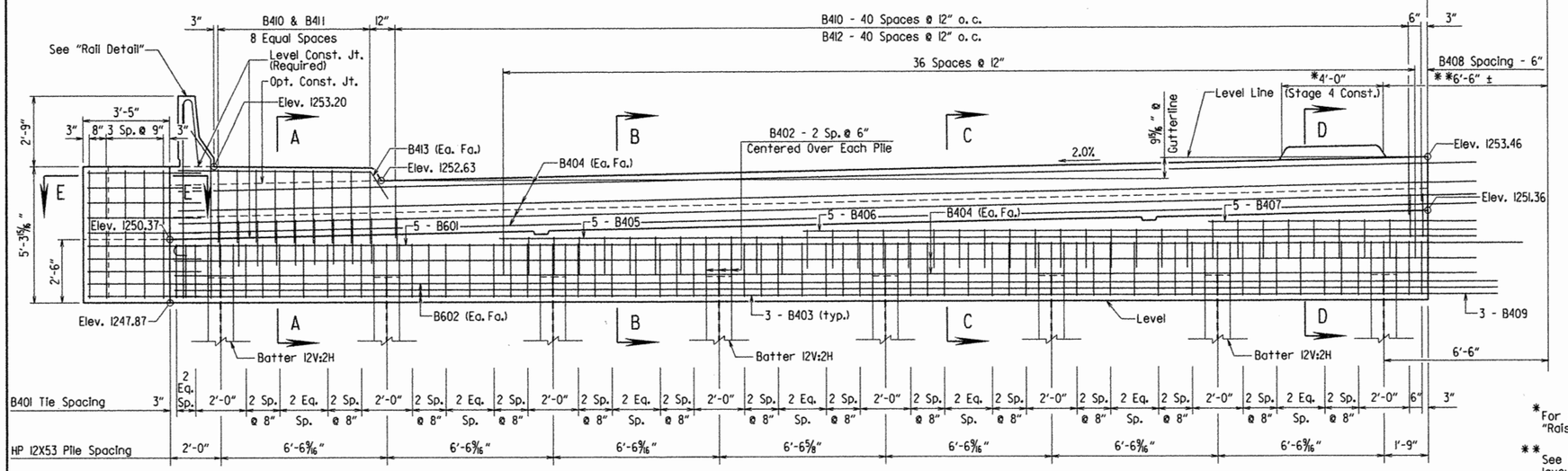


ELEVATION
LOOKING BACK

Lap Splice Lengths

#4 Bars = 1'-9"
#6 Bars = 3'-7" (Top)
2'-7" (Bottom)

*For Stage 4 Construction, see "Raised Median Detail" Dwg. No. 52402.

**See Roadway plans regarding layout of Raised Median.

Note: M401E bars shall be epoxy coated and shall be measured and paid for as "Epoxy Coated Reinforcing Steel (Grade 60)."

## BAR LIST - STAGE I

| MARK | NO. REQ'D. | LENGTH | "A" | "B" | P.D. |
|---|---|---|---|---|---|
| B401 | 54 | 10'-4" | 2'-10" | 2'-2" | 2" |
| B402 | 24 | 7'-0" | 2'-10" | 2'-2" | 2" |
| B403 | 21 | 5'-6" | - | - | Str. |
| B404 | 12 | 51'-4" | - | - | Str. |
| B405 | 5 | 38'-7" | - | - | Str. |
| B406 | 5 | 26'-7" | - | - | Str. |
| B407 | 5 | 10'-7" | - | - | Str. |
| B408 | 37 | 5'-8" | 2'-10" | 1'-6" | 2" |
| B409 | 3 | 3'-0" | - | - | Str. |
| B410 | 51 | 4'-8" | 1'-2" | 1'-10" | 2" |
| B411 | 9 | 5'-2" | 8" | 2'-4" | 2" |
| B412 | 42 | 4'-2" | 8" | 1'-10" | 2" |
| B413 | 2 | 9'-0" | 7'-7" | 1'-6" | 2" |
| W401 | 23 | 5'-0" | - | - | Str. |
| B601 | 5 | 53'-10" | 53'-2" | 6" | 4½" |
| B602 | 6 | 52'-2" | - | - | Str. |
| W601 | 10 | 9'-4" | 4'-9" | 4'-9" | 4½" |
| W602 | 10 | 10'-1" | 6'-4" | 3'-11" | 4½" |
| W603 | 10 | 8'-1" | 3'-6" | 4'-9" | 4½" |
| R401 | 2 | 6'-5" | 1'-2" | 5'-3" | 2" |
| R402 | 2 | 7'-9" | - | - | Str. |
| R403 | 2 | 3'-11" | 2'-6" | 1'-0" | 3" |
| R404 | 5 | 8" | - | - | Str. |
| M401E | 4 | 2'-10" | 2'-0" | 9½" | 2" |

BENDING DIAGRAMS

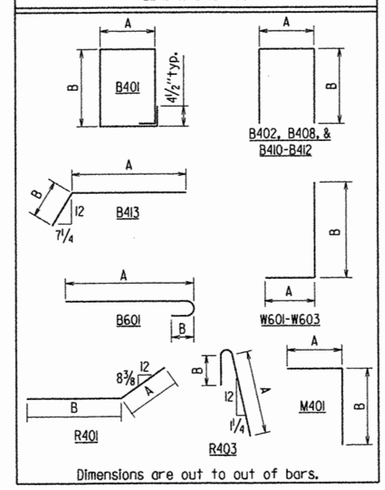


Dimensions are out to out of bars.

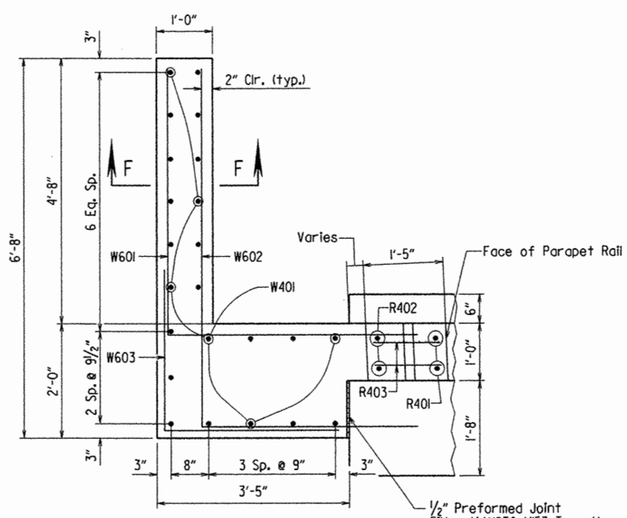


SECTION E-E
¾" = 1'-0"

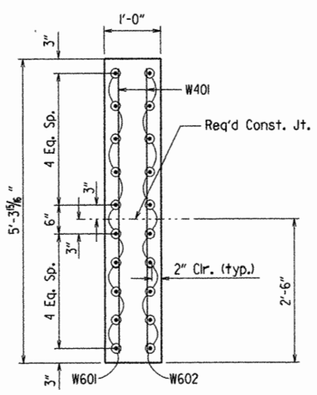


SECTION F-F
¾" = 1'-0"

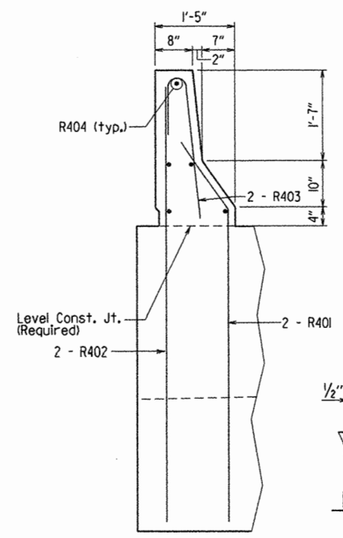


RAIL DETAIL
¾" = 1'-0"

⅛" Thick Bearing Pad glued to cap. See Span Details for additional details and notes.

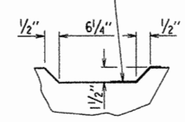


KEYWAY DETAIL
No Scale

GENERAL NOTES

All Concrete shall be Class "S" and shall be poured in the dry with a min. 28-day compression strength f'c = 3500 psi. All exposed corners to be chamfered ¾" unless otherwise noted.

All Reinforcing steel shall conform to AASHTO M31 or M53, Grade 60.

Concrete in Backwall shall not be poured before all deck span concrete has been poured.

For additional information, See Layout.

STATE OF ARKANSAS
Carl J. Fuselier
REGISTERED PROFESSIONAL ENGINEER
No. 7510
9/1/11
CARL J. FUSELIER

BRIDGE ENGINEER

# DETAILS OF END BENT I
## STAGE I

ROUTE 265 SEC. 2

ARKANSAS STATE HIGHWAY COMMISSION

LITTLE ROCK, ARK.

| | | | | | |
|---|---|---|---|---|---|
| DRAWN BY: TMG | DATE: 7/18/2011 | FILENAME: B040518X1_BI.DGN | | | |
| CHECKED BY: BEF | DATE: 8/17/11 | SCALE: ⅛" = 1'-0" OR AS NOTED | | | |
| DESIGNED BY: TMG | DATE: 5/11 | | | | |

BRIDGE NO. 07229 DRAWING NO. 52398

| DATE REVISED | DATE FILMED | DATE REVISED | DATE FILMED | FED. ROAD DIST. NO. | STATE | FED. AID PROJ. NO. | SHEET NO. | TOTAL SHEETS |
|---|---|---|---|---|---|---|---|---|
| | | | | 6 | ARK. | | | |
| | | | | JOB NO. | | 040518 | 148 | 270 |
| | | | | ① 07229 | | END BENT 1 | 52399 | |

Note: Class I Protective surface Treatment shall be applied to the Roadway Face and Top of End Bent Rail, Top of Sidewalk, and to the Top of the Backwall.

Note: For "SECTION A-A, B-B, C-C, & D-D", see Dwg. No. 52402

① Beginning of Bridge to C. L. Joint

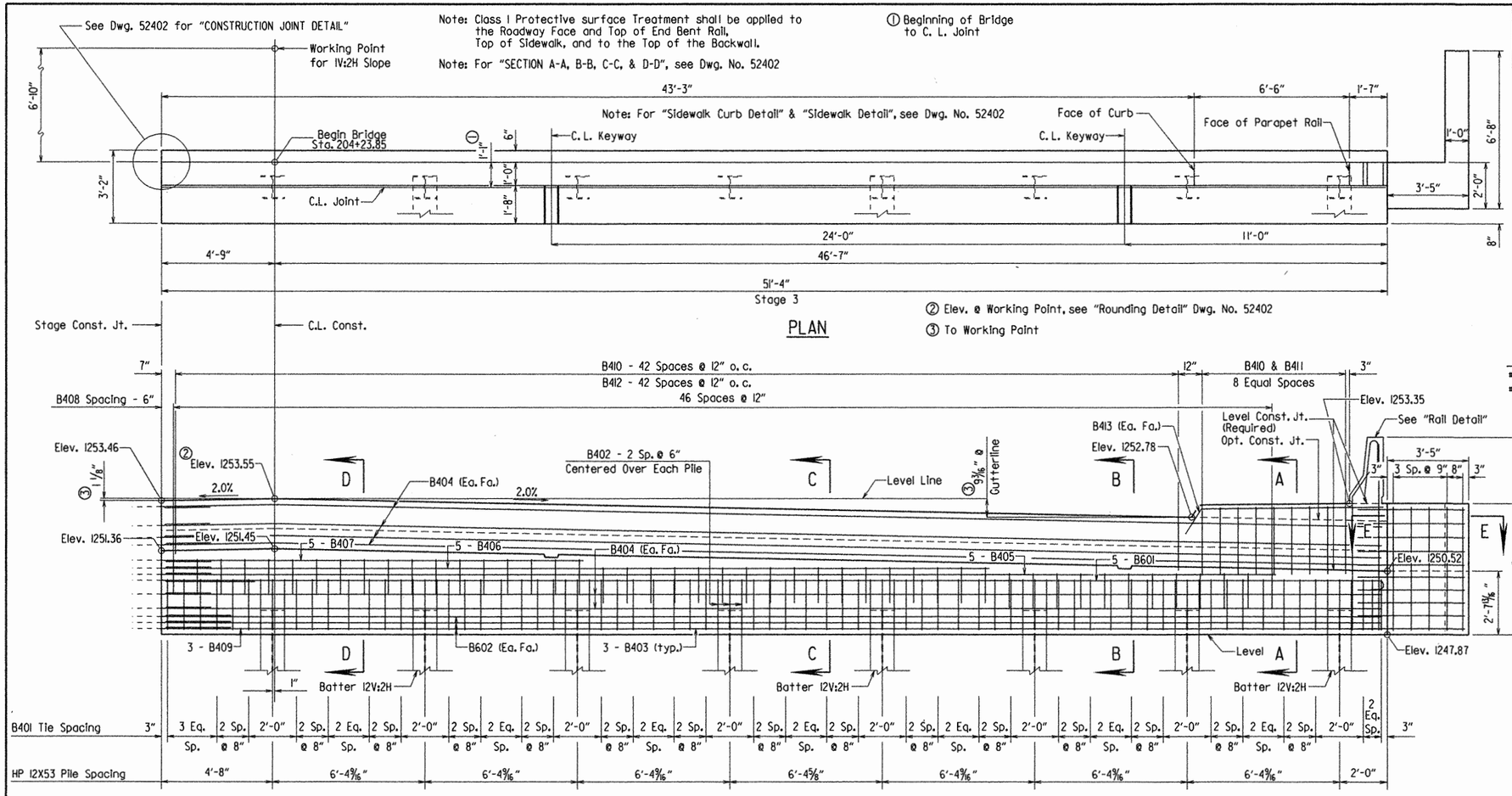


PLAN

ELEVATION
LOOKING BACK

Lap Splice Lengths
#4 Bars = 1'-9"
#6 Bars = 3'-7" (Top)
2'-7" (Bottom)

## BAR LIST - STAGE 3

| MARK | NO. REQ'D. | LENGTH | "A" | "B" | P.D. |
|---|---|---|---|---|---|
| B401 | 58 | 10'-4" | 2'-10" | 2'-2" | 2" |
| B402 | 24 | 7'-0" | 2'-10" | 2'-2" | 2" |
| B403 | 21 | 5'-4" | - | - | Str. |
| B404 | 12 | 51'-0" | - | - | Str. |
| B405 | 5 | 48'-6" | - | - | Str. |
| B406 | 5 | 34'-6" | - | - | Str. |
| B407 | 5 | 17'-6" | - | - | Str. |
| B408 | 47 | 5'-8" | 2'-10" | 1'-6" | 2" |
| B409 | 3 | 4'-0" | - | - | Str. |
| B410 | 52 | 4'-8" | 1'-2" | 1'-11" | 2" |
| B411 | 9 | 5'-2" | 8" | 2'-4" | 2" |
| B412 | 42 | 4'-2" | 8" | 1'-10" | 2" |
| B413 | 2 | 9'-0" | 7'-7" | 1'-6" | 2" |
| W401 | 23 | 5'-0" | - | - | Str. |
| B601 | 5 | 51'-8" | 51'-0" | 6" | 4½" |
| B602 | 6 | 51'-0" | - | - | Str. |
| W601 | 10 | 9'-4" | 4'-9" | 4'-9" | 4½" |
| W602 | 10 | 10'-1" | 6'-4" | 3'-11" | 4½" |
| W603 | 10 | 8'-1" | 3'-6" | 4'-9" | 4½" |
| R401 | 2 | 6'-6" | 1'-2" | 5'-4" | 2" |
| R402 | 2 | 7'-10" | - | - | Str. |
| R403 | 2 | 3'-11" | 2'-6" | 1'-0" | 3" |
| R404 | 5 | 8" | - | - | Str. |

BENDING DIAGRAMS

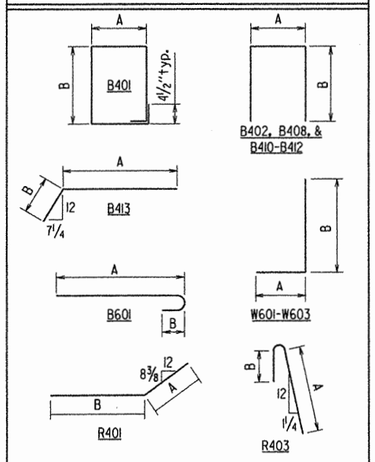


Dimensions are out to out of bars.

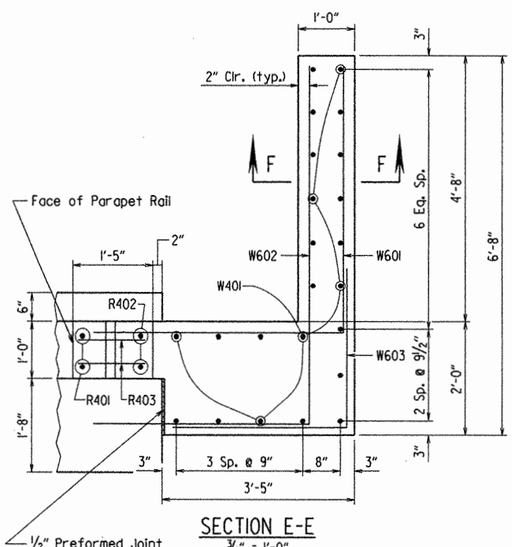


SECTION E-E
¾" = 1'-0"

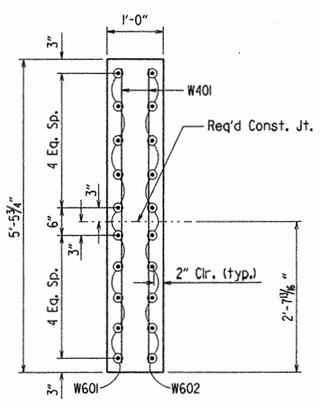


SECTION F-F
¾" = 1'-0"

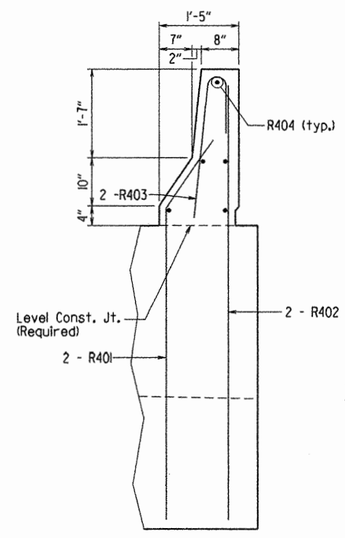


RAIL DETAIL
¾" = 1'-0"

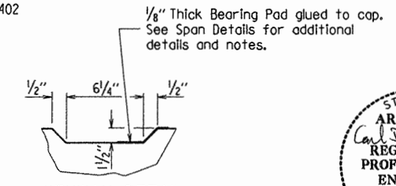


KEYWAY DETAIL
No Scale

GENERAL NOTES

All Concrete shall be Class "S" and shall be poured in the dry with a min. 28-day compression strength f'c = 3500 psi. All exposed corners to be chamfered ¾" unless otherwise noted.

All Reinforcing steel shall conform to AASHTO M31 or M53, Grade 60.

Concrete in Backwall shall not be poured before all deck span concrete has been poured.

For additional information, See Layout.

STATE OF ARKANSAS
Carl L. Fuselier
REGISTERED PROFESSIONAL ENGINEER
No. 7510
7/1/11
CARL L. FUSELIER

BRIDGE ENGINEER

# DETAILS OF END BENT 1
## STAGE 3

ROUTE 265 SEC. 2

ARKANSAS STATE HIGHWAY COMMISSION

LITTLE ROCK, ARK.

| | | | |
|---|---|---|---|
| DRAWN BY: TMG | DATE: 7/18/2011 | FILENAME: | B040518X1_B1.DGN |
| CHECKED BY: BEF | DATE: 8/17/11 | SCALE: | ⅜" = 1'-0" OR AS NOTED |
| DESIGNED BY: TMG | DATE: 5/11 | | |

BRIDGE NO. 07229 DRAWING NO. 52399

| DATE REVISED | DATE FILMED | DATE REVISED | DATE FILMED | FED. ROAD DIST. NO. | STATE | FED. AID PROJ. NO. | SHEET NO. | TOTAL SHEETS |
|---|---|---|---|---|---|---|---|---|
| | | | | 6 | ARK. | | | |
| | | | | JOB NO. | | 040518 | 149 | 270 |
| | | | | ① | 07229 | END BENT 6 | 52400 | |

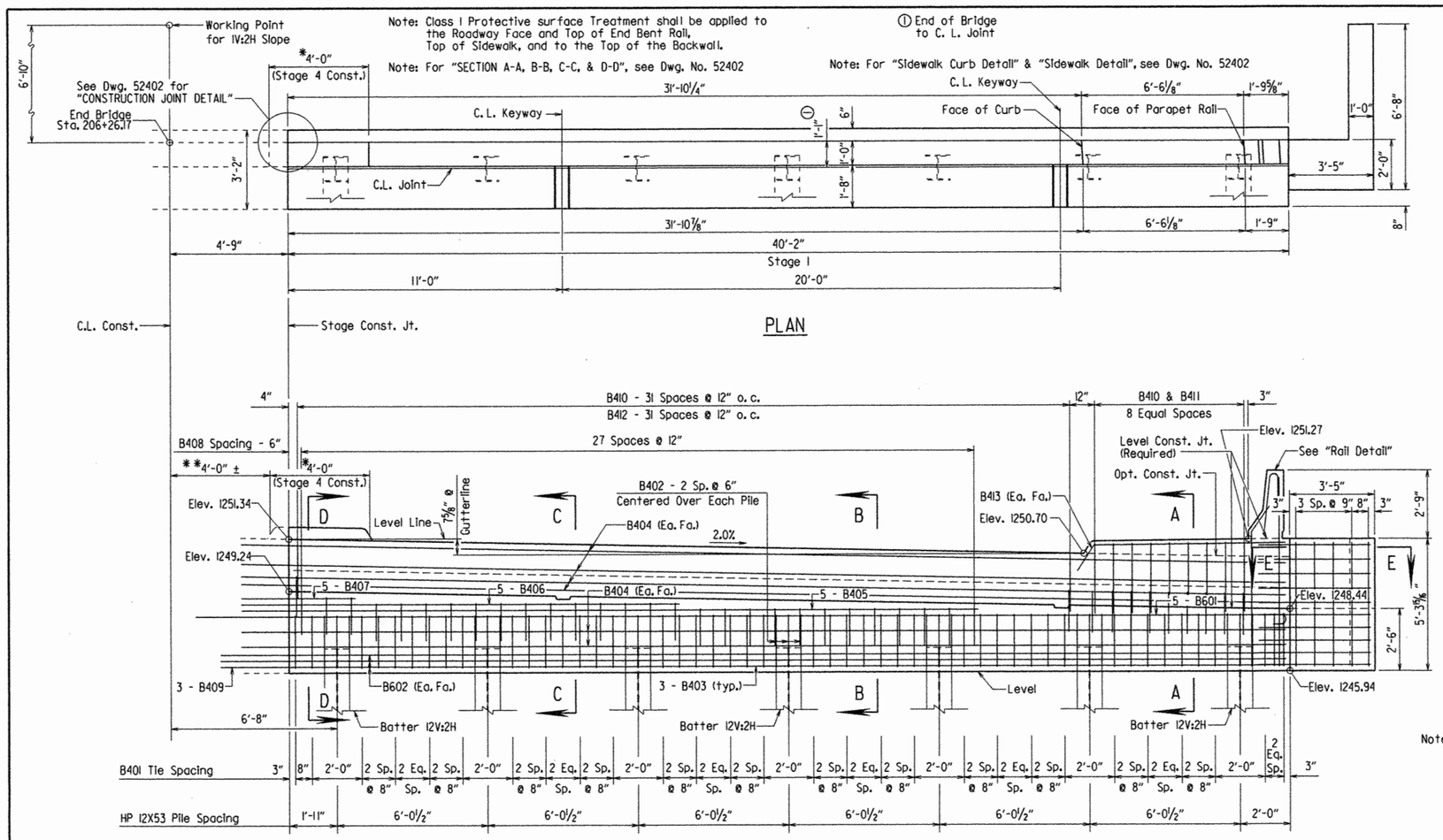


ELEVATION
LOOKING AHEAD

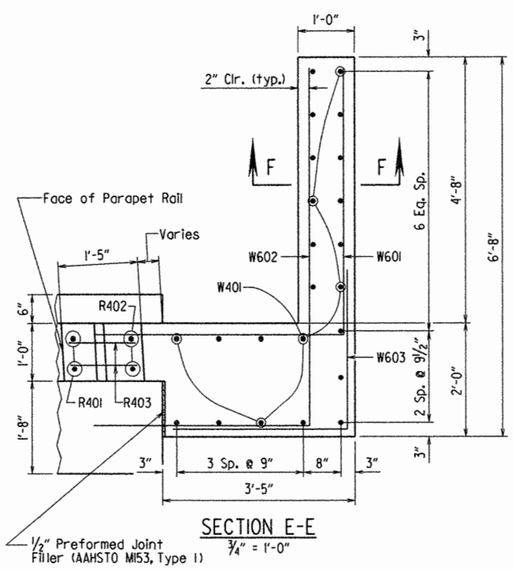


SECTION E-E
¾" = 1'-0"

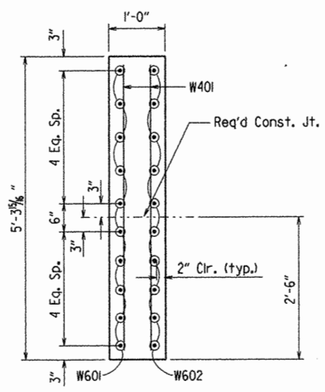


SECTION F-F
¾" = 1'-0"

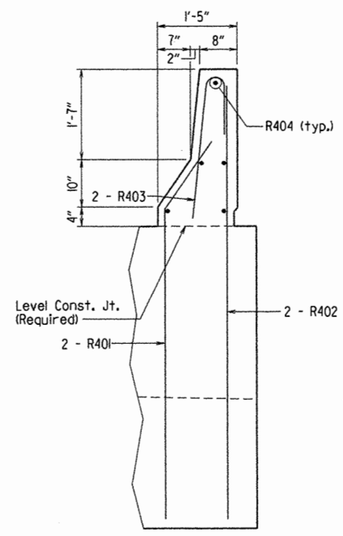


RAIL DETAIL
¾" = 1'-0"

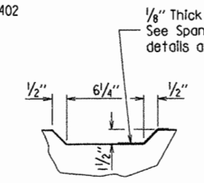


KEYWAY DETAIL
No Scale

Lap Splice Lengths
#4 Bars = 1'-9"
#6 Bars = 3'-7" (Top)
2'-7" (Bottom)

*For Stage 4 Construction, see "Raised Median Detail" Dwg. No. 52402.

**See Roadway plans regarding layout of Raised Median.

Note: M401E bars shall be epoxy coated and shall be measured and paid for as "Epoxy Coated Reinforcing Steel (Grade 60)."

GENERAL NOTES

All Concrete shall be Class "S" and shall be poured in the dry with a min. 28-day compression strength f'c = 3500 psi. All exposed corners to be chamfered ¾" unless otherwise noted.

All Reinforcing steel shall conform to AASHTO M31 or M53, Grade 60.

Concrete in Backwall shall not be poured before all deck span concrete has been poured.

For additional information, See Layout.

## BAR LIST - STAGE I

| MARK | NO. REQ'D. | LENGTH | "A" | "B" | P.D. |
|---|---|---|---|---|---|
| B401 | 47 | 10'-4" | 2'-10" | 2'-2" | 2" |
| B402 | 21 | 7'-0" | 2'-10" | 2'-2" | 2" |
| B403 | 18 | 5'-0" | - | - | Str. |
| B404 | 12 | 41'-11" | - | - | Str. |
| B405 | 5 | 29'-7" | - | - | Str. |
| B406 | 5 | 17'-7" | - | - | Str. |
| B407 | 5 | 4'-7" | - | - | Str. |
| B408 | 28 | 5'-8" | 2'-10" | 1'-6" | 2" |
| B409 | 3 | 3'-2" | - | - | Str. |
| B410 | 41 | 4'-8" | 1'-2" | 1'-10" | 2" |
| B411 | 9 | 5'-2" | 8" | 2'-4" | 2" |
| B412 | 32 | 4'-2" | 8" | 1'-10" | 2" |
| B413 | 2 | 9'-0" | 7'-7" | 1'-6" | 2" |
| W401 | 23 | 5'-0" | - | - | Str. |
| B601 | 5 | 44'-5" | 43'-9" | 6" | 4½" |
| B602 | 6 | 42'-9" | - | - | Str. |
| W601 | 10 | 9'-4" | 4'-9" | 4'-9" | 4½" |
| W602 | 10 | 10'-1" | 6'-4" | 3'-11" | 4½" |
| W603 | 10 | 8'-1" | 3'-6" | 4'-9" | 4½" |
| R401 | 2 | 6'-5" | 1'-2" | 5'-3" | 2" |
| R402 | 2 | 7'-9" | - | - | Str. |
| R403 | 2 | 3'-11" | 2'-6" | 1'-0" | 3" |
| R404 | 5 | 8" | - | - | Str. |
| M401E | 4 | 2'-10" | 2'-0" | 9½" | 2" |

BENDING DIAGRAMS

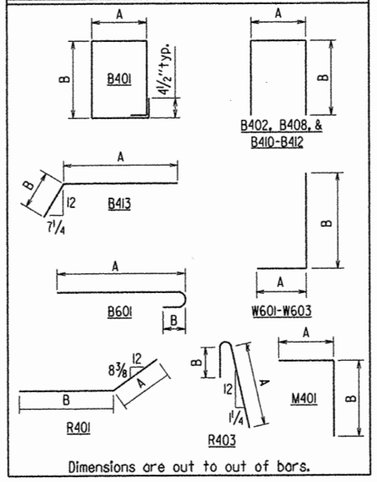


Dimensions are out to out of bars.

STATE OF ARKANSAS
Carl J. Fuselier
REGISTERED PROFESSIONAL ENGINEER
No. 7510
9/1/11
CARL J. FUSELIER

BRIDGE ENGINEER

# DETAILS OF END BENT 6
## STAGE I

ROUTE 265 SEC. 2

ARKANSAS STATE HIGHWAY COMMISSION

LITTLE ROCK, ARK.

DRAWN BY: TMG DATE: 7/18/2011 FILENAME: B040518X1_B1.DGN
CHECKED BY: BEF DATE: 8/17/11 SCALE: ⅜" = 1'-0" OR AS NOTED
DESIGNED BY: TMG DATE: 5/11

BRIDGE NO. 07229 DRAWING NO. 52400

| DATE REVISED | DATE FILMED | DATE REVISED | DATE FILMED | FED. ROAD DIST. NO. | STATE | FED. AID PROJ. NO. | SHEET NO. | TOTAL SHEETS |
|---|---|---|---|---|---|---|---|---|
| | | | | 6 | ARK. | | | |
| | | | | JOB NO. | | 040518 | 150 | 270 |
| | | | | 07229 | | END BENT 6 | | 52401 |

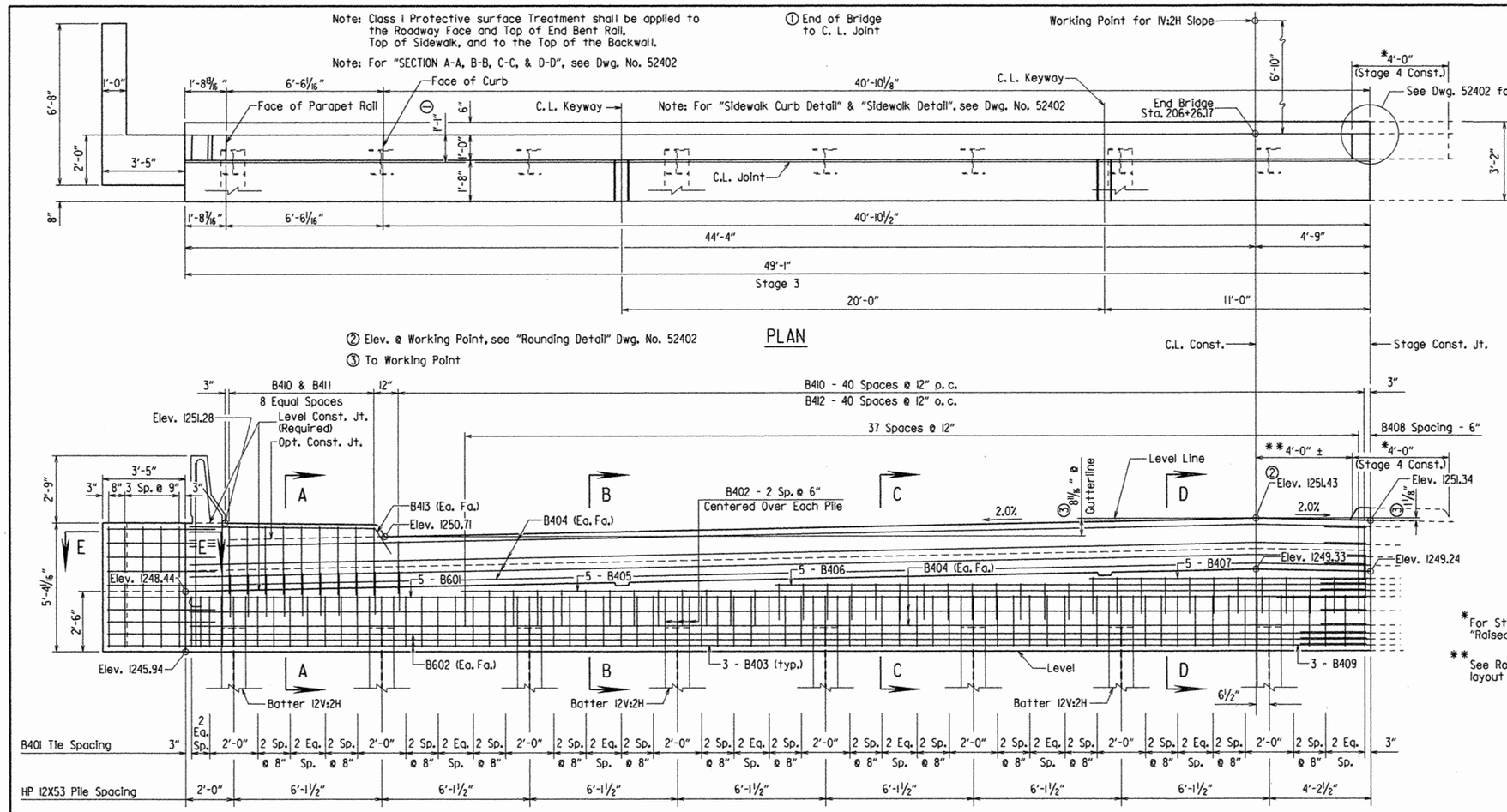


Lap Splice Lengths

#4 Bars = 1'-9"
#6 Bars = 3'-7" (Top)
2'-7" (Bottom)

*For Stage 4 Construction, see "Raised Median Detail" Dwg. No. 52402.

**See Roadway plans regarding layout of Raised Median.

## BAR LIST - STAGE 3

| MARK | NO. REQ'D. | LENGTH | "A" | "B" | P.D. |
|---|---|---|---|---|---|
| B401 | 57 | 10'-4" | 2'-10" | 2'-2" | 2" |
| B402 | 24 | 7'-0" | 2'-10" | 2'-2" | 2" |
| B403 | 21 | 5'-1" | - | - | Str. |
| B404 | 12 | 48'-9" | - | - | Str. |
| B405 | 5 | 37'-6" | - | - | Str. |
| B406 | 5 | 24'-6" | - | - | Str. |
| B407 | 5 | 11'-6" | - | - | Str. |
| B408 | 38 | 5'-8" | 2'-10" | 1'-6" | 2" |
| B409 | 3 | 3'-6" | - | - | Str. |
| B410 | 50 | 4'-8" | 1'-2" | 1'-10" | 2" |
| B411 | 9 | 5'-2" | 8" | 2'-4" | 2" |
| B412 | 42 | 4'-2" | 8" | 1'-10" | 2" |
| B413 | 2 | 9'-0" | 7'-7" | 1'-6" | 2" |
| W401 | 23 | 5'-0" | - | - | Str. |
| B601 | 5 | 49'-5" | 48'-9" | 6" | 4½" |
| B602 | 6 | 48'-9" | - | - | Str. |
| W601 | 10 | 9'-4" | 4'-9" | 4'-9" | 4½" |
| W602 | 10 | 10'-1" | 6'-4" | 3'-11" | 4½" |
| W603 | 10 | 8'-1" | 3'-6" | 4'-9" | 4½" |
| R401 | 2 | 6'-5" | 1'-2" | 5'-3" | 2" |
| R402 | 2 | 7'-9" | - | - | Str. |
| R403 | 2 | 3'-11" | 2'-6" | 1'-0" | 3" |
| R404 | 5 | 8" | - | - | Str. |

BENDING DIAGRAMS

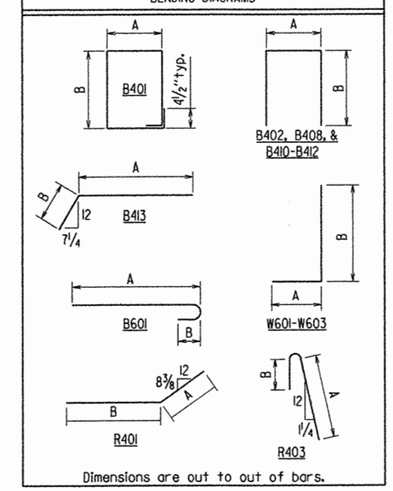


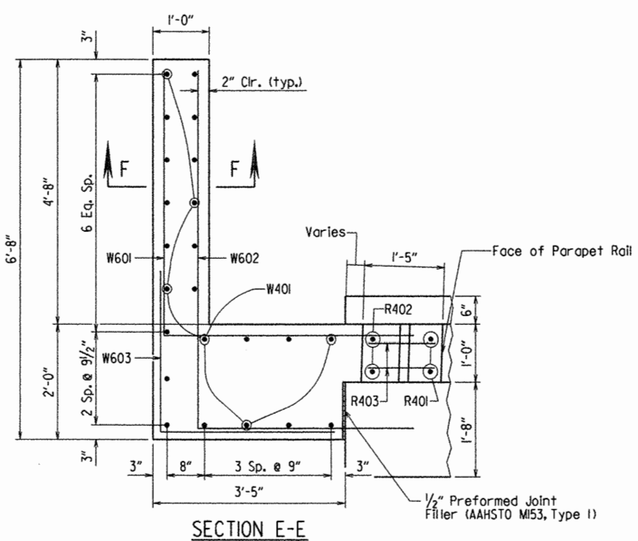


SECTION E-E
¾" = 1'-0"

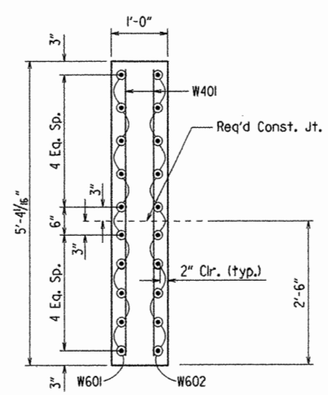


SECTION F-F
¾" = 1'-0"

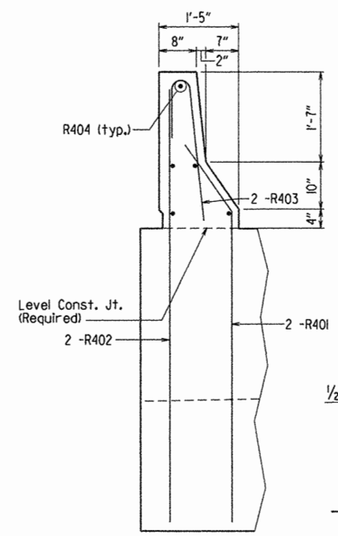


RAIL DETAIL
¾" = 1'-0"

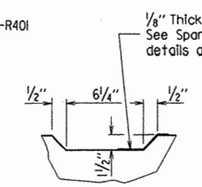


KEYWAY DETAIL
No Scale

GENERAL NOTES

All Concrete shall be Class "S" and shall be poured in the dry with a min. 28-day compression strength f'c = 3500 psi. All exposed corners to be chamfered ¾" unless otherwise noted.

All Reinforcing steel shall conform to AASHTO M31 or M53, Grade 60.

Concrete in Backwall shall not be poured before all deck span concrete has been poured.

For additional information, See Layout.

STATE OF ARKANSAS
Carl J. Puselier
REGISTERED PROFESSIONAL ENGINEER
No. 7510
9/1/11
CARL J. PUSELIER

BRIDGE ENGINEER

# DETAILS OF END BENT 6
# STAGE 3

ROUTE 265 SEC. 2

ARKANSAS STATE HIGHWAY COMMISSION

LITTLE ROCK, ARK.

DRAWN BY: TMG DATE: 7/18/2011
CHECKED BY: BEF DATE: 8/17/11
DESIGNED BY: TMG DATE: 5/11
FILENAME: B040518X1_BI.DGN
SCALE: ⅜" = 1'-0" OR AS NOTED

BRIDGE NO. 07229 DRAWING NO. 52401

| DATE REVISED | DATE FILMED | DATE REVISED | DATE FILMED | FED. ROAD DIST. NO. | STATE | FED. AID PROJ. NO. | SHEET NO. | TOTAL SHEETS |
|---|---|---|---|---|---|---|---|---|
| | | | | 6 | ARK. | | | |
| | | | | JOB NO. | | 040518 | 151 | 270 |

(1) 07229 COMMON END BENT DETAILS 52402

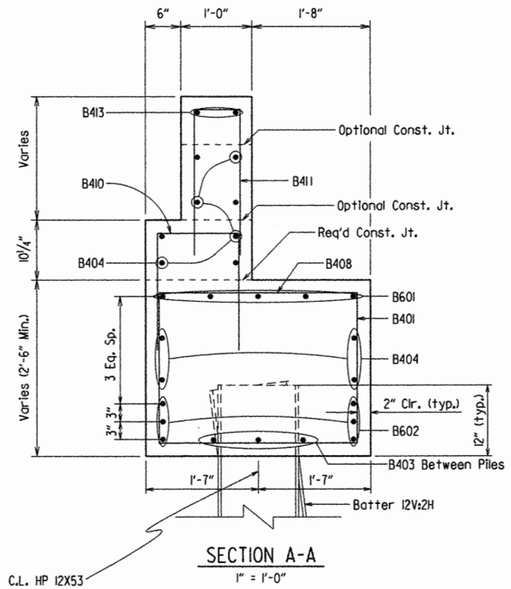


SECTION A-A

1" = 1'-0"

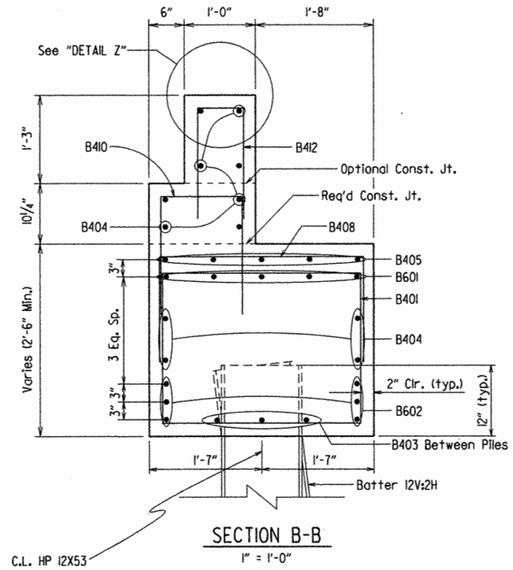


SECTION B-B

1" = 1'-0"

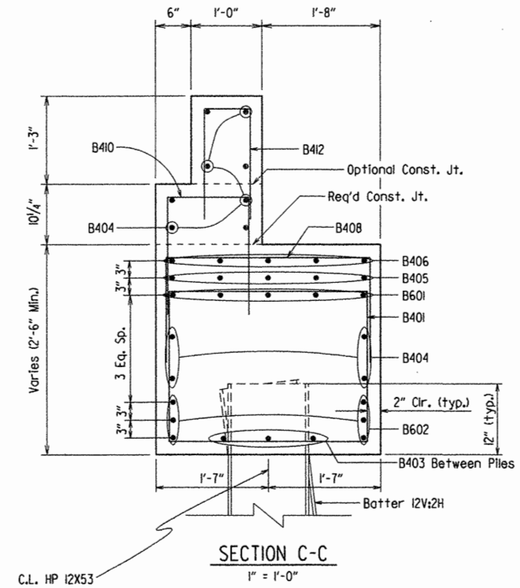


SECTION C-C

1" = 1'-0"

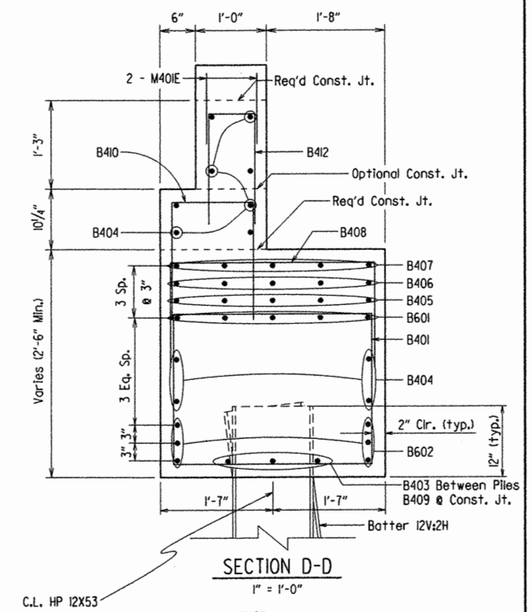


SECTION D-D

1" = 1'-0"

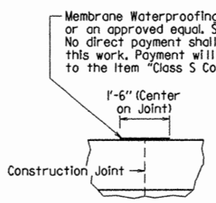


CONSTRUCTION JOINT DETAIL

Not to Scale

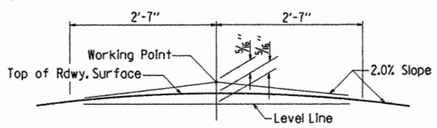


NOTE: Working Point matches Theoretical Roadway Grade.

ROUNDING DETAIL

No Scale

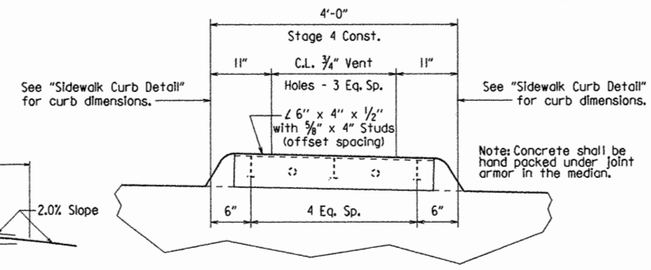


RAISED MEDIAN DETAIL AT JOINT

Not to Scale

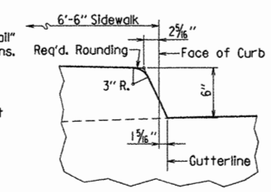


SIDEWALK CURB DETAIL

Not to Scale

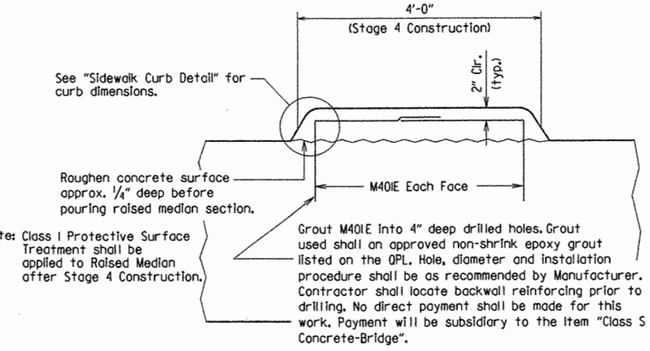


Note: Class I Protective Surface Treatment shall be applied to Raised Median after Stage 4 Construction.

RAISED MEDIAN DETAIL

Not to Scale

| | Dimension "A" | |
|---|---|---|
| | Stage 1 | Stage 3 |
| Bent 1 | 6'-6 1/16" | 6'-6" |
| Bent 6 | 6'-6 1/8" | 6'-6 1/16" |

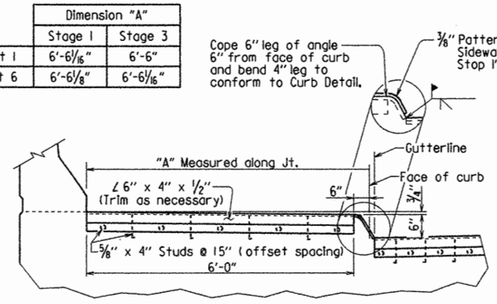


SIDEWALK DETAIL

Not to Scale

Note: Concrete shall be hand packed under the joint armor in the sidewalk. See Dwg. No. 52416 for additional details.

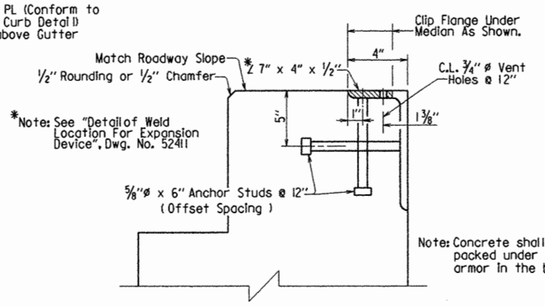


DETAIL Z

Not to Scale

For additional Joint Details, See Dwg. No. 52416.

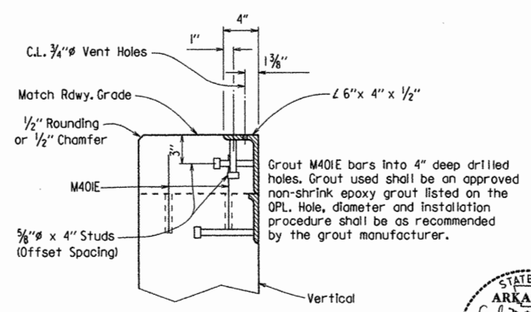


Grout M401E bars into 4" deep drilled holes. Grout used shall be an approved non-shrink epoxy grout listed on the OPL. Hole, diameter and installation procedure shall be as recommended by the grout manufacturer.

RAISED MEDIAN SECTION

No Scale

STATE OF ARKANSAS
Carl J. Fuselier
REGISTERED PROFESSIONAL ENGINEER
No. 7510
9/1/11
CARL J. FUSELIER

BRIDGE ENGINEER

GENERAL NOTES

All Concrete shall be Class "S" and shall be poured in the dry with a min. 28-day compression strength f'c = 3500 psi. All exposed corners to be chamfered ¾" unless otherwise noted.

All Reinforcing steel shall conform to AASHTO M31 or M53, Grade 60.

For additional information, See Layout.

COMMON DETAILS OF END BENTS

ROUTE 265 SEC. 2

ARKANSAS STATE HIGHWAY COMMISSION

LITTLE ROCK, ARK.

| | | | | | |
|---|---|---|---|---|---|
| DRAWN BY: | TMG | DATE: | 7/18/2011 | FILENAME: | B040518X1_BI.DGN |
| CHECKED BY: | JGT | DATE: | 8/12/11 | SCALE: | AS NOTED |
| DESIGNED BY: | TMG | DATE: | 5/11 | | |

BRIDGE NO. 07229 DRAWING NO. 52402

| DATE REVISED | DATE FILMED | DATE REVISED | DATE FILMED | FED. ROAD DIST. NO. | STATE | FED. AID PROJ. NO. | SHEET NO. | TOTAL SHEETS |
|---|---|---|---|---|---|---|---|---|
| | | | | 6 | ARK. | | | |
| | | | | JOB NO. | | 040518 | 152 | 270 |
| | | | | (1) 07229 | | INT. BENT 2 | 52403 | |

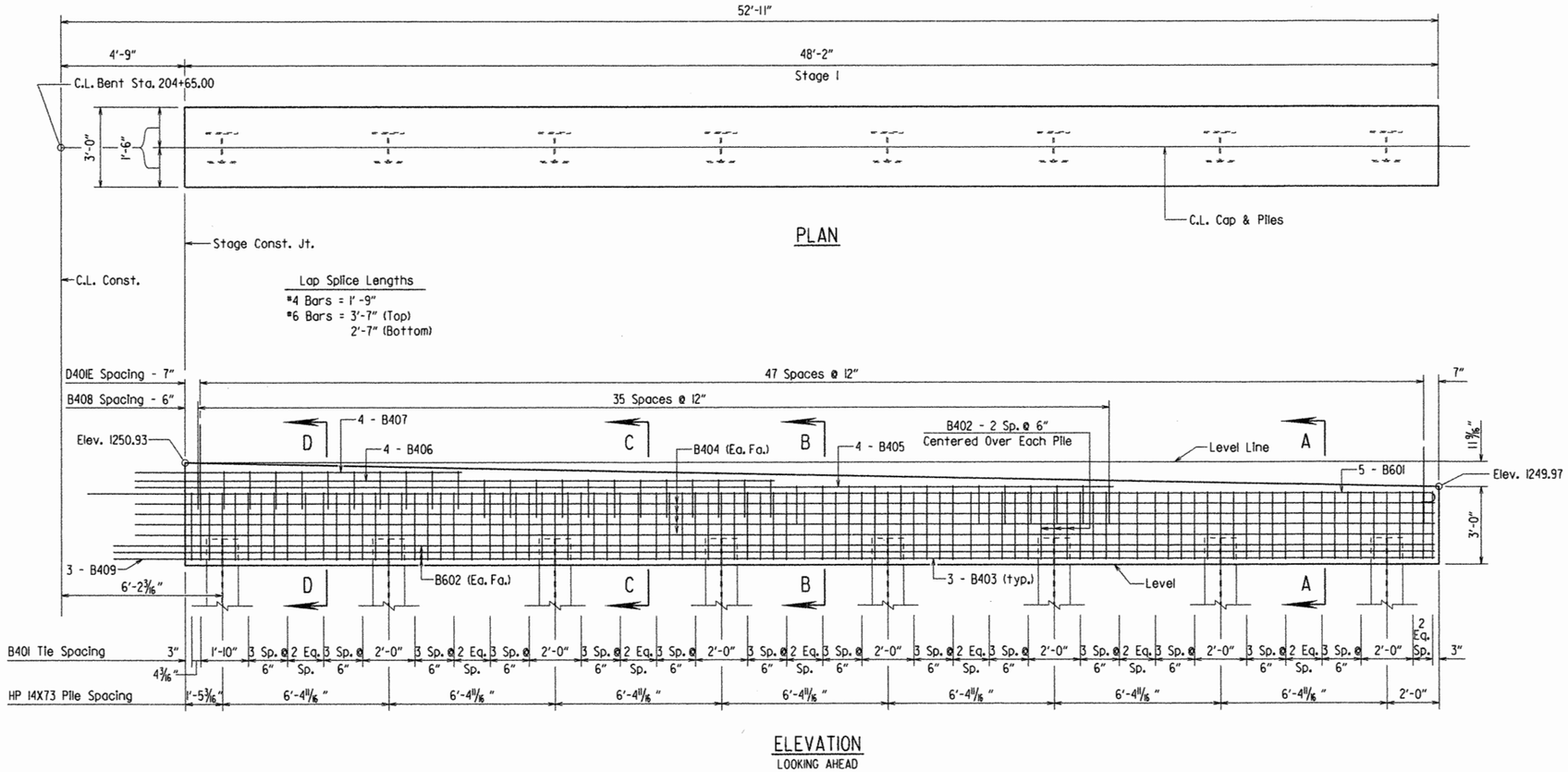


## BAR LIST - STAGE I

| MARK | NO. REQ'D. | LENGTH | P.D. |
|---|---|---|---|
| B401 | 68 | 11'-0" | 2" |
| B402 | 24 | 7'-10" | 2" |
| B403 | 21 | 5'-2" | Str. |
| B404 | 8 | 49'-11" | Str. |
| B405 | 4 | 37'-7" | Str. |
| B406 | 4 | 24'-7" | Str. |
| B407 | 4 | 12'-7" | Str. |
| B408 | 36 | 5'-6" | 2" |
| B409 | 3 | 2'-8" | Str. |
| | | | |
| *D401E | 96 | 3'-0" | Str. |
| | | | |
| B601 | 5 | 52'-5" | 4 1/2" |
| B602 | 6 | 50'-9" | Str. |

BENDING DIAGRAMS

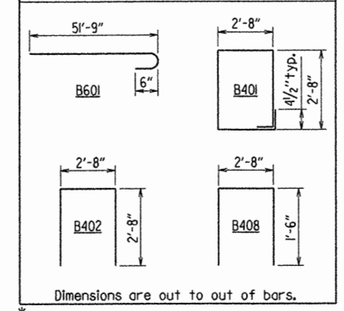


*D401E bars shall be epoxy coated and shall be measured and paid for as "Epoxy Coated Reinforcing Steel (Grade 60)."

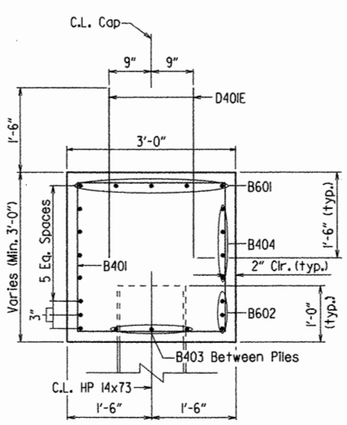


SECTION A-A
3/4" = 1'-0"

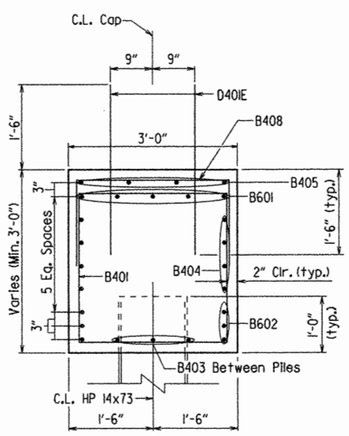


SECTION B-B
3/4" = 1'-0"

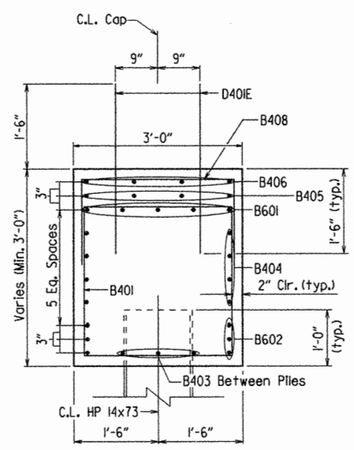


SECTION C-C
3/4" = 1'-0"

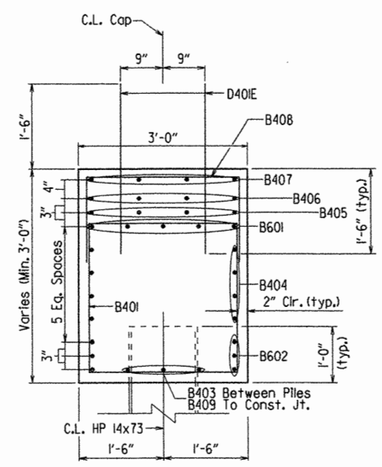


SECTION D-D
3/4" = 1'-0"

GENERAL NOTES

All Concrete shall be Class "S" and shall be poured in the dry with a min. 28-day compression strength f'c = 3500 psi. All exposed corners to be chamfered 3/4" unless otherwise noted.

All Reinforcing steel shall conform to AASHTO M31 or M53, Grade 60.

For details of pile encasement, see dwg. no. 14995A.

For additional information, See Layout.

STATE OF ARKANSAS
Carl J. Fuselier
REGISTERED PROFESSIONAL ENGINEER
No. 7510
9/1/11
CARL J. FUSELIER

BRIDGE ENGINEER

# DETAILS OF INTERMEDIATE BENT NO. 2
## STAGE I

ROUTE 265 SEC. 2

ARKANSAS STATE HIGHWAY COMMISSION

LITTLE ROCK, ARK.

| | | | | | |
|---|---|---|---|---|---|
| DRAWN BY: | TMG | DATE: | 6/2/2011 | FILENAME: | B040518X1_B1.DGN |
| CHECKED BY: | BEF | DATE: | 8/17/11 | SCALE: | 3/8" = 1'-0" OR AS NOTED |
| DESIGNED BY: | TMG | DATE: | 5/11 | | |

BRIDGE NO. 07229 DRAWING NO. 52403

| DATE REVISED | DATE FILMED | DATE REVISED | DATE FILMED | FED. ROAD DIST. NO. | STATE | FED. AID PROJ. NO. | SHEET NO. | TOTAL SHEETS |
|---|---|---|---|---|---|---|---|---|
| | | | | 6 | ARK. | | | |
| | | | | JOB NO. | | 040518 | 153 | 270 |
| | | | | (1) 07229 | | INT. BENT 2 | 52404 | |

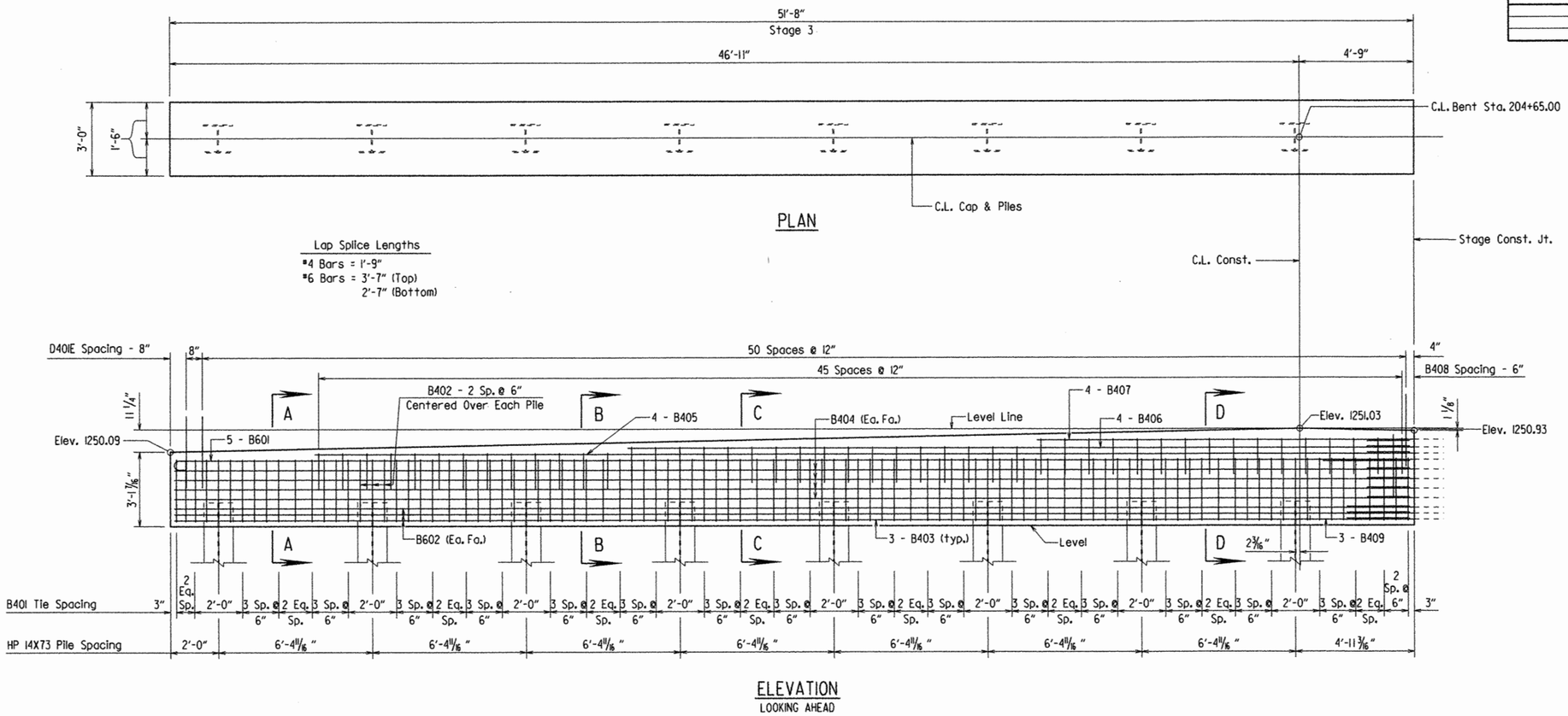


## BAR LIST - STAGE 3

| MARK | NO. REQ'D. | LENGTH | P.D. |
|---|---|---|---|
| B401 | 74 | 11'-0" | 2" |
| B402 | 24 | 7'-10" | 2" |
| B403 | 21 | 5'-2" | Str. |
| B404 | 8 | 51'-4" | Str. |
| B405 | 4 | 45'-6" | Str. |
| B406 | 4 | 32'-6" | Str. |
| B407 | 4 | 15'-6" | Str. |
| B408 | 46 | 5'-6" | 2" |
| B409 | 3 | 4'-2" | Str. |
| | | | |
| *D401E | 104 | 3'-0" | Str. |
| | | | |
| B601 | 5 | 52'-0" | 4 1/2" |
| B602 | 6 | 51'-4" | Str. |

BENDING DIAGRAMS

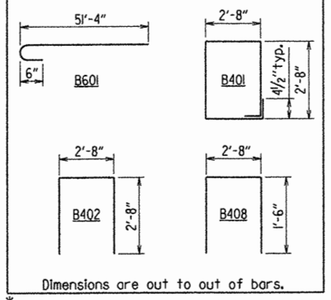


*D401E bars shall be epoxy coated and shall be measured and paid for as "Epoxy Coated Reinforcing Steel (Grade 60)."

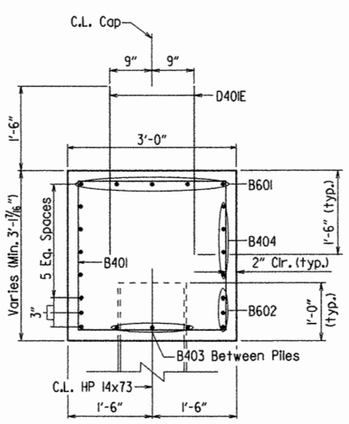


SECTION A-A
3/4" = 1'-0"

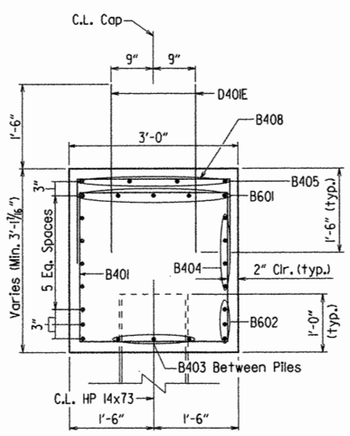


SECTION B-B
3/4" = 1'-0"

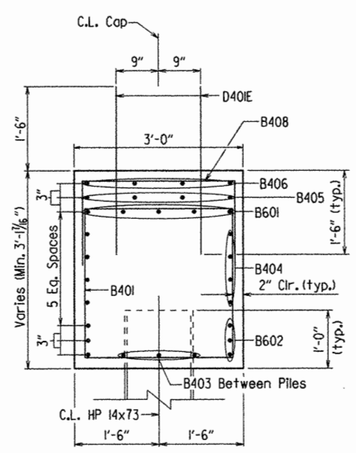


SECTION C-C
3/4" = 1'-0"

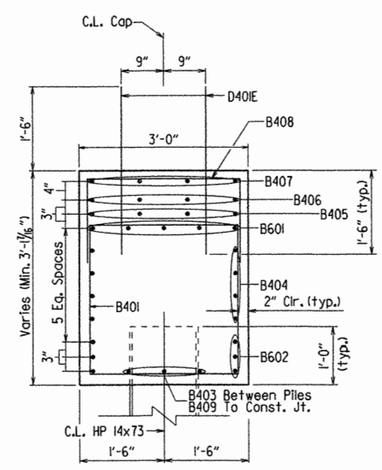


SECTION D-D
3/4" = 1'-0"

GENERAL NOTES

All Concrete shall be Class "S" and shall be poured in the dry with a min. 28-day compression strength f'c = 3500 psi. All exposed corners to be chamfered 3/4" unless otherwise noted.

All Reinforcing steel shall conform to AASHTO M31 or M53, Grade 60.

For details of pile encasement, see dwg. no. 14995A.

For additional information, See Layout.

STATE OF ARKANSAS
Carl J. Fuselier
REGISTERED PROFESSIONAL ENGINEER
No. 7510
9/1/11
CARL J. FUSELIER

BRIDGE ENGINEER

# DETAILS OF INTERMEDIATE BENT NO. 2
## STAGE 3

ROUTE 265 SEC. 2

ARKANSAS STATE HIGHWAY COMMISSION

LITTLE ROCK, ARK.

DRAWN BY: TMG DATE: 6/2/2011 FILENAME: B04051BX1_B1.DGN
CHECKED BY: BEF DATE: 8/17/11 SCALE: 3/8" = 1'-0" OR AS NOTED
DESIGNED BY: TMG DATE: 5/11

BRIDGE NO. 07229 DRAWING NO. 52404

| DATE REVISED | DATE FILMED | DATE REVISED | DATE FILMED | FED. ROAD DIST. NO. | STATE | FED. AID PROJ. NO. | SHEET NO. | TOTAL SHEETS |
|---|---|---|---|---|---|---|---|---|
| | | | | 6 | ARK. | | | |
| | | | | JOB NO. | | 040518 | 154 | 220 |
| | | | | (1) 07229 | | INT. BENT 3 | 52405 | |

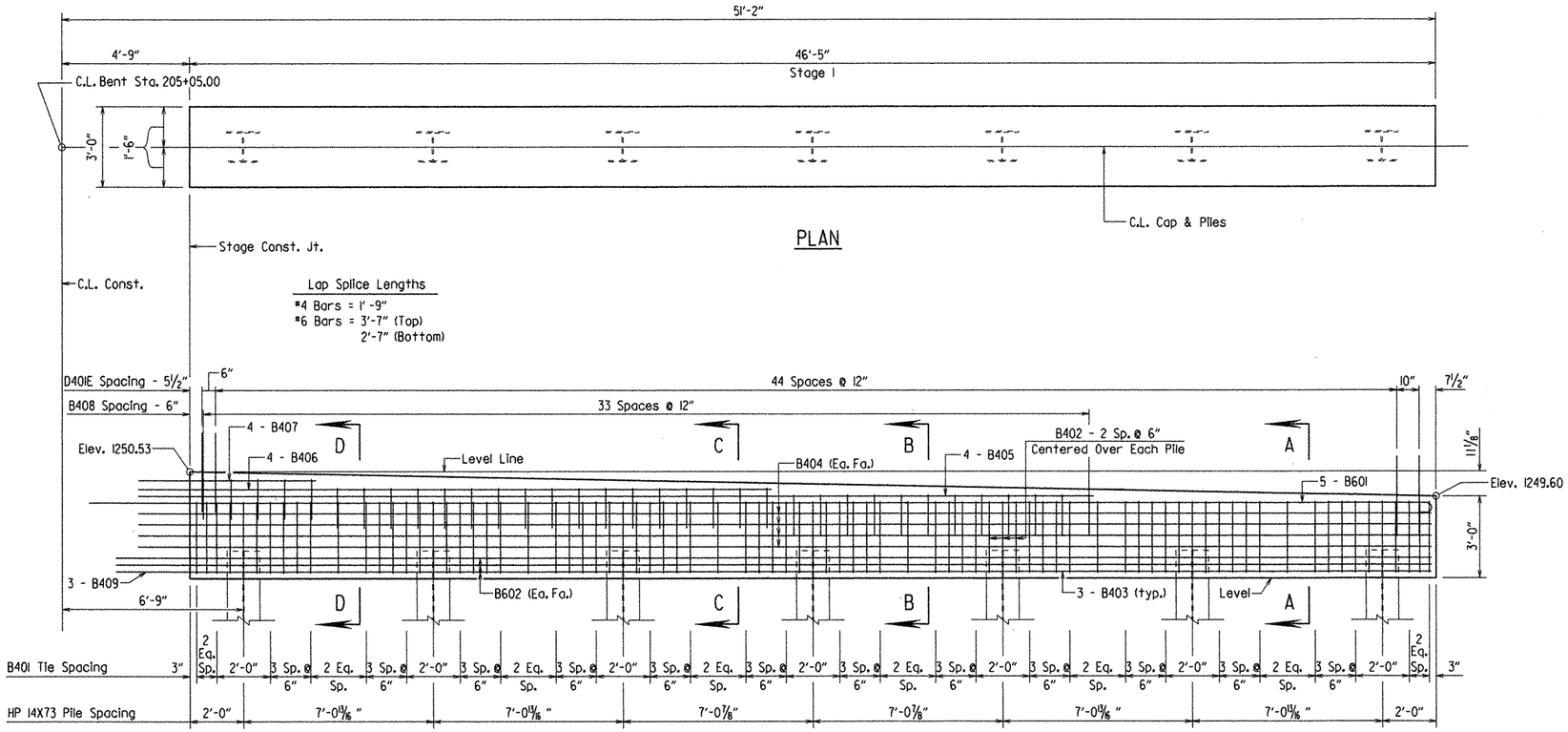


PLAN

ELEVATION
LOOKING AHEAD

## BAR LIST - STAGE 1

| MARK | NO. REQ'D. | LENGTH | P.D. |
|---|---|---|---|
| B401 | 60 | 11'-0" | 2" |
| B402 | 21 | 7'-10" | 2" |
| B403 | 18 | 5'-11" | Str. |
| B404 | 8 | 48'-2" | Str. |
| B405 | 4 | 35'-7" | Str. |
| B406 | 4 | 23'-7" | Str. |
| B407 | 4 | 6'-7" | Str. |
| B408 | 34 | 5'-6" | 2" |
| B409 | 3 | 3'-2" | Str. |
| | | | |
| *D401E | 94 | 3'-0" | Str. |
| | | | |
| B601 | 5 | 50'-8" | 4½" |
| B602 | 6 | 49'-0" | Str. |

BENDING DIAGRAMS

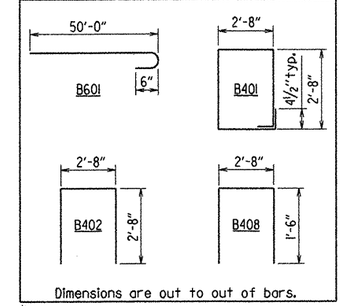


*D401E bars shall be epoxy coated and shall be measured and paid for as "Epoxy Coated Reinforcing Steel (Grade 60)."

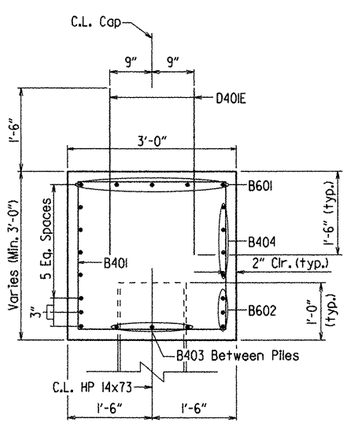


SECTION A-A
¾" = 1'-0"

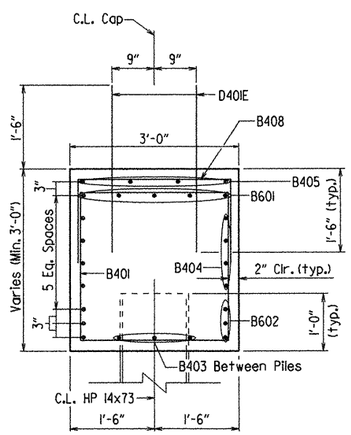


SECTION B-B
¾" = 1'-0"

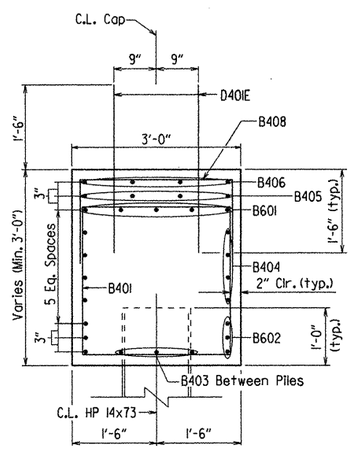


SECTION C-C
¾" = 1'-0"

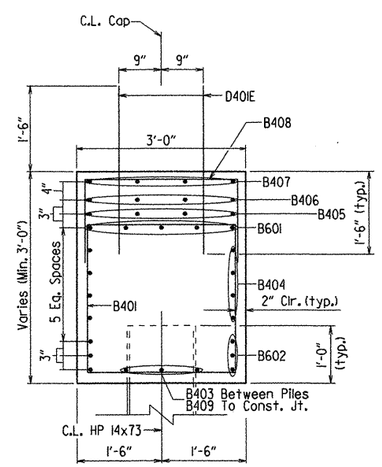


SECTION D-D
¾" = 1'-0"

GENERAL NOTES

All Concrete shall be Class "S" and shall be poured in the dry with a min. 28-day compression strength f'c = 3500 psi. All exposed corners to be chamfered ¾" unless otherwise noted.

All Reinforcing steel shall conform to AASHTO M31 or M53, Grade 60.

For details of pile encasement, see dwg. no. 14995A.

For additional information, See Layout.

STATE OF ARKANSAS
Carl J. Fuselier
REGISTERED PROFESSIONAL ENGINEER
No. 7510
7/1/11
CARL J. FUSELIER

BRIDGE ENGINEER

# DETAILS OF INTERMEDIATE BENT NO. 3
## STAGE 1

ROUTE 265 SEC. 2

ARKANSAS STATE HIGHWAY COMMISSION

LITTLE ROCK, ARK.

| | | | |
|---|---|---|---|
| DRAWN BY: TMG | DATE: 6/3/2011 | FILENAME: | B040518X1_B1.DGN |
| CHECKED BY: BEF | DATE: 6/17/11 | SCALE: | ⅜" = 1'-0" OR AS NOTED |
| DESIGNED BY: TMG | DATE: 5/11 | | |

BRIDGE NO. 07229 DRAWING NO. 52405

| DATE REVISED | DATE FILMED | DATE REVISED | DATE FILMED | FED. ROAD DIST. NO. | STATE | FED. AID PROJ. NO. | SHEET NO. | TOTAL SHEETS |
|---|---|---|---|---|---|---|---|---|
| | | | | 6 | ARK. | | | |
| | | | | JOB NO. | | 040518 | 155 | 270 |
| | | | | (1) 07229 | | INT. BENT 3 | | 52406 |

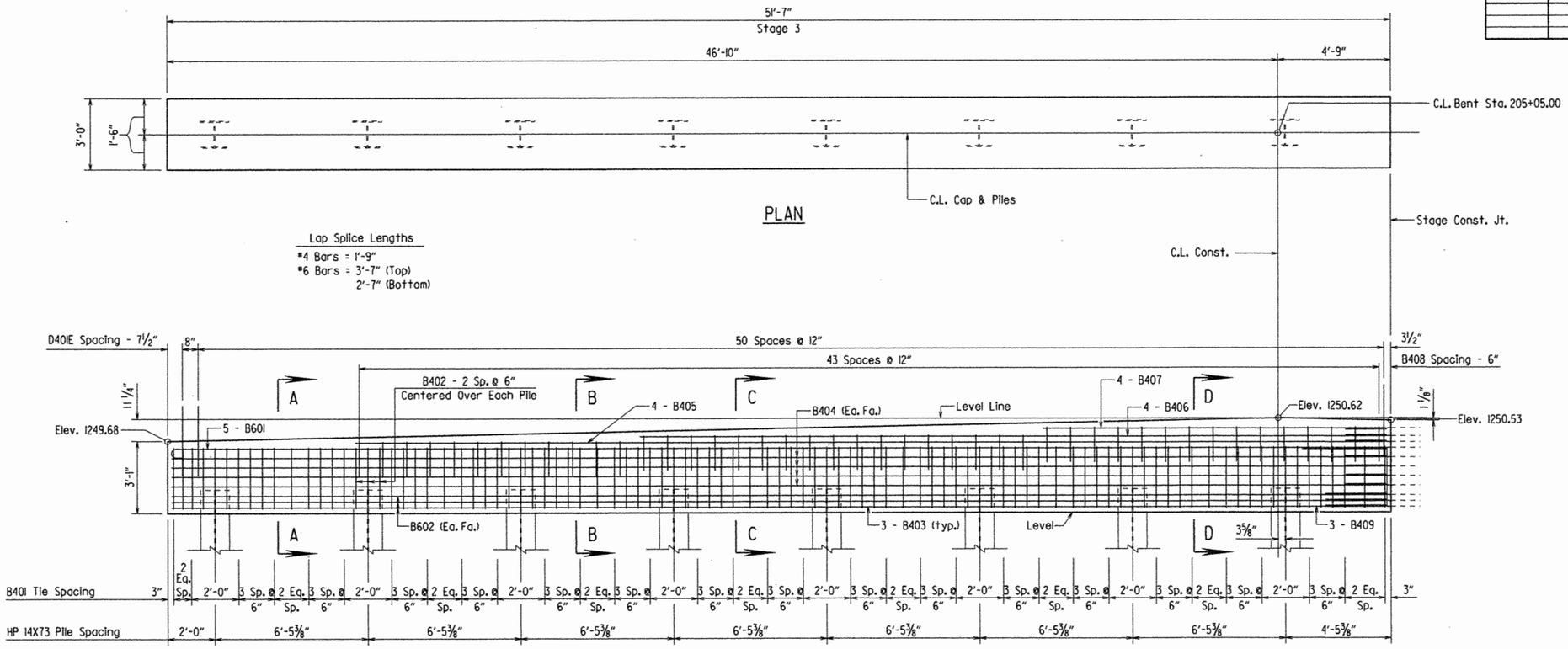


PLAN

Lap Splice Lengths
#4 Bars = 1'-9"
#6 Bars = 3'-7" (Top)
2'-7" (Bottom)

ELEVATION
LOOKING AHEAD

## BAR LIST - STAGE 3

| MARK | NO. REQ'D. | LENGTH | P.D. |
|---|---|---|---|
| B401 | 72 | 11'-0" | 2" |
| B402 | 24 | 7'-10" | 2" |
| B403 | 21 | 5'-3" | Str. |
| B404 | 8 | 51'-3" | Str. |
| B405 | 4 | 43'-6" | Str. |
| B406 | 4 | 31'-6" | Str. |
| B407 | 4 | 14'-6" | Str. |
| B408 | 44 | 5'-6" | 2" |
| B409 | 3 | 3'-9" | Str. |
| | | | |
| *D401E | 104 | 3'-0" | Str. |
| | | | |
| B601 | 5 | 51'-11" | 4½" |
| B602 | 6 | 51'-3" | Str. |

BENDING DIAGRAMS

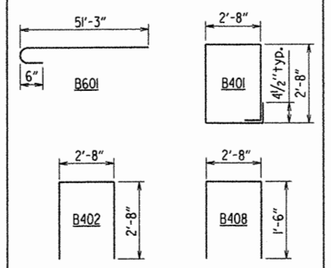


Dimensions are out to out of bars.

*D401E bars shall be epoxy coated and shall be measured and paid for as "Epoxy Coated Reinforcing Steel (Grade 60)."

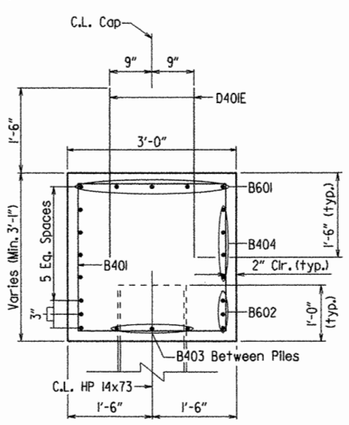


SECTION A-A
¾" = 1'-0"

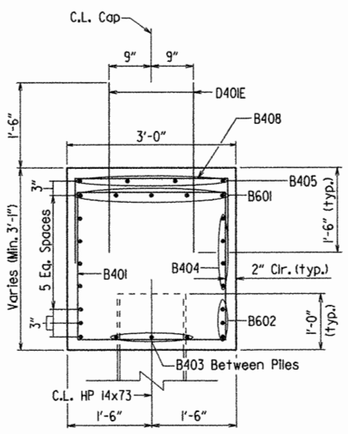


SECTION B-B
¾" = 1'-0"

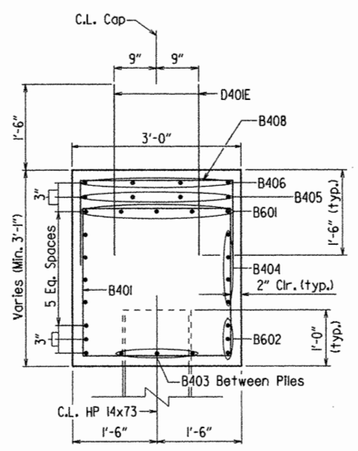


SECTION C-C
¾" = 1'-0"

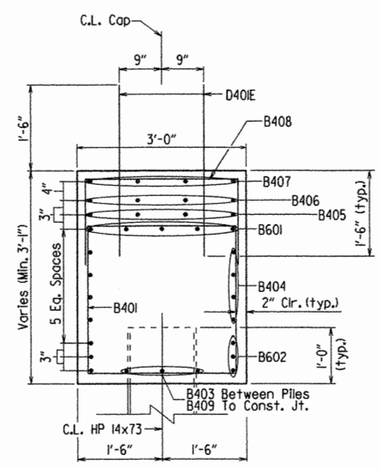


SECTION D-D
¾" = 1'-0"

GENERAL NOTES

All Concrete shall be Class "S" and shall be poured in the dry with a min. 28-day compression strength f'c = 3500 psi. All exposed corners to be chamfered ¾" unless otherwise noted.

All Reinforcing steel shall conform to AASHTO M31 or M53, Grade 60.

For details of pile encasement, see dwg. no. 14995A.

For additional information, See Layout.

STATE OF ARKANSAS
REGISTERED PROFESSIONAL ENGINEER
No. 7510
9/1/11
CARL J. RUSELLER

BRIDGE ENGINEER

# DETAILS OF INTERMEDIATE BENT NO. 3
## STAGE 3

ROUTE 265 SEC. 2

ARKANSAS STATE HIGHWAY COMMISSION

LITTLE ROCK, ARK.

DRAWN BY: TMG DATE: 6/3/2011 FILENAME: B040518X1_B1.DGN
CHECKED BY: BEF DATE: 8/17/11 SCALE: ⅜" = 1'-0" OR AS NOTED
DESIGNED BY: TMG DATE: 5/11

BRIDGE NO. 07229 DRAWING NO. 52406

| DATE REVISED | DATE FILMED | DATE REVISED | DATE FILMED | FED. ROAD DIST. NO. | STATE | FED. AID PROJ. NO. | SHEET NO. | TOTAL SHEETS |
|---|---|---|---|---|---|---|---|---|
| | | | | 6 | ARK. | | | |
| | | | | JOB NO. | | 040518 | 156 | 270 |
| | | | | 1 07229 | | INT. BENT 4 | 52407 | |

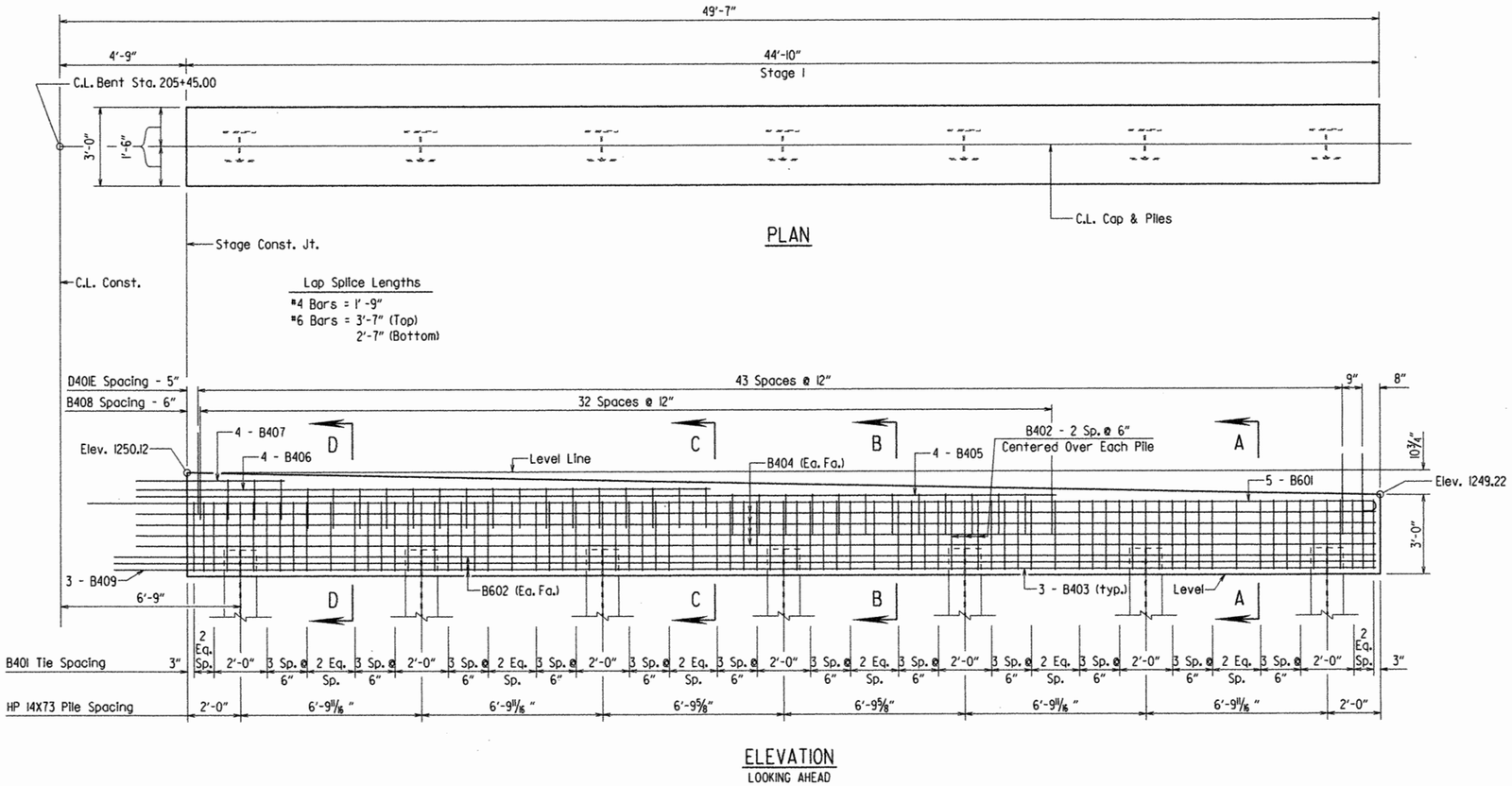


## BAR LIST - STAGE I

| MARK | NO. REQ'D. | LENGTH | P.D. |
|---|---|---|---|
| B401 | 60 | 11'-0" | 2" |
| B402 | 21 | 7'-10" | 2" |
| B403 | 18 | 5'-8" | Str. |
| B404 | 8 | 46'-7" | Str. |
| B405 | 4 | 34'-7" | Str. |
| B406 | 4 | 21'-7" | Str. |
| B407 | 4 | 5'-7" | Str. |
| B408 | 33 | 5'-6" | 2" |
| B409 | 3 | 3'-2" | Str. |
| | | | |
| *D401E | 90 | 3'-0" | Str. |
| | | | |
| B601 | 5 | 49'-1" | 4½" |
| B602 | 6 | 47'-5" | Str. |

BENDING DIAGRAMS

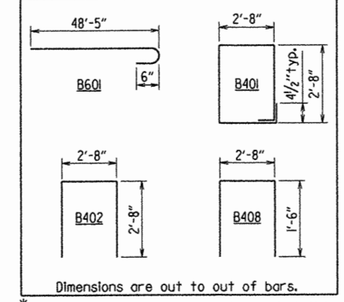


*D401E bars shall be epoxy coated and shall be measured and paid for as "Epoxy Coated Reinforcing Steel (Grade 60)."

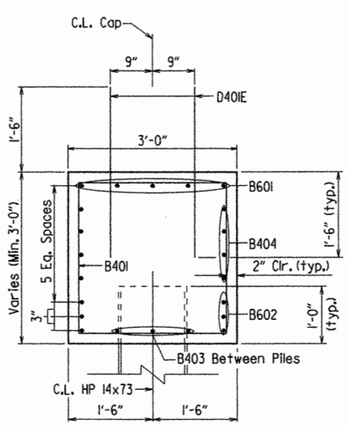


SECTION A-A
¾" = 1'-0"

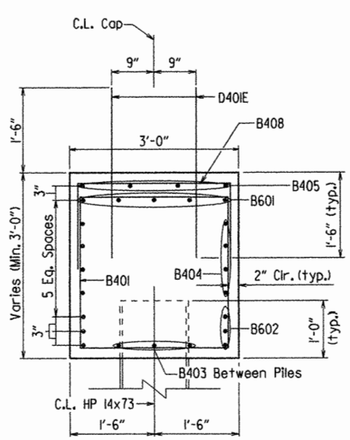


SECTION B-B
¾" = 1'-0"

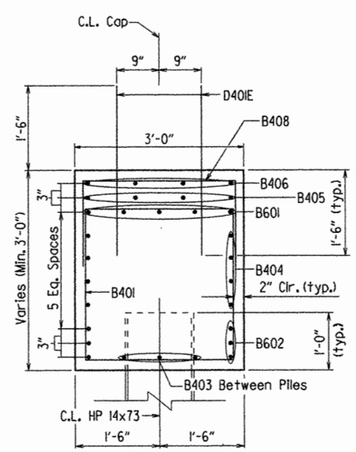


SECTION C-C
¾" = 1'-0"

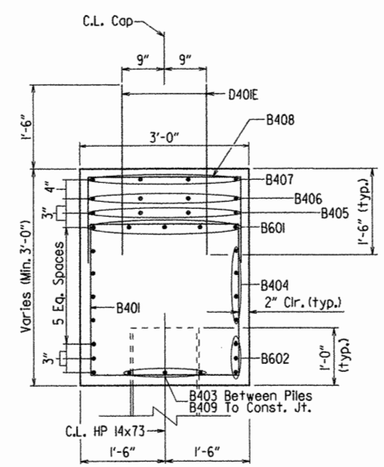


SECTION D-D
¾" = 1'-0"

GENERAL NOTES

All Concrete shall be Class "S" and shall be poured in the dry with a min. 28-day compression strength f'c = 3500 psi. All exposed corners to be chamfered ¾" unless otherwise noted.

All Reinforcing steel shall conform to AASHTO M31 or M53, Grade 60.

For details of pile encasement, see dwg. no. 14995A.

For additional information, See Layout.

STATE OF ARKANSAS
Carl J. Fuselier
REGISTERED PROFESSIONAL ENGINEER
No. 7510
9/1/11
CARL J. FUSELIER

BRIDGE ENGINEER

# DETAILS OF INTERMEDIATE BENT NO. 4
## STAGE I

ROUTE 265 SEC. 2

ARKANSAS STATE HIGHWAY COMMISSION

LITTLE ROCK, ARK.

| | | | | | |
|---|---|---|---|---|---|
| DRAWN BY: | TMG | DATE: | 6/3/2011 | FILENAME: | B040518X1_BI.DGN |
| CHECKED BY: | BEF | DATE: | 8/17/11 | SCALE: | ⅜" = 1'-0" OR AS NOTED |
| DESIGNED BY: | TMG | DATE: | 5/11 | | |

BRIDGE NO. 07229 DRAWING NO. 52407

| DATE REVISED | DATE FILMED | DATE REVISED | DATE FILMED | FED. ROAD DIST. NO. | STATE | FED. AID PROJ. NO. | SHEET NO. | TOTAL SHEETS |
|---|---|---|---|---|---|---|---|---|
| | | | | 6 | ARK. | | | |
| | | | | JOB NO. | | 040518 | 157 | 270 |
| | | | | (1) 07229 | | INT. BENT 4 | | 52408 |

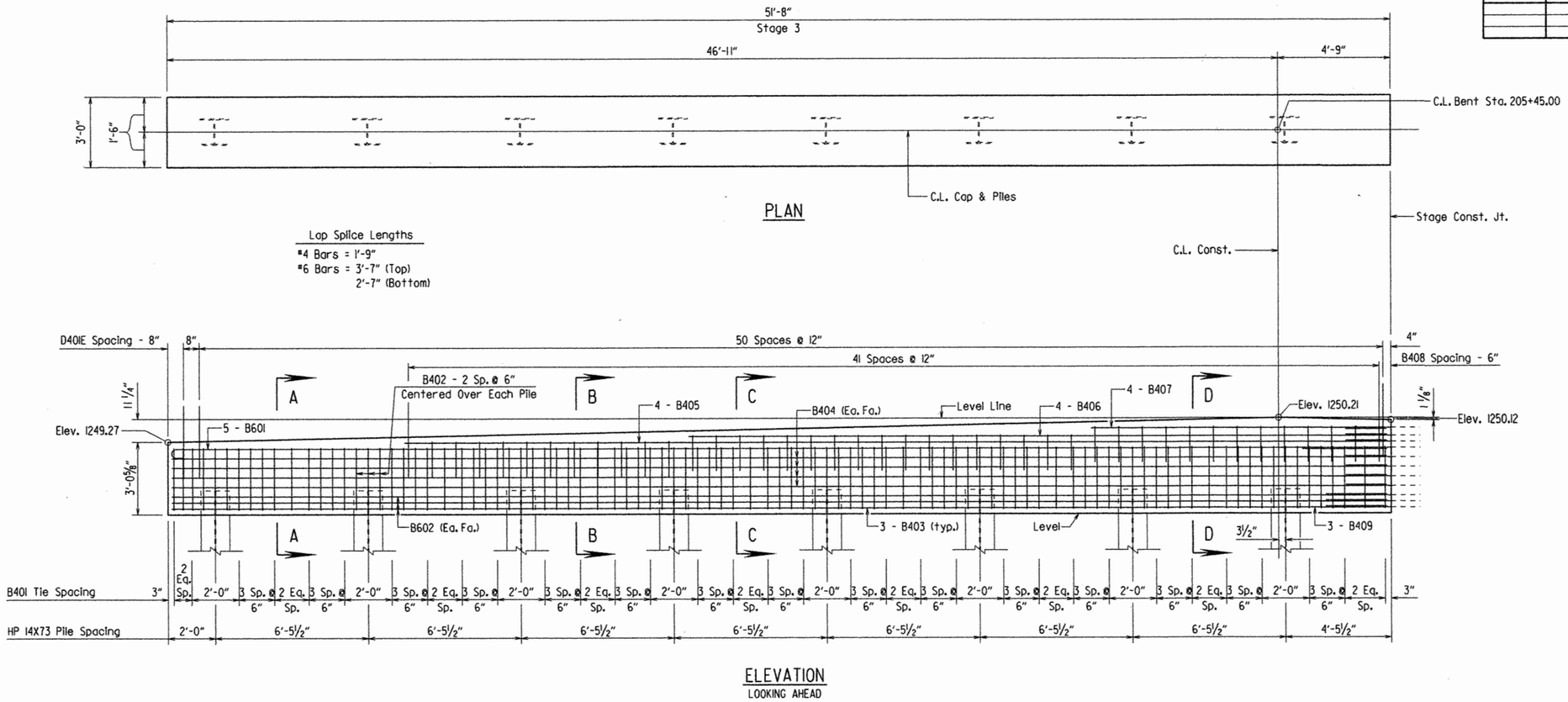


## BAR LIST - STAGE 3

| MARK | NO. REQ'D. | LENGTH | P.D. |
|---|---|---|---|
| B401 | 72 | 11'-0" | 2" |
| B402 | 24 | 7'-10" | 2" |
| B403 | 21 | 5'-3" | Str. |
| B404 | 8 | 51'-4" | Str. |
| B405 | 4 | 41'-6" | Str. |
| B406 | 4 | 29'-6" | Str. |
| B407 | 4 | 12'-6" | Str. |
| B408 | 42 | 5'-6" | 2" |
| B409 | 3 | 3'-9" | Str. |
| | | | |
| *D401E | 104 | 3'-0" | Str. |
| | | | |
| B601 | 5 | 52'-0" | 4 1/2" |
| B602 | 6 | 51'-4" | Str. |

BENDING DIAGRAMS

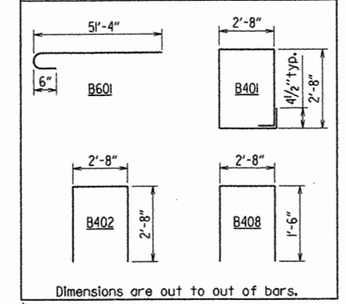


*D401E bars shall be epoxy coated and shall be measured and paid for as "Epoxy Coated Reinforcing Steel (Grade 60)."

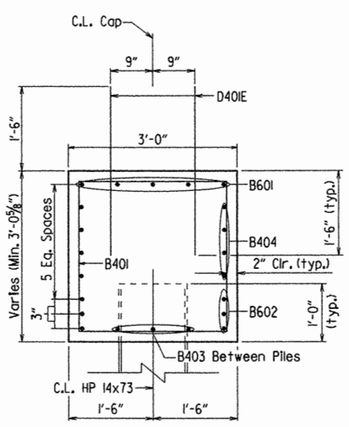


SECTION A-A
3/4" = 1'-0"

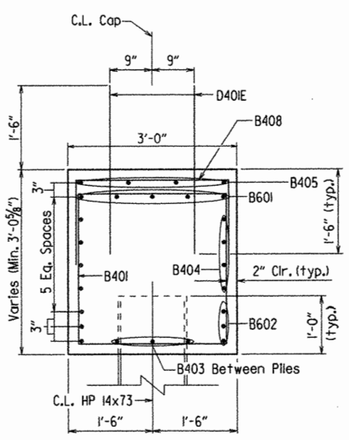


SECTION B-B
3/4" = 1'-0"

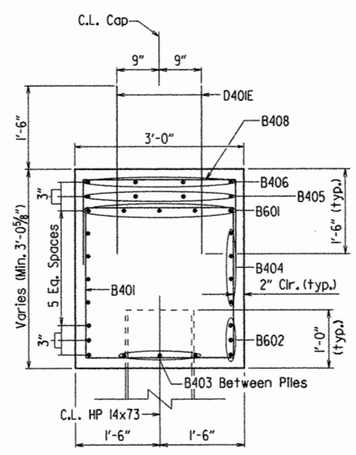


SECTION C-C
3/4" = 1'-0"

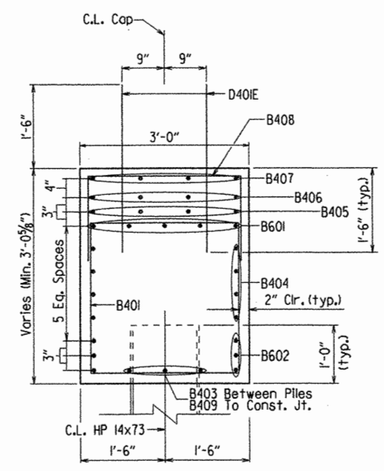


SECTION D-D
3/4" = 1'-0"

GENERAL NOTES

All Concrete shall be Class "S" and shall be poured in the dry with a min. 28-day compression strength f'c = 3500 psi. All exposed corners to be chamfered 3/4" unless otherwise noted.

All Reinforcing steel shall conform to AASHTO M31 or M53, Grade 60.

For details of pile encasement, see dwg. no. 14995A.

For additional information, See Layout.

STATE OF ARKANSAS
Carl J. Fuselier
REGISTERED PROFESSIONAL ENGINEER
No. 7510
9/1/11
CARL J. FUSELIER

BRIDGE ENGINEER

# DETAILS OF INTERMEDIATE BENT NO. 4
## STAGE 3

ROUTE 265 SEC. 2

ARKANSAS STATE HIGHWAY COMMISSION

LITTLE ROCK, ARK.

| | | | | | |
|---|---|---|---|---|---|
| DRAWN BY: | TMG | DATE: | 6/3/2011 | FILENAME: | B040518XI_BI.DGN |
| CHECKED BY: | BEF | DATE: | 8/17/11 | SCALE: | 3/8" = 1'-0" OR AS NOTED |
| DESIGNED BY: | TMG | DATE: | 5/11 | | |

BRIDGE NO. 07229 DRAWING NO. 52408

| DATE REVISED | DATE FILMED | DATE REVISED | DATE FILMED | FED. ROAD DIST. NO. | STATE | FED. AID PROJ. NO. | SHEET NO. | TOTAL SHEETS |
|---|---|---|---|---|---|---|---|---|
| | | | | 6 | ARK. | | | |
| | | | | JOB NO. | | 040518 | 158 | 270 |
| | | | | (1) 07229 | | INT. BENT 5 | 52409 | |

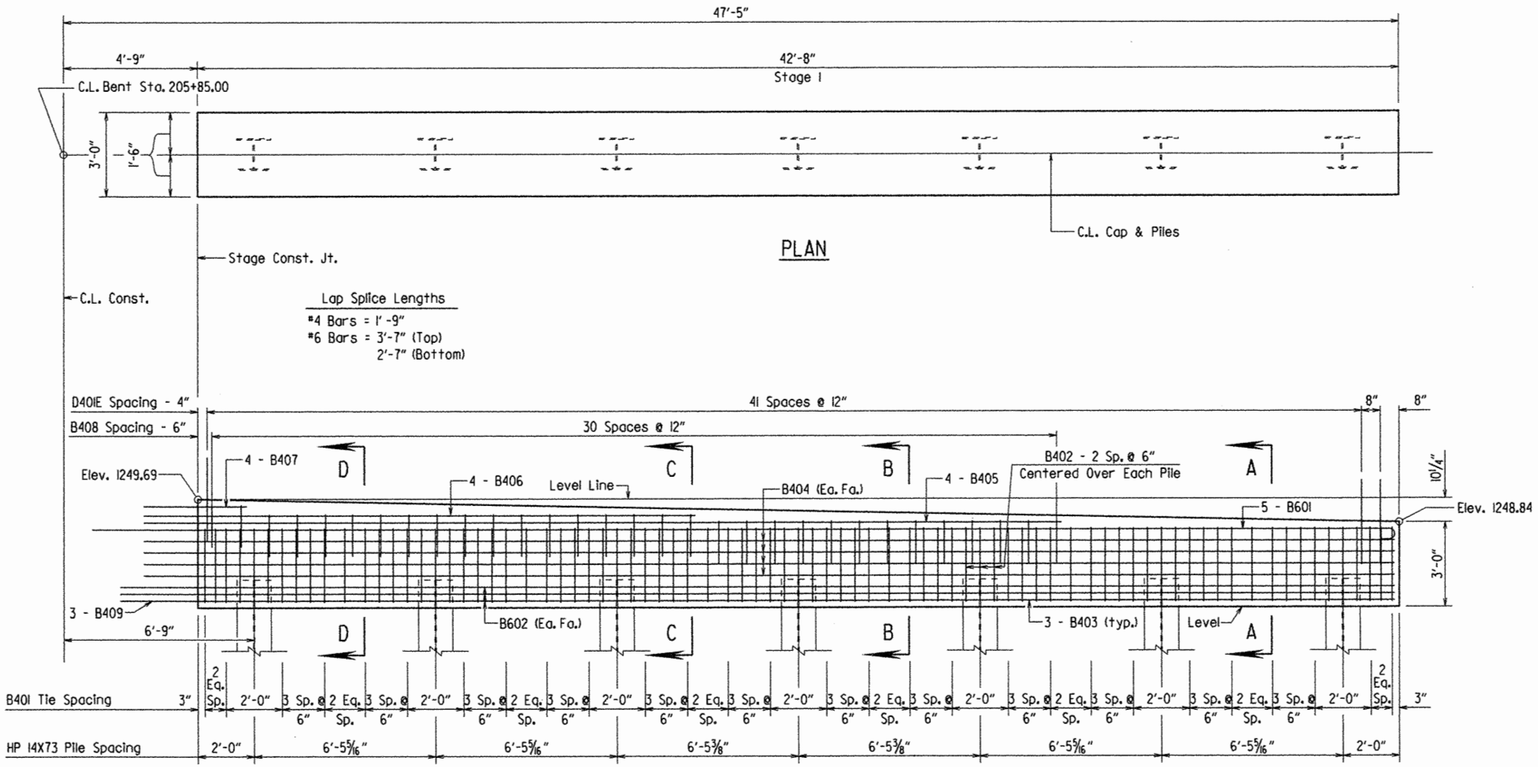


ELEVATION
LOOKING AHEAD

## BAR LIST - STAGE I

| MARK | NO. REQ'D. | LENGTH | P.D. |
|---|---|---|---|
| B401 | 60 | 11'-0" | 2" |
| B402 | 21 | 7'-10" | 2" |
| B403 | 18 | 5'-3" | Str. |
| B404 | 8 | 44'-5" | Str. |
| B405 | 4 | 32'-7" | Str. |
| B406 | 4 | 19'-7" | Str. |
| B407 | 4 | 3'-7" | Str. |
| B408 | 31 | 5'-6" | 2" |
| B409 | 3 | 3'-2" | Str. |
| | | | |
| *D401E | 86 | 3'-0" | Str. |
| | | | |
| B601 | 5 | 46'-11" | 4½" |
| B602 | 6 | 45'-3" | Str. |

BENDING DIAGRAMS

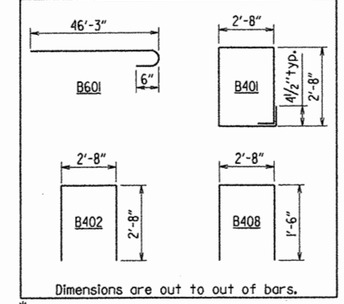


*D401E bars shall be epoxy coated and shall be measured and paid for as "Epoxy Coated Reinforcing Steel (Grade 60)."

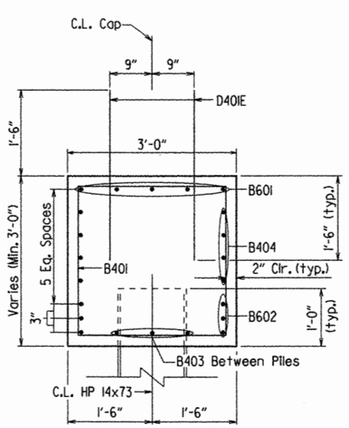


SECTION A-A
¾" = 1'-0"

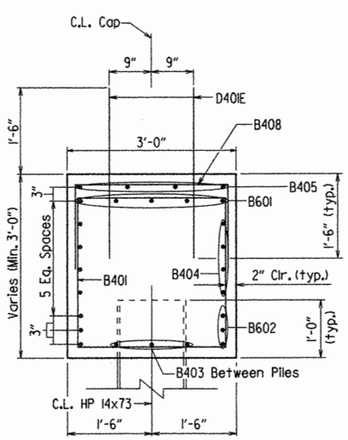


SECTION B-B
¾" = 1'-0"

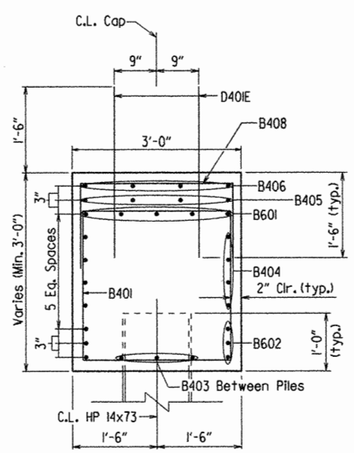


SECTION C-C
¾" = 1'-0"

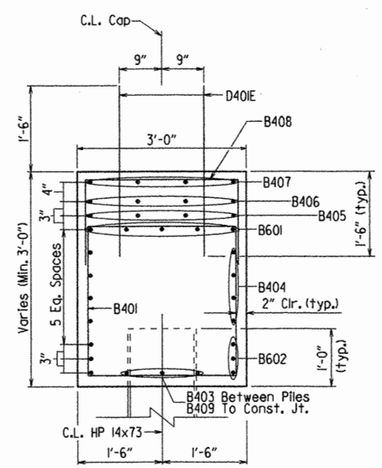


SECTION D-D
¾" = 1'-0"

GENERAL NOTES

All Concrete shall be Class "S" and shall be poured in the dry with a min. 28-day compression strength f'c = 3500 psi. All exposed corners to be chamfered ¾" unless otherwise noted.

All Reinforcing steel shall conform to AASHTO M31 or M53, Grade 60.

For details of pile encasement, see dwg. no. 14995A.

For additional information, See Layout.

STATE OF ARKANSAS
Carl J. Fuselier
REGISTERED PROFESSIONAL ENGINEER
No. 7510
9/1/11
CARL J. FUSELIER

BRIDGE ENGINEER

# DETAILS OF INTERMEDIATE BENT NO. 5
## STAGE I

ROUTE 265 SEC. 2

ARKANSAS STATE HIGHWAY COMMISSION

LITTLE ROCK, ARK.

| | | | |
|---|---|---|---|
| DRAWN BY: TMG | DATE: 6/3/2011 | FILENAME: | B040518X1_B1.DGN |
| CHECKED BY: BEF | DATE: 8/17/11 | SCALE: | ⅜" = 1'-0" OR AS NOTED |
| DESIGNED BY: TMG | DATE: 5/11 | | |

BRIDGE NO. 07229 DRAWING NO. 52409

| DATE REVISED | DATE FILMED | DATE REVISED | DATE FILMED | FED. ROAD DIST. NO. | STATE | FED. AID PROJ. NO. | SHEET NO. | TOTAL SHEETS |
|---|---|---|---|---|---|---|---|---|
| | | | | 6 | ARK. | | | |
| | | | | JOB NO. | | 040518 | 159 | 270 |
| | | | | (1) 07229 | | INT. BENT 5 | 52410 | |

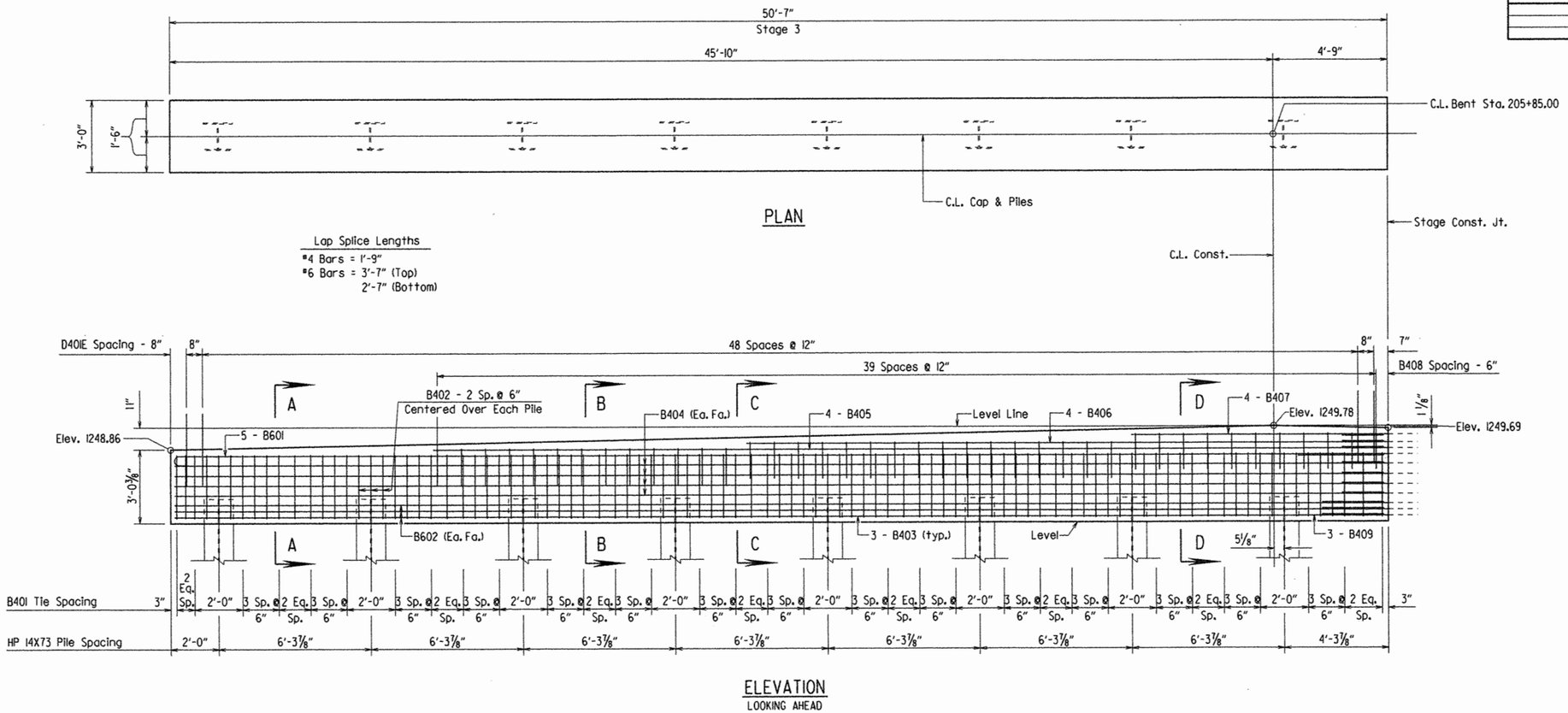


ELEVATION
LOOKING AHEAD

## BAR LIST - STAGE 3

| MARK | NO. REQ'D. | LENGTH | P.D. |
|---|---|---|---|
| B401 | 72 | 11'-0" | 2" |
| B402 | 24 | 7'-10" | 2" |
| B403 | 21 | 5'-2" | Str. |
| B404 | 8 | 50'-3" | Str. |
| B405 | 4 | 39'-6" | Str. |
| B406 | 4 | 26'-6" | Str. |
| B407 | 4 | 10'-6" | Str. |
| B408 | 40 | 5'-6" | 2" |
| B409 | 3 | 3'-7" | Str. |
| | | | |
| *D401E | 102 | 3'-0" | Str. |
| | | | |
| B601 | 5 | 50'-11" | 4 1/2" |
| B602 | 6 | 50'-3" | Str. |

BENDING DIAGRAMS

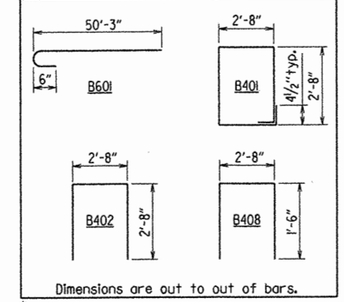


*D401E bars shall be epoxy coated and shall be measured and paid for as "Epoxy Coated Reinforcing Steel (Grade 60)."

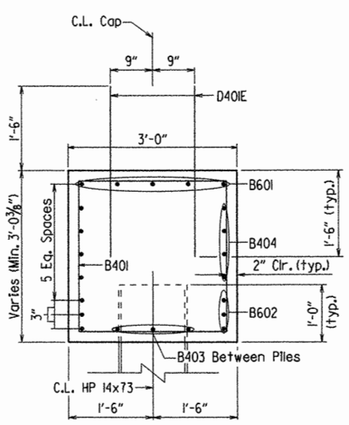


SECTION A-A
3/4" = 1'-0"

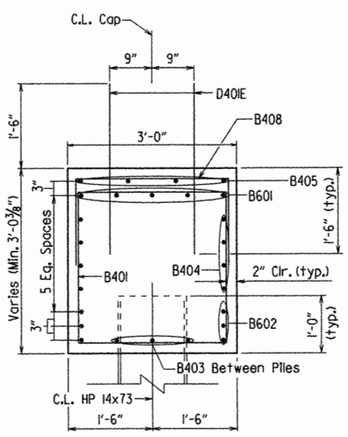


SECTION B-B
3/4" = 1'-0"

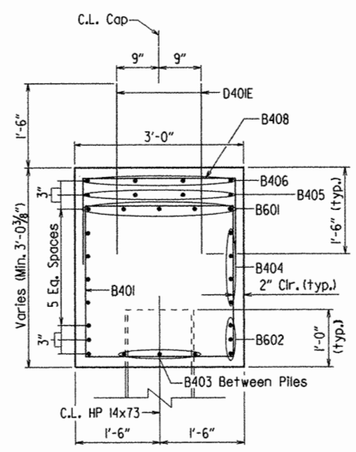


SECTION C-C
3/4" = 1'-0"

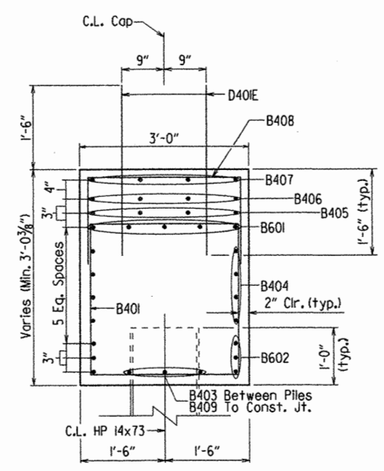


SECTION D-D
3/4" = 1'-0"

GENERAL NOTES

All Concrete shall be Class "S" and shall be poured in the dry with a min. 28-day compression strength f'c = 3500 psi. All exposed corners to be chamfered 3/4" unless otherwise noted.

All Reinforcing steel shall conform to AASHTO M31 or M53, Grade 60.

For details of pile encasement, see dwg. no. 14995A.

For additional information, See Layout.

STATE OF ARKANSAS
Carl B. Fuselier
REGISTERED PROFESSIONAL ENGINEER
No. 7510
9/6/11
CARL J. FUSELIER

BRIDGE ENGINEER

# DETAILS OF INTERMEDIATE BENT NO. 5
## STAGE 3

ROUTE 265 SEC. 2

ARKANSAS STATE HIGHWAY COMMISSION

LITTLE ROCK, ARK.

| | | | | | |
|---|---|---|---|---|---|
| DRAWN BY: | TMG | DATE: | 6/3/2011 | FILENAME: | B040518XI_BI.DGN |
| CHECKED BY: | BEF | DATE: | 8/17/11 | SCALE: | 3/8" = 1'-0" |
| DESIGNED BY: | TMG | DATE: | 5/11 | | OR AS NOTED |

BRIDGE NO. 07229 DRAWING NO. 52410

| DATE REVISED | DATE FILMED | DATE REVISED | DATE FILMED | FED. ROAD DIST. NO. | STATE | FED. AID PROJ. NO. | SHEET NO. | TOTAL SHEETS |
|---|---|---|---|---|---|---|---|---|
| | | | | 6 | ARK. | | | |
| | | | | JOB NO. | | 040518 | 160 | 270 |
| | | | | ① 07229 | | R.C. SLAB UNIT | | 52411 |

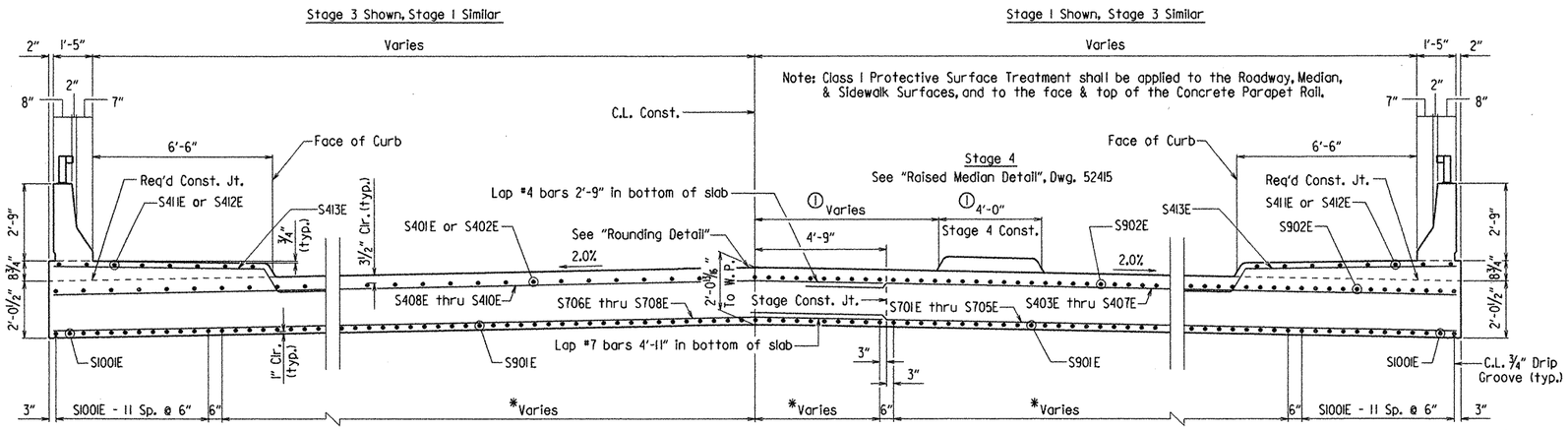


TYP. SECTION THROUGH ROADWAY @ MID-SPAN

Looking Ahead

TYP. SECTION THROUGH ROADWAY @ INT. BENTS

Looking Ahead

*For rebar spacing and placement, see Dwg. Nos. 52413 - 52414

① See Roadway Plans for Location and width of Median.

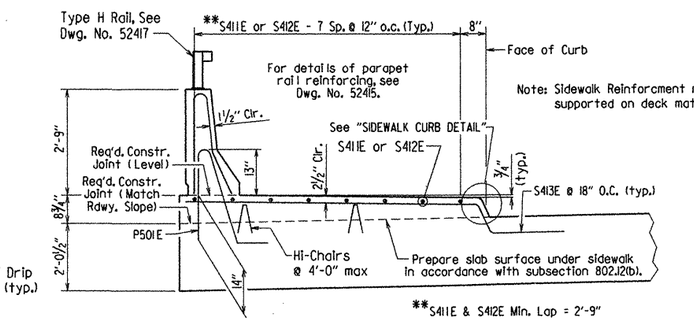


SIDEWALK DETAIL

Not to Scale

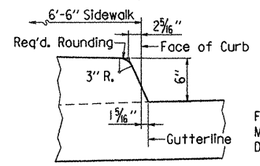


SIDEWALK CURB DETAIL

Not to Scale

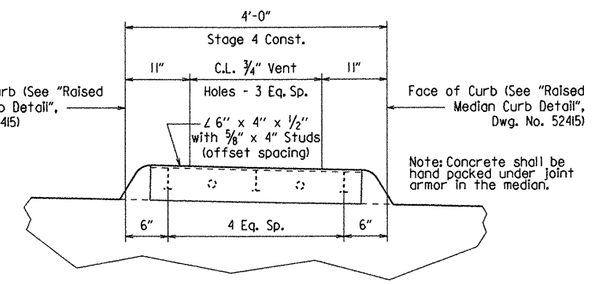


RAISED MEDIAN DETAIL AT JOINT

Not to Scale

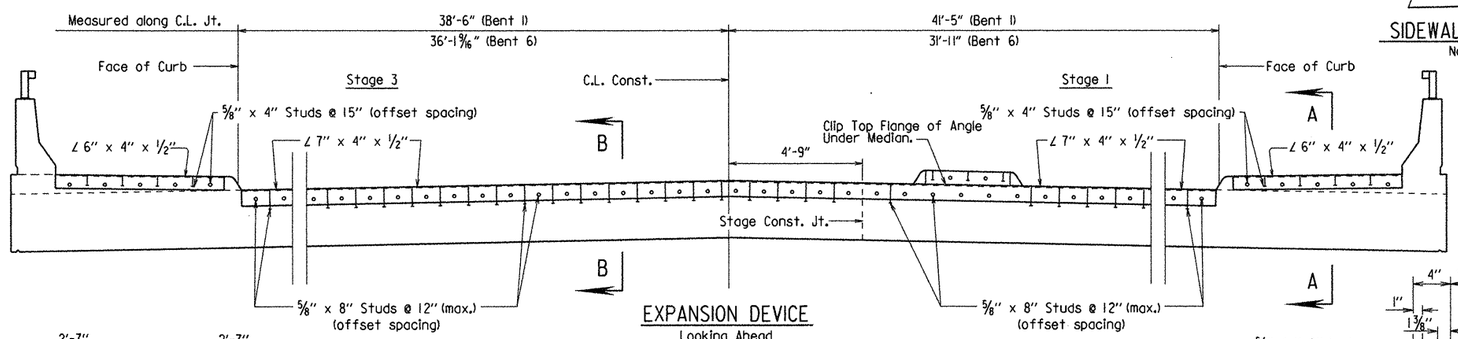


EXPANSION DEVICE

Looking Ahead

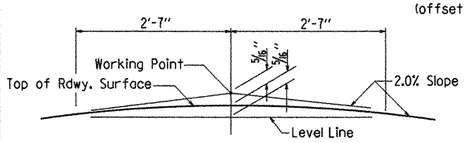


Note: Working Point matches Theoretical Roadway Grade.

ROUNDING DETAIL

No Scale

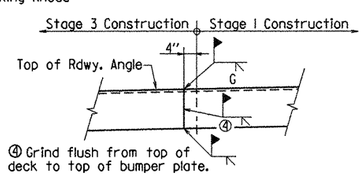


④ Grind flush from top of deck to top of bumper plate.

DETAIL OF WELD LOCATION FOR EXPANSION DEVICE

Looking Ahead

Not to Scale

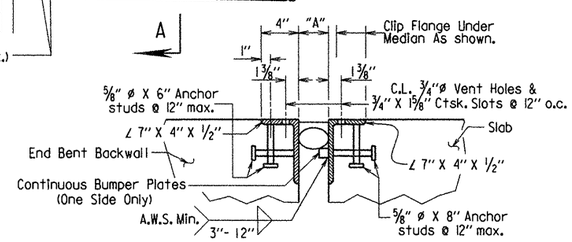


Note: Concrete shall be hand packed under the joint armor in the slab.

SECTION B-B

Not to Scale

Note: See Dwg. No. 52416 for additional joint details.

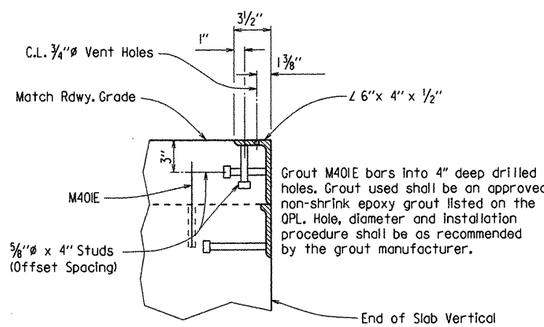


RAISED MEDIAN SECTION

No Scale

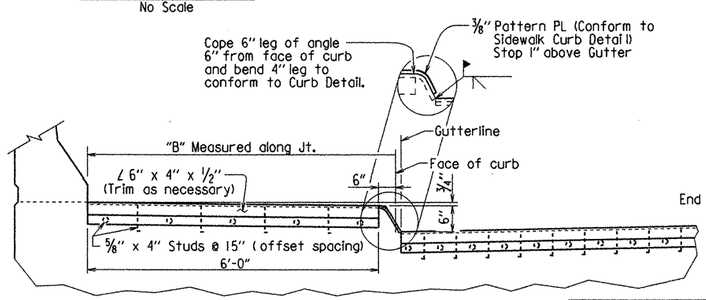


SIDEWALK JOINT DETAIL

Not to Scale

Note: Concrete shall be hand packed under the joint armor in the sidewalk. See Dwg. No. 52416 for additional details.

| | Dimension "B" | |
|---|---|---|
| | Stage 1 | Stage 3 |
| Bent 1 | 6'-6 1/16" | 6'-6" |
| Bent 6 | 6'-6 1/8" | 6'-6 1/16" |

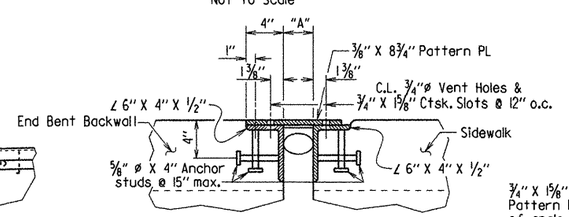


Note: Concrete shall be hand packed under the joint armor in the sidewalk.

SECTION A-A

Not to Scale

Note: See Dwg. No. 52416 for additional joint details.

3/4" X 1 5/8" Ctsk. Slots in 3/8" Pattern Plates. Tap 4" leg of angle for 5/8" ø Flat head Cap Screws @ 12" o.c. Install Screws in the Shop and ship as a unit. Remove screws on one side after erection is complete.

The surfaces of the 3/8" pattern PL, ∠ 7" X 4" X 1/2", and ∠ 6" X 4" X 1/2" not in contact with concrete shall be painted in accordance with Section 638 or as approved by the Engineer. Only one coat is required and shall be applied in the Fabricator's shop. Painting will not be paid for directly, but shall be considered subsidiary to "Structural Steel in Beam Spans (M270, Gr. 36)". Pattern Plate shall be A36 or as approved by the Engineer and shall be paid for as "Structural Steel in Beam Spans (M270, Gr. 36)".

STATE OF ARKANSAS
Carl J. Fuselier
REGISTERED PROFESSIONAL ENGINEER
No. 7510
9/1/11
CARL J. FUSELIER

BRIDGE ENGINEER

SHEET 1 OF 7

DETAILS OF 200'-0" CONTINUOUS R.C. SLAB UNIT

CLEAR CREEK

ROUTE 265 SEC. 2

ARKANSAS STATE HIGHWAY COMMISSION

LITTLE ROCK, ARK.

| | | | |
|---|---|---|---|
| DRAWN BY: TMG | DATE: 8/9/2011 | FILENAME: | B040518X1_S1.DGN |
| CHECKED BY: JGT | DATE: 8/15/11 | SCALE: | 3/8" = 1'-0" OR AS NOTED |
| DESIGNED BY: TMG | DATE: 5/11 | | |

BRIDGE NO. 07229 DRAWING NO. 52411

| DATE REVISED | DATE FILMED | DATE REVISED | DATE FILMED |
|---|---|---|---|
| 3-25-2013 | | | |
| | | | |

| FED. ROAD DIST. NO. | STATE | FED. AID PROJ. NO. | SHEET NO. | TOTAL SHEETS |
|---|---|---|---|---|
| 6 | ARK. | | | |
| JOB NO. | | 040518 | 161 | 270 |
| ① 07229 | | R.C. SLAB UNIT | | 52412 |

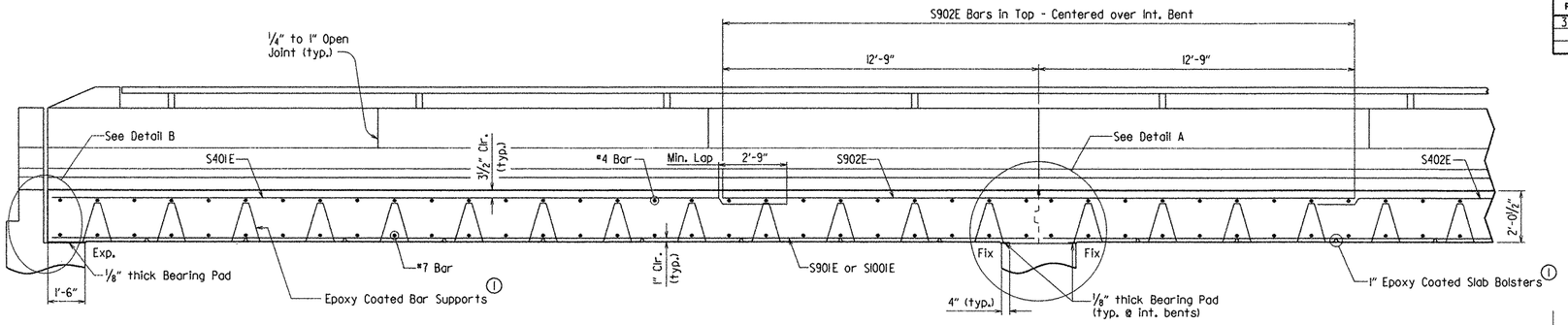


① Size and spacing shall be sufficient to support reinforcing under all construction activities without deforming.

## LONGITUDINAL SECTION ALONG C.L. BRIDGE

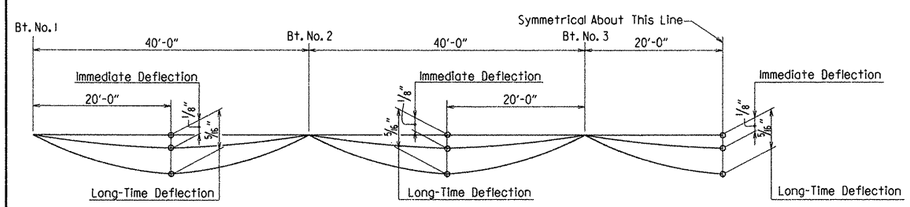


## DEAD LOAD DEFLECTION DIAGRAM

No Scale

Deflections shown are from a chord from C.L. bent to C.L. bent. Vertical alignment corrections are not included. Tolerance + 1/4" for camber and vertical alignment.

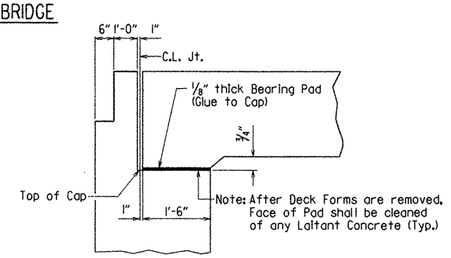


## DETAIL B

Not to Scale

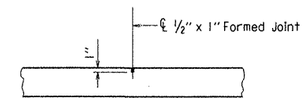


Use 1/2" x 1" Type 3, 4, or 6 Joint Sealer. See subsections 501.02 (h) and 501.05 (j). Backer Rod filler will not be required. Joint sealer shall be measured and paid for as Class S(AE) Concrete-Bridge. This joint shall be formed.

## LONGITUDINAL CONSTRUCTION JOINT DETAIL

Not to Scale

## BAR LIST ②

| MARK | NUMBER REQUIRED STAGE 1 | NUMBER REQUIRED STAGE 3 | LENGTH | P.D. |
|---|---|---|---|---|
| S401E | 93 | 103 | 29'-9" | Str. |
| S402E | 140 | 156 | 20'-0" | Str. |
| S403E | 27 | - | 50'-6" to 52'-1" | Str. |
| S404E | 27 | - | 48'-9" to 50'-5" | Str. |
| S405E | 27 | - | 47'-1" to 48'-9" | Str. |
| S406E | 27 | - | 44'-11" to 47'-0" | Str. |
| S407E | 27 | - | 42'-8" to 44'-11" | Str. |
| S408E | - | 81 | 51'-0" | Str. |
| S409E | - | 27 | 49'-11" to 51'-1" | Str. |
| S410E | - | 27 | 48'-8" to 49'-10" | Str. |
| S411E | 16 | 16 | 41'-3" | Str. |
| S412E | 24 | 24 | 42'-9" | Str. |
| S413E | 135 | 135 | 10'-8" | 3" |
| S701E | 27 | - | 52'-8" to 54'-3" | Str. |
| S702E | 27 | - | 50'-11" to 52'-7" | Str. |
| S703E | 27 | - | 49'-3" to 50'-11" | Str. |
| S704E | 27 | - | 47'-1" to 49'-3" | Str. |
| S705E | 27 | - | 44'-10" to 47'-1" | Str. |
| S706E | - | 81 | 51'-0" | Str. |
| S707E | - | 27 | 49'-11" to 51'-1" | Str. |
| S708E | - | 27 | 48'-8" to 49'-10" | Str. |
| S901E | 402 | 453 | 39'-8" | Str. |
| S902E | 367 | 411 | 25'-6" | Str. |
| S1001E | 60 | 60 | 39'-8" | Str. |

BENDING DIAGRAMS
(Dimensions are out to out of bars.)

Note: Bar designations with "E" suffix are Epoxy Coated

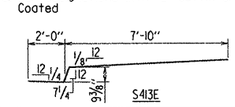


② See Dwg. No. 52415 for Parapet and Median Barlist.

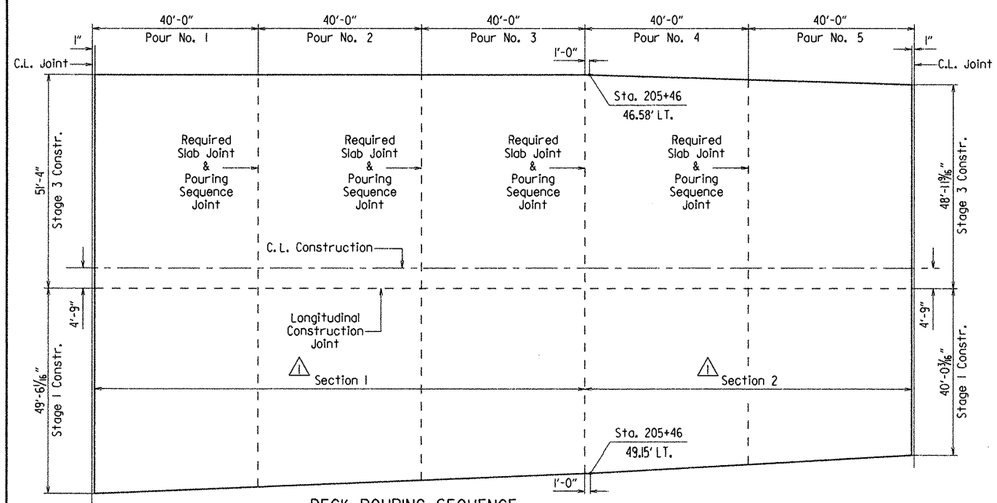


## DECK POURING SEQUENCE

Not to Scale

Notes: For each stage of construction, the Contractor shall pour the slab unit in sections according to the pouring sequence shown. No part of the falsework for the entire unit shall be removed until all of the concrete in the complete bridge deck slab has been placed and cured. All pours shall begin at one end of the bridge and proceed in sequence to the other end of the bridge. 72 hours shall elapse between the end of a pour and the start of the next pour for each stage of construction. Concrete in the bridge superstructure shall be placed and consolidated for the entire pour before any concrete has taken its initial set. No railing or sidewalk pours shall be made before the entire bridge slab for each stage has been poured. No railing pours shall be placed before all sidewalk pours for each stage has been placed. 72 hours shall elapse between the end of deck pour 5 and the start of a sidewalk pour. 72 hours shall elapse between the end of a sidewalk pour and the start of a parapet railing pour. The Contractor must obtain approval from the Engineer for any deviation from the pouring sequence shown and for any railing and sidewalk pours made before the entire bridge slab for each stage has been poured.

Notes: For each stage of construction, the Contractor shall pour the slab unit in sections according to the pouring sequence shown. No part of the falsework for the entire unit shall be removed until all of the concrete in the complete bridge deck slab has been placed and cured. Falsework for span 3 shall remain in place until after section 2 is placed and cured. All pours shall begin at one end of the bridge and proceed in sequence to the other end of the bridge. 72 hours shall elapse between the end of a pour and the start of the next pour for each stage of construction. Concrete in the bridge superstructure shall be placed and consolidated for the entire pour before any concrete has taken its initial set. No railing or sidewalk pours shall be made before the entire bridge slab for each stage has been poured. No railing pours shall be placed before all sidewalk pours for each stage has been placed. 72 hours shall elapse between the end of deck pour 5 and the start of a sidewalk pour. 72 hours shall elapse between the end of a sidewalk pour and the start of a parapet railing pour. The Contractor must obtain approval from the Engineer for any deviation from the pouring sequence shown and for any railing and sidewalk pours made before the entire bridge slab for each stage has been poured.

Use Type 3, 4, or 6 Joint Sealer. See subsections 501.02 (h) and 501.05 (j). Backer Rod filler will not be required. Joint Sealer shall be measured and paid for as Class S(AE) Concrete-Bridge. Slab joints shall extend to the outside edge of the deck slab, and across the top of sidewalk and raised median area. Slab joints shall be installed before the sidewalk and parapet railings are poured. If slab joints are to be sawed, they shall be sawed as soon as the concrete has sufficiently set to allow sawing of the joint without damage to the slab. Slab joints shall be placed at all pouring sequence construction joints and required slab joint locations. No joint sealer shall be placed on the deck slab under the sidewalk or median areas. The joint sealer shall extend across the deck slab and across the top of the sidewalk and median. Slab joints shall align with parapet open joints.

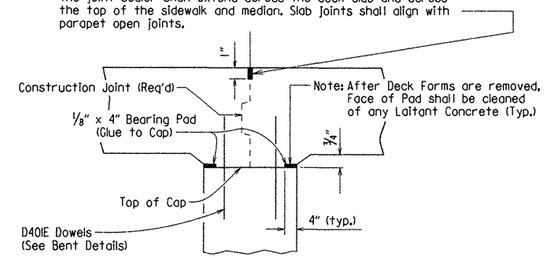


Note: Joint to be cleaned by sandblasting or other approved method before pouring joint sealer.

## DETAIL A

Not to Scale

Revised pouring sequence note TMG - 3/25/2013

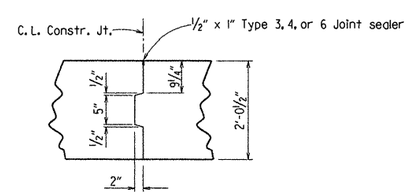


## DECK SLAB CONSTR. JT. DETAIL

Not to Scale

STATE OF ARKANSAS
Carl E. Russell
REGISTERED PROFESSIONAL ENGINEER
No. 7510
3/26/13
CARL E. RUSSELL

BRIDGE ENGINEER

SHEET 2 OF 7
DETAILS OF 200'-0" CONTINUOUS
R.C. SLAB UNIT
CLEAR CREEK
ROUTE 265 SEC. 2
ARKANSAS STATE HIGHWAY COMMISSION
LITTLE ROCK, ARK.

| | | | |
|---|---|---|---|
| DRAWN BY: TMG | DATE: 8/9/2011 | FILENAME: | B040518X1_S1.DGN |
| CHECKED BY: JGT | DATE: 8/10/11 | SCALE: | 3/8" = 1'-0" OR AS NOTED |
| DESIGNED BY: TMG | DATE: 4/11 | | |

BRIDGE NO. 07229 DRAWING NO. 52412

| DATE REVISED | DATE FILMED | DATE REVISED | DATE FILMED | FED. ROAD DIST. NO. | STATE | FED. AID PROJ. NO. | SHEET NO. | TOTAL SHEETS |
|---|---|---|---|---|---|---|---|---|
| | | | | 6 | ARK. | | | |
| | | | | JOB NO. | | 040518 | 162 | 270 |
| | | | | (1) 07229 | | R.C. SLAB UNITS | | 52413 |

(1) Lap #7 Bars 4'-11"

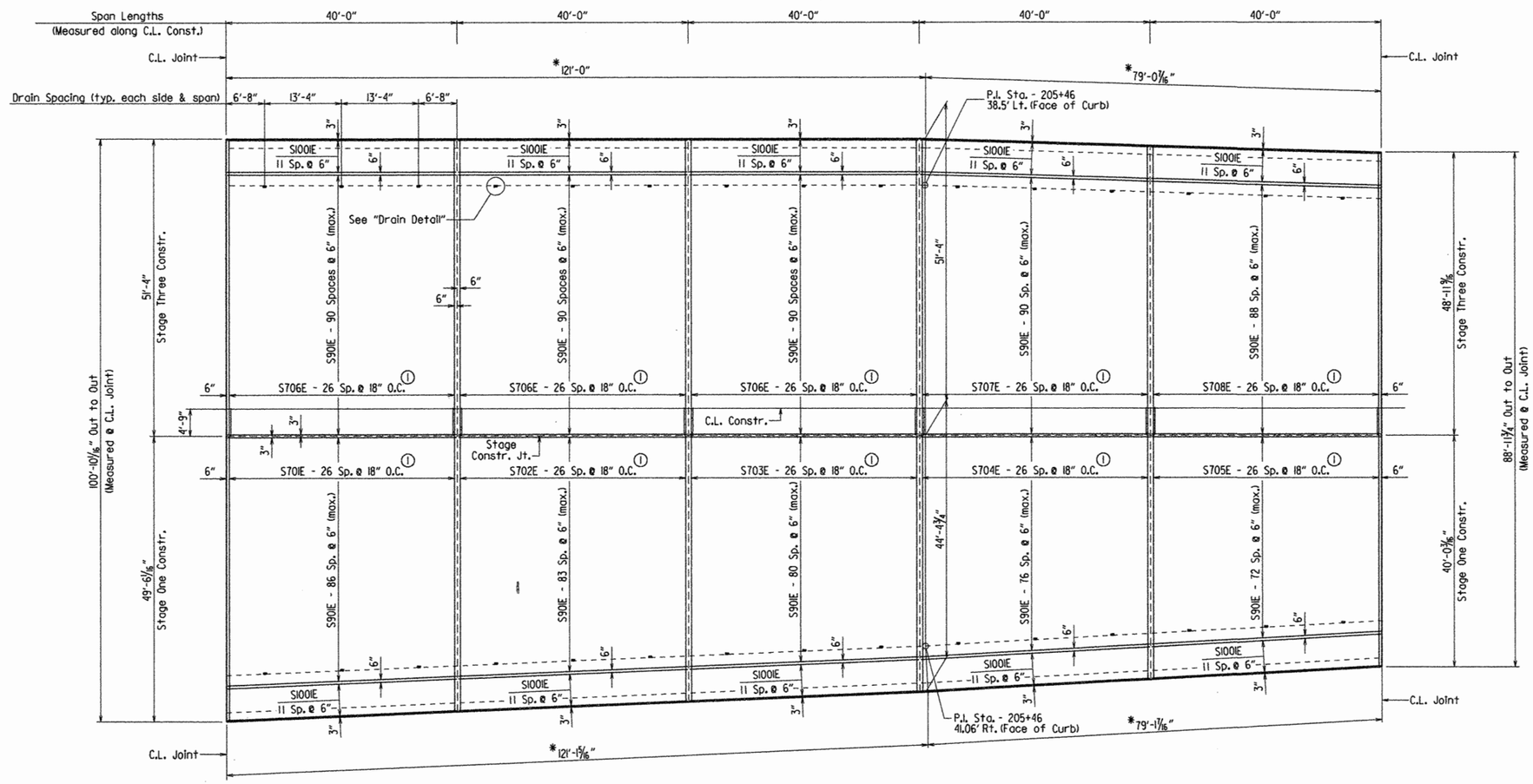


## REINFORCING PLAN - BOTTOM OF SLAB

*Measured along outside slab edge

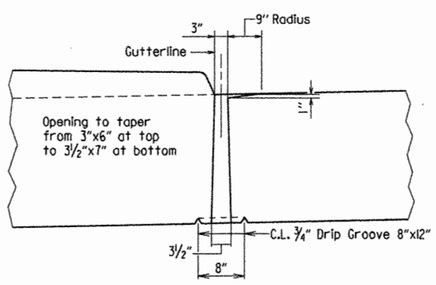


## DRAIN DETAIL

Note: Spread bars as required to clear drains.

STATE OF ARKANSAS
Carl L. Fuselier
REGISTERED PROFESSIONAL ENGINEER
No. 7510
9/1/11
CARL L. FUSELIER

BRIDGE ENGINEER

SHEET 3 OF 7
DETAILS OF 200'-0" CONTINUOUS
R. C. SLAB UNIT
CLEAR CREEK
ROUTE 265 SEC. 2
ARKANSAS STATE HIGHWAY COMMISSION
LITTLE ROCK, ARK.

DRAWN BY: TMG DATE: 8/9/2011 FILENAME: B040518X1_SL.DGN
CHECKED BY: JGT DATE: 8/15/11 SCALE: 3/32" = 1'-0"
DESIGNED BY: TMG DATE: 4/11

BRIDGE NO. 07229 DRAWING NO. 52413

| DATE REVISED | DATE FILMED | DATE REVISED | DATE FILMED | FED. ROAD DIST. NO. | STATE | FED. AID PROJ. NO. | SHEET NO. | TOTAL SHEETS |
|---|---|---|---|---|---|---|---|---|
| | | | | 6 | ARK. | | | |
| | | | | JOB NO. | | 040518 | 163 | 270 |
| | | | | (1) 07229 | | R.C. SLAB UNITS | 52414 | |

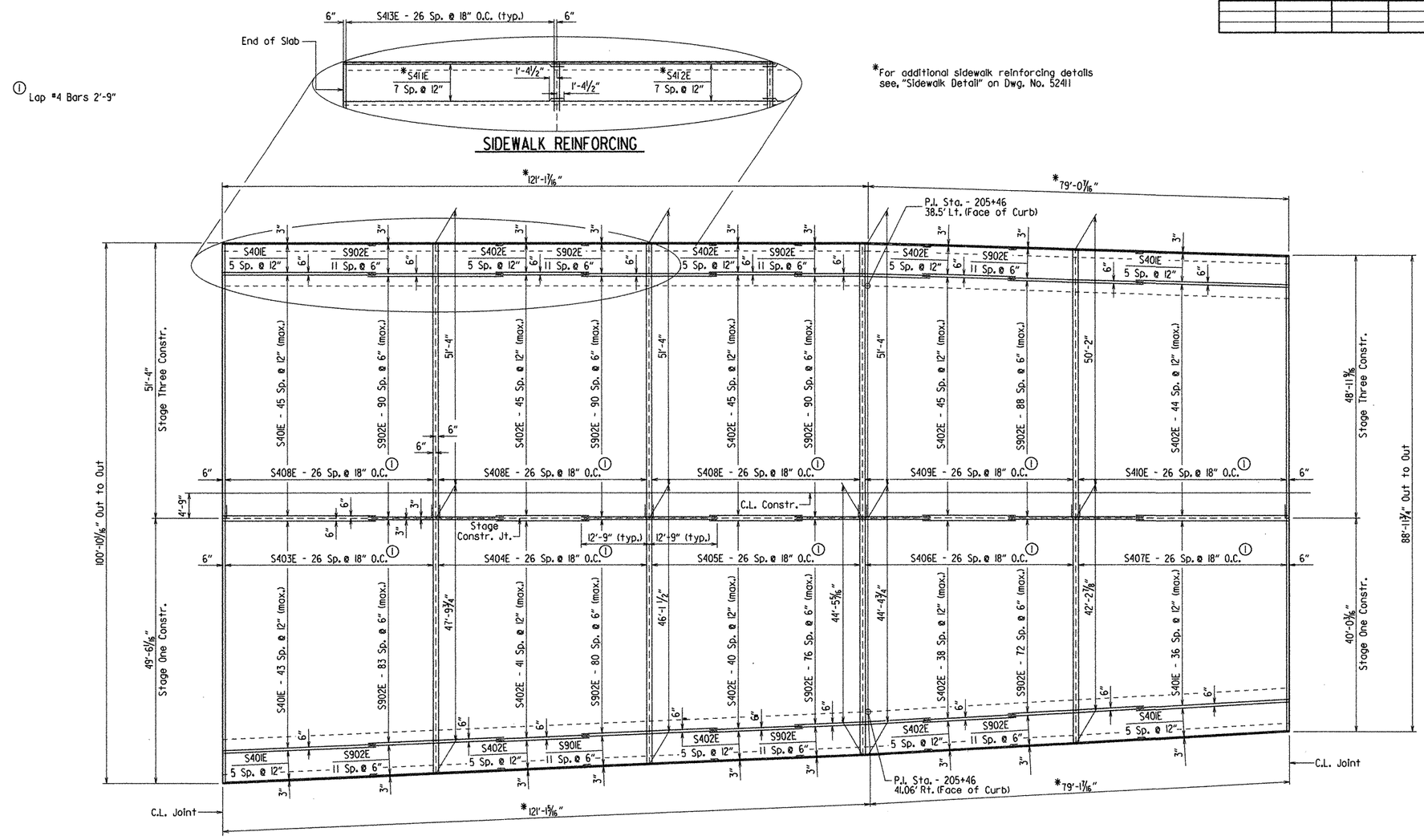


## REINFORCING PLAN - TOP OF SLAB

*Measured along outside slab edge

Note: For placement of deck drains, see, Dwg. No. 52413

STATE OF ARKANSAS
Carl J. Fuselier
REGISTERED PROFESSIONAL ENGINEER
No. 7510
9/1/11
CARL J. FUSELIER

BRIDGE ENGINEER

SHEET 4 OF 7
DETAILS OF 200'-0" CONTINUOUS
R. C. SLAB UNIT
CLEAR CREEK
ROUTE 265 SEC. 2
ARKANSAS STATE HIGHWAY COMMISSION
LITTLE ROCK, ARK.

DRAWN BY: TMG DATE: 8/9/2011 FILENAME: B040518XI_S1.DGN
CHECKED BY: JGT DATE: 8/19/11 SCALE: 3/32" = 1'-0"
DESIGNED BY: TMG DATE: 4/11

BRIDGE NO. 07229 DRAWING NO. 52414

| DATE REVISED | DATE FILMED | DATE REVISED | DATE FILMED | FED. ROAD DIST. NO. | STATE | FED. AID PROJ. NO. | SHEET NO. | TOTAL SHEETS |
|---|---|---|---|---|---|---|---|---|
| | | | | 6 | ARK. | | | |
| | | | | JOB NO. | | 040518 | 164 | 270 |
| | | | | ① | 07229 | R.C. SLAB UNIT | | 52415 |

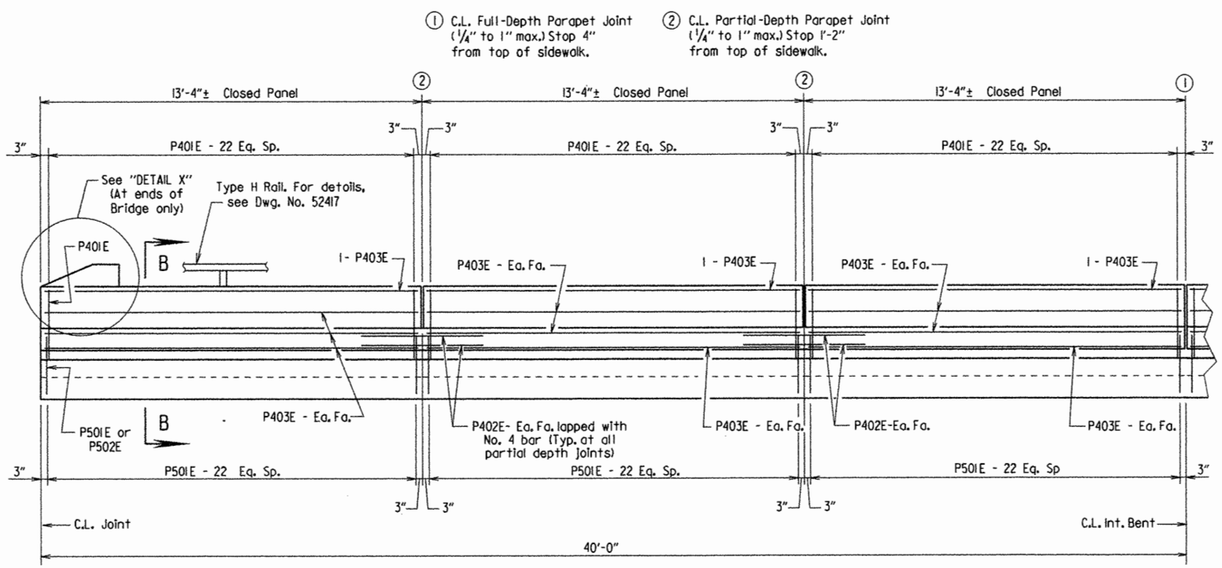


## DETAILS OF PARAPET RAIL

Not to Scale

Place Type D Bridge Name Plate on front face of span rail approx. 2'-0" from beginning of bridge (Right side of roadway only)

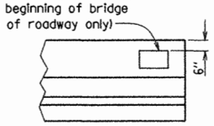


## NAME PLATE DETAIL

No Scale

## BAR LIST

| MARK | NUMBER REQUIRED STAGE 1 | STAGE 3 | STAGE 4 | LENGTH | P.D. |
|---|---|---|---|---|---|
| P401E | 345 | 345 | - | 5'-6" | 2" |
| P402E | 40 | 40 | - | 5'-0" | Str. |
| P403E | 105 | 105 | - | 13'-0" | Str. |
| P404E | 6 | 6 | - | 5'-2" | 3" |
| P405E | 2 | 2 | - | 3'-10" | 2" |
| P501E | 345 | 345 | - | 6'-0" | 2 1/2" |
| M401E | - | - | 268 | 3'-0" | 2" |
| M402E | - | - | 8 | 41'-3" | Str. |
| M403E | - | - | 12 | 42'-9" | Str. |

BENDING DIAGRAMS (Dimensions are out to out of bars.)

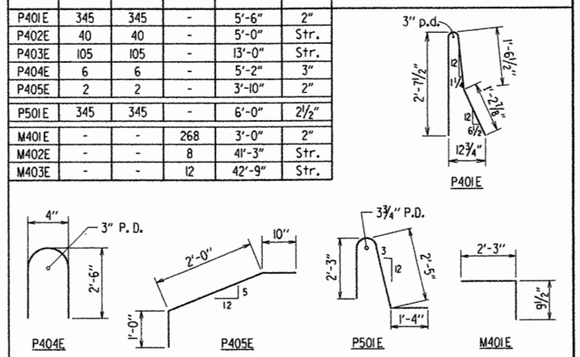


Note: Bar designations with "E" suffix are epoxy coated.

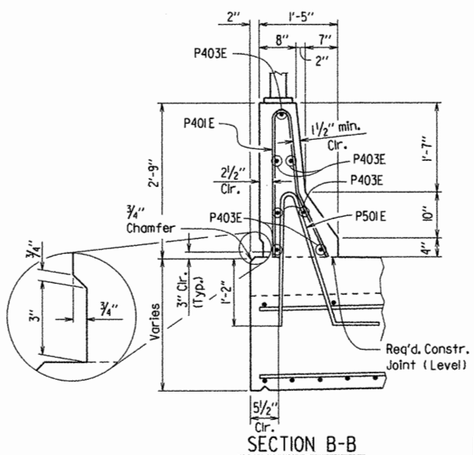


## SECTION B-B

Not to Scale

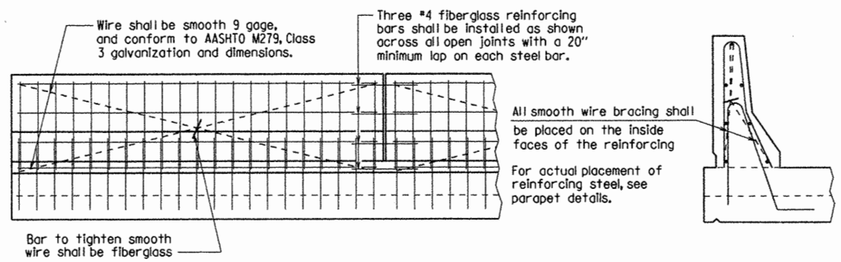


All panels shall be braced as required to prevent racking. All open joints shall be sawed as soon as practical to a minimum width of 1/4". To control cracking before sawing all joints must be grooved before the concrete is set. Sawing of the joints must be controlled so it will follow the grooved joint.

The extruded parapet shall conform to the horizontal and vertical lines shown on the plans or as directed by the Engineer and shall present a smooth, uniform appearance and texture. Exposed surfaces may be given a light brush finish or a Class 3, Textured Coating Finish, in place of Class 2, Rubbed Finish.

## DETAILS OF OPTIONAL SLIPFORMING OF CONCRETE PARAPET RAIL

No to Scale

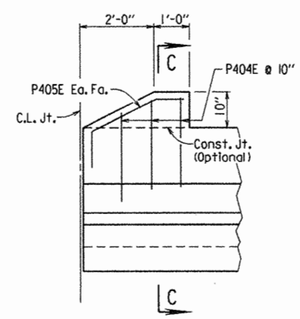


## DETAIL X

Not to Scale

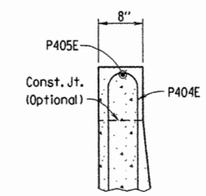


## SECTION C-C

Not to Scale

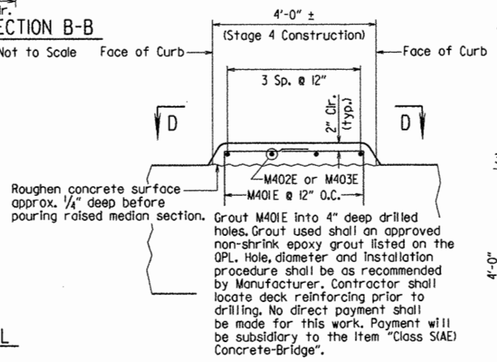


Grout M401E into 4" deep drilled holes. Grout used shall an approved non-shrink epoxy grout listed on the QPL. Hole, diameter and installation procedure shall be as recommended by Manufacturer. Contractor shall locate deck reinforcing prior to drilling. No direct payment shall be made for this work. Payment will be subsidiary to the item "Class S(AE) Concrete-Bridge".

## RAISED MEDIAN DETAIL

Not to Scale

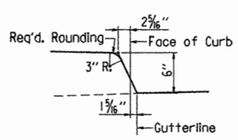


## RAISED MEDIAN CURB DETAIL

Not to Scale

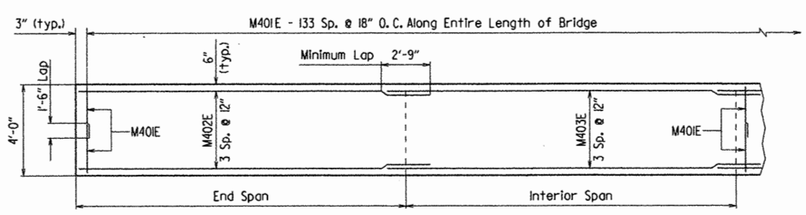


## VIEW D-D

Not to Scale

STATE OF ARKANSAS
Carl J. Fusselier
REGISTERED PROFESSIONAL ENGINEER
No. 7510
7/1/11
CARL J. FUSELIER

BRIDGE ENGINEER

SHEET 5 OF 7
DETAILS OF 200'-0" CONTINUOUS
R.C. SLAB UNIT
CLEAR CREEK
ROUTE 265 SEC. 2
ARKANSAS STATE HIGHWAY COMMISSION
LITTLE ROCK, ARK.

DRAWN BY: TMG DATE: 8/9/11 FILENAME: B040518XI_SI.DGN
CHECKED BY: JGT DATE: 8/15/11 SCALE: AS NOTED
DESIGNED BY: TMG DATE: 4/11

BRIDGE NO. 07229 DRAWING NO. 52415

| DATE REVISED | DATE FILMED | DATE REVISED | DATE FILMED | FED. ROAD DIST. NO. | STATE | FED. AID PROJ. NO. | SHEET NO. | TOTAL SHEETS |
|---|---|---|---|---|---|---|---|---|
| | | | | 6 | ARK. | | | |
| | | | | JOB NO. | | 040518 | 165 | 270 |
| | | | | 1 | 07229 | R.C. SLAB UNIT | 52416 | |

## GENERAL NOTES

CONSTRUCTION SPECIFICATIONS: Arkansas State Highway and Transportation Department Standard Specifications for Highway Construction, 2003 edition, with applicable supplemental specifications and special provisions. Unless otherwise noted in the plans Section and Subsection refer to the Standard Construction Specifications.

DESIGN SPECIFICATIONS: AASHTO LRFD Bridge Design Specifications Fifth Ed. (2010), with 2010 interim Specifications.

LIVE LOADING: HL-93

MATERIALS AND STRENGTHS:

| | |
|---|---|
| Class S(AE) Concrete | f'c = 4,000 psi |
| Reinforcing Steel (AASHTO M31 or M53, Gr. 60) | fy = 60,000 psi |
| Structural Steel (AASHTO M270 Gr. 36) | Fy = 36,000 psi |

CONCRETE: Concrete shall be poured in the dry and all exposed corners are to be chamfered ¾" unless otherwise noted. All concrete shall be Class S(AE) Concrete with a minimum 28 Day Compressive strength of f'c = 4,000 psi.

Concrete in bridge superstructure shall be placed, consolidated, and screeded off for the entire pour before any concrete has taken its initial set. This may require the use of a retarding agent.

The concrete deck between curbs shall be given a tine finish in accordance with subsection 802.19 for Class 5 Tined Bridge Roadway Surface Finish. Sidewalks and median shall be given a Class 6 Broomed Finish. Movement of the finishing machine across new concrete shall be on planks placed on the surface and shall be prohibited for 72 hours after finishing the pour.

BEARING PAD: The 1/8" bearing pad shall be an unreinforced pad meeting the requirements of Section 808, or shall be nylon reinforced neoprene meeting the requirements of subsection 807.20. The pad shall be furnished in one piece for the required width and full length of the bearing and glued to the bent cap with an adhesive approved by the Engineer. Pad and adhesive will not be paid for directly, but will be considered subsidiary to the item "Class S(AE) Concrete".

REINFORCING STEEL: All reinforcing steel shall conform to AASHTO M31 or M53, Gr. 60. The reinforcing steel is to be accurately located in the forms and firmly held in place by steel wire supports, sufficient in number and size to prevent displacement during the course of construction. The wire supports will not be paid for directly, but will be considered subsidiary to the item "Epoxy Coated Reinforcing Steel – Bridge (Gr. 60)".

STRUCTURAL STEEL: All structural steel shall be AASHTO M270, Gr. 36 unless otherwise noted and shall be paid for as "Structural Steel in Beam Spans (M270, Gr. 36)". All exposed surfaces shall be cleaned in accordance with subsection 807.84(e) unless otherwise noted.

Drawings show general features of design only. Shop drawings shall be made in accordance with the specifications, submitted and approval secured before fabrication is begun.

Requests for substitution of structural steel shapes shown with shapes of greater size must be submitted by the Contractor to the Engineer for approval. Steels of equal or greater strengths will be accepted only when shown on the approved shop drawings. Payment will be based on the basis of shapes and materials shown in the plans, and no additional compensation will be made for any adjustments due to substitutions.

All welding that is done during the fabrication of the structural steel, including temporary welds, shall be detailed on the shop drawings with detailed drawings shall be submitted to the Engineer for approval. If additional welds are required, whether permanent or temporary, a formal request with detailed drawings shall be submitted to the Engineer for approval; however, additional welds used for attaching false work support devices or screed rail supports to the structural steel that do not exceed the limitations of subsection 802.13 will not require approval prior to construction. All welding shall conform to subsection 807.26.

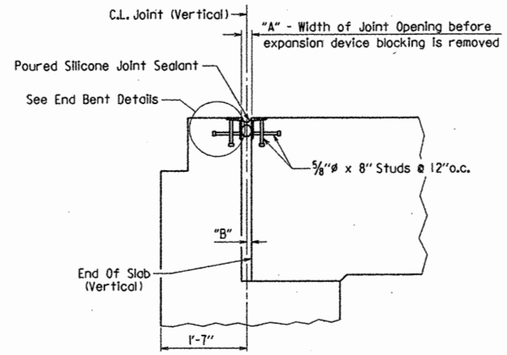


SECTION THRU JOINT AT END BENTS

Not to Scale

Note: Concrete shall be hand packed under the joint armor in the backwall and in the span.

## SILICONE JOINT DATA

| "A" Width Perpendicular to Joint at 24 Hour Average Temperature* Of: | | | "B" Perpendicular to Joint at 60°F | "D" | Bumper Plate Size |
|---|---|---|---|---|---|
| 40°F | 60°F | 80°F | | | |
| 2 1/8" | 2" | 1 7/8" | 1" +/- | 5 1/2" | 1" X 1" |

*The temperature used to set the joint opening shall be the approximate average air temperature during the 24 hour period immediately before the bolts are tightened. The Engineer shall establish the temperature.

Note: The temperature limitations recommended by the sealant manufacturer shall be observed.

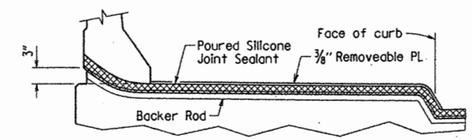


JOINT SEAL PLACEMENT AT SIDEWALK & PARAPET

Not to Scale

Note: Install seal in slab joint and parapet joint with damming procedure as recommended by the manufacturer. The sealant shall be recessed to prevent damage and be allowed to cure prior to removal of the outer damming material.

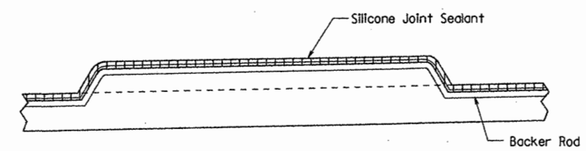


JOINT SEAL PLACEMENT AT RAISED MEDIAN

Not to Scale

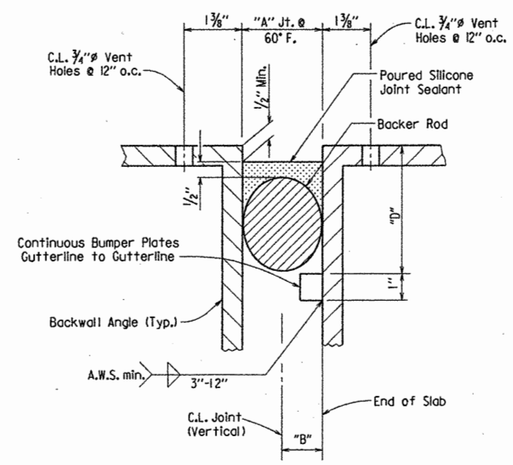


Note: Backer rods shall be extended beyond length of poured joint in Stage 1 so that the two pieces can be properly joined together prior to installing sealant for Stage 3. Manufacturer's recommendations shall be followed to prevent sealant from "running out of the joint" during stage construction.

DETAIL OF POURED SILICONE JOINT

Not to Scale

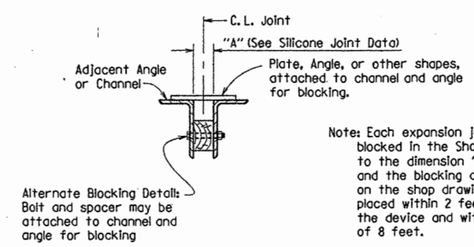


Note: Each expansion joint device shall be blocked in the Shop by the Fabricator to the dimension "A" shown for 60° F and the blocking details shall be shown on the shop drawings. Blocking shall be placed within 2 feet of each end of the device and with a maximum spacing of 8 feet.

DETAILS FOR BLOCKING EXPANSION JOINT DEVICE

No Scale

STATE OF ARKANSAS
Carl J. Fussler
REGISTERED PROFESSIONAL ENGINEER
No. 7510
9/1/11
CARL J. FUSSLER

BRIDGE ENGINEER

SHEET 6 OF 7

DETAILS OF 200'-0" CONTINUOUS R. C. SLAB UNIT

CLEAR CREEK

ROUTE 265 SEC. 2

ARKANSAS STATE HIGHWAY COMMISSION

LITTLE ROCK, ARK.

| | | | |
|---|---|---|---|
| DRAWN BY: TMG | DATE: 8/9/2011 | FILENAME: | B040518X1_SLDGN |
| CHECKED BY: JGT | DATE: 8/15/11 | SCALE: | AS NOTED |
| DESIGNED BY: TMG | DATE: 4/11 | | |

BRIDGE NO. 07229 DRAWING NO. 52416

| DATE REVISED | DATE FILMED | DATE REVISED | DATE FILMED | FED. ROAD DIST. NO. | STATE | FED. AID PROJ. NO. | SHEET NO. | TOTAL SHEETS |
|---|---|---|---|---|---|---|---|---|
| | | | | 6 | ARK. | | | |
| | | | | JOB NO. | | 040518 | 166 | 270 |
| | | | | 07229 | | R.C. SLAB UNIT | 52417 | |

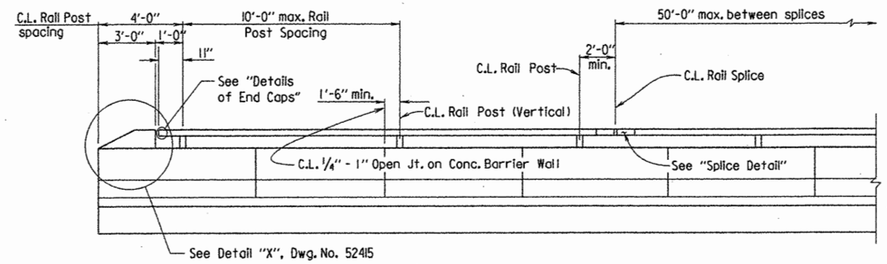


## RAIL POST SPACING DETAIL

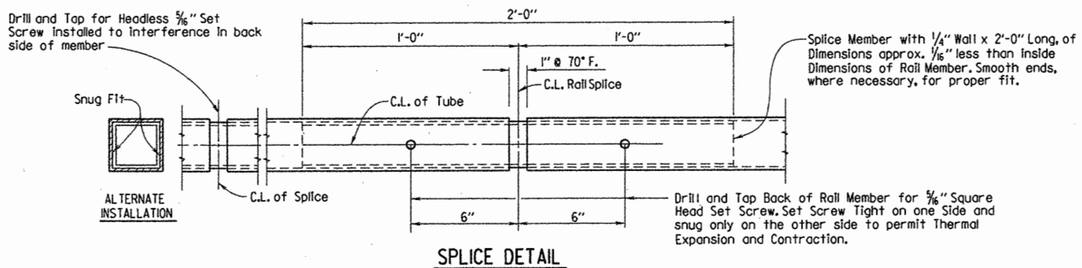


## SPLICE DETAIL

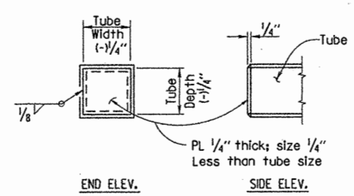


## DETAILS OF END CAPS

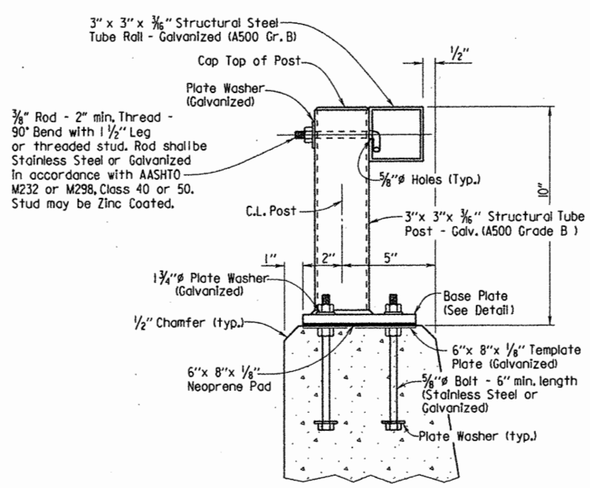


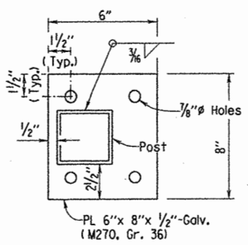


## DETAILS OF POST ANCHOR SYSTEM
(CAST IN PLACE BOLTS)

NOTES FOR BRIDGE RAILING:

Rail layout shall conform to vertical and horizontal alignment of bridge.

Maximum post spacing = 10'-0"

Minimum distance from centerline post to centerline open or contraction joints in parapet = 1'-6".

Rail splices shall be at 50' maximum spacing. Centerline splices shall be located at a maximum of 2 feet from centerline of post. Rail sections shall be fabricated to attach to at least three posts.

Base plates shall not be placed upon areas that are improperly finished, deformed or irregular.

Bridge railing, including posts, fasteners, template plates, and neoprene pad shall be paid for at the contract unit price bid per linear foot for "Metal Bridge Railing (Type H)".

Shop drawings showing details of railing shall be submitted and approval secured before fabrication is begun.

MATERIALS:

Tubing, Posts, and Accessories: AASHTO M270, Gr. 36 or ASTM A500-Grade B.

Railing End Caps: AASHTO M270, Grade 36, galvanized.

Steel Rail Members shall be galvanized in accordance with AASHTO M 111 after fabrication.

Cast in place anchor bolts shall be of stainless steel or high strength steel. Stainless steel anchor bolts shall conform to ASTM A193 or A320-Grade B8 with a minimum yield strength of 80,000 psi. High strength steel anchor bolts shall conform to AASHTO M164 or A354-Grade BC galvanized in accordance with AASHTO M232 or M298, Class 40 or 50.

Splice Set Screws: Stainless steel, ASTM Specifications A193 or A320-Grade B8, or AASHTO M270, Grade 36, galvanized.

Nuts: Nuts shall conform to AASHTO M292, Gr. 8 (Stainless steel) or galvanized in accordance with AASHTO M232 or M298, Class 40 or 50.

Threads: Threads on bolts, screws, and nuts shall conform to American Standard Coarse Series, Class 2 FIT, ASA Specification B1.1.

Washers shall conform to AASHTO M293, galvanized in accordance with AASHTO M232 or M298, Class 40 or 50, or of stainless steel conforming to ASTM A276 or A167-Type 302.

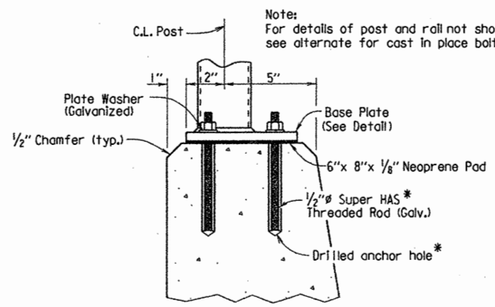


*HILTI HIT RE 500 Epoxy Adhesive Anchor System with 4 1/2" embedment or an approved equal.

The HILTI Epoxy Adhesive Anchor System shall be installed in accordance with Manufacturer's recommendations.

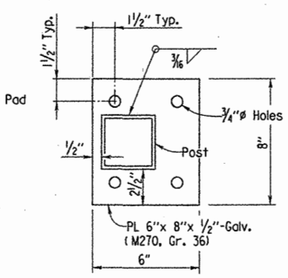


BASE PLATE

## DETAILS OF ALTERNATE POST ANCHOR SYSTEM
(EPOXY ADHESIVE ANCHORS)

STATE OF ARKANSAS
Carl J. Fuselier
REGISTERED PROFESSIONAL ENGINEER
No. 7510
9/1/11
CARL J. FUSELIER

BRIDGE ENGINEER

SHEET 7 OF 7
DETAILS OF 200'-0" CONTINUOUS
R.C. SLAB UNIT
CLEAR CREEK
ROUTE 265 SEC. 2
ARKANSAS STATE HIGHWAY COMMISSION
LITTLE ROCK, ARK.

DRAWN BY: TMG DATE: 8/9/2011 FILENAME: B040518X1.SL.DGN
CHECKED BY: JGT DATE: 8/16/11 SCALE: NO SCALE
DESIGNED BY: TMG DATE: 4/11

BRIDGE NO. 07229 DRAWING NO. 52417

| DATE REVISED | DATE FILMED | DATE REVISED | DATE FILMED | FED. ROAD DIST. NO. | STATE | FED. AID PROJ. NO. | SHEET NO. | TOTAL SHEETS |
|---|---|---|---|---|---|---|---|---|
| | | | | 6 | ARK. | | | |
| | | | | JOB NO. | | 040518 | 167 | 270 |
| | | | | 1 | 07229 | TRANSITIONAL RAILING | | 52418 |

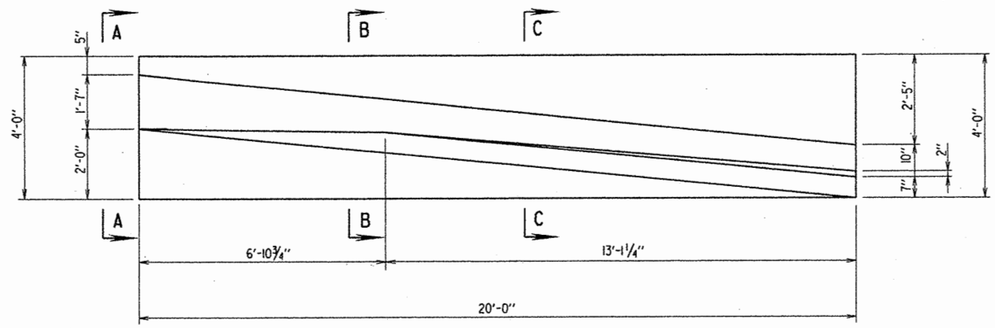


PLAN - TRANSITIONAL APPROACH RAILING

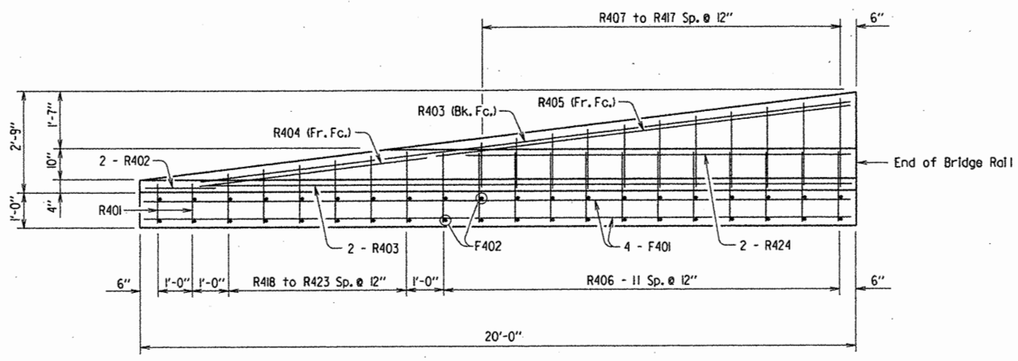


ELEVATION - TRANSITIONAL APPROACH RAILING

## FOR INFORMATION ONLY SCHEDULE OF QUANTITIES PER RAIL UNIT

| CLASS "S" CONCRETE | REINF. STEEL (GRADE 60) | BOILED LINSEED OIL |
|---|---|---|
| 4.39 Cu. Yds. | 388 Lbs. | 0.2 Gal. |

## BAR LIST PER RAILING

| MARK | NO. REQ'D. | LENGTH | 'A' | 'B' | P.D. |
|---|---|---|---|---|---|
| F401 | 8 | 19'-8" | | | Str. |
| F402 | 40 | 3'-8" | | | Str. |
| | | | | | |
| R401 | 2 | 5'-2" | 1'-4" | 1'-1" | 2" |
| R402 | 2 | 2'-0" | | | Str. |
| R403 | 3 | 17'-9" | | | Str. |
| R404 | 1 | 5'-0" | | | Str. |
| R405 | 1 | 12'-9" | | | Str. |
| R406 | 12 | 6'-7" | | | 2" |
| R407 to R417 | 1 Each | 3'-2" to 5'-7" | 1'-3" to 2'-5½" | 1'-3" to 2'-5½" | 2" |
| R418 to R423 | | 3'-11" to 5'-3" | 1'-4" to 1'-11¼" | 1'-1½" | 2" |
| R424 | 2 | 10'-9" | | | Str. |
| | | | | | |
| | | | | | |

BENDING DIAGRAMS

Dimensions are out to out of bars.

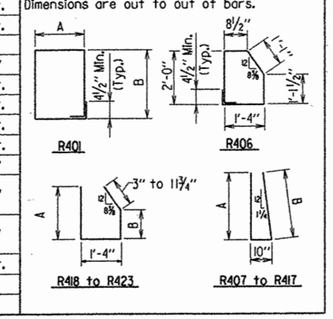


Notes :

Adjacent Railing is opposite hand to Railing shown.

All Concrete shall be Class "S" and be poured in the dry. All exposed corners to be chamfered ¾" unless otherwise noted.

All Reinforcing Steel shall conform to AASHTO M31 or M53, Grade 60.

Class I Protective Surface Treatment shall be applied to the roadway surface, front face and top of the Transitional Approach Railing.

Transitional Approach Railing shall be paid for at the contract unit price bid per each for "Transitional Approach Railing." See SP Job No. 040518 "Transitional Approach Railing."

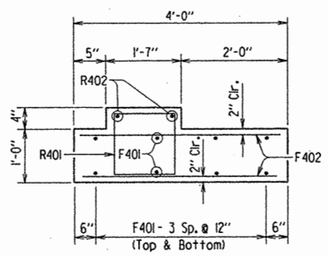


VIEW A-A

Scale : ¾" = 1'-0"

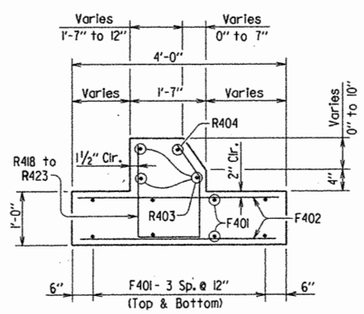


SECTION B-B

Scale : ¾" = 1'-0"

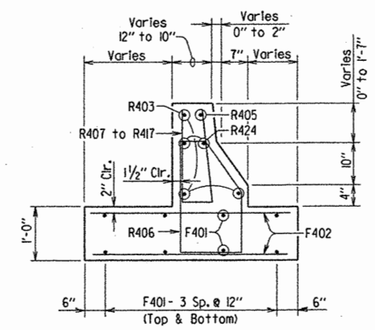


SECTION C-C

Scale : ¾" = 1'-0"

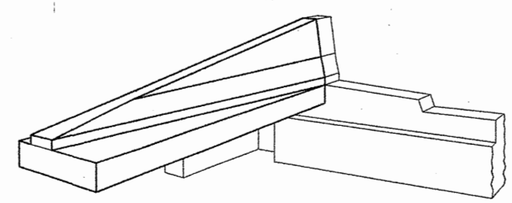

PICTORIAL OF TRANSITIONAL APPROACH RAILING

No Scale

STATE OF ARKANSAS
Carl S. Fussiller
REGISTERED PROFESSIONAL ENGINEER
No. 7510
9/1/11
CARL S. FUSSILLER

BRIDGE ENGINEER

DETAILS OF
TRANSITIONAL APPROACH RAILING
CLEAR CREEK
WASHINGTON COUNTY
ROUTE 265 SEC. 2

ARKANSAS STATE HIGHWAY COMMISSION
LITTLE ROCK, ARK.

DRAWN BY: TMG DATE: 8/9/2011 FILENAME: B040518XI_TR.DGN
CHECKED BY: JCT DATE: 8/24/11 SCALE: ½" = 1'-0" OR AS NOTED
DESIGNED BY: STD DATE:

BRIDGE NO. 07299 DRAWING NO. 52418