DATE REVISED	DATE FILMED	DATE REVISED	DATE FILMED	FED. ROAD DIST. NO.	STATE	FED. AID PROJ. NO.	SHEET NO.	TOTAL SHEETS
3-11-94	3-11-94			6	ARK.			
				JOB NO.		004985	16	84

(1) 6557, 6558, 6559 QUANTITIES 34128

SCHEDULE OF BRIDGE QUANTITIES FOR JOB NO. 004985

BRIDGE NO. / CODE NO. / NAME PLATE TITLE	UNIT OF STRUCTURE	ITEM NO.	205	205	205	603	801	802	SP & 802	803	SS & 804	812	816	816
		ITEM	REMOVAL OF EXISTING BRIDGE STRUCTURE (SITE NO. 1)	REMOVAL OF EXISTING BRIDGE STRUCTURE (SITE NO. 2)	REMOVAL OF EXISTING BRIDGE STRUCTURE (SITE NO. 3)	TEMPORARY BRIDGE STRUCTURE (20' ROADWAY WIDTH)	UNCLASSIFIED EXCAVATION FOR STRUCTURES-BRIDGE	CLASS S CONCRETE-BRIDGE	CLASS S(AE) CONCRETE-BRIDGE	BOILED LINSEED OIL	REINFORCING STEEL-BRIDGE (GRADE 60)	BRIDGE NAME PLATE (TYPE C)	FILTER BLANKET	DUMPED RIPRAP
		UNIT	LUMP SUM	LUMP SUM	LUMP SUM	LIN. FT.	CU. YD.	CU. YD.	CU. YD.	GAL.	LB.	EACH	SQ. YD.	CU. YD.
6557 / X020 / VACHE GRASSE CREEK	END BENT NOS. 1 & 4						182	47.23			6934	1	285	143
	INT. BENT NOS. 2 & 3						105	38.27			6711			
	THREE 35' R.C. SLAB SPANS								303.40	9.2	32095			
	TOTAL FOR BRIDGE NO. 6557		1.0				287	85.50	303.40	9.2	45740	1	285	143
6558 / X020 / VACHE GRASSE CREEK	END BENT NOS. 1 & 5						160	40.20			6012	1	177	88
	INT. BENT NOS. 2 THRU 4						100	52.10			9297			
	FOUR 30' R.C. SLAB SPANS								275.90	10.4	35591			
	TOTAL FOR BRIDGE NO. 6558			1.0		62	260	92.30	275.90	10.4	50900	1	177	88
6559 / X021 / FLAT ROCK CREEK	END BENT NOS. 1 & 5						245 ⚠	51.30			6948	1	304	152
	INT. BENT NOS. 2 THRU 4						152 ⚠	66.60			10333			
	FOUR 35' R.C. DECK GIRDER SPANS								277.70	12.3	56779			
	TOTAL FOR BRIDGE NO. 6559				1.0	75	397 ⚠	117.90	277.70	12.3	74060	1	304	152
	TOTALS FOR JOB NO. 004985		1.0	1.0	1.0	137	944 ⚠	295.70	857.00	31.9	170700	3	766	383

John Sage
DESIGN SECTION SUPERVISOR

⚠ *Revised excavation quantities 3-11-94.KMG*

STATE OF ARKANSAS
REGISTERED PROFESSIONAL ENGINEER
No. 2168
3-11-94
DALE F. LOG

BRIDGE ENGINEER

SCHEDULE OF BRIDGE QUANTITIES
GREENWOOD - HWY. 22 BRS. & APPRS.
SEBASTIAN COUNTY

ROUTE 96 SEC. 2

ARKANSAS STATE HIGHWAY COMMISSION
LITTLE ROCK, ARK.

DRAWN BY: RLW DATE: 3-31-93
CHECKED BY: JPC & JSB DATE: 3-11-94 SCALE: NONE
DESIGNED BY: DATE:
BRIDGE NO. 6557, 6558, 6559 DRAWING NO. 34128

b4985.ql

DATE REVISED	DATE FILMED	DATE REVISED	DATE FILMED	FED. ROAD DIST. NO.	STATE	FED. AID PROJ. NO.	SHEET NO.	TOTAL SHEETS
				6	ARK.			
				JOB NO.		004985	27	84
				(1) 6558		LAYOUT		34134

For R/W Data, see Rdwy. Plans

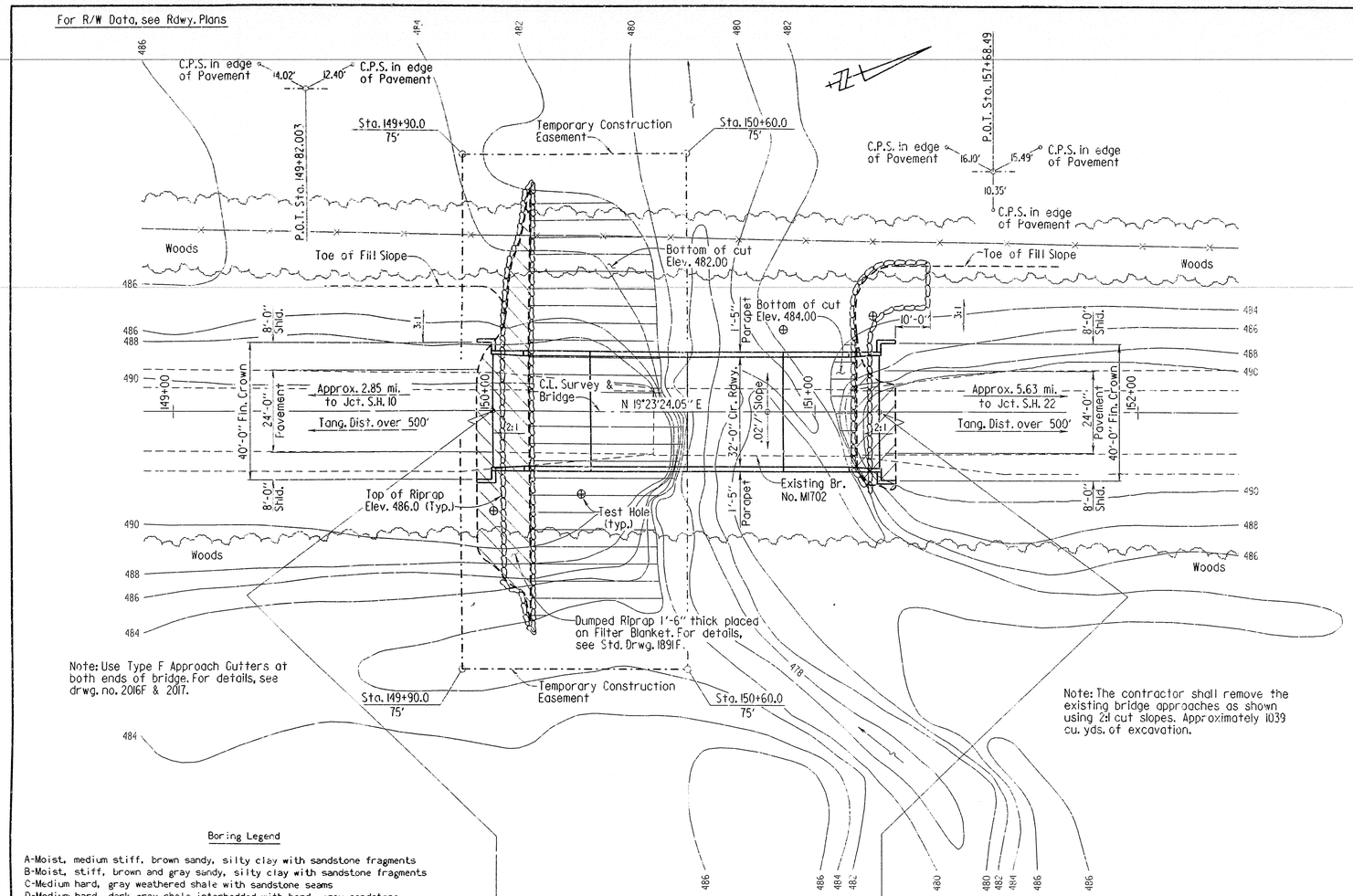

PLAN

GENERAL NOTES

BENCH MARK: Chiseled Square on S.W. Abutment 15' Right of C.L. Survey Sta. 150+51.00. Elev. 491.675.

CONSTRUCTION SPECIFICATIONS: Arkansas State Highway and Transportation Department Standard Specifications for Highway Construction, 1993 edition, with applicable supplemental specifications and special provisions.

DESIGN SPECIFICATIONS: AASHTO Standard Specifications for Highway Bridges, 1992 with current interim specifications.

LIVE LOADING: HS20 METHOD OF DESIGN: Load Factor
SEISMIC PERFORMANCE CATEGORY: A

MATERIALS AND STRENGTHS:

Superstructure Concrete (see span drws.)	f'c = 4,000 psi
Substructure Concrete (Class S)	f'c = 3,500 psi
Reinforcing Steel (A615 or A617, GR. 60)	fy = 60,000 psi

FOOTINGS: Footings shall be set a minimum of 1'-6" into material designated as medium hard shale on the boring legend. Foundations for footings shall be prepared in accordance with section 801.04 of the standard specifications. Rock excavations shall be made to neat lines of the concrete footings. Care shall be exercised to avoid shattering of rock faces by excessive blasting. Concrete in footings shall be poured directly against excavated surfaces of rock.

BRIDGE DECK: The concrete bridge deck shall be given a tine finish as specified for final finishing in subsection 802.20 for Class 5 Bridge Roadway Surface Finish.

BOILED LINSEED OIL: Boiled linseed oil treatment shall be applied to the roadway surface and to the face and top of the concrete parapet rail.

DETAIL DRAWINGS:	DRAWING NO.
End Bents	34135
Int. Bents	34136
30' R.C. Slab Spans	34137 & 34138
Type C Bridge Name Plate	2389A
Embankment Construction	1888A
Dumped Riprap and Filter Blanket	1891F
Computing Excavation for Structures	1891F
Type F Approach Gutters	2016F & 2017

EXISTING BRIDGE: Existing bridge No. M1702 (log mile 2.85) is 22' wide and 62' long and consists of a steel superstructure supported by a concrete substructure. The existing bridge is located approximately along C.L. Survey.

REMOVAL AND SALVAGE: Existing bridge (M1702) shall be removed in accordance with section 205 of the Standard Specifications. All material from the existing bridge shall become the property of the contractor.

TEMPORARY BRIDGE: Construct a 62' long temporary bridge approximately 45' downstream. The temporary bridge shall have a minimum roadway width of 20', a minimum live load capacity of H15 and a minimum deck elevation of 490.0. See section 603 of the Standard Specifications. See drawing numbers 2421 thru 2424 for standard temporary bridge details. If timber piling and pine timber are used on this temporary bridge structure, the materials shall be treated with a preservative according to the standard specifications. See roadway plans for actual detour grade and alignment.

Boring Legend

A-Moist, medium stiff, brown sandy, silty clay with sandstone fragments
B-Moist, stiff, brown and gray sandy, silty clay with sandstone fragments
C-Medium hard, gray weathered shale with sandstone seams
D-Medium hard, dark gray shale interbedded with hard, gray sandstone
E-Hard, gray sandstone interbedded with medium hard, dark gray shale
F-Moist, soft, brown sandy, silty clay with sandstone fragments and cobbles
G-Moist, medium stiff, brown and gray sandy, silty clay with sandstone fragments and cobbles
H-Medium hard, gray weathered shale with some sandstone seams
J-Hard, gray fractured sandstone interbedded with medium hard, dark gray shale
K-Wet, very loose, brown sand with clay seams

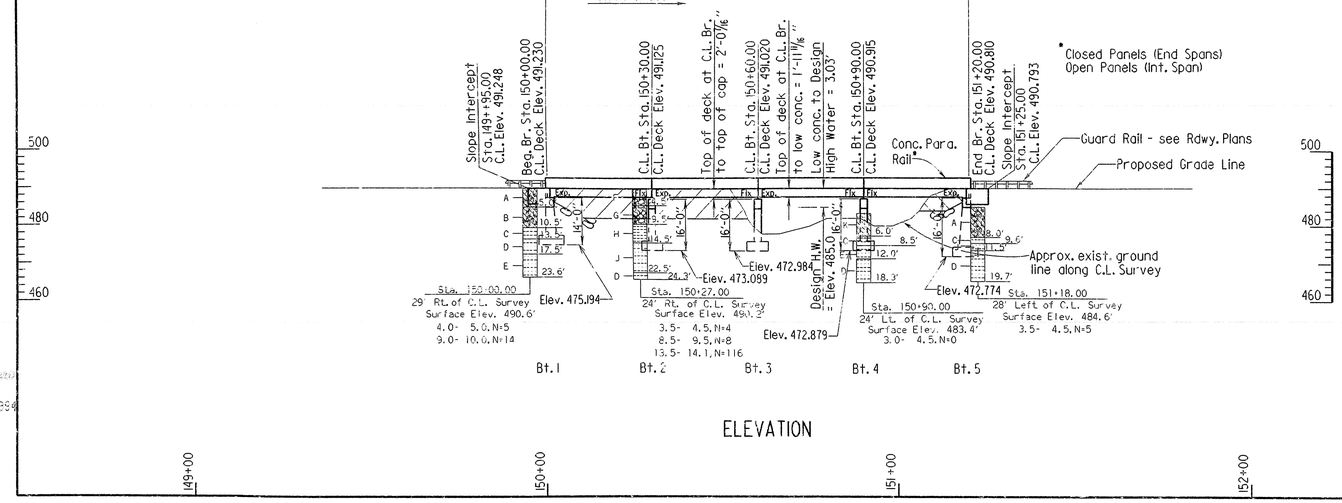

ELEVATION

HYDRAULIC DATA

Drainage Area = 3.7 sq. mi.

FLOOD	FREQUENCY	DISCHARGE	NATURAL WATER SURFACE ELEV.*	WATER SURFACE ELEV. WITH BACKWATER
DESCRIPTION	YEARS	CFS	FEET	FEET
DESIGN	50	3000	485.0	486.3
BASE	100	3670	485.5	486.9
EXTREME	500	5750	486.5	489.5
OVERTOPPING	>500	—	—	—

* Unconstricted water surface elev. at proposed bridge location.

Remarks

* Historical Highwater Elev. = 488.3
* Low Bridge Member Elev. = 488.03

STATE OF ARKANSAS REGISTERED PROFESSIONAL ENGINEER No. 1779 VERAL PINKERTON

BRIDGE ENGINEER

LAYOUT OF BRIDGE
(LOG MILE 2.85)
GREENWOOD - HWY. 22 BRS. & APPRS.
SEBASTIAN COUNTY
ROUTE 96 SEC. 2
ARKANSAS STATE HIGHWAY COMMISSION
LITTLE ROCK, ARK.

DRAWN BY: KMG DATE: 24 Aug 92
CHECKED BY: RJW DATE: 23 Jun 93
DESIGNED BY: DJM DATE: 6-93
SCALE: 1" = 20'

BRIDGE NO. 6558 DRAWING NO. 34134

34985X2.DI

DATE REVISED	DATE FILMED	DATE REVISED	DATE FILMED	FED. ROAD DIST. NO.	STATE	FED. AID PROJ. NO.	SHEET NO.	TOTAL SHEETS
				6	ARK.			
				JOB NO.		004985	28	84

(1) 6558 BENT DTLS. 34135

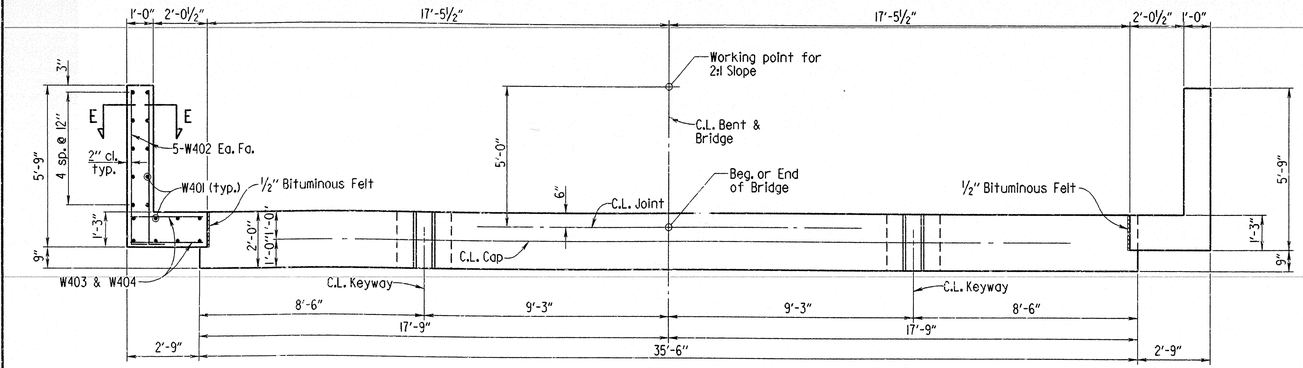

PLAN
Scale: ⅜" = 1'-0"

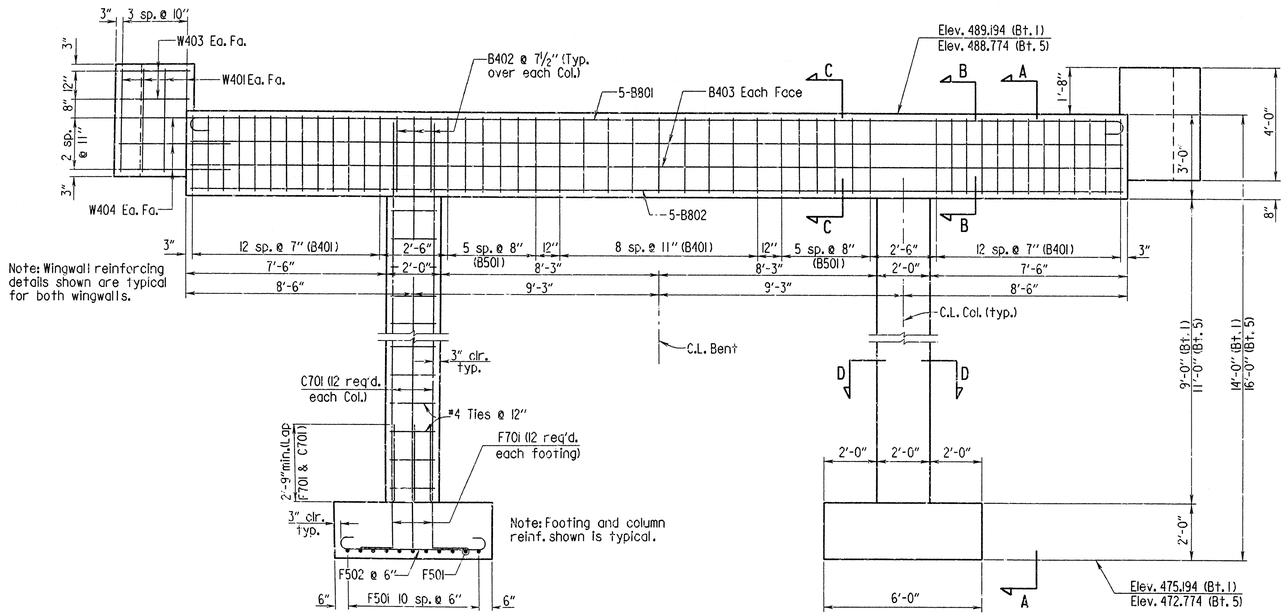

Note: Wingwall reinforcing details shown are typical for both wingwalls.

ELEVATION
Scale: ⅜" = 1'-0"
Note: View is looking back at Bent 1 and looking ahead at Bent 5.

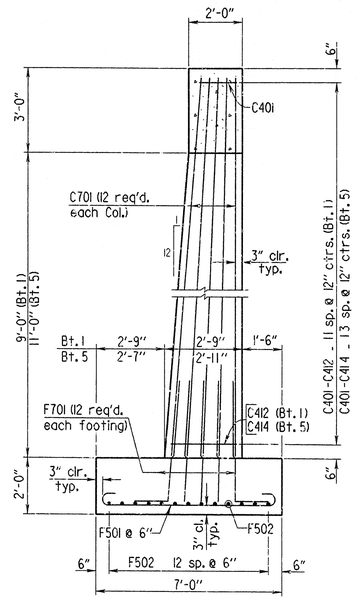

SECTION A-A
Scale: ⅜" = 1'-0"

BAR LIST (EACH BENT)

MARK	NO. REQ'D. Bt. 1	NO. REQ'D. Bt. 5	LENGTH	'A'	'B'	P.D.
B401	35	35	9'-0"	2'-8"	1'-8"	2"
B402	6	6	6'-10"	2'-8"	1'-8"	2"
B403	4	4	35'-2"			Str.
B501	12	12	9'-2"	2'-8"	1'-8"	2½"
B801	5	5	37'-0"	35'-2"	8"	6"
B802	5	5	35'-2"			Str.
W401	36	36	3'-8"			Str.
W402	20	20	6'-4"	5'-5"	1'-0"	3"
W403	8	8	2'-8"			Str.
W404	12	12	4'-3"			Str.
C401 - C412	2 of each	2 of each	Var. 6'-3" to 8'-1"	Var. 1'-4½" to 2'-3½"	1'-7"	2"
C413	0	2	8'-3"	2'-4½"	1'-7"	2"
C414	0	2	8'-5"	2'-5½"	1'-7"	2"
C701	24	0	11'-8"			Str.
C701	0	24	13'-8"			Str.
F501	22	22	7'-8"	6'-6"	5"	3¾"
F502	26	26	6'-8"	5'-6"	5"	3¾"
F701	24	24	5'-6"	4'-6"	1'-2"	5¼"

BENDING DIAGRAMS

Dimensions are out to out of bars.

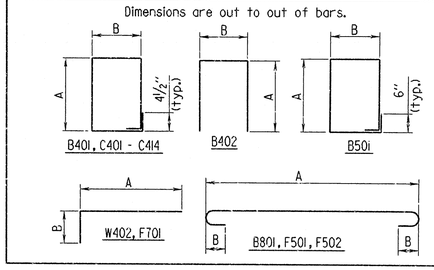

END BENT NOTES

All concrete shall be Class "S" with a minimum 28 day compressive strength f'c = 3,500 psi. Concrete shall be poured in the dry and all exposed corners to be chamfered 3/4" unless otherwise noted.

All reinforcing steel shall conform to ASTM A615 or A617, Grade 50 (yield strength = 60,000 psi.).

For additional information see layout.

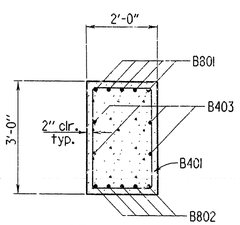

SECTION B-B
Scale: ½" = 1'-0"

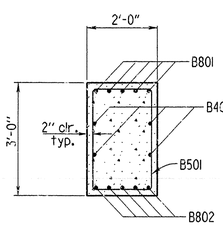

SECTION C-C
Scale: ½" = 1'-0"

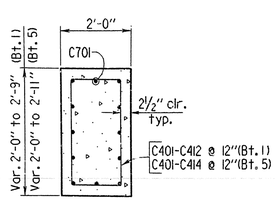

SECTION D-D
Scale: ½" = 1'-0"

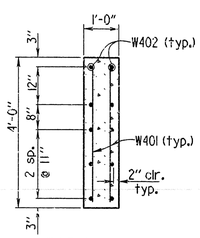

SECTION E-E
Scale: ½" = 1'-0"

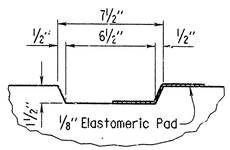

TYPICAL KEYWAY DETAIL
No Scale

Note:
⅛" Elastomeric Pad to be in full contact with Bent Cap surfaces when placing superstructure concrete.

DETAILS OF END BENT NOS. 1 AND 5

STATE OF ARKANSAS REGISTERED PROFESSIONAL ENGINEER No. 1779 VERAL PINKERTON

BRIDGE ENGINEER

ROUTE 96 SEC. 2

ARKANSAS STATE HIGHWAY COMMISSION

LITTLE ROCK, ARK.

DRAWN BY: KMC DATE: 19 Jan 93
CHECKED BY: RdW DATE: 12 Apr 93
DESIGNED BY: JAC DATE: 1 Dec 92
SCALE: As Shown

BRIDGE NO. 6558 DRAWING NO. 34135

B4985X2.B1

DATE REVISED	DATE FILMED	DATE REVISED	DATE FILMED	FED. ROAD DIST. NO.	STATE	FED. AID PROJ. NO.	SHEET NO.	TOTAL SHEETS
				6	ARK.			
				JOB NO.		004985	29	84

(1) 6558 BENT DTLS. 34136

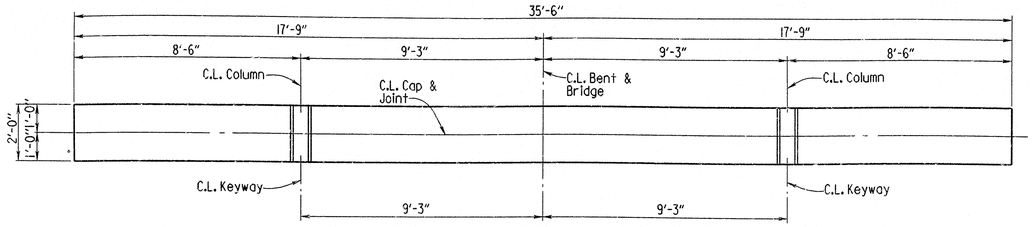

PLAN
Scale: 3/8" = 1'-0"

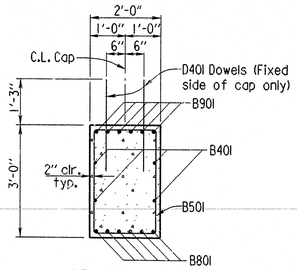

SECTION B-B
Scale: 1/2" = 1'-0"

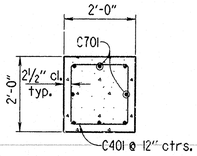

SECTION C-C
Scale: 1/2" = 1'-0"

BAR LIST (EACH BENT)

MARK	NO. REQ'D.	LENGTH	'A'	'B'	P.D.
B401	4	35'-2"			Str.
B402	6	6'-10"	2'-8"	1'-8"	2"
B501	51	9'-2"	2'-8"	1'-8"	2 1/2"
B801	6	35'-2"			Str.
B901	6	37'-8"	35'-2"	10"	9"
D401	*	2'-6"			Str.
C401	28	6'-8"	1'-7"	1'-7"	2"
C701	16	13'-8"			Str.
F501	22	7'-8"	6'-6"	5"	3 3/4"
F502	26	6'-8"	5'-6"	5"	3 3/4"
F701	16	5'-6"	4'-6"	1'-2"	5 1/4"

*22 Req'd. for Fix-Exp. Bent
44 Req'd. for Fix-Fix Bent

BENDING DIAGRAMS

Dimensions are out to out of bars.

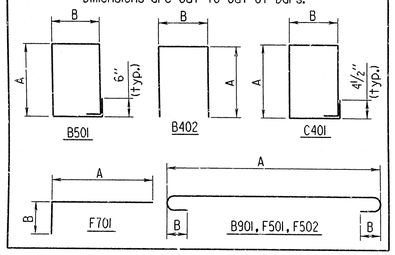

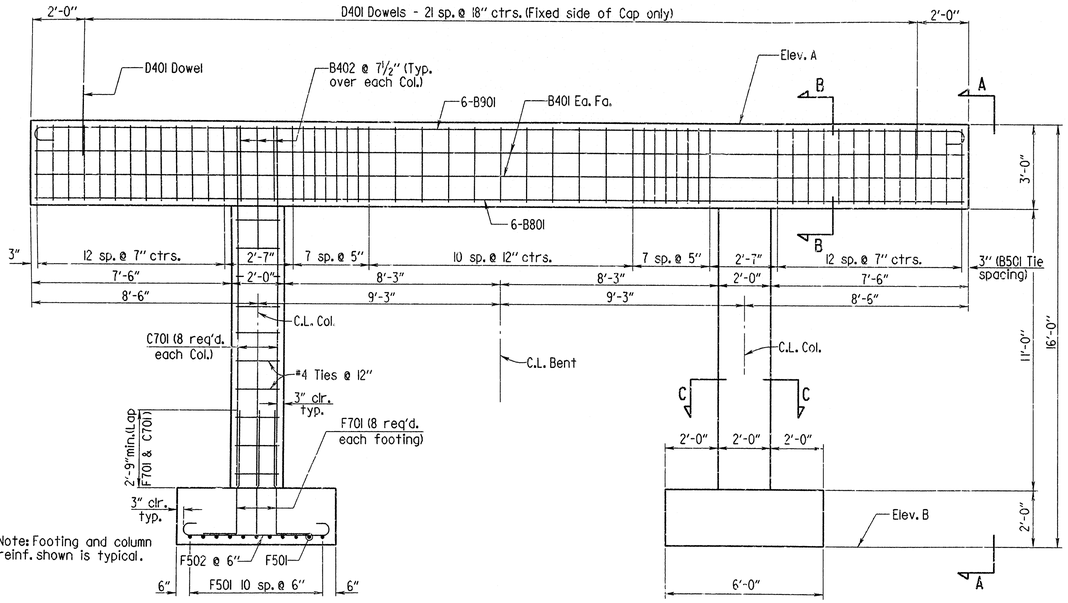

ELEVATION
Scale: 3/8" = 1'-0"

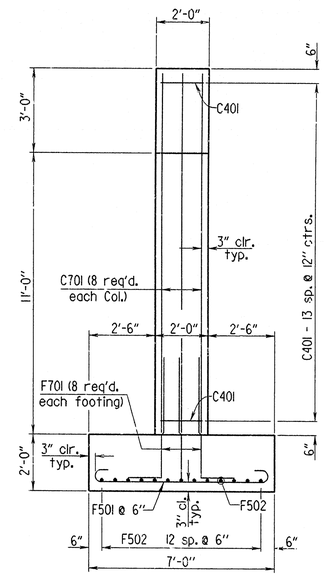

VIEW A-A
Scale: 3/8" = 1'-0"

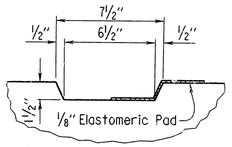

TYPICAL KEYWAY DETAIL
No Scale

Note:
1/8" Elastomeric Pad to be in full contact with Bent Cap surfaces when placing superstructure concrete.

All concrete shall be Class "S" with a minimum 28 day compressive strength f'c = 3,500 psi. Concrete shall be poured in the dry and all exposed corners to be chamfered 3/4" unless otherwise noted.

All reinforcing steel shall conform to ASTM A615 or A617, Grade 60 (yield strength = 60,000 psi.).

For additional information see layout.

TABLE OF VARIABLES

BENT NO.	ELEV. "A"	ELEV. "B"
2	489.089	473.089
3	488.984	472.984
4	488.879	472.879

DETAILS OF
INT. BENT NOS. 2 THRU 4

STATE OF ARKANSAS
REGISTERED PROFESSIONAL ENGINEER
No. 1779
VERAL PINKERTON

BRIDGE ENGINEER

ROUTE 96 SEC. 2
ARKANSAS STATE HIGHWAY COMMISSION
LITTLE ROCK, ARK.

DRAWN BY: KMG DATE: 19 Jan 93
CHECKED BY: RJW DATE: 12 Apr 93
DESIGNED BY: JAC DATE: 1 Dec 92
SCALE: As Shown

BRIDGE NO. 6558 DRAWING NO. 34136

JAN 0 7 1994

B4985X2.B2

DATE REVISED	DATE FILMED	DATE REVISED	DATE FILMED	FED. ROAD DIST. NO.	STATE	FED. AID PROJ. NO.	SHEET NO.	TOTAL SHEETS
				6	ARK.			
				JOB NO.		004985	30	84
				(1) 6558		SPAN DTLS.		34137

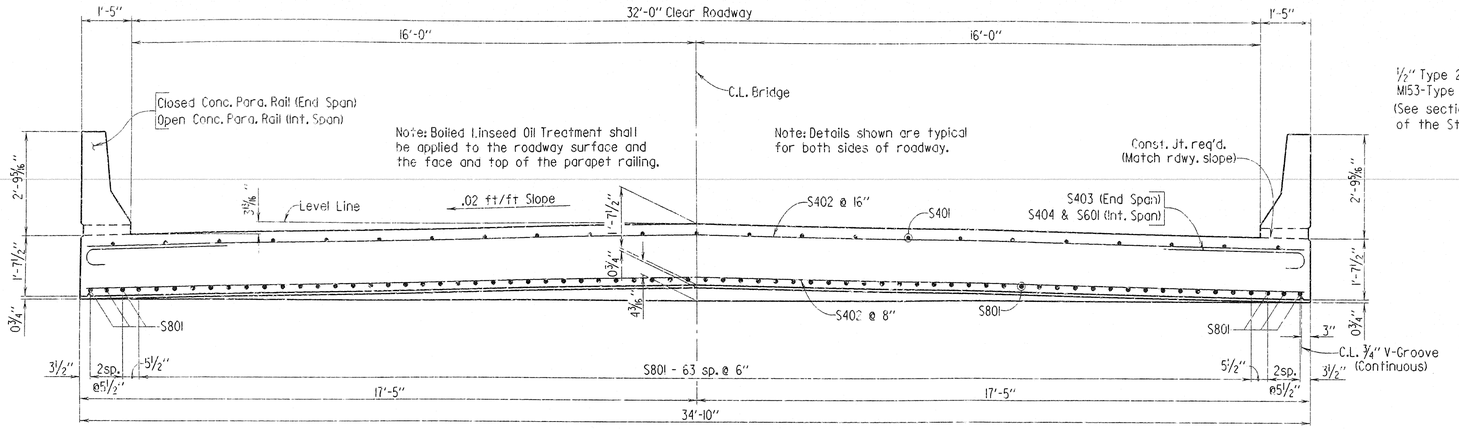

TYPICAL SECTION THRU ROADWAY

Scale: 1/2" = 1'-0"

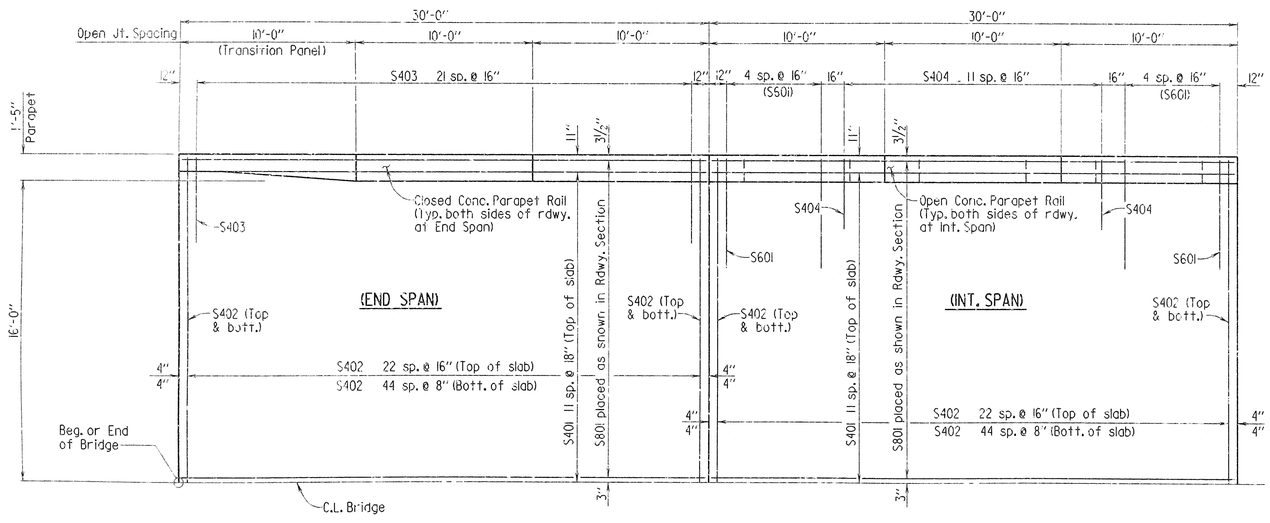

HALF REINFORCING PLAN

Scale : 1/4" = 1'-0"

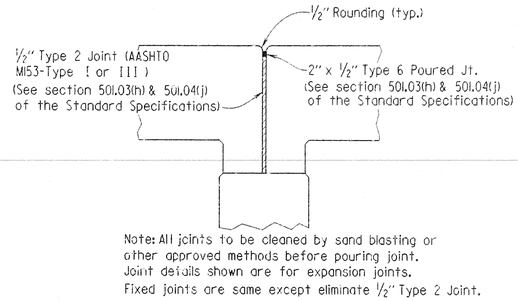

Note: All joints to be cleaned by sand blasting or other approved methods before pouring joint. Joint details shown are for expansion joints. Fixed joints are same except eliminate 1/2" Type 2 Joint.

TYPICAL SECTION THRU JOINT

No Scale

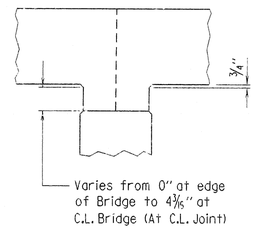

RISER DETAIL

No Scale

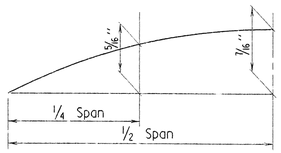

DEAD LOAD CAMBER DIAGRAM

No Scale

BAR LIST (PER SPAN)

MARK	NUMBER REQUIRED END	NUMBER REQUIRED INT.	LENGTH	P.D.
S401	23	23	29'-8"	Str.
S402	68	68	34'-6"	Str.
S403	44	0	3'-9"	Str.
S404	0	24	3'-4"	Str.
S601	0	20	6'-6"	4 1/2"
S801	70	70	29'-8"	Str.
R401	8	0	7'-9"	2" *
R402	16	0	4'-3"	2" *
R403	8	0	7'-9"	2" *
R404	36	24	9'-8"	Str.
R405	40	60	6'-4"	2" *
R406	40	60	7'-4"	2" *
R407	0	36	5'-10"	2" *
R408	0	36	3'-2"	2" *
R601	14	0	8'-4"	4 1/2" *
R602	6	0	4'-10"	Str.
R603	0	30	9'-8"	Str.

Bending Diagrams

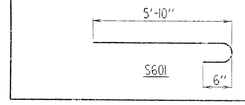

*For Bending Diagrams, see drwg. no. 34138.

General Notes

All concrete to be Class S(AE). Exposed corners to be chamfered 3/4" unless otherwise noted.

Bar supports for reinforcing steel will not be paid for directly, but will be considered subsidiary to the item "Reinforcing Steel".

Roofing Felt, Bituminous Felt, Preformed Joint, Structural Steel, and Type 6 Poured Synthetic Polymer Joints shall be measured and paid for as "Class S(AE) Concrete".

Design Live Load: HS 20-44

Load Distribution to Slab: Dead Load - 289 psf;** Live Load: 0.174 Wheels/Ft. of width plus 30% Impact.

**Includes 22 psf Future Wearing Surface.

For additional information, see Layout.

SLIP FORMING: An approved method of slip forming may be used. The contractor may submit his proposal and methods, prepared by a professional engineer, to the bridge engineer for approval. Approval must be obtained before slip forming work is begun. Payment will be based on plan quantities. Vertical joints and drainage slots may not be eliminated.

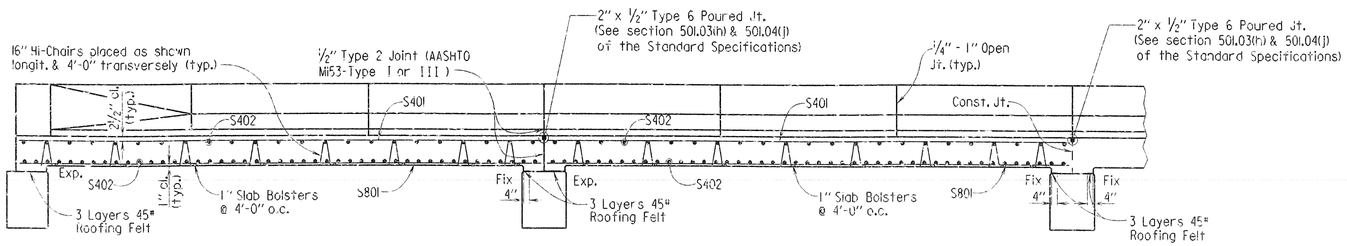

LONGITUDINAL SECTION ALONG C.L. BRIDGE

Scale : 1/4" = 1'-0"

STATE OF ARKANSAS REGISTERED PROFESSIONAL ENGINEER No. 1779 VERAL PINKERTON

BRIDGE ENGINEER

SHEET 1 OF 2
DETAILS OF
30'-0" R.C. SLAB SPANS

ROUTE 96 SEC. 2

ARKANSAS STATE HIGHWAY COMMISSION

LITTLE ROCK, ARK.

DRAWN BY: KMG DATE: 3 Nov 92
CHECKED BY: DATE: 4-93
DESIGNED BY: DATE: 6-92
SCALE: As Shown

BRIDGE NO. 6558 DRAWING NO. 34137

B4985X2.S11

DATE REVISED	DATE FILMED	DATE REVISED	DATE FILMED	FED. ROAD DIST. NO.	STATE	FED. AID PROJ. NO.	SHEET NO.	TOTAL SHEETS
				6	ARK.			
				JOB NO.		004985	31	84
				(1) 6558		RAIL DTLS.		34138

Note: For location of open and closed parapet panels, see Reinforcing Plan.

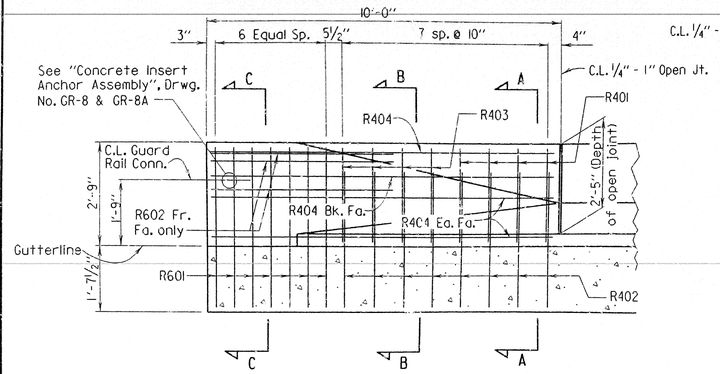

ELEVATION OF TRANSITION END PANEL

Scale: ½" = 1'-0"

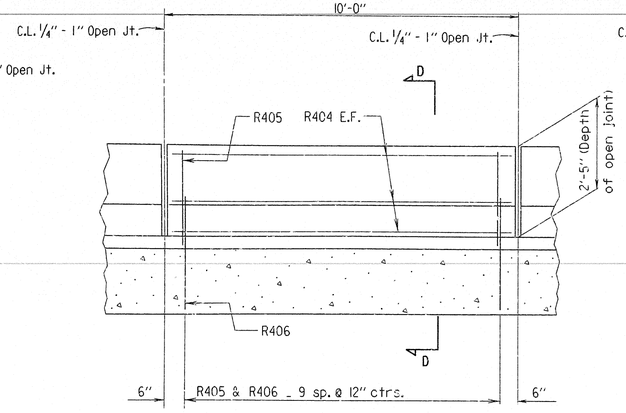

ELEVATION OF CLOSED INTERIOR PARAPET PANEL

Scale: ½" = 1'-0"

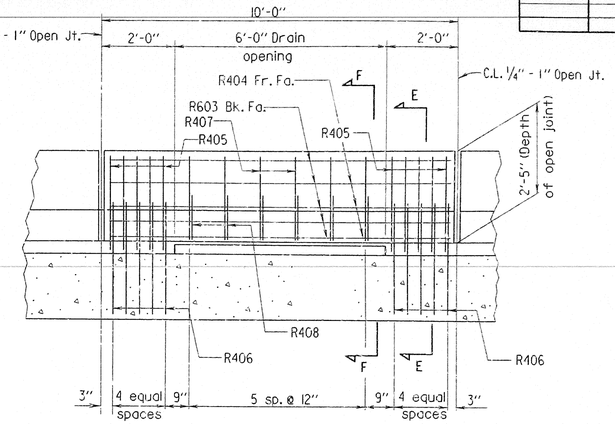

ELEVATION OF OPEN INTERIOR PARAPET PANEL

Scale: ½" = 1'-0"

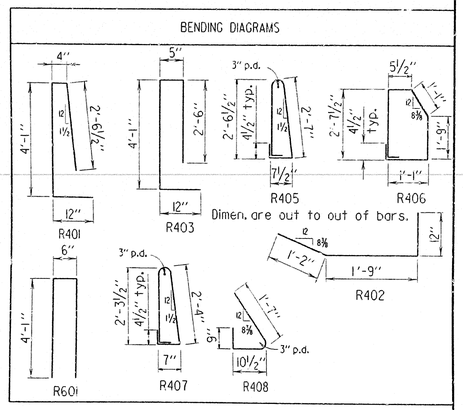

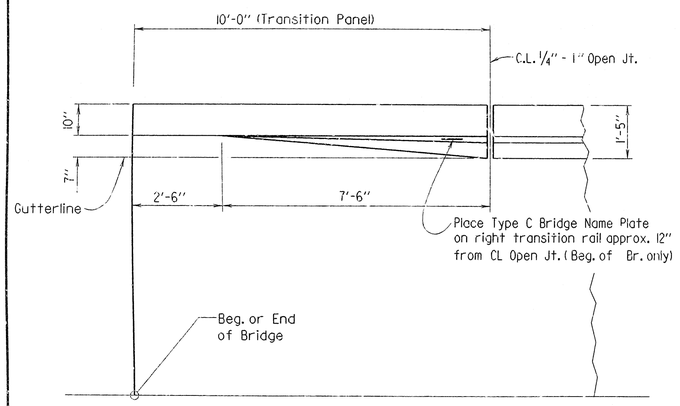

PLAN OF TRANSITION END PANEL

No Scale

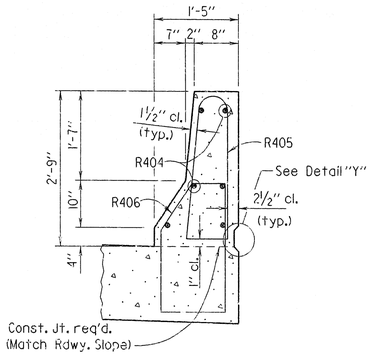

SECTION D-D

No Scale

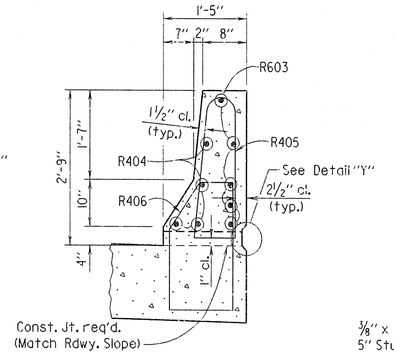

SECTION E-E

No Scale

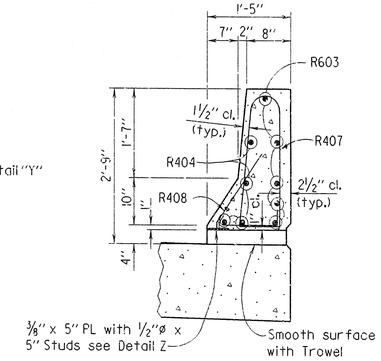

SECTION F-F

No Scale

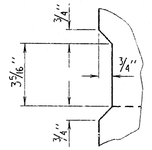

DETAIL Y

No Scale

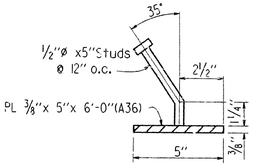

DETAIL Z

No Scale

Note:
Parapet studs shall be 5" long, granular flux filled, solid fluxed, or equal and automatically end welded to the plate. Studs and plate shall meet the requirements of Section 807. Studs and plates shall be measured and paid for as Class S(AE) Concrete.
The surfaces of the 3/8" plates which will not be in contact with concrete shall be painted in accordance with Section 638, or as approved by the Engineer. Only one prime coat is required where multiple coats are specified. All coats shall be applied in the fabricator's shop. Painting will not be paid for directly, but will be considered subsidiary to Class S(AE) Concrete.

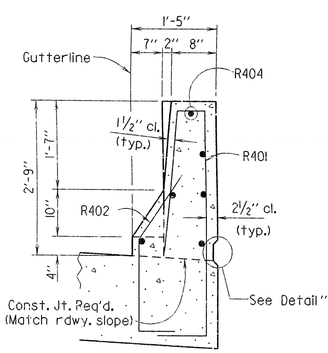

SECTION A-A

No Scale

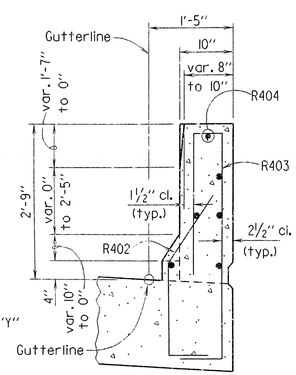

SECTION B-B

No Scale

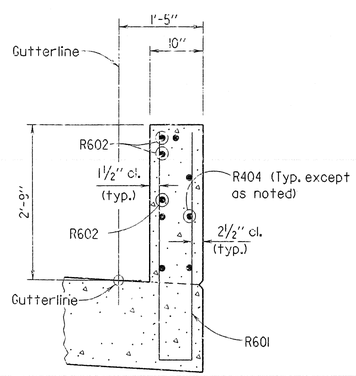

SECTION C-C

No Scale

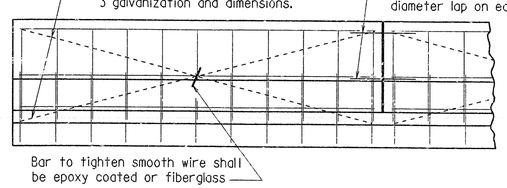

All panels shall be braced as shown to prevent racking. All open joints shall be sawed as soon as practical to a minimum width of ¼". To control cracking before sawing all joints must be grooved before the concrete is set. Sawing of the joints must be controlled so it will follow the grooved joint.

DETAILS OF OPTIONAL SLIPFORMING OF CONCRETE PARAPET RAIL (OPEN OR CLOSED)

½" = 1'-0"

The extruded parapet shall conform to the horizontal and vertical lines shown on the plans or as directed by the Engineer and shall present a smooth, uniform appearance and texture. Exposed surfaces may be given a light brush finish or a Class 3, Sprayed Finish, in place of Class 2, Rubbed Finish.

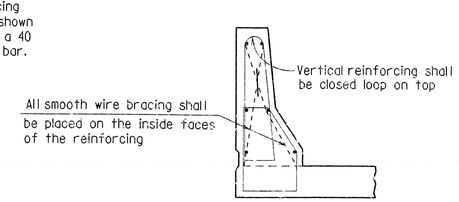

STATE OF ARKANSAS REGISTERED PROFESSIONAL ENGINEER No. 1779 VERAL JUNKERTON

BRIDGE ENGINEER

SHEET 2 OF 2
DETAILS OF
30'-0" R.C. SLAB SPANS

ROUTE 96 SEC. 2

ARKANSAS STATE HIGHWAY COMMISSION

LITTLE ROCK, ARK.

DRAWN BY: KMG DATE: 3 Nov 92
CHECKED BY: [illegible] DATE: 4-93
DESIGNED BY: [illegible] DATE: 6-93
SCALE: As Shown

BRIDGE NO. 6558 DRAWING NO. 34138

B4985X2.S12

DATE REVISED	DATE FILMED	DATE REVISED	DATE FILMED	FED. ROAD DIST. NO.	STATE	FED. AID PROJ. NO.	SHEET NO.	TOTAL SHEETS
[illegible]	11-1-16-89			6	ARK.			
[illegible]	11-2-10			JOB NO.				

1 — NAME PLATES — 2389A

7" Minimum to 9" Maximum
(Length to be determined by the lettering required)

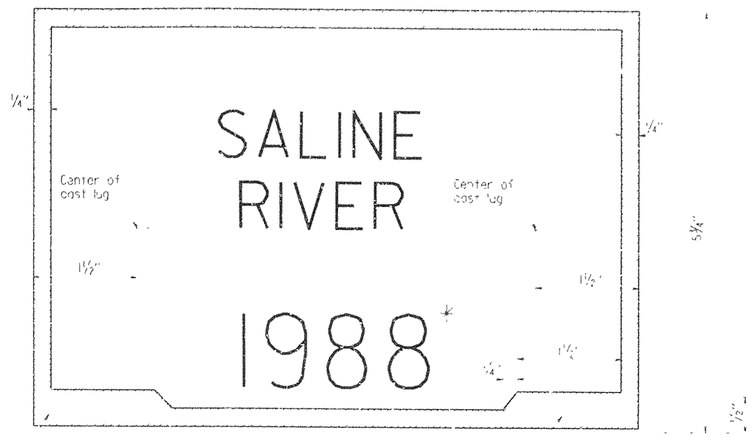

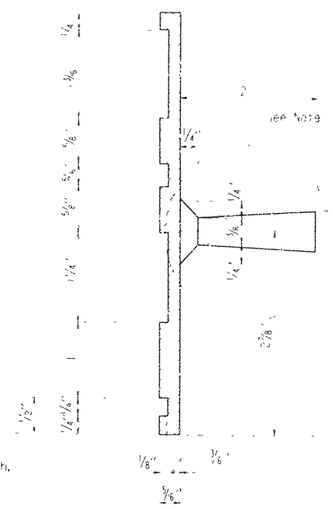

1 Stamp the design loading here with letters and numerals 3/8" high. Example: HS 20

Stamp the bridge number here with numerals 3/8" high. Example: 6275

TYPICAL BRIDGE NAME PLATE-STYLE 1-FULL SIZE
STREAM CROSSINGS

Note: Alternate attachments may be used provided such attachments are submitted and approval secured before fabrication is begun.

7" Minimum to 9" Maximum
(Length to be determined by the lettering required)

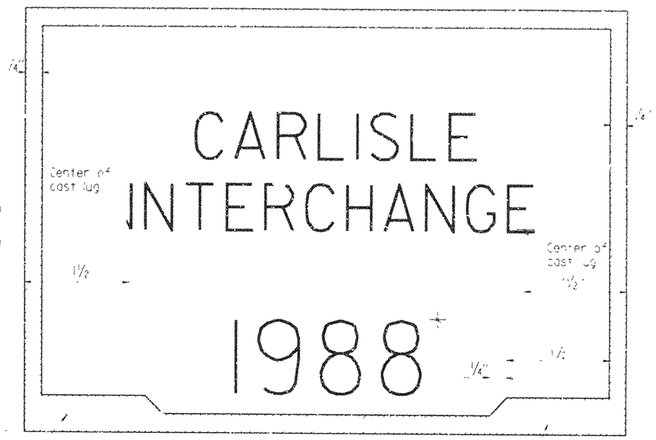

1 Stamp the design loading here with letters and numerals 3/8" high. Example: HS 20

Stamp the bridge number here with numerals 3/8" high. Example: 6275

TYPICAL BRIDGE NAME PLATE-STYLE 3-FULL SIZE
GRADE SEPARATION STRUCTURES

GENERAL NOTES

1 Name plates shall be either cast aluminum or bronze and shall meet the material requirements as specified in section 916 of the standard specifications.

Body of plate shall be 3/8" thick and shall include two tapering corners (1/8" to 3/16") as shown. The border and all lettering shall be raised 1/8" above the face of plate and shall be polished.

All lettering shall be plain gothic, square cut and not tapered.

The number of plates required and the location and name on the plate for each bridge shall be as designated on the plans.

2 3 Specifications: Arkansas State Highway and Transportation Department Standard Specifications for Highway Construction, Current Edition, with applicable Supplemental Specifications and Special Provisions.

7" Minimum to 9" Maximum
(Length to be determined by the lettering required)

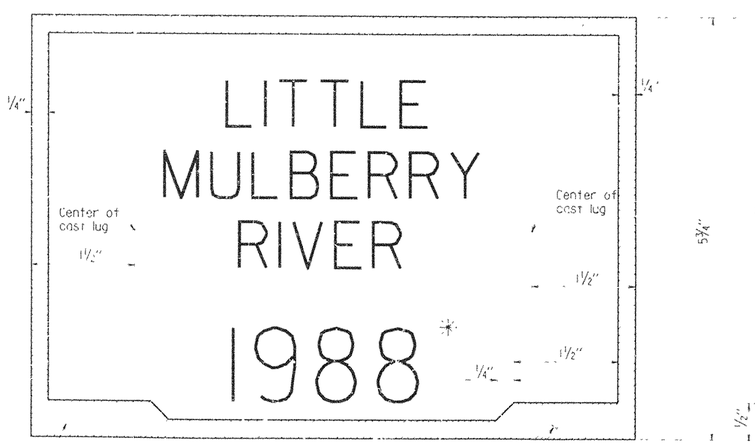

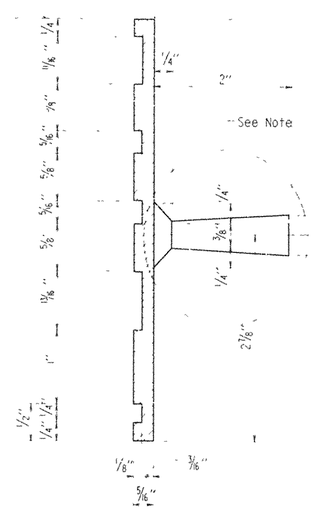

1 Stamp the design loading here with letters and numerals 3/8" high. Example: HS 20

Stamp the bridge number here with numerals 3/8" high. Example: 6275

TYPICAL BRIDGE NAME PLATE-STYLE 2-FULL SIZE
STREAM CROSSINGS

1 Stamp the design loading here with letters and numerals 3/8" high. Example: HS 20

Stamp the bridge number here with numerals 3/8" high. Example: 6275

TYPICAL BRIDGE NAME PLATE-STYLE 4-FULL SIZE
GRADE SEPARATION STRUCTURES

✳ Year in which contract is awarded.

1 Revised notes. 1-16-89, LM

2 Rev. General Notes. 11-2-90. W.Maj.

3 Rev. General Notes 11-11-92 CRHart

DETAILS OF STANDARD
TYPE C BRIDGE NAME PLATES

ROUTE SEC.

ARKANSAS STATE HIGHWAY COMMISSION

LITTLE ROCK, ARK.

DRAWN BY: LDF DATE: 6-16-88
CHECKED BY: CPB DATE: 6-16-88 SCALE: FULL SIZE
DESIGNED BY: DATE:
BRIDGE NO. DRAWING NO. 2389A

STATE OF ARKANSAS REGISTERED PROFESSIONAL BRIDGE ENGINEER No. [illegible]

21

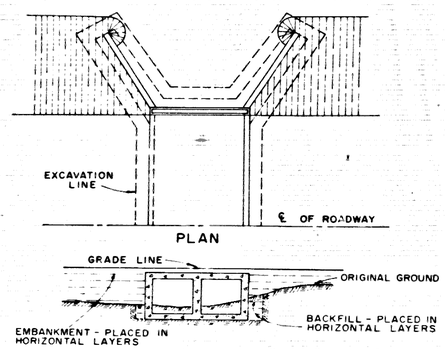

LONGITUDINAL SECTION

BOX CULVERT

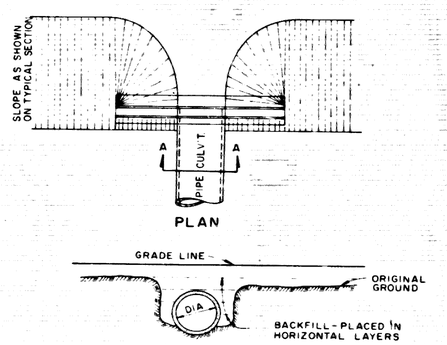

SECTION A-A

PIPE CULVERT

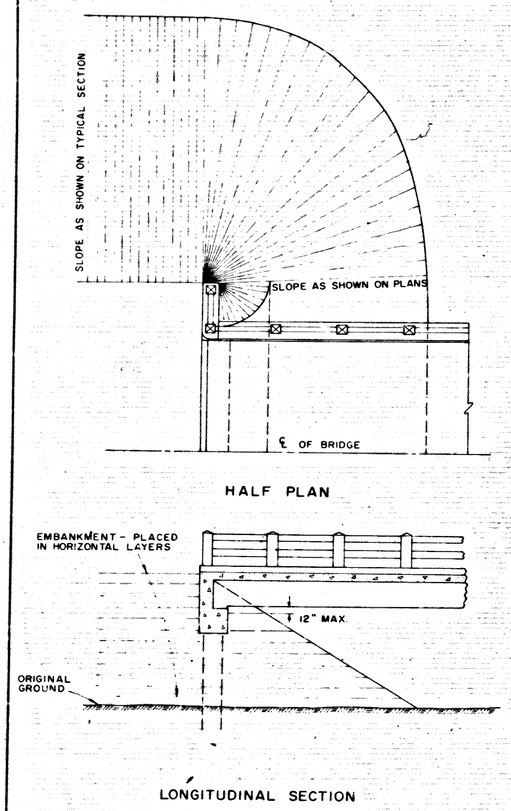

LONGITUDINAL SECTION

OPEN END ABUTMENT

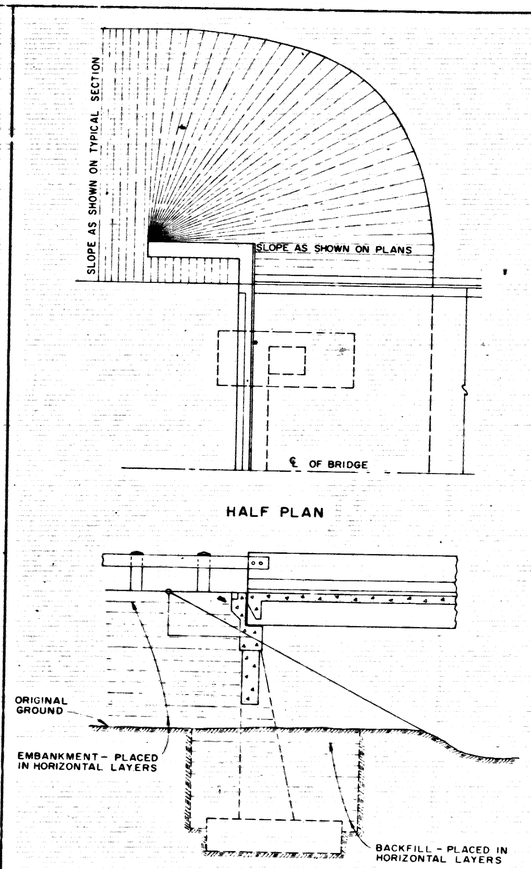

LONGITUDINAL SECTION

SEMI-STUB ABUTMENT AND TURN BACK WING PILE BENT

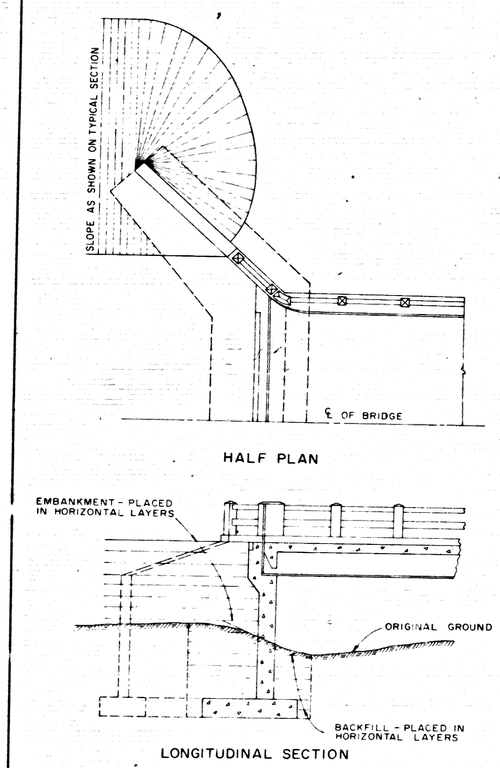

LONGITUDINAL SECTION

WINGWALL ABUTMENT

GENERAL NOTE

BACKFILL AND EMBANKMENT ADJACENT TO STRUCTURES TO BE CONSTRUCTED IN 4 INCH HORIZONTAL LAYERS (LOOSE MEASURE) AND COMPACTED TO THE SATISFACTION OF THE ENGINEER BY USE OF MECHANICAL EQUIPMENT.

CONSTRUCTION OF THE BRIDGE END EMBANKMENT

THE BRIDGE END EMBANKMENT SHALL BE DEFINED AS NOT LESS THAN 20 FEET OF EMBANKMENT ADJACENT TO THE END OF THE BRIDGE TOGETHER WITH THE SIDE SLOPES AND SLOPES UNDER THE BRIDGE END AND AROUND THE END OF WINGWALLS.

REFER TO SUB-SECTIONS 202.08 AND 202.09 OF THE SPECIFICATIONS FOR CONSTRUCTION REQUIREMENTS.

BACKFILLING EXCAVATION

IN SO FAR AS PRACTICABLE, ABUTMENT EXCAVATIONS SHALL BE CUT TO THE SIZE SHOWN ON THE PLANS WITH ALLOWANCE OF 3 FEET ON ALL SIDES.

OVERSIZED AND FLARED CUTS TO AVOID THE USE OF SHEETING SHALL NOT BE PERMITTED.

BACKFILL AROUND THE WALL OR COLUMNS SHALL BE COMPACTED IN ACCORDANCE WITH SUB-SECTION 801.08 OF THE SPECIFICATIONS.

DATE	REVISION	DATE FILMED
10-2-72	REVISED & REDRAWN	520 10-2-72

ARKANSAS STATE HIGHWAY COMMISSION

EMBANKMENT CONSTRUCTION AT BRIDGE ENDS AND BACKFILL FOR STRUCTURES

STANDARD DRAWING 1888A

DATE REVISED	DATE FILMED	DATE REVISED	DATE FILMED	FED. ROAD DIST. NO.	STATE	FED. AID PROJ. NO.	SHEET NO.	TOTAL SHEETS
11-6-87	552-11-6-87			6	ARK.		46	
7-15-88	547-7-15-88			JOB NO.				
11-11-92	11-11-92							

1 RIP. & EXCAV. 1891F

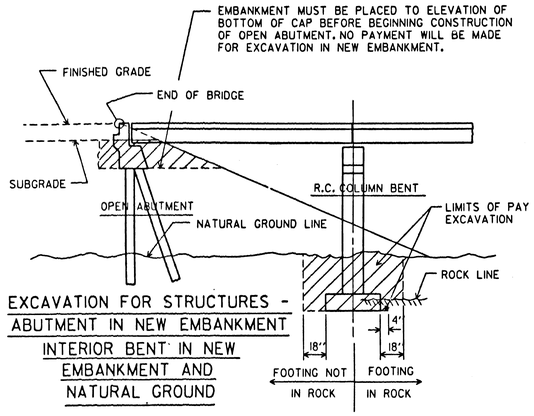

EXCAVATION FOR STRUCTURES - ABUTMENT IN NEW EMBANKMENT INTERIOR BENT IN NEW EMBANKMENT AND NATURAL GROUND

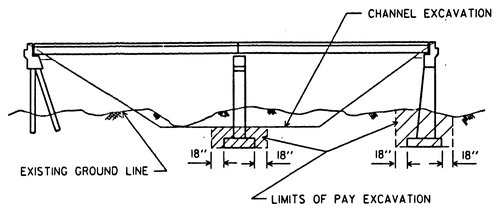

EXCAVATION FOR STRUCTURES - BRIDGE LOCATION WITH DESIGNATED CHANNEL CHANGE

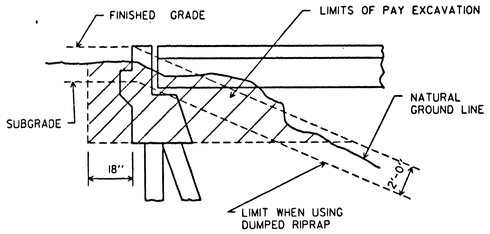

EXCAVATION FOR STRUCTURES - ABUTMENT IN NATURAL GROUND

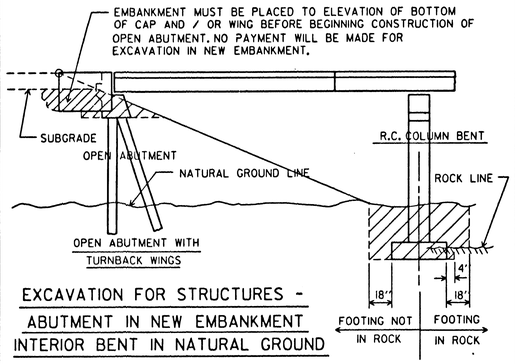

EXCAVATION FOR STRUCTURES - ABUTMENT IN NEW EMBANKMENT INTERIOR BENT IN NATURAL GROUND

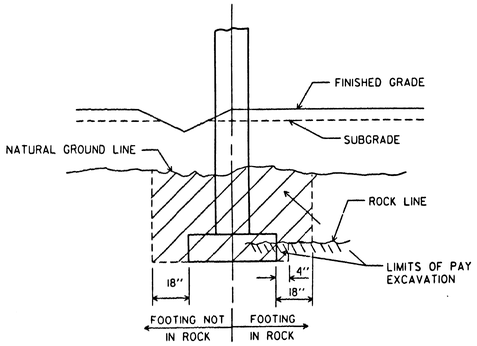

EXCAVATION FOR STURCTURES - BENT IN ROADWDAY FILL SECTION AND NATURAL GROUND

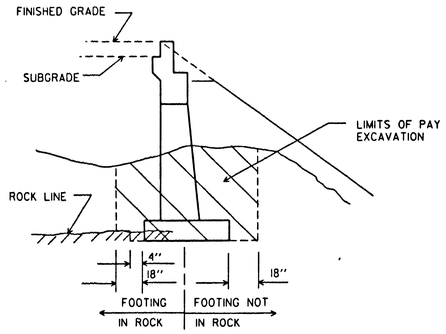

EXCAVATION FOR STRUCTURES - ABUTMENT IN NATURAL GROUND AND NEW EMBANKMENT

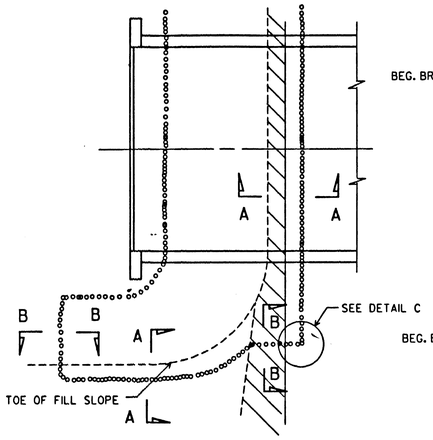

PLAN OF DUMPED RIPRAP

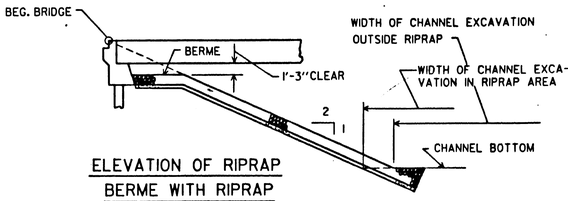

ELEVATION OF RIPRAP BERME WITH RIPRAP

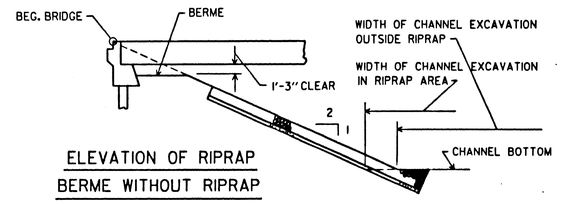

ELEVATION OF RIPRAP BERME WITHOUT RIPRAP

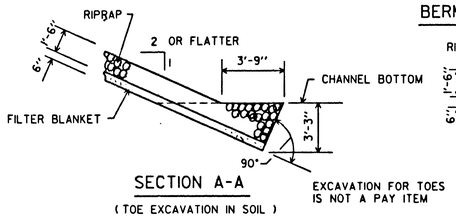

SECTION A-A

(TOE EXCAVATION IN SOIL)

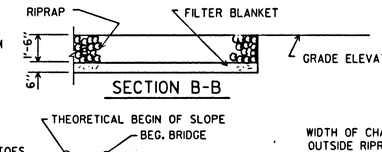

SECTION B-B

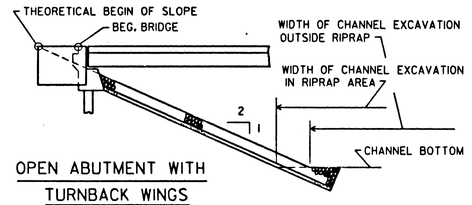

OPEN ABUTMENT WITH TURNBACK WINGS

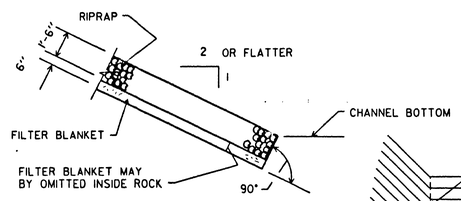

SECTION A-A

(TOE EXCAVATION IN ROCK)

NOTE : USE THIS TYPE OF TOE WHEN ROCK IS ENCOUNTERED WHICH IS IN A STABLE CONDITION.

1 2 NOTE : IN LIEU OF AN AGGREGATE FILTER BLANKET, A SYNTHETIC FIBER GEOTEXTILE FABRIC MEETING THE REQUIREMENTS OF AASHTO M288 FOR EROSION CONTROLL CLASS A MAY BE USED (SEE SECTION 816).

NOTE : DETAILS FOR COMPUTING EXCAVATION FOR STRUCTURES ARE INCLUDED FOR INFORMATION AS TO HOW PLAN QUANTITIES WERE CALCULATED AND FOR USE WHEN ADJUSTING QUANTITIES WHEN CHANGING FOOTING ELEVATION.

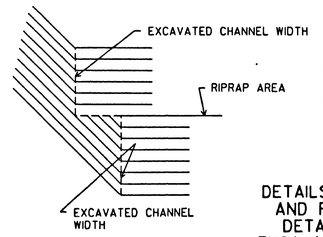

DETAIL C

1 REVISED NOTE: BY J.P.S. 7-15-88 CK. BY G.V.A.

2 REVISED NOTE: BY J.P.S. 11-11-92 CK. BY F.M.H.

STATE OF ARKANSAS REGISTERED PROFESSIONAL ENGINEER BRUCE DUNLAP No. 1779 LICENSED PROFESSIONAL ENGINEER

DETAILS FOR DUMPED RIPRAP AND FILTER BLANKET AND DETAILS FOR COMPUTING EXCAVATION FOR STRUCTURES

ROUTE SEC.

ARKANSAS STATE HIGHWAY COMMISSION

LITTLE ROCK, ARK.

DRAWN BY: J.P.S. DATE: 10-6-87
CHECKED BY: DATE:
DESIGNED BY: DATE:
SCALE: NO SCALE

BRIDGE NO. DRAWING NO. 1891F

JPSE522 : B1891F.STD : 1,550,3000,R40035 4

OCT 2 4 1995

D C B A 0 A B C D
TAMERAN