DATE REVISED	DATE FILMED	DATE REVISED	DATE FILMED	FED. ROAD DIST. NO.	STATE	FED. AID PROJ. NO.	SHEET NO.	TOTAL SHEETS
				6	ARK.			
				JOB NO.		004938	37	247

(1) 07057, 07058, 07059 & 07060 QUANT. 47911

SCHEDULE OF BRIDGE QUANTITIES - JOB NO. 004938

BRIDGE NO.	CODE NO.	BRIDGE NAME PLATE TITLE	ITEM NO.	205	603	801	802	802	803	804	804	805	807	SP & 808	812	816	816	SP JOB 004938
			UNIT OF STRUCTURE / ITEM	REMOVAL OF EXISTING BRIDGE STRUCTURE (SITE NO._)	TEMPORARY BRIDGE STRUCTURE (24' ROADWAY WIDTH)	UNCLASSIFIED EXCAVATION FOR STRUCTURES -BRIDGE	CLASS S CONCRETE -BRIDGE	CLASS S(AE) CONCRETE -BRIDGE	CLASS 1 PROTECTIVE SURFACE TREATMENT	REINFORCING STEEL -BRIDGE (GRADE 60)	EPOXY COATED REINFORCING STEEL (GRADE 60)	STEEL PILING (HP 12 x 53)	STRUCTURAL STEEL IN BEAM SPANS (M270, GR. 50W)	ELASTOMERIC BEARINGS	BRIDGE NAME PLATE (TYPE D)	FILTER BLANKET	DUMPED RIPRAP	SILICONE JOINT SEALANT
			UNIT	LUMP SUM	LIN. FT.	CU. YD.	CU. YD.	CU. YD.	GAL.	LB.	LB.	LIN. FT.	LB.	CU. IN.	EA.	SQ. YD.	CU. YD.	LIN. FT.
07057	X071	SINCLAIR CREEK	BENT NO. 1			44	41.40		.3	4251		140	1088			364	182	
			BENT NO. 2			130	46.51			8118								
			BENT NO. 3			104	46.32			8096								
			BENT NO. 4			98	46.39			8050								
			BENT NO. 5			45	41.58		.3	4255		140	1088			632	316	
			200'-0" CONT. COMP. W-BEAM UNIT					263.70	20.9		60120		150554	15606.0	1			119
			EXISTING BRIDGE NO. A1430 (SITE NO. 1)	1														
			TOTAL FOR BRIDGE NO. 07057		217	421	222.2	263.7	21.5	32770	60120	280	152730	15606	1	996	498	119
07058	X071	HUTCHINS CREEK	BENT NO. 1			26	30.88		.3	3400		100	772			146	73	
			BENT NO. 2			99	39.72			6620								
			BENT NO. 3			136	39.72			6620								
			BENT NO. 4			27	30.88		.3	3400		100	772			126	63	
			165'-0" CONT. COMP. W-BEAM UNIT					216.30	17.2		45040		134456	12195.0	1			86
			EXISTING BRIDGE NO. A1429 (SITE NO. 2)	1														
			TOTAL FOR BRIDGE NO. 07058		125	288	141.2	216.3	17.8	20040	45040	200	136000	12195	1	272	136	86
07059	X071	LONDON CREEK	BENT NO. 1			35	32.41		.3	3532		100	850			44	22	
			BENT NO. 2			93	39.00			5696								
			BENT NO. 3			81	38.34			5600								
			BENT NO. 4			35	32.25		.3	3532		100	850			242	121	
			120'-0" CONT. COMP. W-BEAM UNIT					156.70	12.5		36060		71410	10875.0	1			94
			EXISTING BRIDGE NO. A1428 (SITE NO. 3)	1														
			TOTAL FOR BRIDGE NO. 07059		155	244	142.0	156.7	13.1	18360	36060	200	73110	10875	1	286	143	94
07060	X071	MILL CREEK	BENT NO. 1				31.36		.3	3530		150	853			196	98	
			BENT NO. 2			199	48.09			7720								
			BENT NO. 3			165	48.09			7720								
			BENT NO. 4				31.36		.3	3530		150	853			138	69	
			130'-0" CONT. COMP. W-BEAM UNIT					169.50	13.6		38860		82984	11520.0	1			94
			EXISTING BRIDGE NO. 03881 (SITE NO. 4)	1														
			TOTAL FOR BRIDGE NO. 07060			364	158.9	169.5	14.2	22500	38860	300	84690	11520	1	334	167	94
			TOTAL FOR JOB 004938		497	1317 *	664.3	806.2	66.6	93670	180080	980	446530	50196	4	1888	944	393

* Includes approx. 253 cubic yards of rock excavation.

RICK ELLIS
DESIGN SECTION SUPERVISOR

STATE OF ARKANSAS
REGISTERED PROFESSIONAL ENGINEER
No. 4337
7/16/08
CHARLES P. BRAND

BRIDGE ENGINEER

SCHEDULE OF BRIDGE QUANTITIES
WEST FORK - SOUTH
(BRS. & APPRS.) (S)
WASHINGTON COUNTY
ROUTE 71 SEC. 16
ARKANSAS STATE HIGHWAY COMMISSION
LITTLE ROCK, ARK.

DRAWN BY: MAH DATE: 8-31-05 FILENAME: B004938_ql.dgn
CHECKED BY: KWY DATE: 7-16-08 SCALE: no scale
DESIGNED BY: DATE:

BRIDGE NO. 07057, 07058, 07059 & 07060 DRAWING NO. 47911

DATE REVISED	DATE FILMED	DATE REVISED	DATE FILMED	FED. ROAD DIST. NO.	STATE	FED. AID PROJ. NO.	SHEET NO.	TOTAL SHEETS
				6	ARK.			
				JOB NO.		004938	82	247
				(1) 07057		LAYOUT		47912

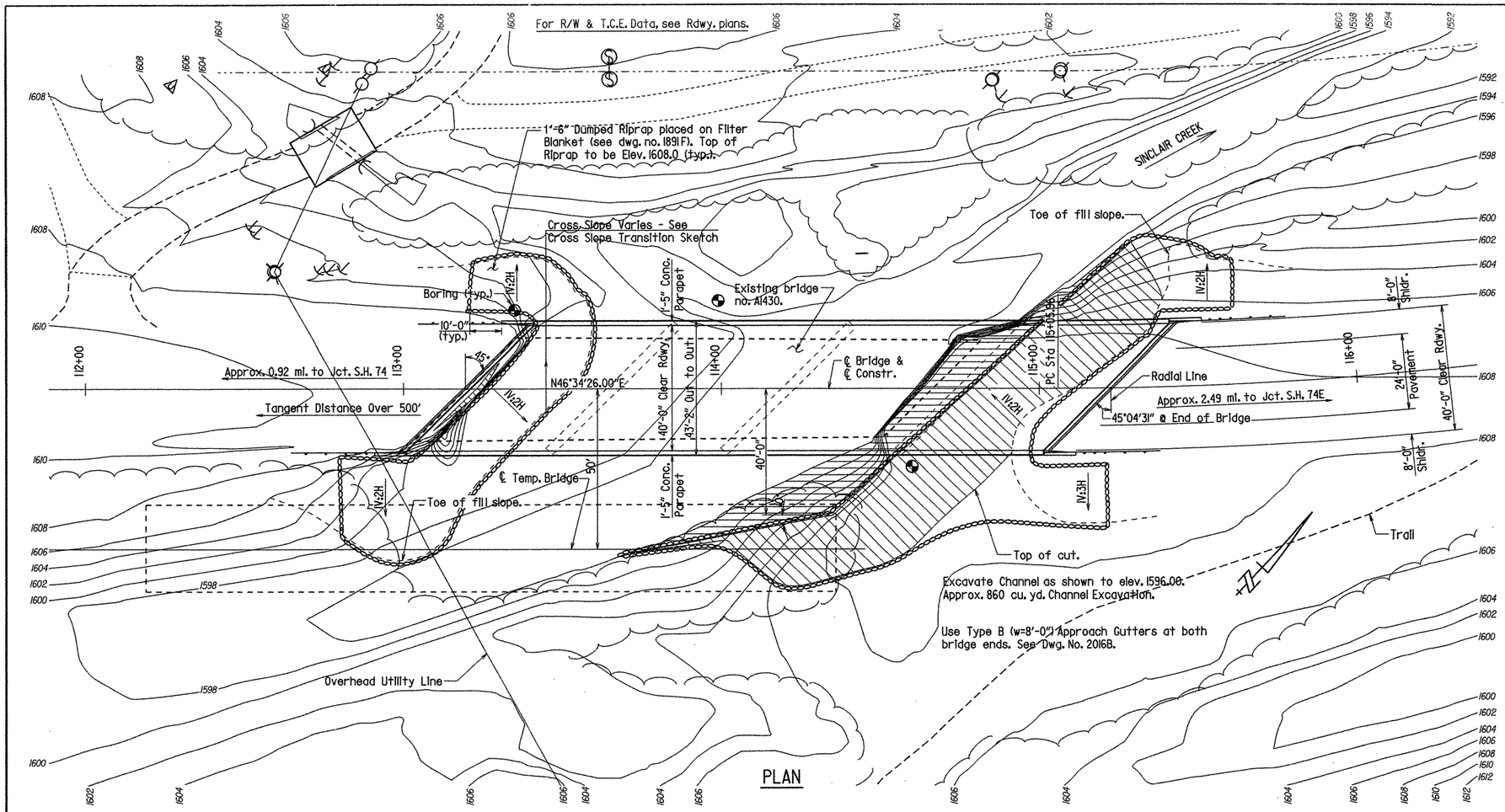

HORIZONTAL CURVE DATA
P.I. = Sta. 116+87.55
△ = 18°00'33" Lt.
D = 5°00'00"
T = 181.59'
L = 360.18'
R = 1145.92'

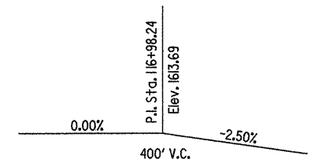

VERTICAL CURVE DATA
Gradeline at ℄ Bridge

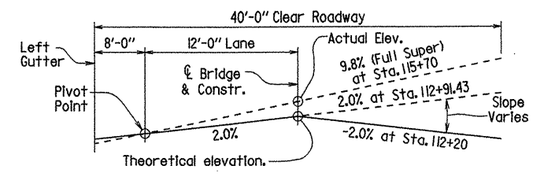

CROSS SLOPE TRANSITION SKETCH
Looking Ahead

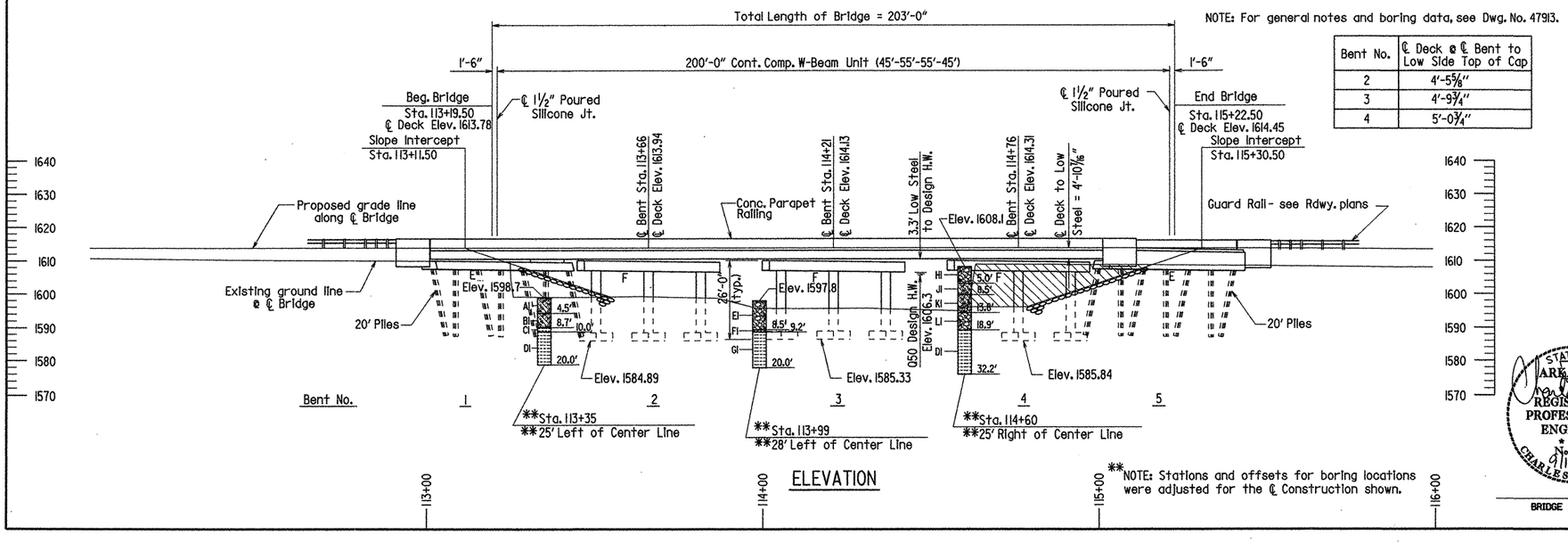

ELEVATION

NOTE: For general notes and boring data, see Dwg. No. 47913.

Bent No.	℄ Deck @ ℄ Bent to Low Side Top of Cap
2	4'-5⅝"
3	4'-9¾"
4	5'-0¾"

**NOTE: Stations and offsets for boring locations were adjusted for the ℄ Construction shown.

HYDRAULIC DATA

FLOOD DESCRIPTION	FREQUENCY	DISCHARGE	*NATURAL WATER SURFACE ELEVATION	WATER SURFACE ELEV. WITH BACKWATER
	YEARS	CFS	FEET	FEET
Design	50	5,590	1606.3	1609.4
Base	100	6,780	1607.3	1610.7
Extreme	500	8,090	1608.4	1612.0
Overtopping	> 500	NA	NA	NA

* Unconstricted water surface without structure or roadway approaches.
Drainage area = 7.3 square miles.
Historical H.W. Elev. = 1609.6

STATE OF ARKANSAS REGISTERED PROFESSIONAL ENGINEER No. 4337 CHARLES P. BRAND 01/15/05

BRIDGE ENGINEER

SHEET 1 OF 2
LAYOUT OF BRIDGE OVER
SINCLAIR CREEK
WEST FORK - SOUTH
(BRS. & APPRS.) (S)
WASHINGTON COUNTY
ROUTE 71 SEC. 16

ARKANSAS STATE HIGHWAY COMMISSION
LITTLE ROCK, ARK.

DRAWN BY: K.W.Y. DATE: 4-14-04 FILENAME: b004938x1.L1
CHECKED BY: CAB DATE: 9-05 SCALE: 1" = 20'
DESIGNED BY: KWY DATE: 4-04

BRIDGE NO. 07057 DRAWING NO. 47912

DATE REVISED	DATE FILMED	DATE REVISED	DATE FILMED	FED. ROAD DIST. NO.	STATE	FED. AID PROJ. NO.	SHEET NO.	TOTAL SHEETS
				6	ARK.			
				JOB NO.		004938	83	247
				(1) 07057		LAYOUT		47913

BORING LEGEND

AI-Moist to Wet, Medium Stiff, Brown Sandy, Silty Clay with Gravel
BI-Wet, Very Stiff, Gray and Brown Sandy, Silty Clay with Gravel
CI-Medium Hard to Hard, Dark Gray Weathered Shale
DI-Medium Hard, Dark Gray Shale with Gray Sandstone Seams
EI-Moist, Stiff, Brown Sandy, Silty Clay with Gravel and Cobbles
FI-Medium Hard, Gray Weathered Shale
GI-Medium Hard, Dark Gray Shale with Gray Sandstone Seams
HI-Moist, Medium Stiff, Brown Sandy, Silty Clay with Gravel and Cobbles
JI-Moist, Medium Stiff, Brown and Gray Sandy, Silty Clay with Gravel
KI-Moist, Very Stiff, Brown and Gray Sandy, Silty Clay with Gravel
LI-Wet, Very Stiff, Brown and Gray Sandy, Silty Clay with Gravel and Cobbles

"N" VALUES

*Sta. 113+35 - 25' Left of Center Line
5.0- 6.0, N=18
9.5- 9.6, N=60(0.1)

*Sta. 113+99 - 28' Left of Center Line
8.4- 8.7, N=60(0.3)

*Sta. 114+60 - 25' Right of Center Line
5.5- 6.5, N=7
9.0- 10.0, N=19
14.0- 15.0, N=20
19.0- 19.3, N=60(0.3)

*NOTE: Stations and offsets for boring locations were adjusted for the ℄ Construction shown.

GENERAL NOTES

BENCH MARK: Southeast corner of existing bridge, 14.66' Rt. of Sta. 113+07.12, Elev. 1610.56.

CONSTRUCTION SPECIFICATIONS: Arkansas State Highway and Transportation Department Standard Specifications for Highway Construction, (2003 edition) with applicable supplemental specifications and special provisions. Section and Subsection refer to the Standard Construction Specifications unless otherwise noted in the Plans.

DESIGN SPECIFICATIONS: AASHTO Standard Specification for Highway Bridges, (2002 Edition).

LIVE LOADING: HS20 METHOD OF DESIGN: Load Factor
SEISMIC PERFORMANCE CATEGORY: A

MATERIALS AND STRENGTHS

Class S(AE) Concrete (superstructure)	f'c = 4,000 psi
Class S Concrete (substructure)	f'c = 3,500 psi
Reinforcing Steel (AASHTO M31 or M53, Gr. 60)	fy = 60,000 psi
Structural Steel (AASHTO M270, Gr. 36)	Fy = 36,000 psi
Structural Steel (AASHTO M270, Gr. 50W)	Fy = 50,000 psi

BORING LOGS: Boring logs may be obtained from the Programs and Contracts Division.

PILING: All piling shall be HP12 x 53 and shall be driven with an approved air, steam or diesel hammer to a minimum safe bearing capacity of 70 tons per pile and into the material designated as medium hard shale on the boring legend. Lengths shown are for estimating quantities and for use in determining payment for cut-off and build-up in accordance with the specifications. Piles in end bents are to be driven after embankment to bottom of cap is in place. On all piles the Contractor shall use approved Steel H-Pile Driving Points. Actual pile lengths to be determined in the field.

FOOTINGS: Footings for Bents 2 thru 4 shall be set a minimum of 1'-6" into material designated as "DI" or "GI" on the boring legend with a minimum cover above top of footing of 2'-0". Foundations for footing shall be prepared in accordance with Section 801.04. Rock excavations shall be made to neat lines of the concrete footings. Care shall be exercised to avoid shattering of rock faces by excessive blasting. Concrete in footings shall be poured directly against excavated surface of rock.

BRIDGE DECK: The concrete bridge deck shall be given a tine finish as specified for final finishing in Subsection 802.19 for Class 5 Tined Bridge Roadway Surface Finish.

DETAIL DRAWINGS:	DRAWING NO.
200'-0" Cont. Comp. W-Beam Unit	47921 - 47929
End Bents	47914, 47915, 47919, 47920
Int. Bents	47916 - 47918
Elastomeric Bearings	47930
Steel Piling	14995A
Type B Approach Gutters	2016B

EXISTING BRIDGE: The existing four-span bridge, no. A1430, (L.M. 4.36) is 140' long and 31.8' wide and consists of a concrete superstructure supported by a concrete substructure.

REMOVAL AND SALVAGE: The existing bridge, no. A1430, shall be removed in accordance with Section 205 of the Standard Specifications. All material from the existing bridge shall become the property of the Contractor.

TEMPORARY BRIDGE: Construct a temporary bridge approximately 50' upstream from centerline of the proposed bridge with a minimum deck elevation of 1607.00. See Roadway Plans for actual detour grade and alignment. The temporary bridge shall be a minimum of 217' long with minimum span lengths of 31', a minimum roadway width of 24' and a minimum live load capacity of H15. See Section 603 of the Standard Specifications and drawing numbers 2465 - 2467 for standard temporary bridge details. A timber deck is not allowed. If timber piling and pine timber are used on this temporary bridge structure, the materials shall be treated with a preservative according to the Standard Specifications.

MAINTENANCE OF TRAFFIC: See Roadway Plans.

STATE OF ARKANSAS
REGISTERED PROFESSIONAL ENGINEER
No. 4937
9/15/05
CHARLES P. BRAND

BRIDGE ENGINEER

SHEET 2 OF 2
LAYOUT OF BRIDGE OVER
SINCLAIR CREEK
WEST FORK - SOUTH
(BRS. & APPRS.) (S)
WASHINGTON COUNTY
ROUTE 71 SEC. 16

ARKANSAS STATE HIGHWAY COMMISSION
LITTLE ROCK, ARK.

DRAWN BY: K.W.Y. DATE: 5-27-04 FILENAME: b004938x1.L1
CHECKED BY: CAB DATE: 9-05 SCALE: no scale
DESIGNED BY: KWY DATE: 4-04

BRIDGE NO. 07057 DRAWING NO. 47913

DATE REVISED	DATE FILMED	DATE REVISED	DATE FILMED	FED. ROAD DIST. NO.	STATE	FED. AID PROJ. NO.	SHEET NO.	TOTAL SHEETS
				6	ARK.			
				JOB NO.		004938	84	247
				1	07057	END BENTS		47914

For details of wings, see Dwg. No. 47915.

NOTE: Class I Protective Surface Treatment shall be applied to the top of the backwall and to the rdwy. face and top of the wing rails.

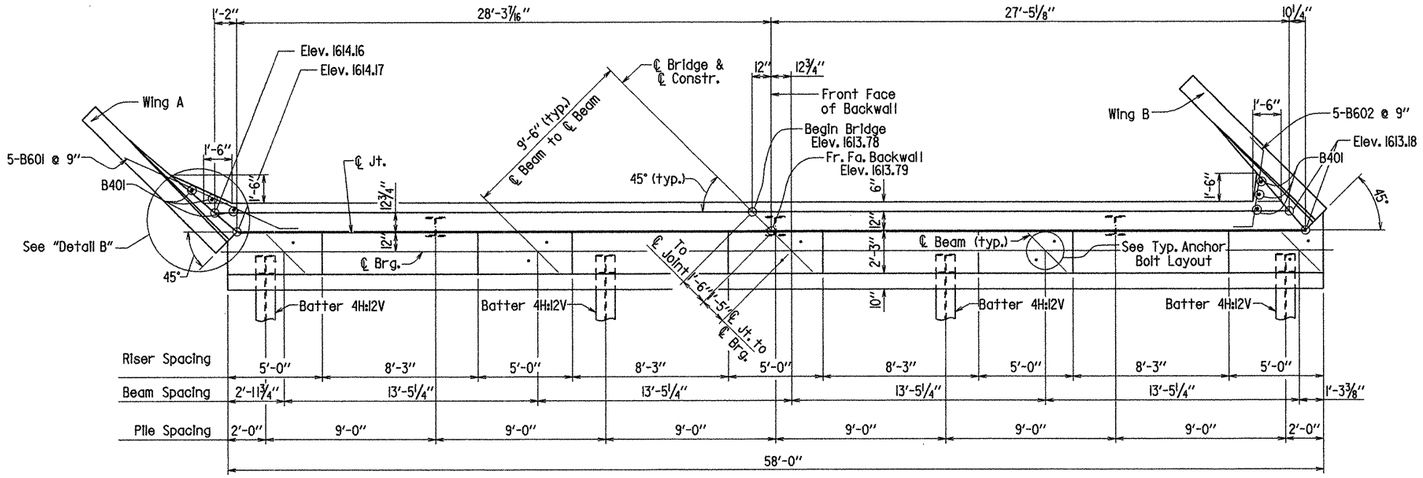

PLAN

1/4" = 1'-0"

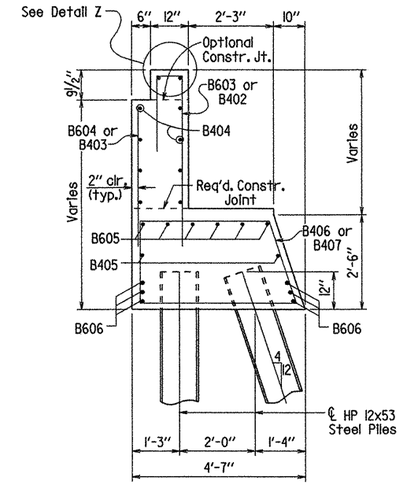

SECTION A-A

Scale: 1/2" = 1'-0"

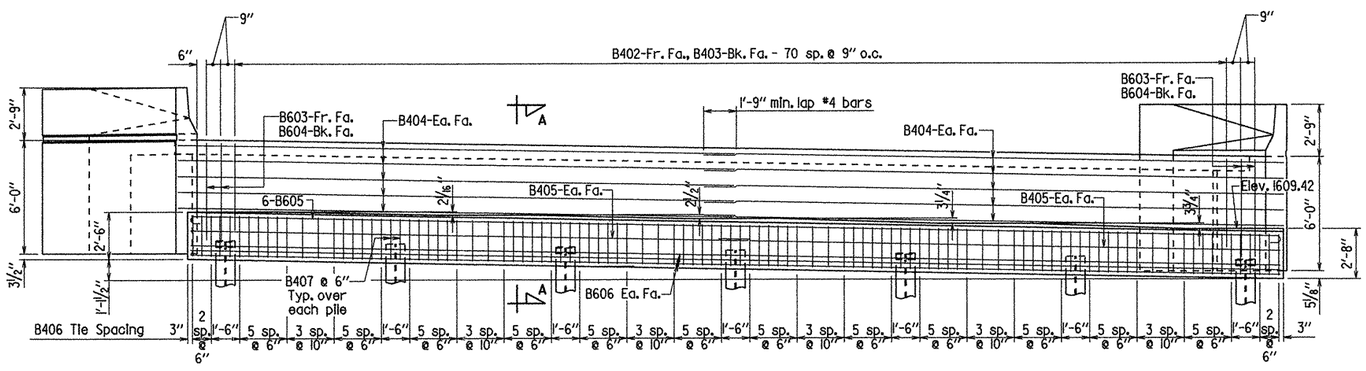

ELEVATION

Looking Back
1/4" = 1'-0"

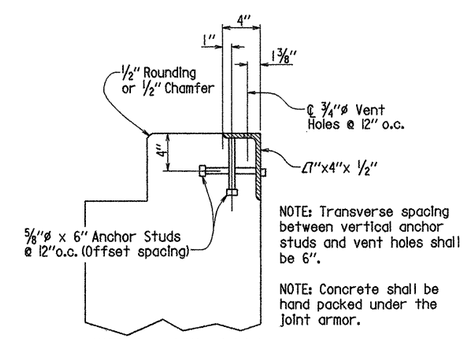

NOTE: Transverse spacing between vertical anchor studs and vent holes shall be 6".

NOTE: Concrete shall be hand packed under the joint armor.

NOTE: For additional joint details, see Dwg. No. 47929.

DETAIL Z

No Scale

For general notes, see Dwg. No. 47915.

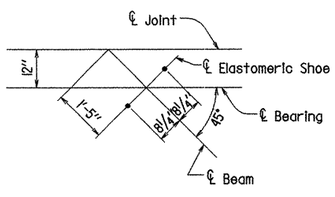

For details of elastomeric bearings, see Dwg. No. 47930.

ANCHOR BOLT LAYOUT

No Scale

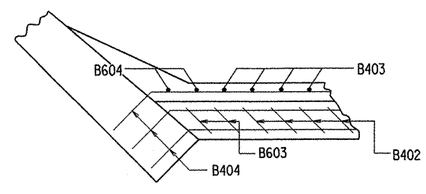

DETAIL B

Shown for Wing A
Wing B similar
Scale: 1/2" = 1'-0"

STATE OF ARKANSAS
REGISTERED PROFESSIONAL ENGINEER
No. 4337
9/15/05
CHARLES P. BRAND

BRIDGE ENGINEER

SHEET 1 OF 2
DETAILS OF BENT 1
SINCLAIR CREEK

ROUTE SEC.

ARKANSAS STATE HIGHWAY COMMISSION

LITTLE ROCK, ARK.

DRAWN BY: K.W.Y. DATE: 8-17-05 FILENAME: b004938X1_b11.dgn
CHECKED BY: CAS DATE: 9-05 SCALE: as noted
DESIGNED BY: KWY DATE: 8-05

BRIDGE NO. 07057 DRAWING NO. 47914

DATE REVISED	DATE FILMED	DATE REVISED	DATE FILMED	FED. ROAD DIST. NO.	STATE	FED. AID PROJ. NO.	SHEET NO.	TOTAL SHEETS
				6	ARK.			
				JOB NO.		004938	85	247
				07057		END BENTS		47915

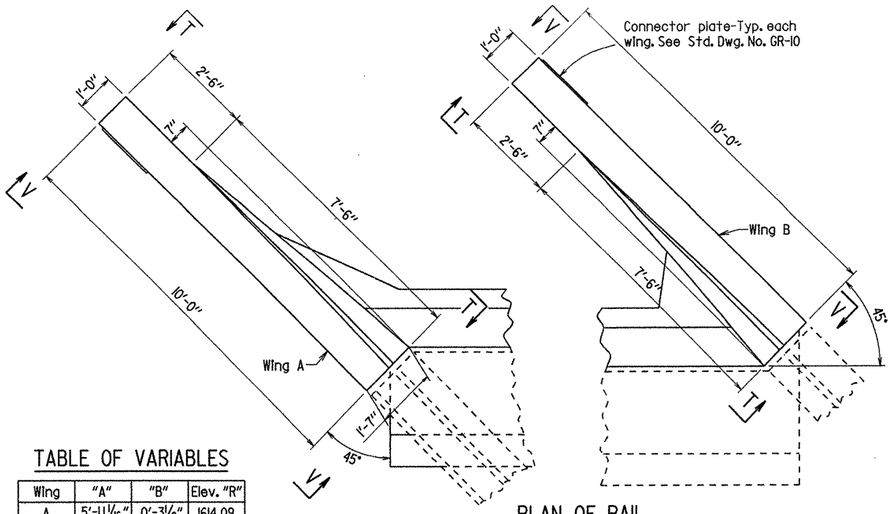

TABLE OF VARIABLES

Wing	"A"	"B"	Elev. "R"
A	5'-11 1/16"	0'-3 1/2"	1614.09
B	6'-0 1/4"	0'-5 1/8"	1613.20

PLAN OF RAIL

3/8" = 1'-0"

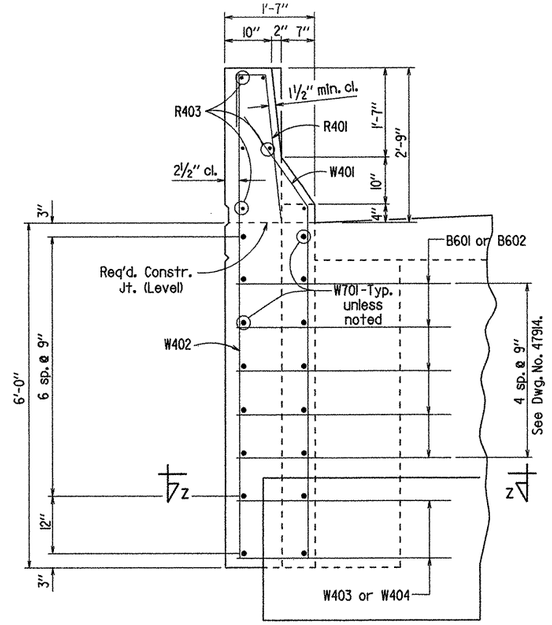

VIEW W-W

3/4" = 1'-0"

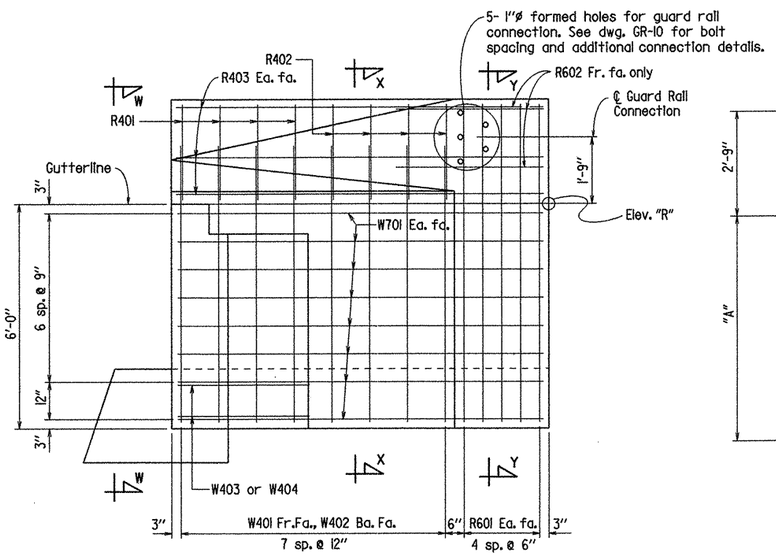

VIEW T-T

No Scale

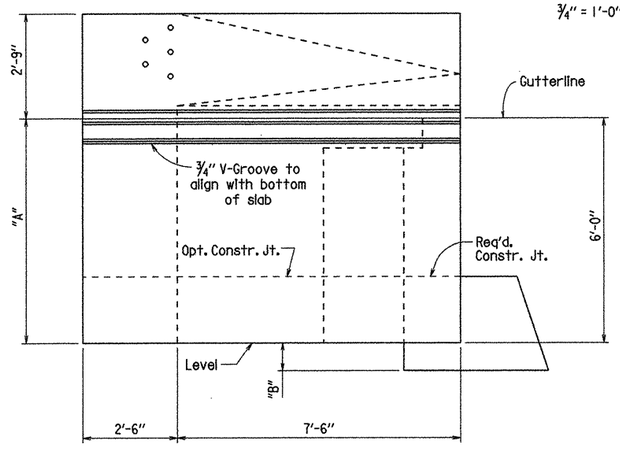

VIEW V-V

No Scale

BAR LIST

MARK	NO. REQ'D.	LENGTH	P.D.
B401	6	4'-10"	Str.
B402	71	7'-7"	2"
B403	71	4'-0"	Str.
B404	20	30'-6"	2"
B405	4	29'-9"	Str.
B406	90	12'-5"	2"
B407	14	7'-8"	2"
R401	8	3'-11"	2"
R402	8	4'-0"	2"
R403	12	9'-8"	Str.
W401	8	8'-1"	2"
W402	8	8'-5"	Str.
W403	2	11'-3"	2"
W404	2	7'-6"	2"
B601	5	9'-10"	4 1/2"
B602	5	5'-10"	4 1/2"
B603	4	8'-0"	4 1/2"
B604	4	4'-6"	Str.
B605	6	59'-0"	4 1/2"
B606	6	57'-8"	Str.
R601	20	7'-5"	Str.
R602	6	5'-0"	Str.
W701	32	9'-8"	Str.

BENDING DIAGRAMS

Dimensions are out to out of bars.

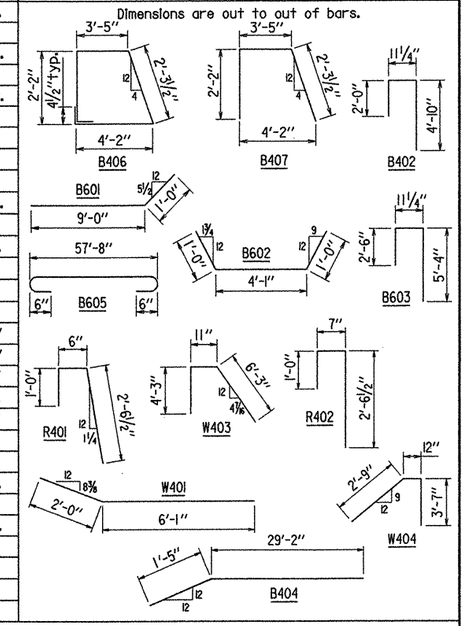

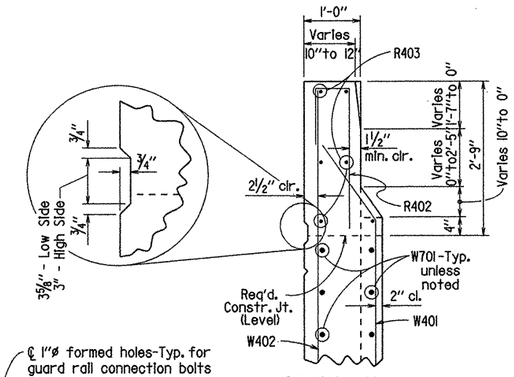

SECTION X-X

3/4" = 1'-0"

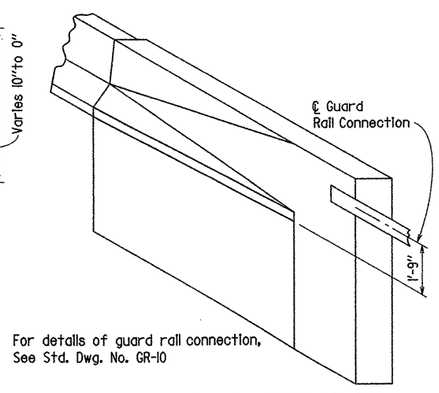

For details of guard rail connection, See Std. Dwg. No. GR-10

THREE DIMENSIONAL VIEW OF RAIL

No Scale

GENERAL NOTES

All concrete shall be Class S and shall be poured in the dry. All exposed corners to be chamfered 3/4" unless otherwise noted.

All reinforcing steel shall conform to AASHTO M31 or M53, Grade 60.

The backwall below the paving bracket shall not be poured before the beams are in place. The backwall above the paving bracket shall not be poured before the superstructure slab has been placed.

Structural steel in end bents shall be AASHTO M270, Gr. 50W and shall be paid for as "Structural Steel in Beam Spans (M270, Gr. 50W)".

If anchor bolts are drilled into cap, top reinforcing bars shall be placed to avoid damage.

For additional information, see Layout.

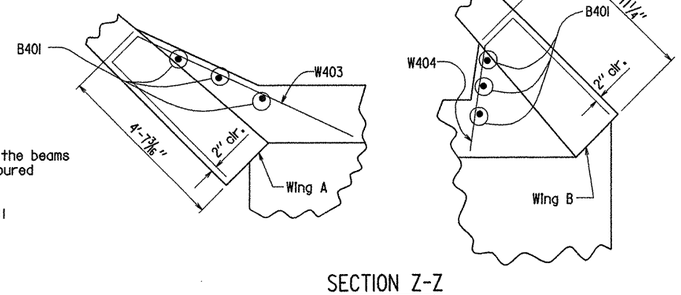

SECTION Z-Z

Scale: 3/8" = 1'-0"

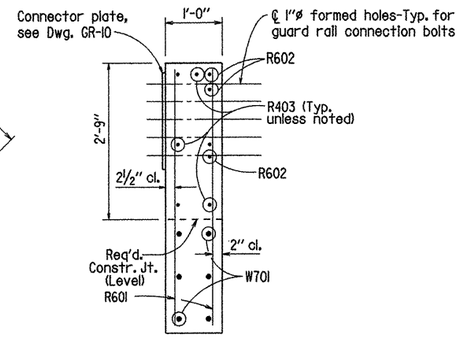

SECTION Y-Y

3/4" = 1'-0"

STATE OF ARKANSAS REGISTERED PROFESSIONAL ENGINEER No. 4337 9/15/05 CHARLES P. BRAND

BRIDGE ENGINEER

SHEET 2 OF 2
DETAILS OF BENT 1
SINCLAIR CREEK

ROUTE SEC.

ARKANSAS STATE HIGHWAY COMMISSION

LITTLE ROCK, ARK.

DRAWN BY: K.W.Y. DATE: 8-17-05 FILENAME: b004938xl_bl2.dgn
CHECKED BY: CAB DATE: 9-05 SCALE: as noted
DESIGNED BY: K.W.Y. DATE: 8-05

BRIDGE NO. 07057 DRAWING NO. 47915

DATE REVISED	DATE FILMED	DATE REVISED	DATE FILMED	FED. ROAD DIST. NO.	STATE	FED. AID PROJ. NO.	SHEET NO.	TOTAL SHEETS
12-16-08				6	ARK.			
				JOB NO.		004938	86	247
				1 07057		INT. BENTS		47916

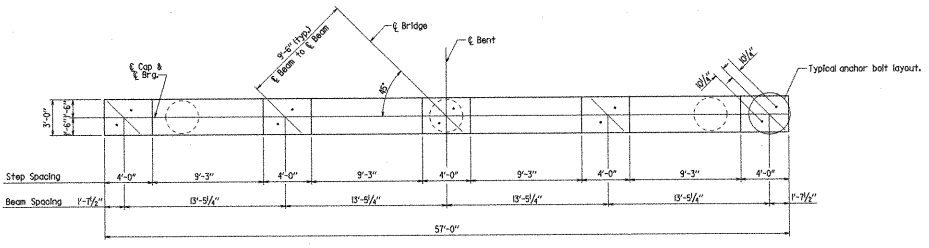

PLAN
1/4" = 1'-0"

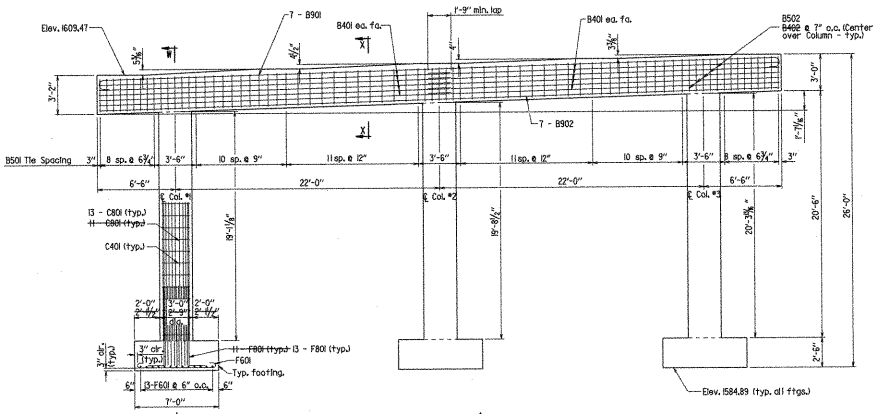

ELEVATION
Looking Ahead
1/4" = 1'-0"

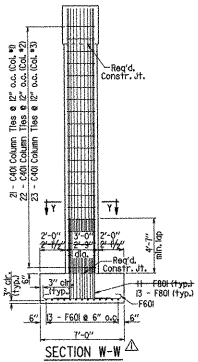

SECTION W-W
1/4" = 1'-0"

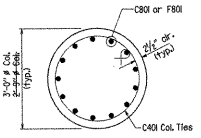

SECTION Y-Y
3/4" = 1'-0"

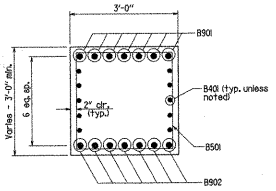

SECTION X-X
3/4" = 1'-0"

BAR LIST

Mark	No. Req'd.	Length	A	B	Pin Dia.
B401	20	29'-3"			Str.
B501	62	11'-2"	2'-8"	2'-8"	2 1/2"
B502	15	7'-10"	2'-8"	2'-8"	2 1/2"
B901	7	59'-2"	56'-8"	10"	9"
B902	7	56'-8"			Str.
		9'-3"			
C401	66	~~8'-5"~~	See Bending Diagram		
C801	~~33~~	~~"C"~~			Str.
	39				
F601	78	7'-10"	6'-6"	6"	4 1/2"
F801	~~39~~	9'-9"	8'-7"	1'-4"	6"
	39				

Bending Diagrams

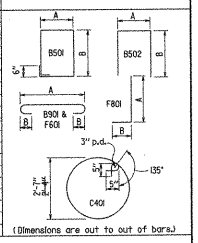

GENERAL NOTES

All concrete shall be Class "S" and shall be poured in the dry. All exposed corners to be chamfered 3/4" unless otherwise noted.

All reinforcing steel shall conform to AASHTO M31 or M53, Grade 60.

If anchor bolts are drilled into cap, top reinforcing bars shall be properly placed to avoid damage.

For additional information see Layout.

For details of elastomeric bearings see dwg. no. 47930.

TABLE OF VARIABLES

Col.	"C"
1	21'-10"
2	22'-5"
3	23'-1"

1 Changed column diameter from 2'-9" to 3'-0" as per contractor's request. See Change Order No. 3, KDH 12-16-08

STATE OF ARKANSAS C. A. R. DUNN REGISTERED PROFESSIONAL ENGINEER No. 4337 12/13/08 CHARLES R. DUNN

BRIDGE ENGINEER

DETAILS OF BENT 2
SINCLAIR CREEK
WASHINGTON COUNTY
ROUTE SEC.
ARKANSAS STATE HIGHWAY COMMISSION
LITTLE ROCK, ARK.

DRAWN BY: K.W.Y. DATE: 8-30-04 FILENAME: b004938xl.b2ldgn
CHECKED BY: CAD DATE: 9-05 SCALE: as noted
DESIGNED BY: K.W.Y. DATE: 8-04

BRIDGE NO. 07057 DRAWING NO. 47916

DATE REVISED	DATE FILMED	DATE REVISED	DATE FILMED
12-16-08			

FED. ROAD DIST. NO.	STATE	FED. AID PROJ. NO.	SHEET NO.	TOTAL SHEETS
6	ARK.			
JOB NO.		004938	87	247
1 07057		INT. BENTS		47917

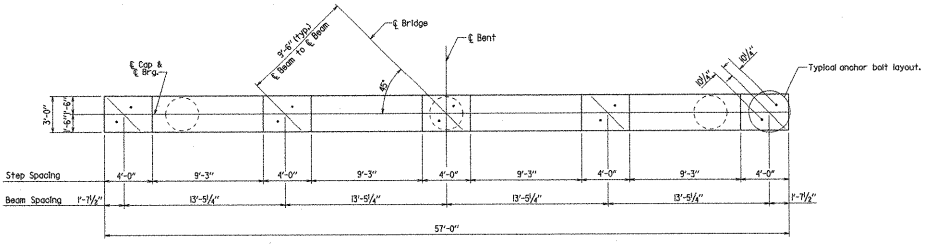

PLAN
1/4" = 1'-0"

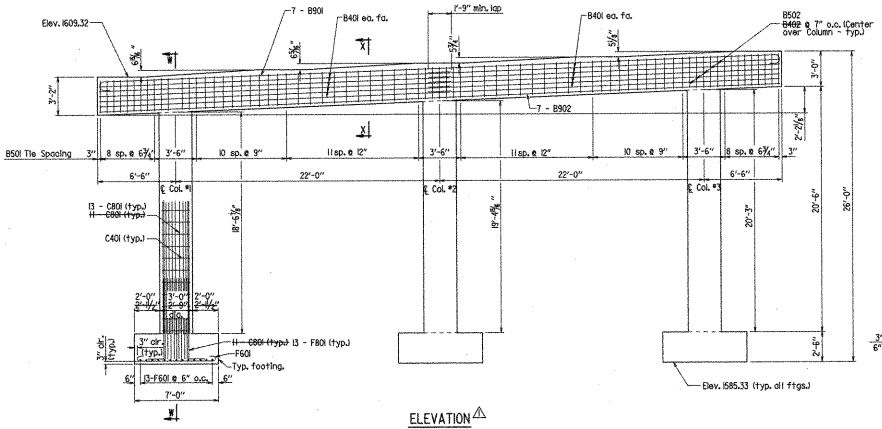

ELEVATION
Looking Ahead
1/4" = 1'-0"

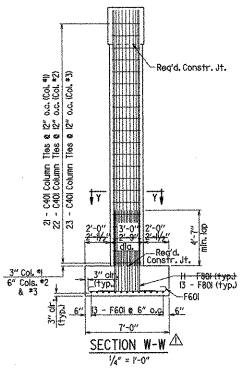

SECTION W-W
1/4" = 1'-0"

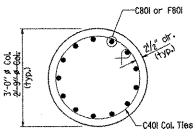

SECTION Y-Y
3/4" = 1'-0"

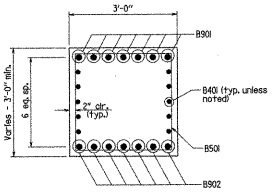

SECTION X-X
3/4" = 1'-0"

BAR LIST

Mark	No. Req'd.	Length	A	B	Pin Dia.
B401	20	29'-3"			Str.
B501	62	11'-2"	2'-8"	2'-8"	2 1/2"
B502	15	7'-10"	2'-8"	2'-8"	2 1/2"
B901	7	59'-2"	56'-8"	10"	9"
B902	7	56'-8"			Str.
		9'-3"			
C401	66	8'-5"	See Bending Diagram		
C801	~~55~~	"C"			Str.
	39				
F601	78	7'-10"	6'-6"	6"	4 1/2"
F801	~~55~~	9'-9"	8'-7"	1'-4"	6"
	39				

Bending Diagrams

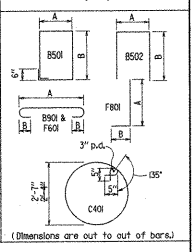

GENERAL NOTES

All concrete shall be Class "S" and shall be poured in the dry. All exposed corners to be chamfered 3/4" unless otherwise noted.

All reinforcing steel shall conform to AASHTO M31 or M53, Grade 60.

If anchor bolts are drilled into cap, top reinforcing bars shall be properly placed to avoid damage.

For additional information see Layout.

For details of elastomeric bearings see dwg. no. 47930.

TABLE OF VARIABLES

Col.	"C"
1	27'-5"
2	22'-2"
3	23'-0"

⚠ Changed column diameter from 2'-9" to 3'-0" as per contractor's request. See Change Order No. 3. KDH 12-16-08

STATE OF ARKANSAS No. 4337 REGISTERED PROFESSIONAL ENGINEER CHARLES P. BRAND

BRIDGE ENGINEER

DETAILS OF BENT 3
SINCLAIR CREEK
WASHINGTON COUNTY
ROUTE SEC.
ARKANSAS STATE HIGHWAY COMMISSION
LITTLE ROCK, ARK.

DRAWN BY: K.W.Y. DATE: 8-30-04 FILENAME: b004938xl_b31.dgn
CHECKED BY: CAB DATE: 9-05 SCALE: as noted
DESIGNED BY: K.W.Y DATE: 7-04
BRIDGE NO. 07057 DRAWING NO. 47917

DATE REVISED	DATE FILMED	DATE REVISED	DATE FILMED	FED. ROAD DIST. NO.	STATE	FED. AID PROJ. NO.	SHEET NO.	TOTAL SHEETS
12-16-08				6	ARK.			
				JOB NO.		004938	88	247
				1 07057		INT. BENTS		47918

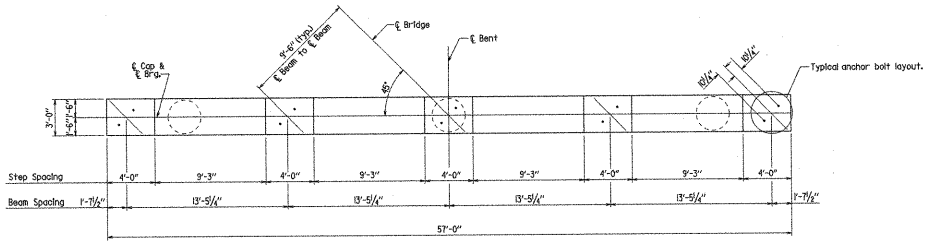

PLAN
¼" = 1'-0"

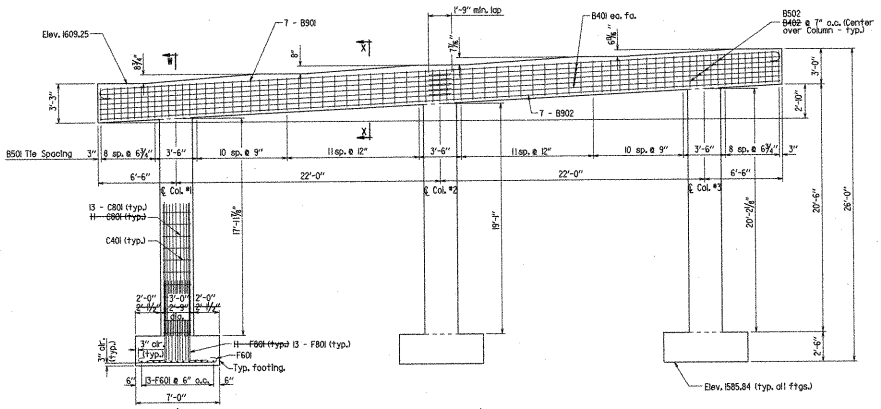

ELEVATION ⚠
Looking Ahead
¼" = 1'-0"

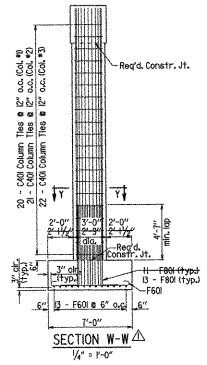

SECTION W-W ⚠
¼" = 1'-0"

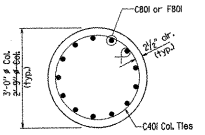

SECTION Y-Y ⚠
¾" = 1'-0"

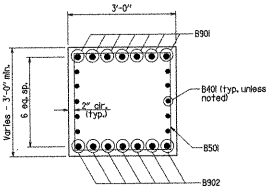

SECTION X-X
¾" = 1'-0"

BAR LIST ⚠

Mark	No. Req'd.	Length	A	B	Pin Dia.
B40I	20	29'-3"			Str.
B50I	62	11'-2"	2'-8"	2'-8"	2½"
B502	15	7'-10"	2'-8"	2'-8"	2½"
B90I	7	59'-2"	56'-8"	10"	9"
B902	7	56'-8"			Str.
		9'-3"			
C40I	63	~~8'-5"~~	See Bending Diagram		
C80I	~~31~~	"C"			Str.
	39				
F60I	78	7'-10"	6'-6"	6"	4½"
F80I	~~23~~	9'-9"	8'-7"	1'-4"	6"
	39				

Bending Diagrams

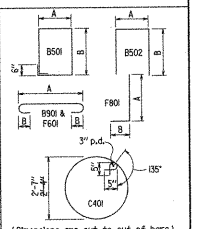

(Dimensions are out to out of bars.)

TABLE OF VARIABLES

Col.	"C"
1	20'-10"
2	21'-10"
3	22'-11"

⚠ Changed column diameter from 2'-9" to 3'-0" as per contractor's request. See Change Order No. 3. KDH 12-16-08

GENERAL NOTES

All concrete shall be Class "S" and shall be poured in the dry. All exposed corners to be chamfered ¾" unless otherwise noted.

All reinforcing steel shall conform to AASHTO M31 or M53, Grade 60.

If anchor bolts are drilled into cap, top reinforcing bars shall be properly placed to avoid damage.

For additional information see Layout.

For details of elastomeric bearings see dwg. no. 47930.

STATE OF ARKANSAS 12/16/08 REGISTERED PROFESSIONAL ENGINEER No. 4337 CHARLES B. BRANDT

BRIDGE ENGINEER

DETAILS OF BENT 4
SINCLAIR CREEK
WASHINGTON COUNTY
ROUTE SEC.
ARKANSAS STATE HIGHWAY COMMISSION
LITTLE ROCK, ARK.

DRAWN BY: K.W.Y. DATE: 8-30-04 FILENAME: b004938xl_b4l.dgn
CHECKED BY: CAB DATE: 9-05 SCALE: as noted
DESIGNED BY: K.W.Y. DATE: 8-04
BRIDGE NO. 07057 DRAWING NO. 47918

DATE REVISED	DATE FILMED	DATE REVISED	DATE FILMED	FED. ROAD DIST. NO.	STATE	FED. AID PROJ. NO.	SHEET NO.	TOTAL SHEETS
				6	ARK.			
				JOB NO.		004938	89	247
				1	07057	END BENTS		47919

*Horizontal curve begins at Sta. 115+05.96.

For details of wings, see Dwg. No. 47920.

NOTE: Class I Protective Surface Treatment shall be applied to the top of the backwall and to the rdwy. face and top of the wing rails.

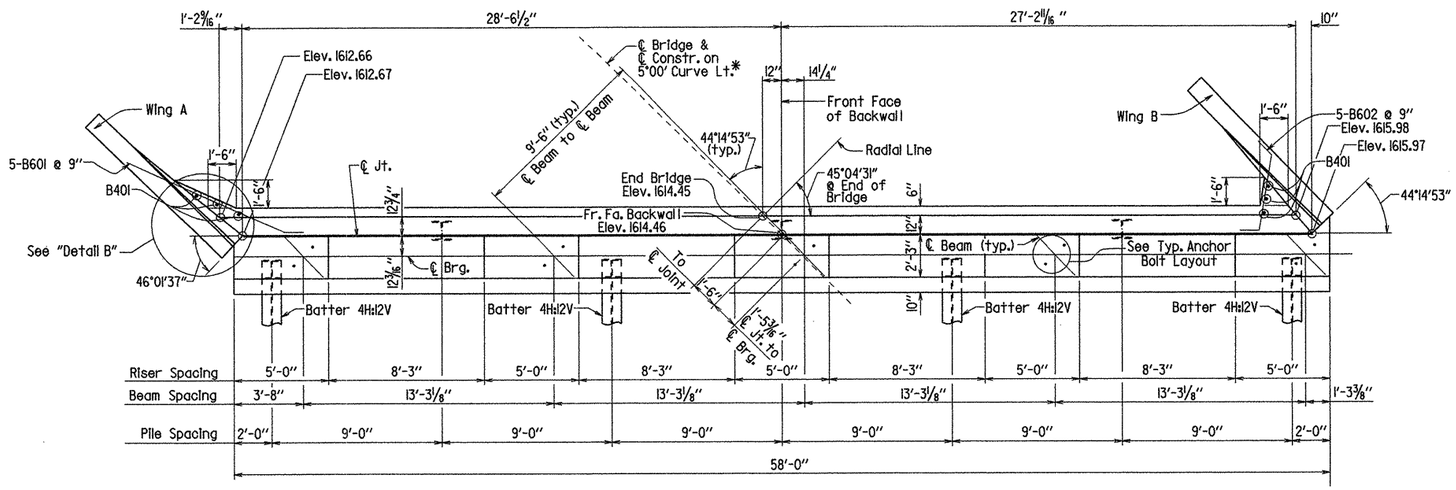

PLAN

1/4" = 1'-0"

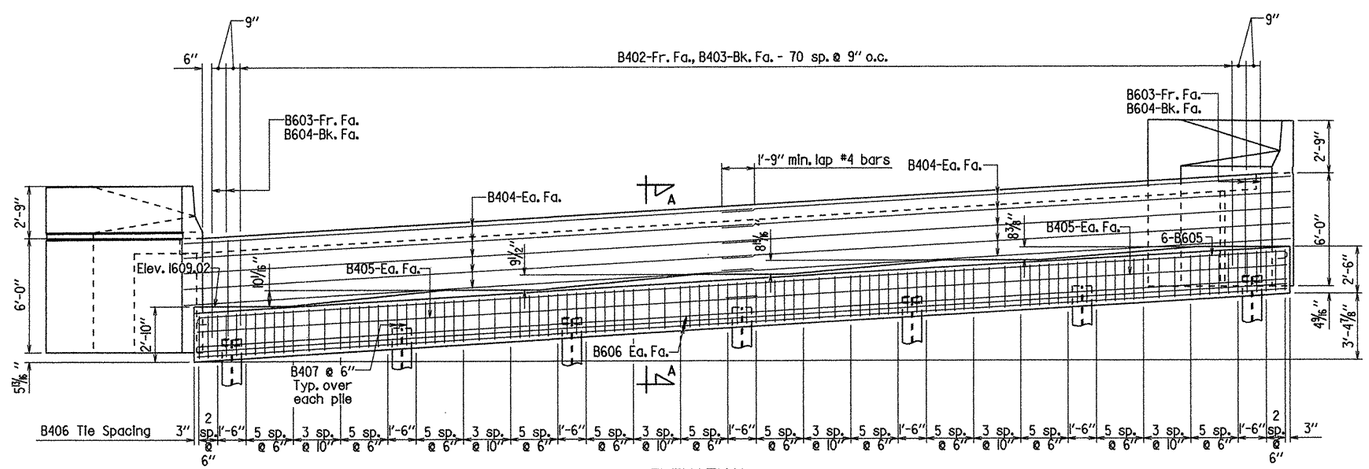

ELEVATION

Looking Ahead
1/4" = 1'-0"

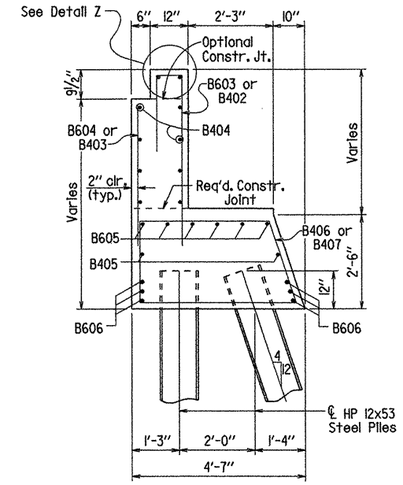

SECTION A-A

Scale: 1/2" = 1'-0"

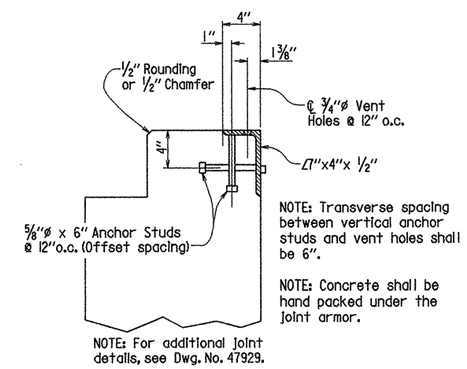

NOTE: Transverse spacing between vertical anchor studs and vent holes shall be 6".

NOTE: Concrete shall be hand packed under the joint armor.

NOTE: For additional joint details, see Dwg. No. 47929.

DETAIL Z

No Scale

For general notes, see Dwg. No. 47920.

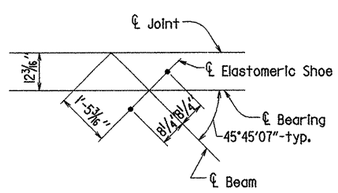

For details of elastomeric bearings, see Dwg. No. 47930.

ANCHOR BOLT LAYOUT

No Scale

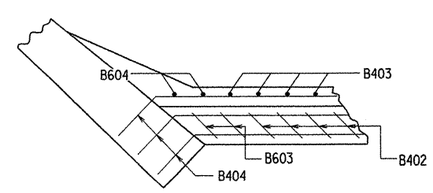

DETAIL B

Shown for Wing A
Wing B similar
Scale: 1/2" = 1'-0"

STATE OF ARKANSAS
REGISTERED PROFESSIONAL ENGINEER
No. 4337
9/15/05
CHARLES P. BRAND

BRIDGE ENGINEER

SHEET 1 OF 2
DETAILS OF BENT 5
SINCLAIR CREEK

ROUTE SEC.

ARKANSAS STATE HIGHWAY COMMISSION

LITTLE ROCK, ARK.

DRAWN BY: K.W.Y. DATE: 8-17-05 FILENAME: b004938X1_b51.dgn
CHECKED BY: CAG DATE: 9-05 SCALE: as noted
DESIGNED BY: KWY DATE: 8-05

BRIDGE NO. 07057 DRAWING NO. 47919

DATE REVISED	DATE FILMED	DATE REVISED	DATE FILMED	FED. ROAD DIST. NO.	STATE	FED. AID PROJ. NO.	SHEET NO.	TOTAL SHEETS
				6	ARK.			
				JOB NO.		004938	90	247
				1 07057	END BENTS		47920	

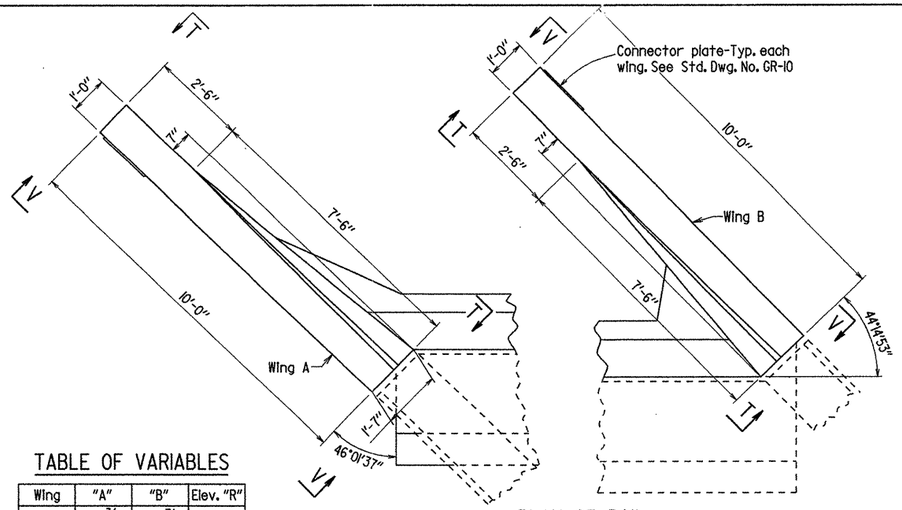

TABLE OF VARIABLES

Wing	"A"	"B"	Elev. "R"
A	5'-11 3/8"	0'-5 9/16"	1612.62
B	6'-1 1/16"	0'-4 9/16"	1616.06

PLAN OF RAIL

3/8" = 1'-0"

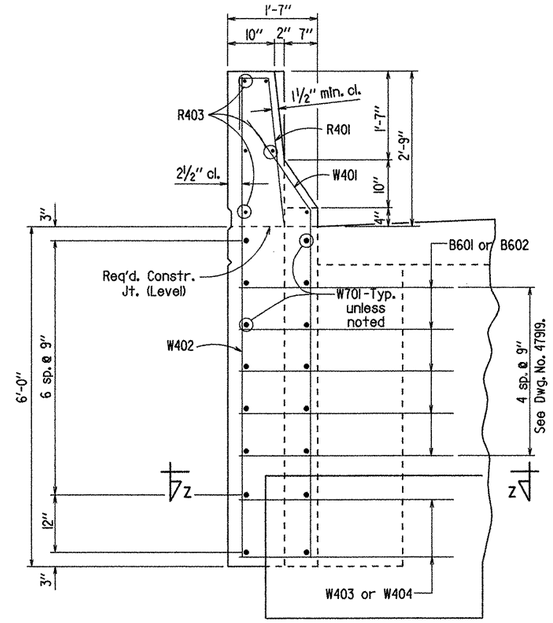

VIEW W-W

3/4" = 1'-0"

BAR LIST

MARK	NO. REQ'D.	LENGTH	P.D.
B401	6	4'-10"	Str.
B402	71	7'-7"	2"
B403	71	4'-0"	Str.
B404	20	30'-6"	2"
B405	4	29'-9"	Str.
B406	90	12'-5"	2"
B407	14	7'-8"	2"
R401	8	3'-11"	2"
R402	8	4'-0"	2"
R403	12	9'-8"	Str.
W401	8	8'-1"	2"
W402	8	8'-5"	Str.
W403	2	11'-5"	2"
W404	2	7'-5"	2"
B601	5	10'-0"	4½"
B602	5	5'-10"	4½"
B603	4	8'-0"	4½"
B604	4	4'-6"	Str.
B605	6	59'-0"	4½"
B606	6	57'-8"	Str.
R601	20	7'-5"	Str.
R602	6	5'-0"	Str.
W701	32	9'-8"	Str.

BENDING DIAGRAMS

Dimensions are out to out of bars.

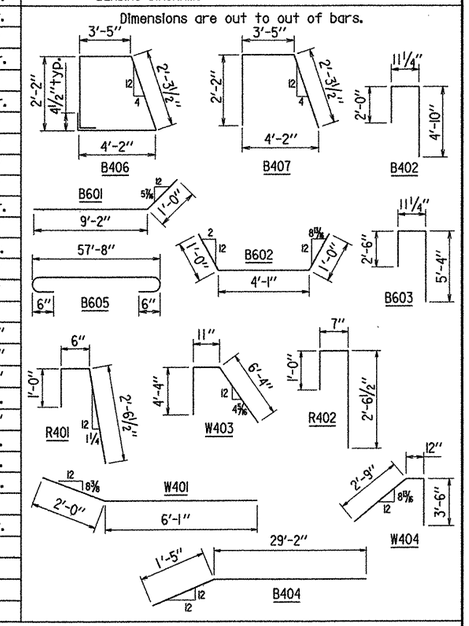

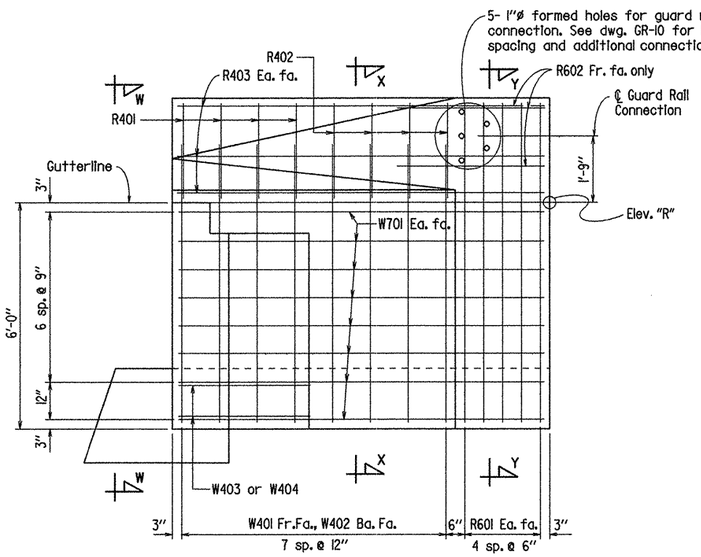

VIEW T-T

No Scale

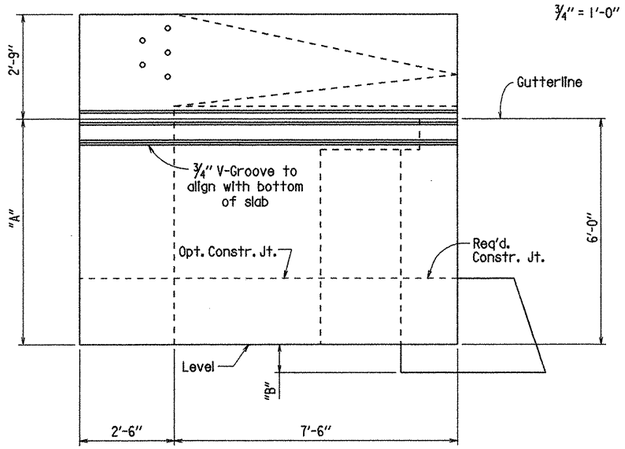

VIEW V-V

No Scale

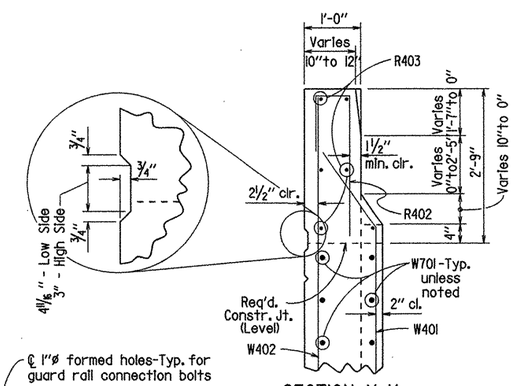

SECTION X-X

3/4" = 1'-0"

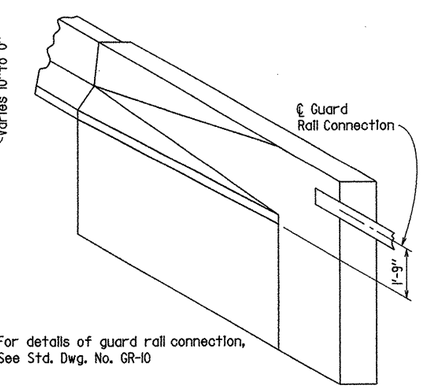

For details of guard rail connection, See Std. Dwg. No. GR-10

THREE DIMENSIONAL VIEW OF RAIL

No Scale

GENERAL NOTES

All concrete shall be Class S and shall be poured in the dry. All exposed corners to be chamfered ¾" unless otherwise noted.

All reinforcing steel shall conform to AASHTO M31 or M53, Grade 60.

The backwall below the paving bracket shall not be poured before the beams are in place. The backwall above the paving bracket shall not be poured before the superstructure slab has been placed.

Structural steel in end bents shall be AASHTO M270, Gr. 50W and shall be paid for as "Structural Steel in Beam Spans (M270, Gr. 50W)".

If anchor bolts are drilled into cap, top reinforcing bars shall be placed to avoid damage.

For additional information, see Layout.

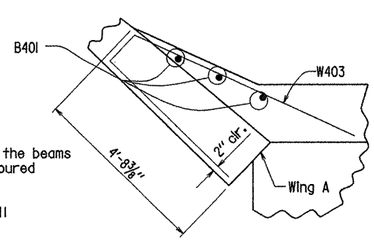

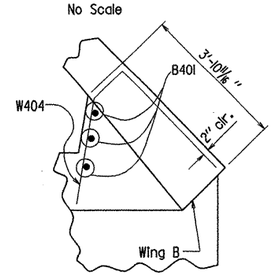

SECTION Z-Z

Scale: 3/8" = 1'-0"

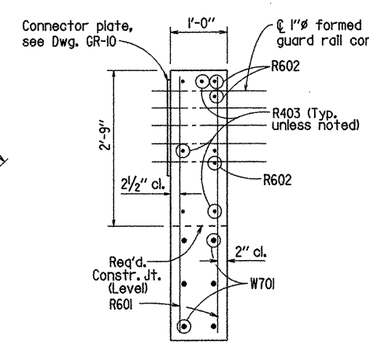

SECTION Y-Y

3/4" = 1'-0"

STATE OF ARKANSAS REGISTERED PROFESSIONAL ENGINEER No. 4337 9/15/05 CHARLES P. BRAND

BRIDGE ENGINEER

SHEET 2 OF 2
DETAILS OF BENT 5
SINCLAIR CREEK

ROUTE SEC.

ARKANSAS STATE HIGHWAY COMMISSION

LITTLE ROCK, ARK.

DRAWN BY: K.W.Y. DATE: 8-17-05 FILENAME: b004938xl_bl2.dgn
CHECKED BY: CAB DATE: 9-05 SCALE: as noted
DESIGNED BY: KWY DATE: 8-05

BRIDGE NO. 07057 DRAWING NO. 47920

DATE REVISED	DATE FILMED	DATE REVISED	DATE FILMED	FED. ROAD DIST. NO.	STATE	FED. AID PROJ. NO.	SHEET NO.	TOTAL SHEETS
				6	ARK.			
				JOB NO.		004938	91	247
				(1) 07057 -		200 FT. UNIT	- 47921	

NOTE: Class I Protective Surface Treatment shall be applied to the Roadway Surface and to the Face & Top of the Concrete Parapet Rail.

NOTE: At the Contractor's option, two straight epoxy coated #5 bars may be substituted for bar S502E. Payment for reinforcing will be based on the weight of bar S502E.

(1) See "Adustment for Slab and Haunch Thickness Tolerance."

(2) Tolerance: Minus = 1/4"; Plus equal to the amount of slab thickening used to meet slab thickness tolerance. See "Adustment for Slab and Haunch Thickness Tolerance."

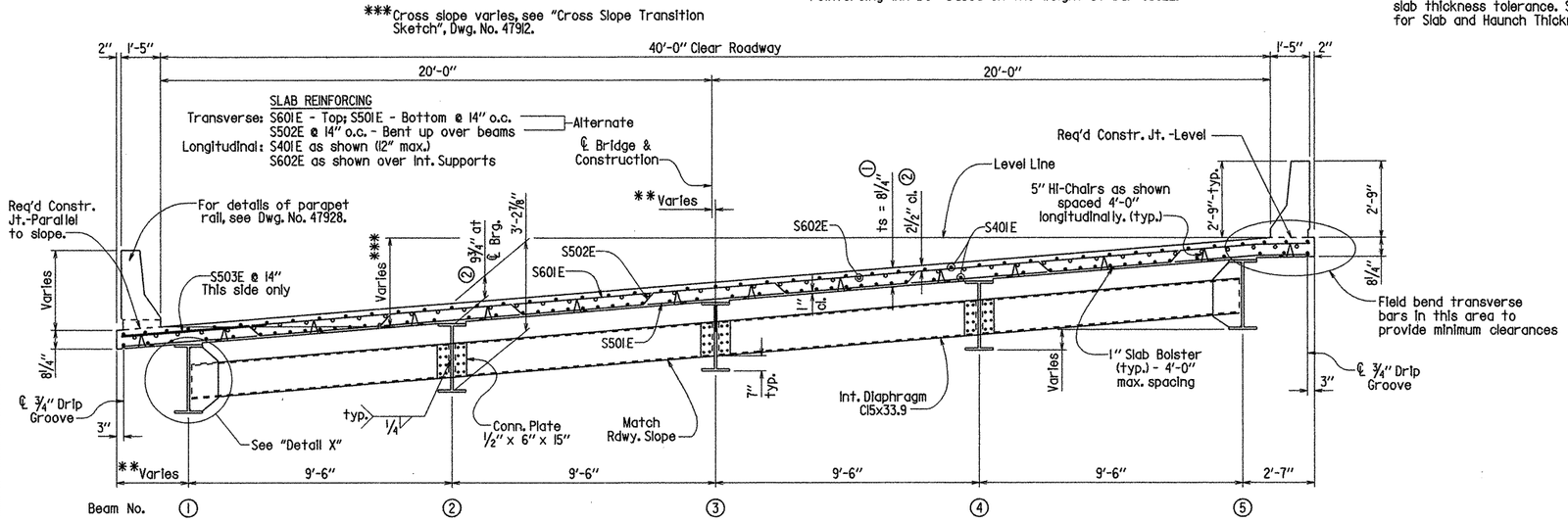

TYPICAL ROADWAY SECTION

Looking Ahead
Scale: 3/8" = 1'-0"

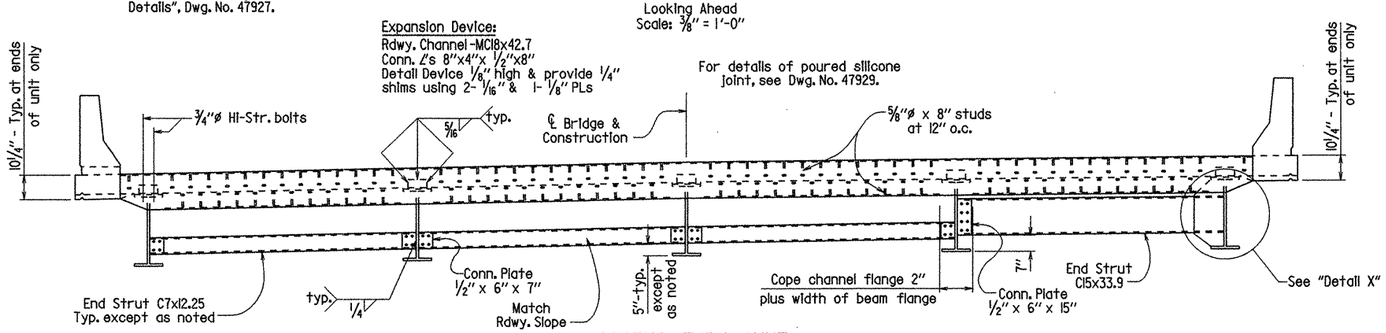

SECTION THRU JOINT

Looking Ahead - Bent 1
Scale: 3/8" = 1'-0"

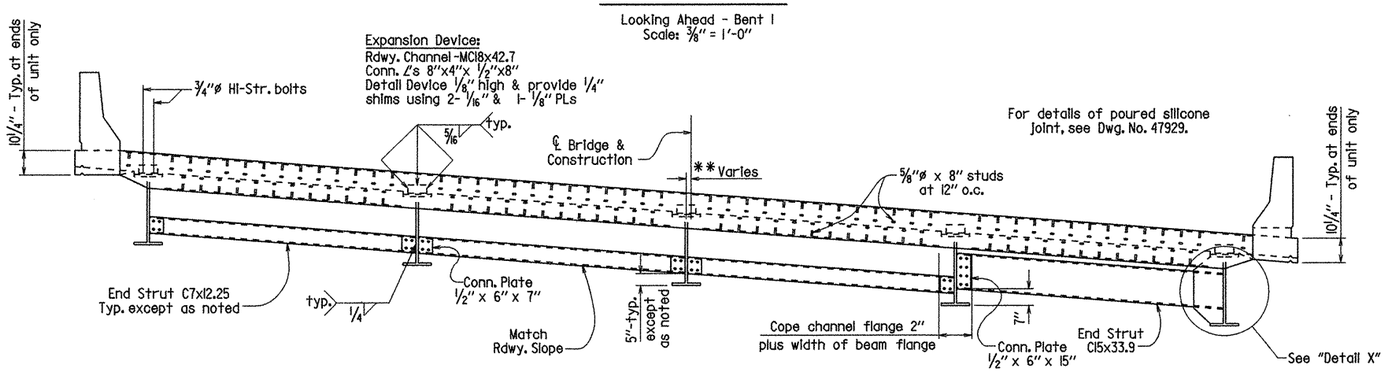

SECTION THRU JOINT

Looking Back - Bent 5
Scale: 3/8" = 1'-0"

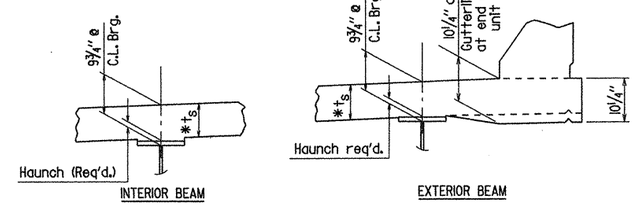

NOTE: t_s = slab thickness as shown in "Typical Roadway Section."

* Tolerance when removable deck forming is used is + 1/2", - 1/4". Haunch forming is required and shall be adjusted to maintain slab thickness tolerance.

ADJUSTMENT FOR SLAB AND HAUNCH THICKNESS TOLERANCE

No Scale

Haunch dimension may vary within the following limits to maintain the grade and slab thickness tolerance: Minimum - occurs when top flange contacts bottom reinforcing steel; Maximum - top flange thickness plus 1 1/2". No increase in concrete and structural steel quantities will be made to maintain tolerances.

Tolerances shown are applicable only when removable deck forming is used. See Std. Dwg. No. 14991 for tolerances when permanent steel deck forms are used. Payment for concrete shall be based on removable deck forming.

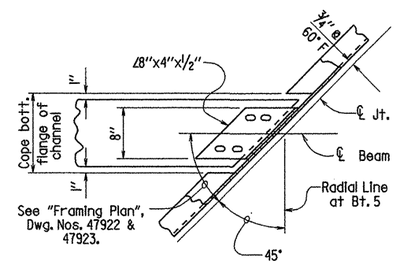

CHANNEL CONNECTION DETAIL

No Scale

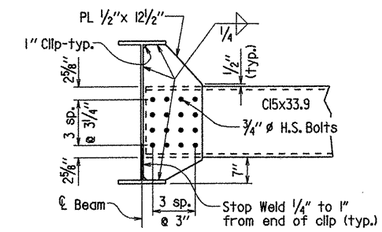

DETAIL X

No Scale

NOTE: Bolts in diaphragm connections shall be properly installed and tightened in accordance with Subsection 807.71 of the Standard Specifications.

STATE OF ARKANSAS
REGISTERED PROFESSIONAL ENGINEER
No. 4337
9/15/05
CHARLES P. BRAND

BRIDGE ENGINEER

SHEET 1 OF 8
DETAILS OF 200' CONTINUOUS COMPOSITE W-BEAM UNIT
SINCLAIR CREEK

ROUTE SEC.

ARKANSAS STATE HIGHWAY COMMISSION

LITTLE ROCK, ARK.

DRAWN BY: KDH DATE: 8-9-04 FILENAME: b004938xl_sl.dgn
CHECKED BY: KWY DATE: 9-15-05 SCALE: AS NOTED
DESIGNED BY: KWY DATE: 7-04

BRIDGE NO. 07057 DRAWING NO. 47921

DATE REVISED	DATE FILMED	DATE REVISED	DATE FILMED	FED. ROAD DIST. NO.	STATE	FED. AID PROJ. NO.	SHEET NO.	TOTAL SHEETS
				6	ARK.			
				JOB NO.		004938	92	247
				(1) 07057 -		200 FT. UNIT	- 47922	

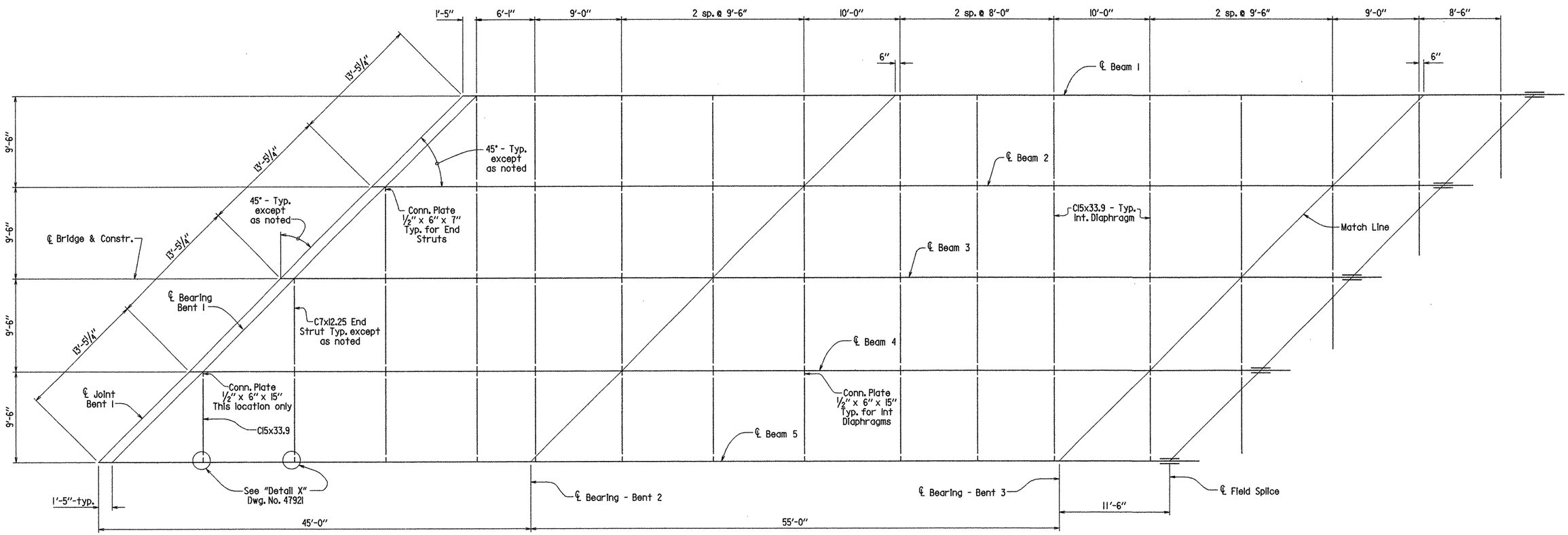

FRAMING PLAN

Scale: 3/16" = 1'-0"

STATE OF ARKANSAS
REGISTERED PROFESSIONAL ENGINEER
No. 4937
9/15/05
CHARLES P. BRAND

BRIDGE ENGINEER

SHEET 2 OF 8
DETAILS OF 200' CONTINUOUS
COMPOSITE W-BEAM UNIT
SINCLAIR CREEK

ROUTE SEC.

ARKANSAS STATE HIGHWAY COMMISSION

LITTLE ROCK, ARK.

DRAWN BY: KDH DATE: 8-27-04 FILENAME: b004938xl_s2.dgn
CHECKED BY: KWY DATE: 9-15-05 SCALE: AS NOTED
DESIGNED BY: KWY DATE: 7-04

BRIDGE NO. 07057 DRAWING NO. 47922

DATE REVISED	DATE FILMED	DATE REVISED	DATE FILMED	FED. ROAD DIST. NO.	STATE	FED. AID PROJ. NO.	SHEET NO.	TOTAL SHEETS
				6	ARK.			
				JOB NO.		004938	93	247
				07057 -	200 FT. UNIT		- 47923	

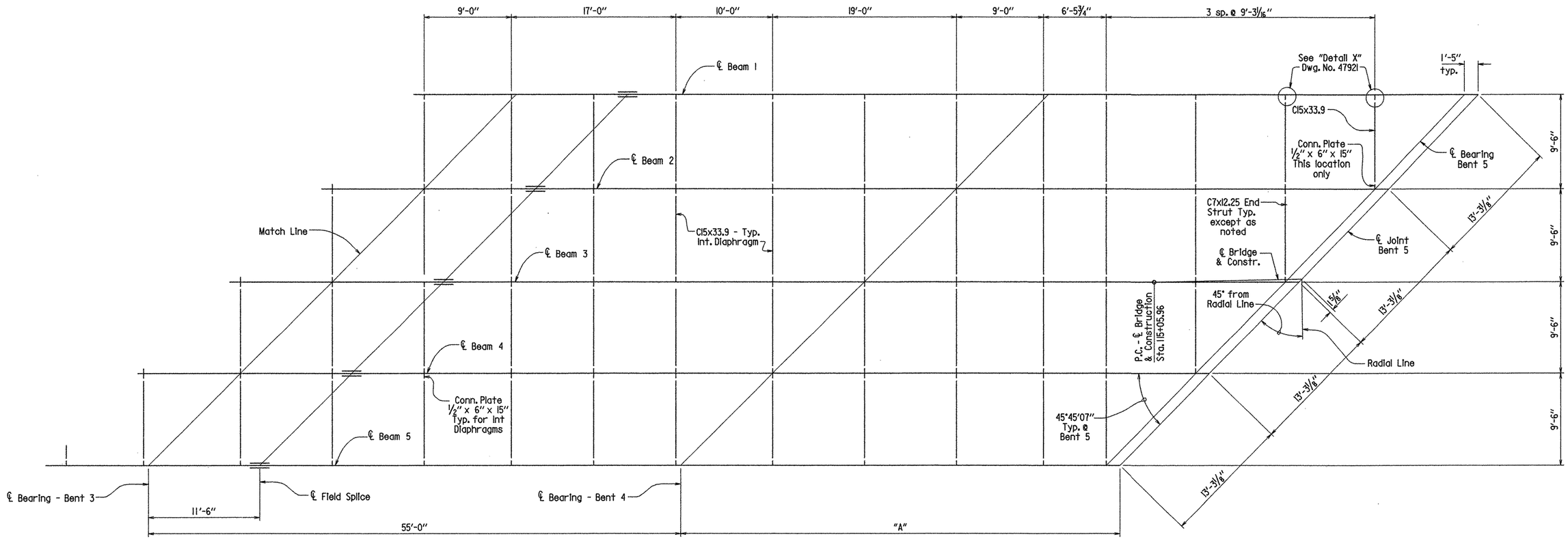

NOTE: Beams are straight, see Dwg. No. 47927.

FRAMING PLAN

Scale: 3/16" = 1'-0"

TABLE OF VARIABLES

	"A"
Beam 1	44'-4 15/16"
Beam 2	44'-7 7/8"
Beam 3	44'-10 9/16"
Beam 4	45'-1 13/16"
Beam 5	45'-4 3/4"

STATE OF ARKANSAS
Charles P. Brand
REGISTERED PROFESSIONAL ENGINEER
No. 4337
9/15/05
CHARLES P. BRAND

BRIDGE ENGINEER

SHEET 3 OF 8
DETAILS OF 200' CONTINUOUS
COMPOSITE W-BEAM UNIT
SINCLAIR CREEK

ROUTE SEC.

ARKANSAS STATE HIGHWAY COMMISSION

LITTLE ROCK, ARK.

DRAWN BY: KDH DATE: 8-27-04 FILENAME: b004938xl_s3.dgn
CHECKED BY: KWY DATE: 9-15-05 SCALE: AS NOTED
DESIGNED BY: KWY DATE: 7-04

BRIDGE NO. 07057 DRAWING NO. 47923

DATE REVISED	DATE FILMED	DATE REVISED	DATE FILMED	FED. ROAD DIST. NO.	STATE	FED. AID PROJ. NO.	SHEET NO.	TOTAL SHEETS
				6	ARK.			
				JOB NO.		004938	94	247
				(1) 07057 -		200 FT. UNIT	- 47924	

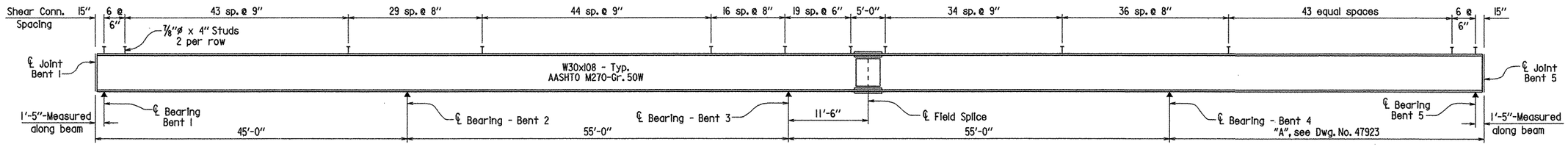

BEAM ELEVATION

Scale: 1/8" = 1'-0"

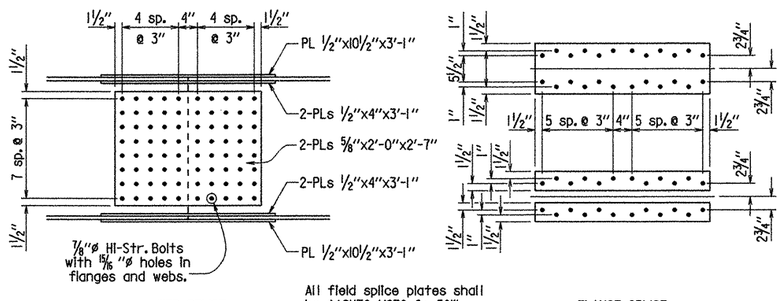

All field splice plates shall be AASHTO M270, Gr. 50W.

FIELD SPLICE DETAILS

Scale: 3/4" = 1'-0"

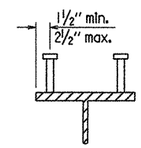

Stud Shear Connectors shown shall be 7/8"ø x 4" long, granular flux filled, solid fluxed or equal, and automatically end welded to the beam flange in accordance with the recommendations of the Manufacturer. 3/4"ø studs may be used in place of the 7/8"ø studs shown, at the ratio of 1.361 - 3/4"ø studs in place of one 7/8"ø stud. 7/8"ø studs will be used as basis for measurement of structural steel in shear connectors. Maximum stud spacing = 24".

SHEAR CONNECTOR DETAIL

No Scale

TABLE FOR WELD

Material Thickness of Thicker Part Joined (Inches)	Minimum Size of Fillet Weld (Inches)	Single Pass Weld Must Be Used
To 3/4" Inclusive	1/4"	
Over 3/4"	5/16"	

NOTE: When a fillet weld size, as shown on the plans, is larger than the minimum, the first pass shall be that specified for minimum size of fillet weld.

TABLE OF DEAD LOAD DEFLECTIONS (INCHES)

Span	Point of Deflection	Structural Steel		Structural Steel + Slab		Structural Steel + Slab + Parapet	
		Interior	Exterior	Interior	Exterior	Interior	Exterior
1	0	0	0	0	0	0	0
	0.1	0.013	0.012	0.107	0.085	0.113	0.092
	0.2	0.023	0.022	0.197	0.156	0.209	0.168
	0.3	0.031	0.028	0.259	0.205	0.274	0.221
	0.4	0.034	0.031	0.284	0.225	0.301	0.243
	0.5	0.033	0.030	0.273	0.216	0.289	0.233
	0.6	0.027	0.025	0.229	0.181	0.242	0.195
	0.7	0.019	0.018	0.162	0.128	0.171	0.138
	0.8	0.010	0.010	0.086	0.068	0.091	0.073
	0.9	0.003	0.003	0.024	0.019	0.025	0.020
2	0	0	0	0	0	0	0
	0.1	0.006	0.005	0.052	0.041	0.055	0.044
	0.2	0.017	0.016	0.154	0.122	0.163	0.131
	0.3	0.030	0.028	0.261	0.206	0.276	0.222
	0.4	0.038	0.036	0.337	0.267	0.356	0.287
	0.5	0.042	0.039	0.363	0.288	0.384	0.310
	0.6	0.038	0.036	0.334	0.264	0.353	0.284
	0.7	0.029	0.027	0.255	0.202	0.269	0.217
	0.8	0.017	0.016	0.147	0.117	0.155	0.126
	0.9	0.005	0.005	0.047	0.037	0.049	0.040
	0	0	0	0	0	0	0

← ℄ Unit

Note: This table is symmetrical about ℄ Unit

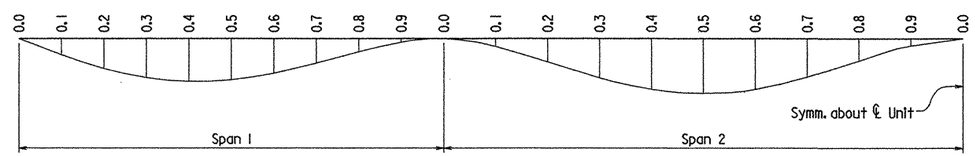

DEAD LOAD DEFLECTION DIAGRAM

NOTE:
Camber for Dead Load Deflection plus Vertical curve ± 1/4" tolerance.
Deflections shown are from a chord from ℄ Bearing to ℄ Bearing.
Vertical curve corrections not included. Negative sign (-) indicates point above chord.

STATE OF ARKANSAS
REGISTERED PROFESSIONAL ENGINEER
No. 4337
9/15/05
CHARLES P. BRAND

BRIDGE ENGINEER

SHEET 4 OF 8
DETAILS OF 200' CONTINUOUS
COMPOSITE W-BEAM UNIT
SINCLAIR CREEK

ROUTE SEC.

ARKANSAS STATE HIGHWAY COMMISSION

LITTLE ROCK, ARK.

DRAWN BY: KDH DATE: 8-27-04 FILENAME: b004938xl_sl4.dgn
CHECKED BY: KWY DATE: 9-15-05 SCALE: AS NOTED
DESIGNED BY: KWY DATE: 7-04

BRIDGE NO. 07057 DRAWING NO. 47924

DATE REVISED	DATE FILMED	DATE REVISED	DATE FILMED	FED. ROAD DIST. NO.	STATE	FED. AID PROJ. NO.	SHEET NO.	TOTAL SHEETS
				6	ARK.			
				JOB NO.		004938	95	247
				①	07057 -	200 FT. UNIT	- 47925	

NOTE: Pours with the same number may be placed simultaneously or separately. All Pours (1) must be placed before Pours (2) can be placed. 48 hours shall elapse between the end of a pour and the start of the next pour. 72 hours shall elapse between the end of a pour and the start of an adjacent pour. Any railing pours made before the entire slab unit has been placed must be approved by the Bridge Engineer. The contractor must obtain approval from the Bridge Engineer for any deviations from the pouring sequence.

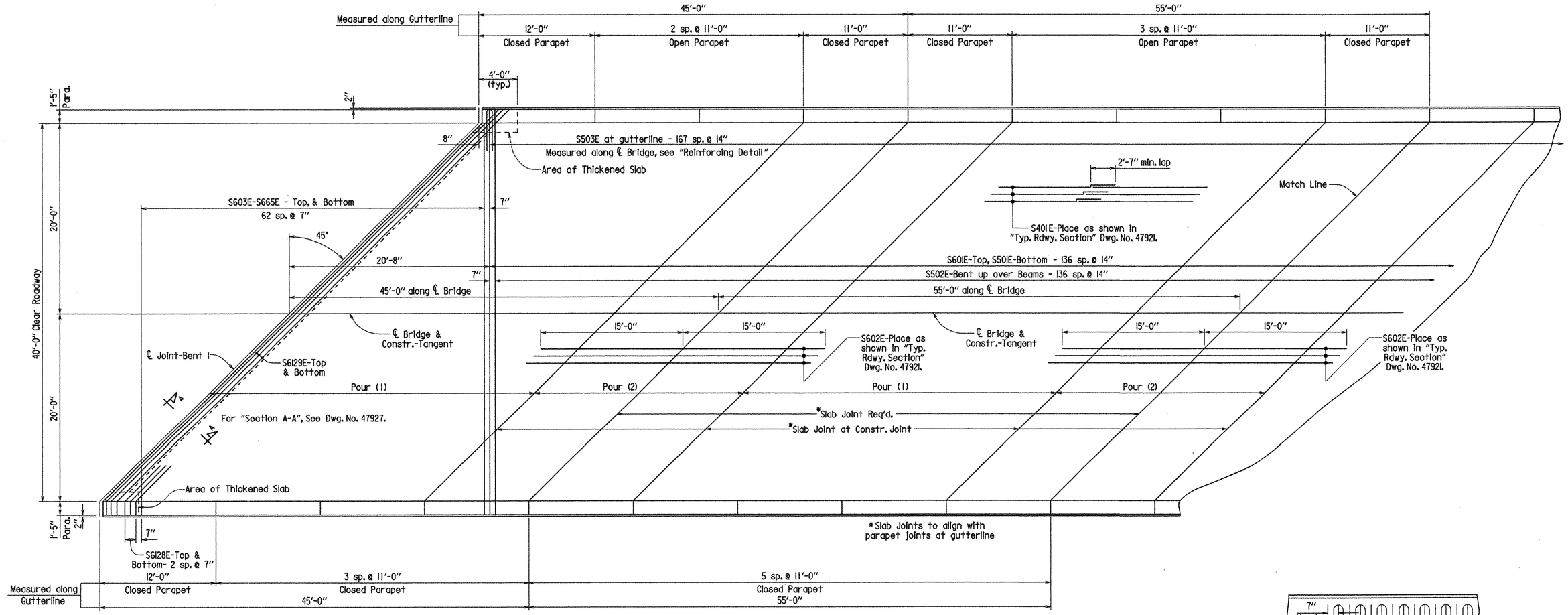

REINFORCING PLAN

Scale: 3/16" = 1'-0"

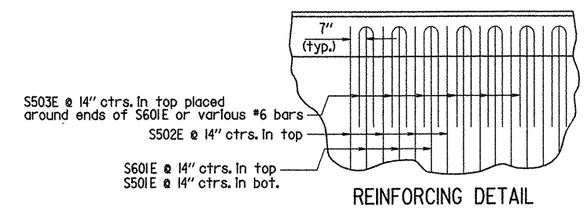

REINFORCING DETAIL

No Scale

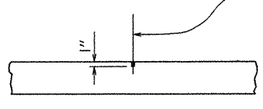

SLAB JOINT DETAIL

No Scale

1/2" x 1" Type 6 Joint Sealer. See Sections 501.02 (h) and 501.05 (j). Joint Sealer shall be measured and paid for as "Class S(AE) Concrete-Bridge". Slab joints shall extend to the outside edge of the deck slab. Slab joint shall be installed before the parpet rail is poured. If slab joints are to be sawed, they shall be sawed as soon as the concrete has sufficiently set so as sawing can be accomplished without damage to the slab and before any vehicular traffic is allowed on the unit. Slab joints shall be placed at all pouring sequence construction joints and required slab joint locations

STATE OF ARKANSAS REGISTERED PROFESSIONAL ENGINEER No. 4337 9/15/05 CHARLES P. BRAND

BRIDGE ENGINEER

SHEET 5 OF 8
DETAILS OF 200' CONTINUOUS
COMPOSITE W-BEAM UNIT
SINCLAIR CREEK

ROUTE SEC.

ARKANSAS STATE HIGHWAY COMMISSION

LITTLE ROCK, ARK.

DRAWN BY: KDH DATE: 9-8-04 FILENAME: b004938xl_s5.dgn
CHECKED BY: KWY DATE: 9-15-05 SCALE: AS NOTED
DESIGNED BY: KWY DATE: 7-04

BRIDGE NO. 07057 DRAWING NO. 47925

DATE REVISED	DATE FILMED	DATE REVISED	DATE FILMED	FED. ROAD DIST. NO.	STATE	FED. AID PROJ. NO.	SHEET NO.	TOTAL SHEETS
				6	ARK.			
				JOB NO.		004938	96	247
				(1) 07057 -		200 FT. UNIT	- 47926	

NOTE: Pours with the same number may be placed simultaneously or separately. All Pours (1) must be placed before Pours (2) can be placed. 48 hours shall elapse between the end of a pour and the start of the next pour. 72 hours shall elapse between the end of a pour and the start of an adjacent pour. Any rolling pours made before the entire slab unit has been placed must be approved by the Bridge Engineer. The contractor must obtain approval from the Bridge Engineer for any deviations from the pouring sequence.

Concrete in bridge superstructure shall be placed and consolidated for the entire pour before any concrete has taken its initial set. This may require the use of a retarding agent. The contractor must obtain approval from the Bridge Engineer for any deviations from the pouring sequence shown.

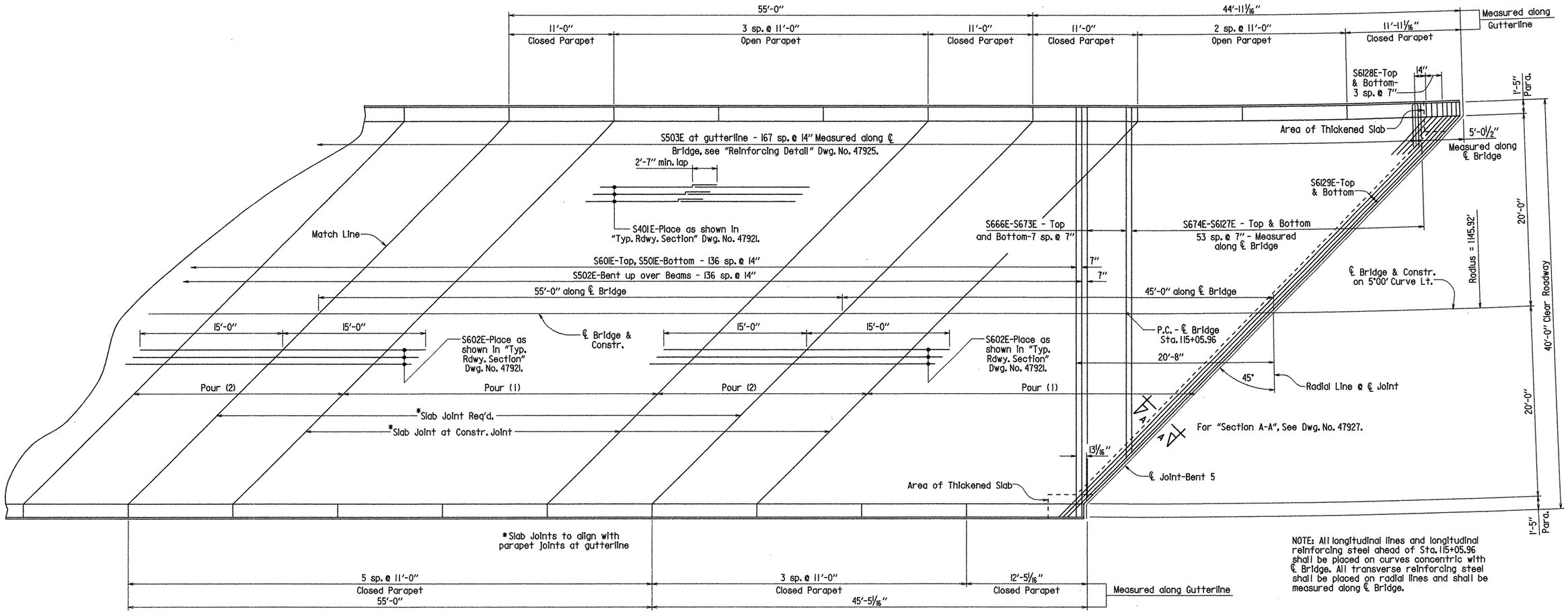

NOTE: All longitudinal lines and longitudinal reinforcing steel ahead of Sta. 115+05.96 shall be placed on curves concentric with ℄ Bridge. All transverse reinforcing steel shall be placed on radial lines and shall be measured along ℄ Bridge.

REINFORCING PLAN

Scale: 3/16" = 1'-0"

STATE OF ARKANSAS REGISTERED PROFESSIONAL ENGINEER No. 4337 9/15/05 CHARLES P. BRAND

BRIDGE ENGINEER

SHEET 6 OF 8
DETAILS OF 200' CONTINUOUS
COMPOSITE W-BEAM UNIT
SINCLAIR CREEK

ROUTE SEC.

ARKANSAS STATE HIGHWAY COMMISSION

LITTLE ROCK, ARK.

DRAWN BY: KDH DATE: 9-8-04 FILENAME: b004938xl_s6.dgn
CHECKED BY: KWY DATE: 9-15-05 SCALE: AS NOTED
DESIGNED BY: KWY DATE: 7-04

BRIDGE NO. 07057 DRAWING NO. 47926

DATE REVISED	DATE FILMED	DATE REVISED	DATE FILMED	FED. ROAD DIST. NO.	STATE	FED. AID PROJ. NO.	SHEET NO.	TOTAL SHEETS
				6	ARK.			
				JOB NO.		004938	97	247
				(1) 07057 -		200 FT. UNIT	- 47927	

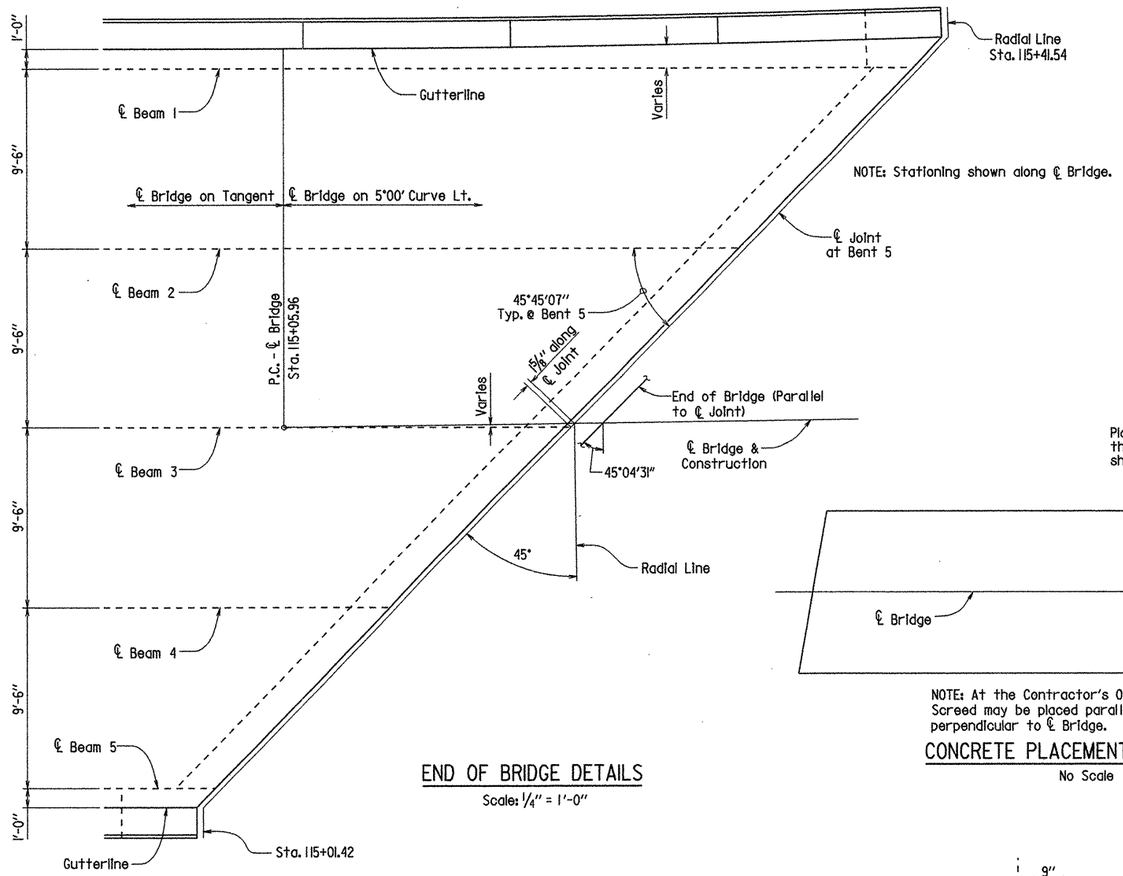

END OF BRIDGE DETAILS

Scale: ¼" = 1'-0"

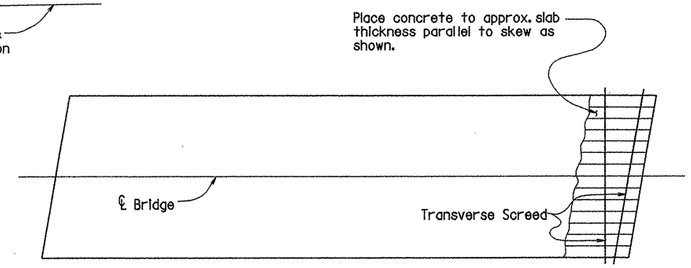

NOTE: At the Contractor's Option, the Transverse Screed may be placed parallel to the skew or perpendicular to ℄ Bridge.

CONCRETE PLACEMENT PROCEDURE

No Scale

BAR LIST

MARK	NO. REQ'D.	LENGTH	P.D.
S401E	630	35'-7"	Str.
S402E	72	4'-1"	2"
P401E	391	6'-4"	2"
P402E	391	5'-8"	2"
P403E	60	5'-10"	2"
P404E	60	3'-2"	2"
P405E	150	10'-6"	Str.
P406E	10	11'-6"	Str.
P407E	5	11'-5"	Str.
P408E	5	11'-11"	Str.
S501E	137	42'-10"	Str.
S502E	137	43'-9"	3"
S503E	168	9'-8"	7"
S601E	137	42'-10"	Str.
S602E	138	30'-0"	Str.
S603E-S665E	2 each	Var. 5'-0" to 41'-2"	Str.
S666E-S673E	2 each	Var. 36'-10" to 41'-0"	Str.
S674E-S6127E	2 each	Var. 5'-4" to 36'-3"	Str.
S6128E	14	6'-7"	4½"
S6129E	12	59'-9"	4½"
S6130E	24	12'-11"	Str.
P601E	50	10'-6"	Str.

BENDING DIAGRAMS

Dimensions are out to out of bars.

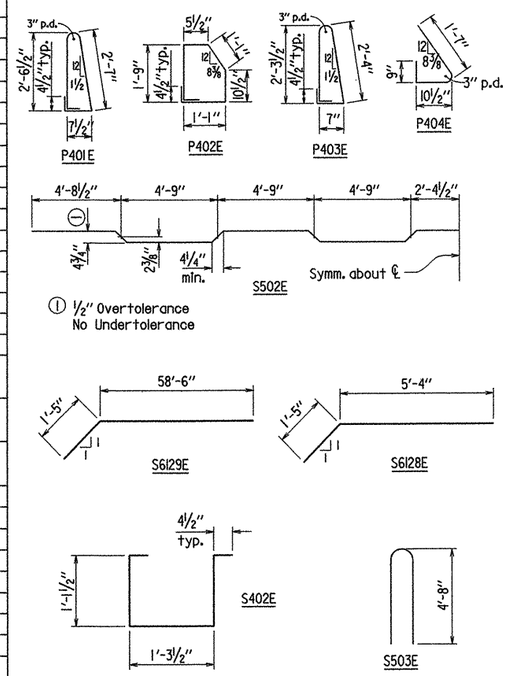

Bars designated with an "E" suffix are epoxy coated.

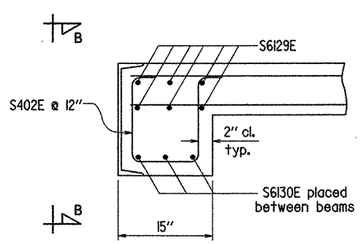

SECTION A-A

Scale: 1" = 1'-0"

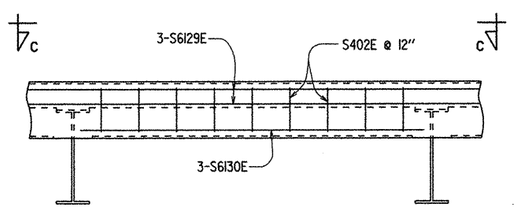

VIEW B-B

Scale: ½" = 1'-0"

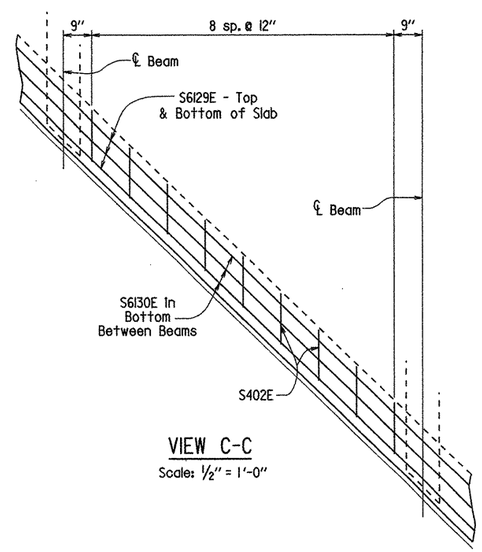

VIEW C-C

Scale: ½" = 1'-0"

STATE OF ARKANSAS
No. 4337
9/15/05
REGISTERED PROFESSIONAL ENGINEER
CHARLES P. BRAND

BRIDGE ENGINEER

SHEET 7 OF 8
DETAILS OF 200' CONTINUOUS
COMPOSITE W-BEAM UNIT
SINCLAIR CREEK

ROUTE SEC.

ARKANSAS STATE HIGHWAY COMMISSION

LITTLE ROCK, ARK.

DRAWN BY: KDH DATE: 9-9-04 FILENAME: b004938xl_s7.dgn
CHECKED BY: KWY DATE: 9-15-05 SCALE: AS NOTED
DESIGNED BY: KWY DATE: 7-04

BRIDGE NO. 07057 DRAWING NO. 47927

DATE REVISED	DATE FILMED	DATE REVISED	DATE FILMED	FED. ROAD DIST. NO.	STATE	FED. AID PROJ. NO.	SHEET NO.	TOTAL SHEETS
				6	ARK.			
				JOB NO.		004938	98	247
				1	07057 - 200 FT. UNIT - 47928			

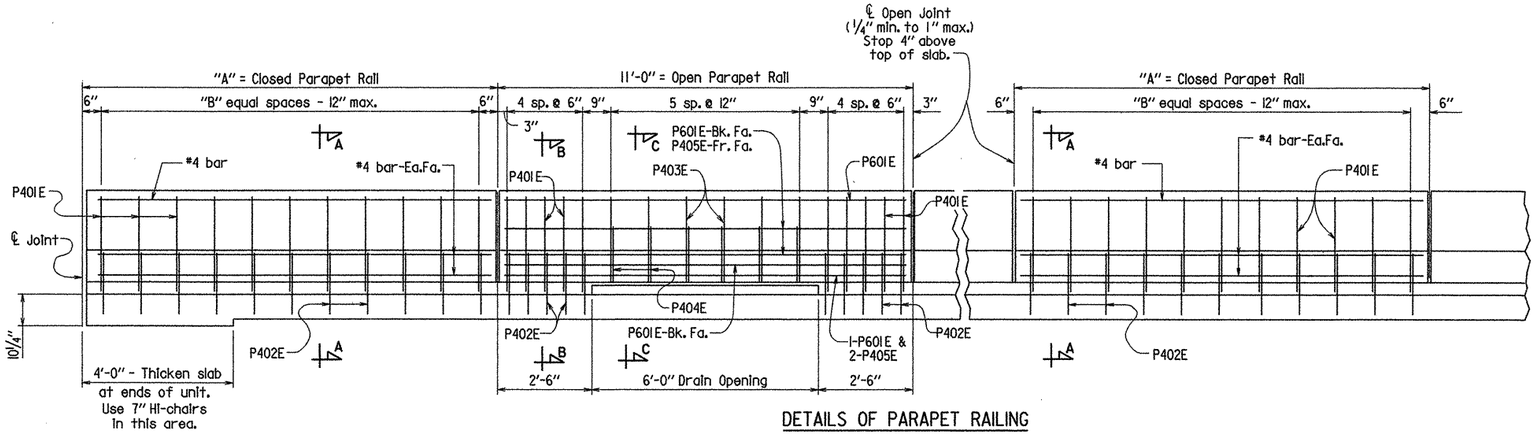

DETAILS OF PARAPET RAILING

Scale : 1/2" = 1'-0"

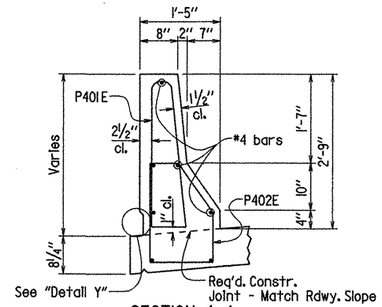

SECTION A-A

Low Side
Scale : 3/4" = 1'-0"

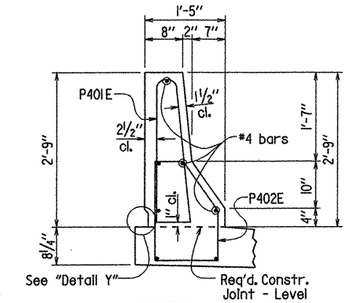

SECTION A-A

High Side
Scale : 3/4" = 1'-0"

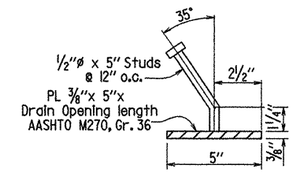

DETAIL Z

No Scale

NOTE:
Parapet studs shall be 5" long, granular flux filled, solid fluxed, or equal and automatically end welded to the plate. Studs and plate shall meet the requirements of Section 807. Studs and plates shall be measured and paid for as Structural Steel in Beam Spans (M270,GR. 50W).

The surfaces of the 3/8" plates which will not be in contact with concrete shall be painted in accordance with Section 638, or as approved by the Engineer. Only one coat is required and shall be applied in the fabricator's shop. Painting will not be paid for directly, but will be considered subsidiary to Structural Steel in Beam Spans (M270,GR.50W).

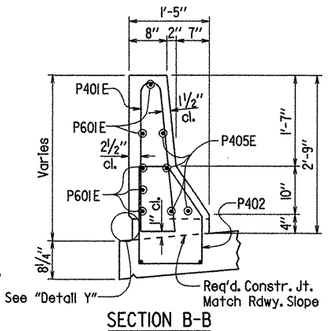

SECTION B-B

Scale : 3/4" = 1'-0"

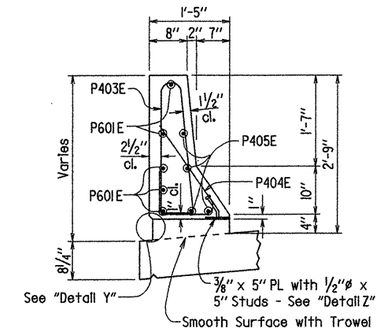

SECTION C-C

Scale : 3/4" = 1'-0"

GENERAL NOTES

All concrete shall be Class S(AE) with a minimum 28 day compressive strength, f'c = 4,000 psi., and shall be poured in the dry. All exposed corners to be chamfered 3/4" unless otherwise noted.

All concrete shall be poured and screeded off prior to initial set. The concrete deck shall be finished in accordance with Section 802.19, Class 5 of the Standard Specifications. Movement of the finishing machine across new concrete shall be on planks placed on the surface and shall be prohibited for 72 hours after finishing the pour. Sufficient concrete must be placed ahead of the strike-off to fully load the beam. A longitudinal strike-off will not be permitted.

Concrete in bridge superstructure shall be placed and consolidated for the entire pour before any concrete has taken its initial set. This may require the use of a retarding agent. Reinforcing steel shall conform to AASHTO M31 or M53, Grade 60. The reinforcing is to be accurately located in the forms and firmly held in place by steel wire supports, sufficient in number and size to prevent displacement during the course of construction. The wire supports will not be paid for directly but will be considered subsidiary to the item "Epoxy Coated Reinforcing Steel-Bridge (Gr. 60)".

All stud shear connectors shall be granular flux filled, solid fluxed, or equal, and shall be automatically end welded in accordance with recommendations of the manufacturer.

Field connections shall be bolted with 3/4" high strength bolts unless otherwise noted. Bolt holes shall be 13/16"ø except that 15/16"ø holes may be used for connection of expansion devices, diaphragms and end struts if a washer is used under both the nut and head of the bolt.

Diaphragms shall be installed as beams are erected and shall be completely bolted prior to pouring of the concrete deck. All bolts in diaphragms shall be installed and tightened in accordance with Subsection 807.71 prior to the pouring of the concrete deck.

Drawings show general features of design only. Shop drawings shall be made in accordance with the specifications, submitted and approval secured before any fabrication is begun. Structural shapes of equal or greater strength may be substituted for shapes shown if approval is obtained from the Bridge Engineer. Payment will be made on the basis of shapes shown.

All Structural Steel shall be AASHTO M270, Gr. 50W unless otherwise noted and shall be paid for at the unit price per pound bid for "Structural Steel in Beam Spans (M270, Gr. 50W)". M270, Gr. 50W steel shall not be painted. All structural steel shall be cleaned in accordance with Subsection 807.84 unless otherwise noted. Structural steel completely embedded in concrete may be AASHTO M270, Gr. 36. See Dwg. No. 47930 for cleaning requirements of external load plates on elastomeric bearings.

All beams shall be blocked in their true position in the shop. The camber, length of sections, distance between bearings and openings of joints shall be measured with the beams in this position and this information shall become a part of the permanent record of the job. The component parts shall be match marked in this assembly and these marks shall be shown on the erection diagram. All beam dimensions are based on a temperature of 60°F. A tolerance of ±1/4" is allowed for camber.

Beams and splice plates are considered main load carrying members and shall meet the longitudinal Charpy V-Notch test specified in Section 807.05. All welding shall conform to Subsection 807.26. Welded connections shall be 5/16" fillet shop welds unless otherwise noted. All welding that is to be done during fabrication of structural steel, including temporary welds, shall be detailed on the shop drawings and submitted for approval. If the Contractor or Erector should want to make additional welds, whether temporary or permanent, he shall submit detailed drawings with formal request to the Bridge Engineer for approval.

Bearings shall be seated in accordance with Section 807.66. This work and material will not be paid for directly but will be considered subsidiary to the item "Structural Steel in Beam Spans (M270, Gr. 50W)".

MATERIALS AND STRENGTHS:

Class S(AE) Concrete	f'c = 4,000 psi.
Reinforcing Steel (AASHTO M31 or M53, Gr. 60)	fy = 60,000 psi.
Structural Steel (AASHTO M270, Gr. 50W)	Fy = 50,000 psi.
Structural Steel (AASHTO M270, Gr. 36)	Fy = 36,000 psi.

Load Distribution

Dead Load:	Interior Beam	Exterior Beam
To Beam:	980 plf + 1.3 (Wt. of Beam)	756 plf + 1.3 (Wt. of Beam)
To Composite Beam:	* 348 plf	* 348 plf

* Includes 192 plf future wearing surface.

Live Load:		
To Composite Beam:	1.727 Wheels + Impact	1.490 Wheels + Impact

TABLE OF VARIABLES
CLOSED PARAPET RAILING

"A"-PANEL LENGTH	"B"	#4 BAR DESIGNATION
12'-0"	11	P406E
11'-0"	10	P405E
11'-11 15/16"	11	P407E
12'-5 15/16"	12	P408E

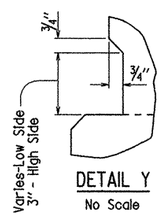

DETAIL Y

No Scale

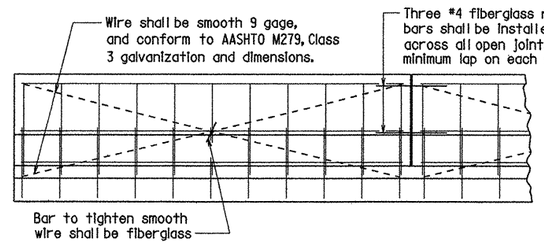

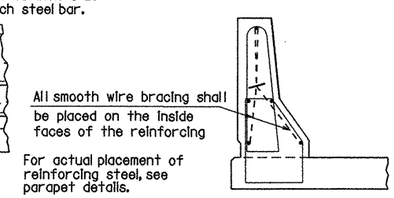

All panels shall be braced as shown to prevent racking. All open joints shall be sawed as soon as practical to a minimum width of 1/4". To control cracking before sawing all joints must be grooved before the concrete is set. Sawing of the joints must be controlled so it will follow the grooved joint.

The extruded parapet shall conform to the horizontal and vertical lines shown on the plans or as directed by the Engineer and shall present a smooth, uniform appearance and texture. Exposed surfaces may be given a light brush finish or a Class 3, Sprayed Finish, in place of Class 2, Rubbed Finish.

DETAILS OF OPTIONAL SLIPFORMING OF CONCRETE PARAPET RAIL

No Scale

NAME PLATE DETAIL

No Scale

STATE OF ARKANSAS
REGISTERED PROFESSIONAL ENGINEER
No. 4337
9/15/05
CHARLES B. BRAND

BRIDGE ENGINEER

SHEET 8 OF 8
DETAILS OF 200' CONTINUOUS COMPOSITE W-BEAM UNIT
SINCLAIR CREEK

ROUTE SEC.

ARKANSAS STATE HIGHWAY COMMISSION

LITTLE ROCK, ARK.

DRAWN BY: KDH DATE: 09-13-04 FILENAME: b004938xl_s8.dgn
CHECKED BY: KWY DATE: 9-15-05 SCALE: AS NOTED
DESIGNED BY: KWY DATE: 7-04

BRIDGE NO. 07057 DRAWING NO. 47928

DATE REVISED	DATE FILMED	DATE REVISED	DATE FILMED	FED. ROAD DIST. NO.	STATE	FED. AID PROJ. NO.	SHEET NO.	TOTAL SHEETS
				6	ARK.			
				JOB NO.		004938	99	247

(1) 07057 - JOINTS-SINCLAIR - 47929

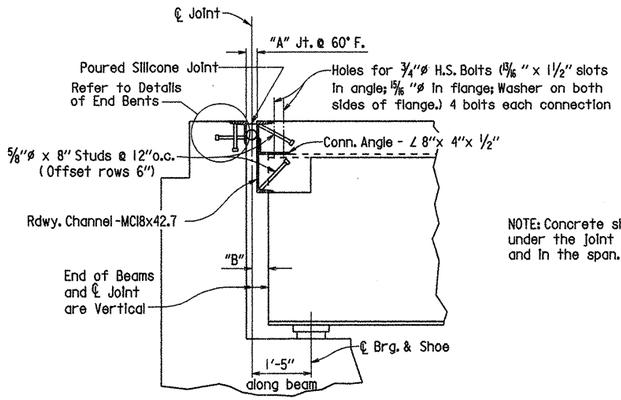

NOTE: Concrete shall be hand packed under the joint armor in the backwall and in the span.

SECTION THRU JOINT AT BENTS 1 & 5

No Scale

SILICONE JOINT DATA

Bent Number	"A" Width Perpendicular to Joint at 24 Hour Average Temperature (1) Of:			"B" Perpendicular to Joint at 60°F	Bumper Plate Size	"D"
	40°F	60°F	80°F			
1 & 5	1 5/8"	1 1/2"	1 3/8"	2" ±	1" x 3/8"	4"

(1) The temperature used to set the joint opening shall be the approximate average air temperature during the 24 hour period immediately before the bolts are tightened. The Engineer shall establish the temperature. Interpolation of the table may be necessary.

Notes: The temperature limitations recommended by the sealant manufacturer shall be observed.

The sealant shall be installed only when the average 24 hour air temperature is between 40° and 80°F.

(2) BACKER ROD NOTE:

Use an appropriately sized backer rod at the depth shown in the manufacturer's literature based on the joint width at the time of sealing.

Except as noted, do not install more backer rod that can be sealed in the same day.

The contractor shall verify separation of the backer rod from the joint material after the joint material has set.

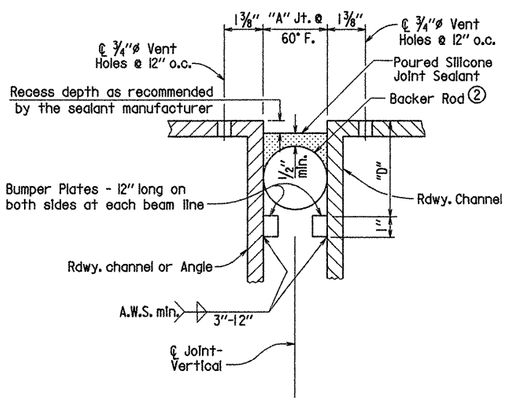

DETAIL OF POURED SILICONE JOINT SEAL

No Scale

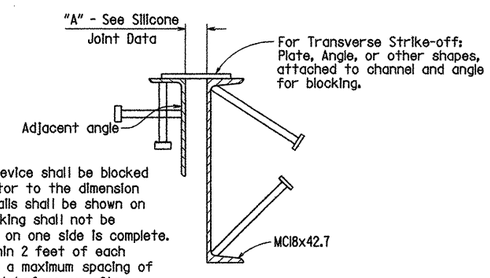

NOTE: Each expansion joint device shall be blocked in the Shop by the Fabricator to the dimension shown, and the blocking details shall be shown on the Shop Drawings. The blocking shall not be removed until the concrete on one side is complete. Blocking shall be placed within 2 feet of each end of the device and with a maximum spacing of 8 feet. Removal shall be just before or after pouring the second side of the joint, as directed by the Engineer.

DETAILS FOR BLOCKING EXPANSION JOINT DEVICE

Scale: 1 1/2" = 1'-0"

EXPANSION DEVICE INSTALLATION AT END BENTS:

The Contractor may elect to install the expansion device using one of the following two alternatives.

1) The concrete span pour adjacent to joint shall be placed before the end bent backwall is placed. After the end bent backwall forms are in place and the beams erected, the blocked expansion device shall be installed and adjusted for grade. All connection bolts shall be fully tightened prior to placing the deck concrete adjacent to the bent. Immediately prior to pouring the backwall concrete, the blocking shall be removed, the opening adjusted for temperature, and the backwall constructed.

2) The backwall shall be poured to the optional construction joint after beams are erected. The blocked expansion device shall be installed and adjusted for grade. All connection bolts shall be fully tightened prior to placing the deck concrete adjacent to the bent. Immediately prior to pouring the remainder of the backwall concrete, the blocking shall be removed and the opening adjusted for temperature.

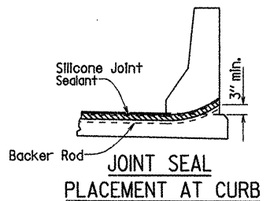

JOINT SEAL PLACEMENT AT CURB

No Scale

STATE OF ARKANSAS
REGISTERED PROFESSIONAL ENGINEER
No. 4337
7/16/08
CHARLES P. BRAND

BRIDGE ENGINEER

DETAILS OF JOINTS SINCLAIR CREEK

ROUTE SEC.

ARKANSAS STATE HIGHWAY COMMISSION

LITTLE ROCK, ARK.

DRAWN BY: KDH DATE: 10-29-04 FILENAME: b004938xl_jl.dgn
CHECKED BY: KWY DATE: 7-16-08 SCALE: AS NOTED
DESIGNED BY: KWY DATE: 7-04

BRIDGE NO. 07057 DRAWING NO. 47929

DATE REVISED	DATE FILMED	DATE REVISED	DATE FILMED	FED. ROAD DIST. NO.	STATE	FED. AID PROJ. NO.	SHEET NO.	TOTAL SHEETS
				6	ARK.			
				JOB NO.		004938	100	247
				①	07057 - BEARINGS - 47930			

① Care shall be taken to ensure that the external load plate is in full and complete contact with the beam or girder flange before welding begins.

② ℄ Elastomeric Bearing shall be aligned with ℄ Beam.

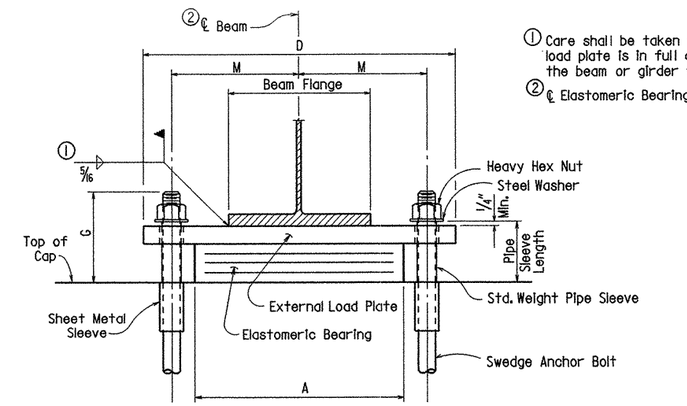

FRONT "B" VIEW

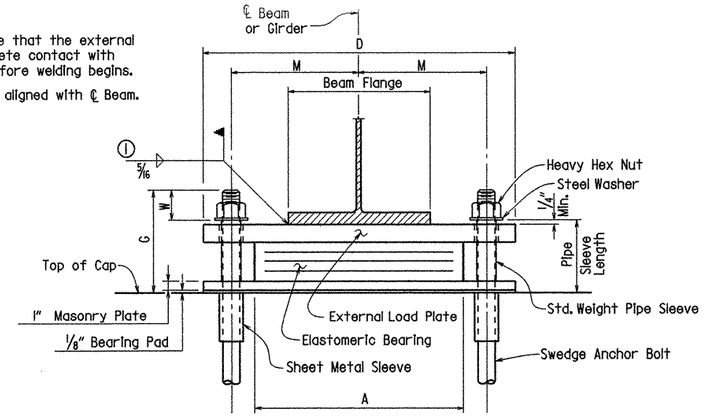

FRONT "A" VIEW

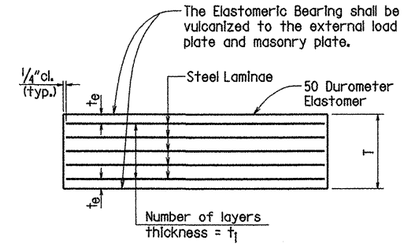

t_e = thickness of elastomer cover on top and bottom of pad

t_1 = thickness of elastomer between steel laminae

N = number of elastomer layers of thickness t_1

ELASTOMERIC BEARING

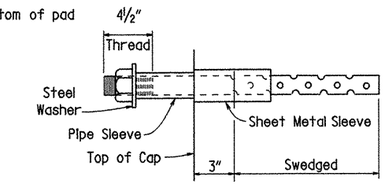

ANCHOR BOLT DETAIL

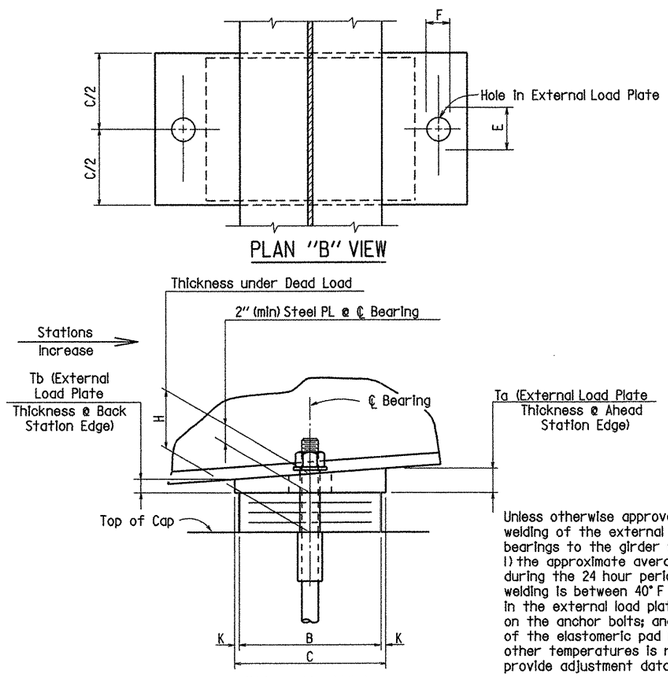

PLAN "B" VIEW

SIDE "B" VIEW

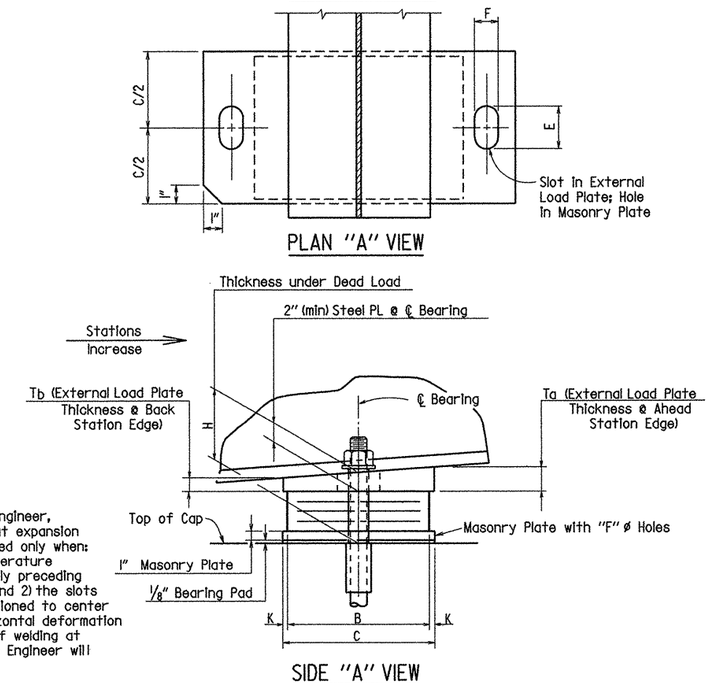

PLAN "A" VIEW

SIDE "A" VIEW

Unless otherwise approved by the Engineer, welding of the external load plate at expansion bearings to the girder will be allowed only when: 1) the approximate average air temperature during the 24 hour period immediately preceding welding is between 40° F and 80° F; and 2) the slots in the external load plate are positioned to center on the anchor bolts; and 3) no horizontal deformation of the elastomeric pad is evident. If welding at other temperatures is required, the Engineer will provide adjustment data.

Ta & Tb TABLE

Bent No.	Beam No.	T_a	T_b
1	1	1.988"	2.012"
1	2	2.012"	1.988"
1	3	2.024"	1.976"
1	4	2.036"	1.964"
1	5	2.048"	1.952"
2	1	1.988"	2.012"
2	2	2.012"	1.988"
2	3	2.024"	1.976"
2	4	2.048"	1.952"
2	5	2.060"	1.940"
3	1	1.988"	2.012"
3	2	2.012"	1.988"
3	3	2.024"	1.976"
3	4	2.048"	1.952"
3	5	2.072"	1.928"
4	1	1.988"	2.012"
4	2	2.012"	1.988"
4	3	2.024"	1.976"
4	4	2.048"	1.952"
4	5	2.060"	1.940"
5	1	1.972"	2.028"
5	2	2.000"	2.000"
5	3	2.016"	1.984"
5	4	2.043"	1.957"
5	5	2.047"	1.953"

NOTE: Anchor Bolts may be cast in place or drilled and grouted into place. If Anchor Bolts are to be cast in place, the Galvanized Sheet Metal Sleeves will not be required.
If Anchor Bolts are to be drilled and grouted in place, the Galvanized Sheet Metal Sleeves shall be cast in place as shown. Sleeves shall be dry packed with styrofoam, urethane foam or approved equal prior to pouring of concrete. After pouring of the cap and prior to erection of Structural Steel, the dry pack shall be removed and holes for the anchor bolts shall be accurately drilled into the masonry. Bolts placed in drilled holes shall be accurately set and fixed using a QPL approved epoxy or non-shrink grout that completely fills the holes. Galvanized Sheet Metal Sleeves will not be paid for directly, but will be considered subsidiary to the item "Structural Steel in Beam Spans, (M270, Gr. 50W)".

GENERAL NOTES

Elastomeric Bearings shall conform to Special Provision Job 004938 "Elastomeric Bearings" and Section 808 of the Standard Specifications and shall be paid for at the unit price bid for "Elastomeric Bearings." Long-duration testing of random lot samples specified in subsection 808.05 is not required.

External load plates and masonry plates shall conform to AASHTO M270, Grade 50W. Pipe sleeves shall be ASTM A53, Grade B, and shall be galvanized to conform to AASHTO M 232, Class C or AASHTO M 298, Class 50.

External load plates and masonry plates shall be completely fabricated (including bevel and bolt holes) and shall be cleaned before vulcanizing to the elastomeric bearing. The surface in contact with the elastomeric bearing shall be cleaned in accordance with subsection 808.03. Other surfaces shall be blast cleaned in accordance with subsection 807.84(e) for unpainted Grade 50W steel.

Anchor Bolts, Washers and Nuts shall conform to subsection 807.07. The anchor bolt grade of steel shall be as specified in the 'Table of Fabricator Variables". Indentations shall be circular with rounded bottoms and staggered as shown in the details.

Pipe Sleeves, Anchor Bolts, Washers and Nuts shall be paid for at the unit price bid for "Structural Steel in Beam Spans (M270, Gr. 50W)". External load plates, masonry plates and 1/8" bearing pads will not be measured or paid for separately but will be considered included in the unit bid price for "Elastomeric Bearings".

Bearings with masonry plates and 1/8" bearing pads shall be firmly seated in accordance with Subsection 807.66. This work and materials shall be considered subsidiary to the item "Elastomeric Bearings" and shall not be paid for directly.

TABLE OF FABRICATOR VARIABLES

BRIDGE NO.	LOCATION: BENT NO(S).	LOCATION: BEAM OR GIRDER NO.	BEARING	BEARING TYPE	NO. of BEARINGS EACH BENT	*MAXIMUM DESIGN LOAD (KIPS)	G	H	ELASTOMERIC PAD: A	B	N	t_1	t_e	NO. & THICKNESS OF STEEL LAMINAE	T	EXTERNAL LOAD PLATE: C	D	**E	F	K	M	T_a	T_b	ANCHOR BOLT: ANCHOR BOLT (ø x L)	GRADE	PIPE SLEEVE SIZE (ø x L)	SHEET METAL SLEEVE SIZE (ø x L)	STEEL WASHER SIZE (O.D.)
07057	1	All	A	Exp.	5	76.75	9 1/2"	6 11/16"	12"	11 1/2"	5	1/2"	1/4"	6 @ 12 Gauge	3 5/8"	12 1/2"	22"	3 1/2"	2 1/4"	1/2"	8 1/4"	***	***	1 1/2"ø x 27"	55	1 1/2"ø x 7"	3"ø x 7"	3"ø
	2 & 4	All	B	Fix	5	151.58	8 1/4"	5"	15"	14 1/2"	4	1/2"	1/4"	5 @ 12 Gauge	3"	15 1/2"	27"	3 1/8"	3 1/8"	1/2"	10 1/4"	***	***	2"ø x 30"	55	2 1/2"ø x 5 1/4"	4"ø x 7"	3 3/4"ø
	3	All	B	Fix	5	152.55	8 7/8"	5 9/16"	15"	15"	5	1/2"	1/4"	6 @ 12 Gauge	3 5/8"	16"	27"	3 1/8"	3 1/8"	1/2"	10 1/4"	***	***	2"ø x 31"	55	2 1/2"ø x 5 7/8"	4"ø x 7"	3 3/4"ø
	5	All	A	Exp.	5	76.75	9 1/2"	6 11/16"	12"	11 1/2"	5	1/2"	1/4"	6 @ 12 Gauge	3 5/8"	12 1/2"	22"	3 1/2"	2 1/4"	1/2"	8 1/4"	***	***	1 1/2"ø x 27"	55	1 1/2"ø x 7"	3"ø x 7"	3"ø

* Maximum Design Load = Service Load

** The dimension "E" does not apply to masonry plates - See "SIDE "A" VIEW"

*** See T_a & T_b table.

Tabular Data by : KDH Date: 10-29-04

Checked by : KWY Date: 9-15-05

Designed by : KWY Date: 7-04

STATE OF ARKANSAS
REGISTERED PROFESSIONAL ENGINEER
No. 4337
9/16/05
CHARLES P. BRAND

BRIDGE ENGINEER

DETAILS OF ELASTOMERIC BEARINGS WITH MASONRY PLATES SINCLAIR CREEK

ROUTE SEC.

ARKANSAS STATE HIGHWAY COMMISSION

LITTLE ROCK, ARK.

DRAWN BY: SAT DATE: 4-19-01 FILENAME: b004938xl_el.dgn

CHECKED BY: JAC DATE: 4-25-01 SCALE: NONE

DESIGNED BY: Std. DATE:

BRIDGE NO. 07057 DRAWING NO. 47930