| DATE REVISED | DATE FILMED | DATE REVISED | DATE FILMED | FED. ROAD DIST. NO. | STATE | FED. AID PROJ. NO. | SHEET NO. | TOTAL SHEETS |
|---|---|---|---|---|---|---|---|---|
| | | | | 6 | ARK. | | | |
| | | | | JOB NO. | | 60534 | 16 | 42 |
| | | | | (1) 6463 | | SPAN DTL'S. | 32837 | |

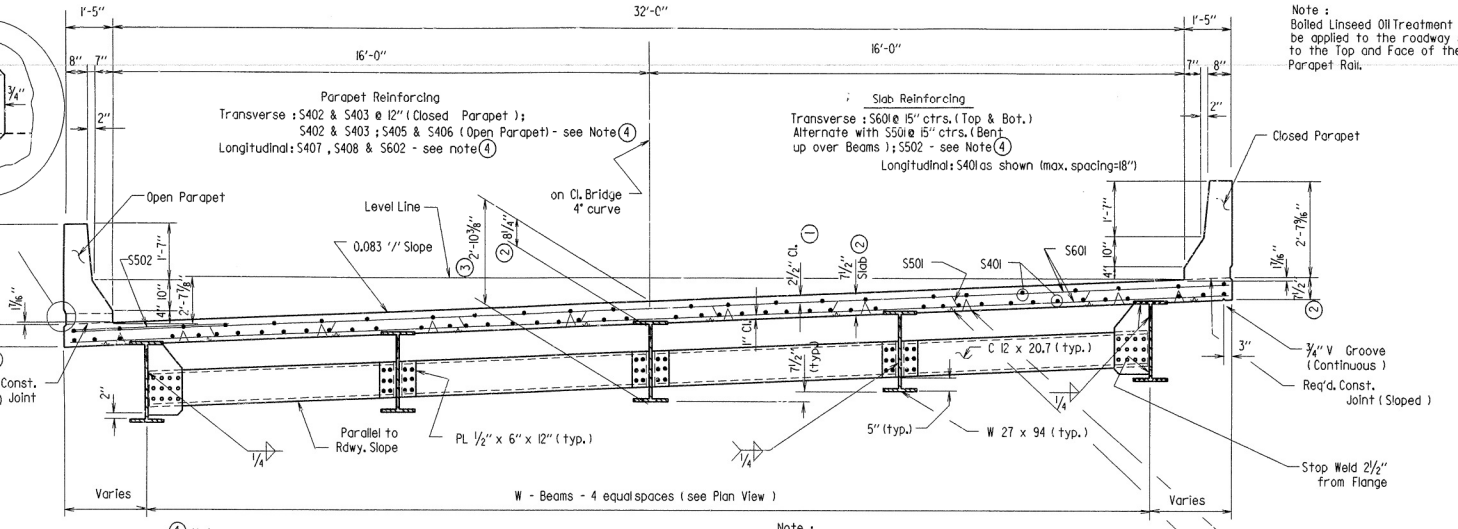


Note :
Boiled Linseed Oil Treatment shall be applied to the roadway surface and to the Top and Face of the Concrete Parapet Rail.

4 Note :
For placing of S402, S403, S405, S406, S407, S408, S502 & S602 - see Longitudinal Section At Curb For Open Parapet Rail, Sec. A-A, Sec. B-B, Closed Parapet Detail and Plan of 50'-0" Spans.

## ROADWAY SECTION

NOT TO SCALE

Note :
Holes for 3/4" ϕ Hi-Str. Bolts for Expansion Device, Diaphragms & End Struts may be 15/16 " ϕ holes if a washer is supplied for use under both the nut & the head of the bolt.

4 1/4" Hi- Chairs as shown trans. & at 4'-0" o.c. Long.

1" Slab Bolster as shown. trans. (typ.)

GENERAL NOTES

ALL STRUCTURAL STEEL SHALL BE ASTM DESIGNATION A588 UNLESS OTHERWISE NOTED AND SHALL BE PAID FOR AT THE UNIT PRICE PER POUND BID FOR "STRUCTURAL STEEL IN BEAM SPANS (A588). A588 STEEL SHALL NOT BE PAINTED. ALL EXPOSED SURFACES TO BE CLEANED IN ACCORDANCE WITH SUBSECTION 807.67(e) OF THE STANDARD SPECIFICATIONS. STRUCTURAL STEEL COMPLETELY EMBEDDED IN CONCRETE MAY BE ASTM A36.

BEAMS ARE CONSIDERED MAIN LOAD CARRYING MEMBERS AND SHALL MEET THE LONGITUDINAL CHARPY V-NOTCH TEST SPECIFIED IN SECTION 807.05

DESIGN SPECIFICATIONS: AASHTO 1989 WITH INTERIM SPECIFICATIONS.

LIVE LOADING: HS20 METHOD OF DESIGN: LOAD FACTOR

| DEAD LOAD: | INTERIOR BEAM | EXTERIOR BEAM |
|---|---|---|
| A. TO W-BEAM | 709 PLF + 1.3 (WT/FT OF W-BM) | 578 PLF + 1.3 (WT/FT OF W-BM) |
| B. TO COMPOSITE BEAM | | |
| OPEN PARAPETS | 295 PLF* | 295 PLF* |
| CLOSED PARAPETS | 309 PLF* | 309 PLF* |
| LIVE LOAD: TO EACH COMPOSITE BEAM | 1.364 WHEELS + IMPACT | 1.277 WHEELS + IMPACT |

* INCLUDES 154 PLF FUTURE WEARING SURFACE

MATERIAL STRENGTH:

| | |
|---|---|
| CLASS S(AE) CONCRETE (N=8) | F'C = 4000 P.S.I. |
| REINFORCING STEEL (A615 OR A617) | fy = 60,000 P.S.I. |
| STRUCTURAL STEEL (A36) | FY = 36,000 P.S.I. |
| STRUCTURAL STEEL (A588) | FY = 50,000 P.S.I. |

FOR ADDITIONAL DETAILS, SEE STD. DWG. NO. 14990H.

hus = 1/4"
unch Detail B on Dwg. No. 14990H
nch Detail B, Dwg. No. 14990H
ons are taken
ng & Cl. W-beam

At the Contractors option, in lieu of providing bar S501, one number 5 bar top & bottom may be substituted. Payment will be based on the weight of bar S501.

Expansion Device : Roadway C15 x 33.9 ; Conn. L's 6" x 3 1/2" x 3/8" x 0'-8"; Preformed Joint Sealer supported by Bumper Plate see dwg. no. 14990H Detail Device 1/8" high & provide 1/4" Shims using 2 -1/16" & 1-1/8" PL's 5/8" x 8" Studs @ 12" ctrs. (top & bot.)

W - Beams are to be placed on chords of concentric arcs spaced at 7'-6" along CL Joint. (typ.)

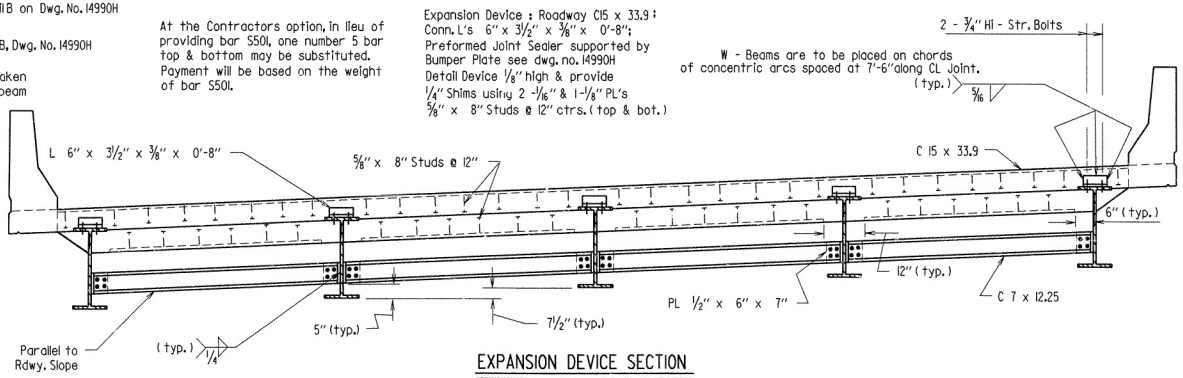


## EXPANSION DEVICE SECTION

NOT TO SCALE

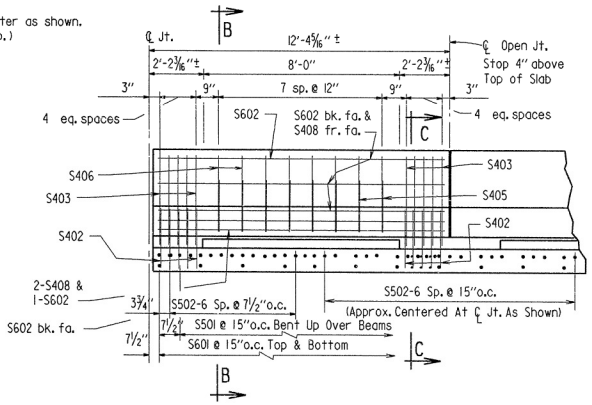


## LONGITUDINAL SECTION AT CURB FOR OPEN PARAPET RAIL

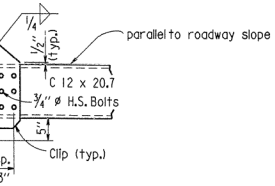


Diaphragm Connections shall be properly installed in accordance with Subsection 807.22 of Specifications.

M CONNECTIONS AT
ERIOR BEAMS

N.T.S.

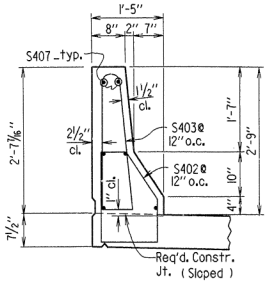


## CLOSED PARAPET DETAIL

SCALE : 3/4" = 1'-0"

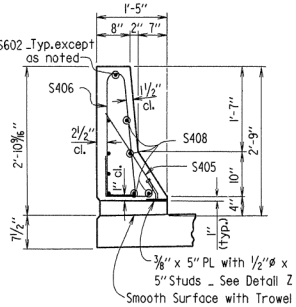


## SECTION A - A

SCALE : 3/4" = 1'-0"

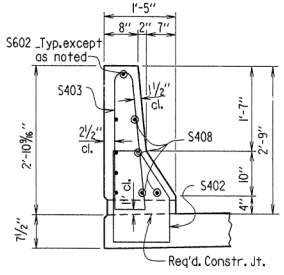


## SECTION B - B

SCALE : 3/4" = 1'-0"

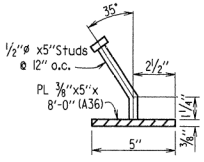


## DETAIL Z

N.T.S.

The surfaces of the 3/8" Plates which will not be in contact with concrete shall be painted in accordance with Section 638 or as approved by the Engineer except that only one prime coat is required where multiple coats are specified. All coats shall be applied in the fabricator's shop. Painting will not be paid for directly, but will be considered subsidiary to Structural Steel or Class S(AE) Concrete.

SHEET 1 OF 2
DETAILS OF
50'-0" COMPOSITE W-BEAM SPANS
BAYOU TWO PRAIRIE
LONOKE COUNTY
ROUTE 89 SEC. 1

ARKANSAS STATE HIGHWAY COMMISSION
LITTLE ROCK, ARK.

Neal Pinkerton
BRIDGE ENGINEER

DRAWN BY: EJK DATE: 2-13-92
CHECKED BY: J.G.T. DATE: 2-20-92
DESIGNED BY: ARW DATE: Feb-92
SCALE: 1/2" = 1'-0" OR AS NOTED

BRIDGE NO. 6463 DRAWING NO. 32837

EJK&553,060534.611,1,550,3001,60534

| DATE REVISED | DATE FILMED | DATE REVISED | DATE FILMED | FED. ROAD DIST. NO. | STATE | FED. AID PROJ. NO. |
|---|---|---|---|---|---|---|
| | | | | 6 | ARK. | |
| | | | | JOB NO. | | 60534 |
| | | | | 1 6463 | | LAYOUT |

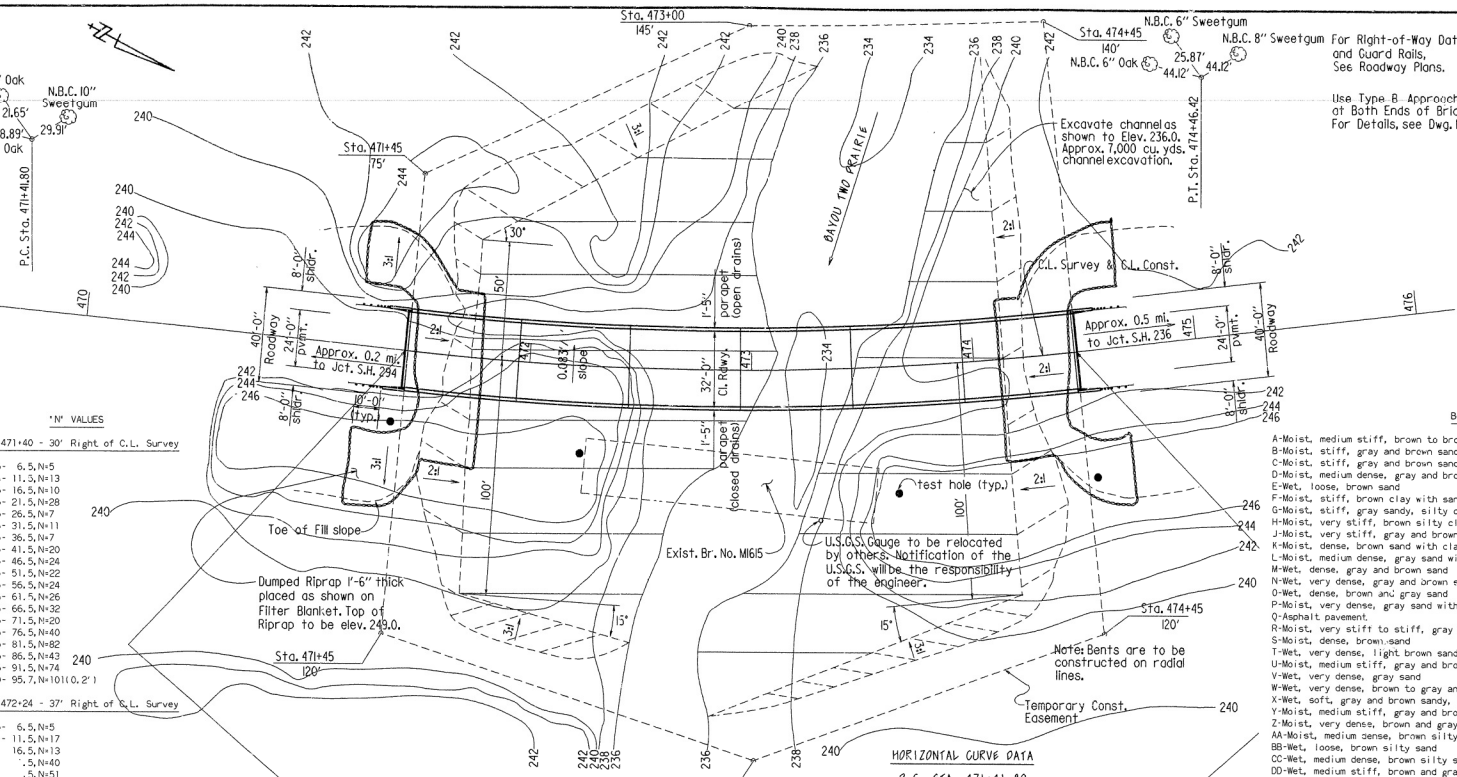


For Right-of-Way Data and Guard Rails, See Roadway Plans.

Use Type B Approach Gutters at Both Ends of Bridge. For Details, see Dwg. Nos. 2016B & 2017.

HORIZONTAL CURVE DATA

P.C. STA. 471+41.80
P.I. STA. 472+94.69
P.T. STA. 474+46.42
TANGENT LENGTH=152.89'
D=4°00'00"
Δ=12°11'05.16" Rt.

PLAN

'N' VALUES

471+40 - 30' Right of C.L. Survey

- 6.5, N=5
- 11.5, N=13
- 16.5, N=10
- 21.5, N=28
- 26.5, N=7
- 31.5, N=11
- 36.5, N=7
- 41.5, N=20
- 46.5, N=24
- 51.5, N=22
- 56.5, N=24
- 61.5, N=26
- 66.5, N=32
- 71.5, N=20
- 76.5, N=40
- 81.5, N=82
- 86.5, N=43
- 91.5, N=74
- 95.7, N=101(0.2')

472+24 - 37' Right of C.L. Survey

- 6.5, N=5
- 11.5, N=17
- 16.5, N=13
- .5, N=40
- .5, N=51
- 31.5, N=6
- 36.5, N=9
- 41.5, N=23
- 46.5, N=21
- 51.5, N=26
- 56.5, N=22
- 61.5, N=34
- 66.5, N=33
- 71.5, N=64
- 76.5, N=50
- 81.5, N=65

473+64 - 54' Right of C.L. Survey

- 6.5, N=2
- 11.5, N=6
- 16.5, N=58
- 21.5, N=24
- 26.5, N=7
- 31.5, N=17
- 36.5, N=6
- 41.5, 0, N=7(1.5')
- 46.5, N=19
- 51.5, N=17
- 56.5, N=16
- 61.5, N=29
- 66.5, N=24
- 71.5, N=76
- 76.5, N=15
- 81.5, N=45
- 85.8, N=95(0.3')
- 90.8, N=101(0.3')
- 95.9, N=60(0.4')
- 100.9, N=60(0.4')

474+50 - 54' Right of C.L. Survey

- 6.5, N=7
- 11.5, N=17
- 16.5, N=16
- 21.5, N=37
- 26.5, N=17
- 31.5, N=31
- 35.0, N=3(1.5')
- 41.5, N=8
- 46.5, N=21
- 51.5, N=16
- 56.5, N=17
- 66.5, N=32
- 66.5, N=25
- 71.5, N=33
- 76.5, N=29
- 81.5, N=31
- 85.9, N=97
- 90.9, N=60
- 95.9, N=105
- 100.9, N=60

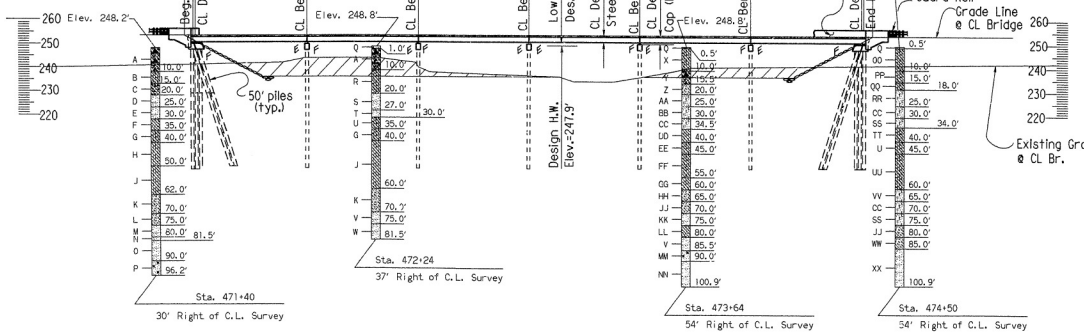


BENT NO. 1 2 3 4 5 6 7

ELEVATION

Boring Legend

A-Moist, medium stiff, brown to brown and gray sandy, silty clay with gravel
B-Moist, stiff, gray and brown sandy, silty clay
C-Moist, stiff, gray and brown sandy clay with gravel
D-Moist, medium dense, gray and brown sand
E-Wet, loose, brown sand
F-Moist, stiff, brown clay with sand seams
G-Moist, stiff, gray sandy, silty clay
H-Moist, very stiff, brown silty clay
J-Moist, very stiff, gray and brown silty clay
K-Moist, dense, brown sand with clay seams
L-Moist, medium dense, gray sand with clay seams
M-Wet, dense, gray and brown sand
N-Wet, very dense, gray and brown sand
O-Wet, dense, brown and gray sand
P-Moist, very dense, gray sand with lignite
Q-Asphalt pavement
R-Moist, very stiff to stiff, gray and brown sandy, silty clay
S-Moist, dense, brown sand
T-Wet, very dense, light brown sand
U-Moist, medium stiff, gray and brown sandy, silty clay
V-Wet, very dense, gray sand
W-Wet, very dense, brown to gray and brown sand
X-Wet, soft, gray and brown sandy, silty clay
Y-Moist, medium stiff, gray and brown sandy, silty clay with gravel
Z-Moist, very dense, brown and gray sand with clay seams
AA-Moist, medium dense, brown silty sand
BB-Wet, loose, brown silty sand
CC-Wet, medium dense, brown silty sand
DD-Wet, medium stiff, brown and gray silty clay
EE-Wet, medium stiff, gray sandy, silty clay
FF-Moist, very stiff, brown and gray to gray sandy, silty clay
GG-Moist, very stiff, brown and gray silty clay
HH-Moist, medium dense, gray and brown sand with clay seams
JJ-Wet, medium dense, brown sand with clay seams
KK-Wet, very dense, brown sand
LL-Wet, stiff, gray and brown clay with sand seams
MM-Wet, very dense, brown and gray sand with lignite
NN-Moist, very dense, gray sand
OO-Moist, medium stiff, brown sandy, silty clay
PP-Moist, very stiff, brown and gray sandy, silty clay
QQ-Moist, stiff, brown sandy, silty clay
RR-Moist, dense, brown silty sand
SS-Wet, dense, brown silty sand
TT-Wet, soft, gray sandy, silty clay
UU-Moist, very stiff, gray and brown sandy, silty clay
VV-Wet, dense, gray and brown silty sand
WW-Wet, dense, brown and gray sand with clay seams
XX-Moist, very dense, gray sand (Traces of lignite were encountered from 85.0' to 96.4')

GENERAL NOTES

BENCH MARK: Chiseled square in Southwest wingwall of Bridge, 26' Rt. of C Survey, Station 472+29, Elevation 249.42.

CONSTRUCTION SPECIFICATIONS: Arkansas State Highway and Transpo Department Standard Specifications for Highway Construction, 1991 ed with applicable supplemental specifications and special provisions.

DESIGN SPECIFICATIONS: AASHTO Standard Specifications for Highway Br 1989 with current interim specifications and Supplement A, Stand Specifications for Seismic Design of Highway Bridges.

LIVE LOADING: HS20 METHOD OF DESIGN: Load Factor
SEISMIC PERFORMANCE CATEGORY: A

MATERIALS AND STRENGTHS:
Class S(AE) Concrete (superstructure) f'c = 4,000 psi
Class S Concrete (substructure) f'c = 3,500 psi
Reinforcing Steel (A615 or A617, GR. 60) Fy = 60,000 psi
Structural Steel (A588) Fy = 50,000 psi
Structural Steel (A36) Fy = 36,000 psi

BORING LOGS: Boring logs may be obtained from the Programs and Division.

CONCRETE PILING: Piling for Bents 1 and 7 shall be 16" octagonal or 14" square precast concrete and shall be driven to a minimum sa capacity of 44 tons per pile. Piling shapes shall not be mixed. Piling Bents 2 through 6 shall be 18" square precast concrete and shall be dr a minimum safe bearing capacity of 65 tons per pile. All piling shall driven with an approved air, steam, or diesel hammer. Piling in end shall be driven after embankment to bottom of cap is in place. Pilin Bents 2 through 6 shall have a minimum penetration of 20' below ground. Lengths of piling shown are assumed for estimating quantitie Actual lengths to be determined in the field. Drive one 55' test pile in 1, one 55' test pile in Bent 3, and one 55' test pile in Bent 6.

BRIDGE DECK: The concrete bridge deck shall be given a tine fini specified for final finishing in subsection 802.20 for Class S Bridge R Surface Finish.

BOILED LINSEED OIL: Boiled linseed oil treatment shall be applied to th roadway surface and to the face and top of the concrete parapet r

| DETAIL DRAWINGS: | DRAWING NO. |
|---|---|
| End Bents | 32833, 32834, 32836 |
| Intermediate Bents | 32835 |
| W-Beam spans | 32837, 32838 |

Existing bridge M1615, log mile 8.95 (Site 3) is 24' wide and 133' long and consists of a precast concrete superstructure with an asphalt overla by a timber substructure.

Existing bridge M1613, log mile 8.79 (Site 1), is 24' wide and 38' long and consists of a precast concrete superstructure with an asphalt overla supported by a timber substructure.

Existing bridge M1614, log mile 8.91 (Site 2), is 24' wide and 57' long and consists of a precast concrete superstructure with an asphalt overla supported by a timber substructure.

Existing bridge M1616, log mile 9.02 (Site 4), is 24' wide and 38' long and consists of a precast concrete superstructure with an asphalt overla supported by a timber substructure.

REMOVAL AND SALVAGE: After the new bridge is opened to traffic, exis bridge M1615 shall be removed in accordance with section 205 of th Standard Specifications. For removal of existing bridges M1613, M1614 and M1616, see Roadway Plans. All material from the existing bridges shall beco the property of the contractor.

HYDRAULIC DATA

| | Frequency | Discharge c.f.s. | Normal Water Surface Elevation | Water Surface Elevation with Backwater |
|---|---|---|---|---|
| Design Flood | Q50 | 10,300 | 247.9 | 248.3 |
| Basic Flood | Q100 | 12,400 | 248.6 | 249.1 |
| Extreme Flood | Q500 | 18,200 | 250.4 | 251.2 |
| Overtopping Flood | Q83 | 11,900 | 248.5 | 248.9 |

D.A.= 85 mi.$^2$

STATE OF ARKANSAS REGISTERED PROFESSIONAL ENGINEER No. 1779 VERAL PINKERTON

Veral Pinkerton
BRIDGE ENGINEER

# LAYOUT OF BRIDGE OVER BAYOU TWO PRAIRIE
## BAYOU TWO PRAIRIE & RELIEF STRS. & LONOKE COUNTY
ROUTE 89 SEC. 1
ARKANSAS STATE HIGHWAY COMMISSI
LITTLE ROCK, ARK.

DRAWN BY: EJK DATE: 1-24-92
CHECKED BY: C.HART DATE: 3-16-92 SCALE: 1"=30'-
DESIGNED BY: AKW DATE: Feb-92
BRIDGE NO. 6463 DRAWING NO. 32832

EJK&553,060534XX1.L12;2,1,550,3001,605