DATE REVISED	DATE FILMED	DATE REVISED	DATE FILMED	FED. HIGHWAY REGT. NO.	STATE	FED. AID PROJ. NO.	SHEET NO.	TOTAL SHEETS
				6	ARK.			
				JOB NO.		001588	15	170
				(1) 6449-6453		QUANTITIES		32704

SCHEDULE OF BRIDGE QUANTITIES FOR JOB NO. 1588

BRIDGE NO. / CODE NO. / NAME PLATE TITLE	UNIT OF STRUCTURE	ITEM NO.	205	801	802	802	SP & 802	803	SS & 804	SS & 804	805	805	805	805	805	807	808	809	812	816	816
		ITEM	REMOVAL OF EXISTING BRIDGE STRUCTURE (SITE NO.)	UNCLASSIFIED EXCAVATION FOR STRUCTURES-BRIDGE	CLASS S CONCRETE-BRIDGE	PRESTRESSED CONCRETE GIRDER (TYPE III)	CLASS S(AE) CONCRETE-BRIDGE	BOILED LINSEED OIL	REINFORCING STEEL-BRIDGE (GRADE 60)	EPOXY COATED REINFORCING STEEL (GRADE 60)	CONCRETE PILING (16" OCT. OR 14" SQ.)	TEST PILES (16" OCT. OR 14" SQ.)	CONCRETE PILING (18" SQ.)	TEST PILES (18" SQ.)	DYNAMIC PILE LOAD TEST	STRUCTURAL STEEL IN BEAM SPANS (A588)	ELASTOMERIC BEARINGS	PREFORMED JOINT SEAL	BRIDGE NAME PLATE (TYPE C)	FILTER BLANKET	DUMPED RIPRAP
		UNIT	LUMP SUM	CU. YD.	CU. YD.	LIN. FT.	CU. YD.	GAL.	LB.	LB.	LIN. FT.	LIN. FT.	LIN. FT.	LIN. FT.	EACH	LB.	CU. IN.	LIN. FT.	EACH	SQ. YD.	CU. YD.
6449 / X081 / LAPILE CREEK	End Bent No. 1 & 5			49	59.73			0.4	6430		630	70			1	807				1796	898
	Interior Bent Nos. 2 thru 4				168.57				30621				1150	60	1						
	4 - 70' Prestressed Conc. Girder Spans					1656	371.40	29.3	6589	92560						9246	6534	214			
	(Site No. 1)		1.0																		
	TOTAL FOR BRIDGE NO. 6449			49	228.30	1656	371.40	29.7	43640	92560	630	70	1150	60	2	10053	6534	214		1796	898
6450 / X081 / BIG SLOUGH	End Bent No. 1 & 8			53	59.73			0.4	6428		495	55			1	807				1603	801
	Interior Bent Nos. 2 thru 7				337.17				61236				1610	90	2						
	7 - 70' Prestressed Conc. Girder Spans					2898	650.10	51.3	11526	162040						16181	11435	342			
	(Site No. 2)		1.0																		
	TOTAL FOR BRIDGE NO. 6450			53	396.90	2898	650.10	51.7	79190	162040	495	55	1610	90	3	16988	11435	342		1603	801
6451 / X081 / OUACHITA RIVER RELIEF	End Bent No. 1 & 6			52	59.73			0.4	6430		630	70			1	807				1809	904
	Interior Bent Nos. 2 thru 5				224.77				40824				1200	100	2						
	5 - 70' Prestressed Conc. Girder Spans					2070	464.70	36.7	8236	115740						11558	8168	257			
	(Site No. 3)		1.0																		
	TOTAL FOR BRIDGE NO. 6451			52	284.50	2070	464.70	37.1	55490	115740	630	70	1200	100	3	12365	8168	257		1809	904
6452 / X021 / OUACHITA RIVER RELIEF	End Bent No. 1 & 8			86	25.33				2948		455	50								1017	509
	Interior Bent Nos. 2 thru 7				72.07				8430				1395	115							
	7 - 35' R. C. Deck Girder Spans						589.40	25.7	44062	72780											
	(Site No. 4)		1.0																		
	TOTAL FOR BRIDGE NO. 6452			86	97.40		589.40	25.7	55440	72780	455	50	1395	115						1017	509
6453 / X021 / OUACHITA RIVER RELIEF	End Bent No. 1 & 8			50	25.33				2948		495	60								1161	580
	Interior Bent Nos. 2 thru 7				72.07				8430				1540	120							
	7 - 35' R. C. DECK GIRDER SPANS						589.40	25.7	44062	72780											
	(Site No. 5)		1.0																		
	TOTAL FOR BRIDGE NO. 6453			50	97.40		589.40	25.7	55440	72780	495	60	1540	120						1161	580
	TOTALS FOR JOB NO. 1588			290	1104.50	6624	2665.00	169.9	289200	515900	2705	305	6895	485	8	39406	26137	814	5	7386	3692

John A. Suge
DESIGN SECTION SUPERVISOR

STATE OF ARKANSAS
REGISTERED PROFESSIONAL ENGINEER
No. 1779
VERAL D. LAMBERTON

BRIDGE ENGINEER

SCHEDULE OF BRIDGE QUANTITIES
HWY. 82 BRS. & APPRS. (NEAR OUACHITA RIVER)
UNION COUNTY

ROUTE 82 SEC. 7

ARKANSAS STATE HIGHWAY COMMISSION
LITTLE ROCK, ARK.

DRAWN BY: KMG DATE: 4 Mar 93
CHECKED BY: CSL DATE: Mar. 5, 93 SCALE: None
DESIGNED BY: — DATE: —

BRIDGE NO. 6449-6453 DRAWING NO. 32704

DATE REVISED	DATE FILMED	DATE REVISED	DATE FILMED	FED. ROAD DIST. NO.	STATE	FED. AID PROJ. NO.	SHEET NO.	TOTAL SHEETS
				6	ARK.			
				JOB NO.		001588	43	170

(1) 6449-6451 BT. DTLS. 32706

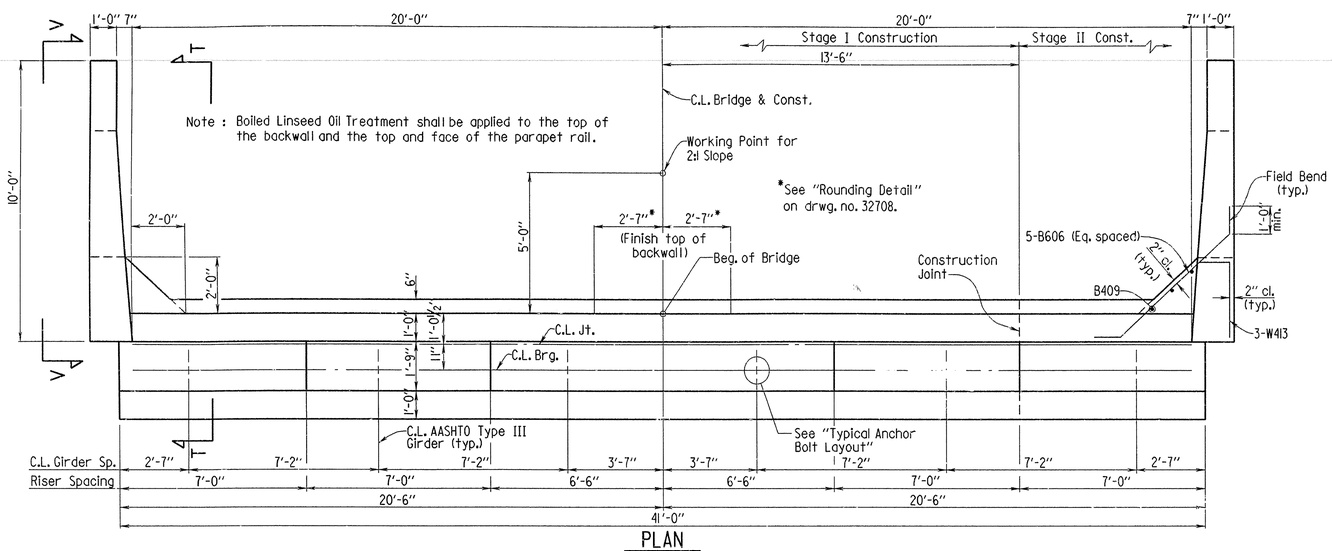

PLAN
Scale: 3/8" = 1'-0"

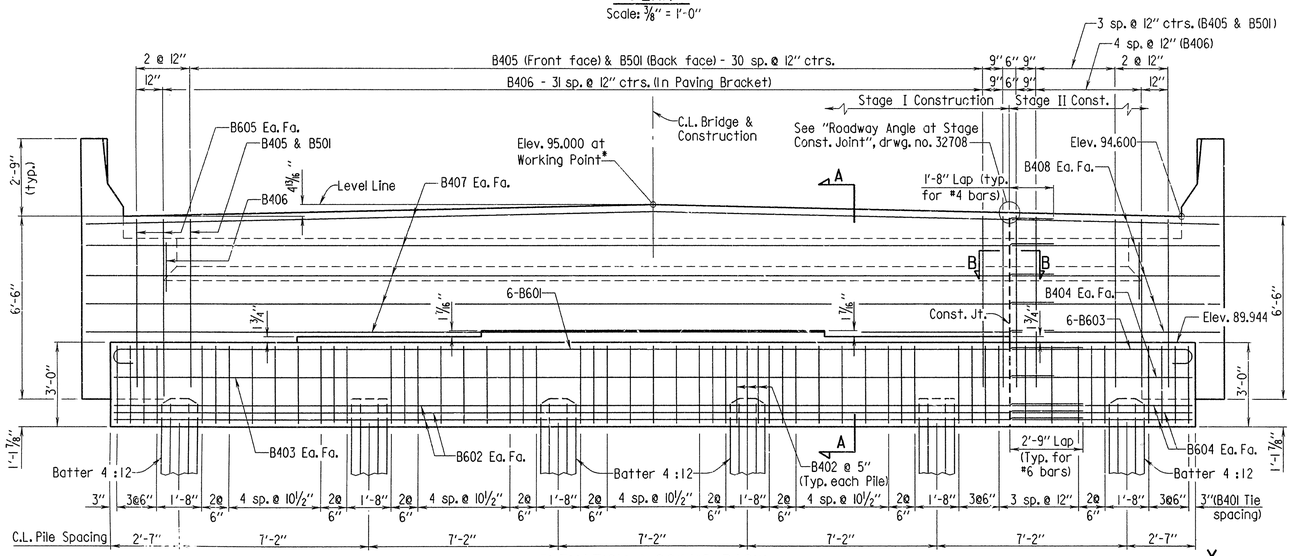

ELEVATION (LOOKING BACK)
Scale: 3/8" = 1'-0"

Note: For Section B-B, see drwg. no. 32708.

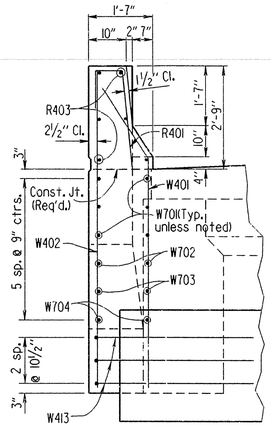

VIEW W-W
Scale: 1/2" = 1'-0"

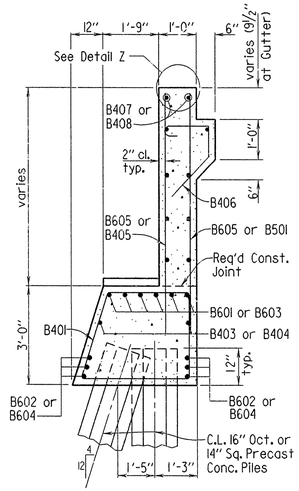

SECTION A-A
Scale: 1/2" = 1'-0"

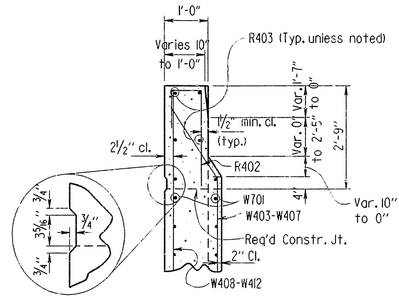

SECTION X-X
Scale: 1/2" = 1'-0"

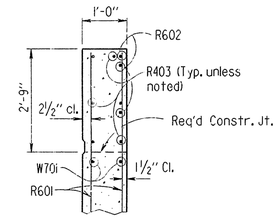

SECTION Y-Y
Scale: 1/2" = 1'-0"

BAR LIST (PER BENT)

Mark	No. Req'd.	Length	A	B	Pin Dia.
B401	53	11'-7"	2'-5"	3'-4"	2"
B402	18	7'-9"	2'-5"	3'-4"	2"
B403	2	35'-7"			Str.
B404	2	6'-9"			Str.
B405	37	6'-4"			Str.
B406	39	3'-11"	1'-2"	4½"	2"
B407	10	36'-8"			Str.
B408	10	7'-10"			Str.
B409	6	5'-5"			Str.
B501	37	6'-9"			Str.
B601	6	37'-4"	36'-8"	6"	4½"
B602	6	36'-8"			Str.
B603	6	7'-5"	6'-9"	6"	4½"
B604	6	6'-9"			Str.
B605	8	7'-0"			Str.
B606	10	7'-6"			Str.
R401	8	3'-11"			2"
R402	8	4'-0"			2"
R403	12	9'-8"			Str.
R601	16	4'-5"			Str.
R602	6	5'-0"			Str.
W401	6	7'-9"	6'-7"	1'-2"	2"
W402	6	8'-11"			Str.
W403-W407	2 Ea.	Var. 3'-5" to 5'-5"	Var. 2'-3" to 4'-3"	1'-2"	2"
W408-W412	2 Ea.	Var. 4'-6" to 6'-6"			Str.
W413	6	7'-7"			2"
W701	12	9'-8"			Str.
W702	4	6'-0"			Str.
W703	4	4'-6"			Str.
W704	4	8'-4"			5¼"

Bending Diagrams
(Dimensions are out to out of bars.)

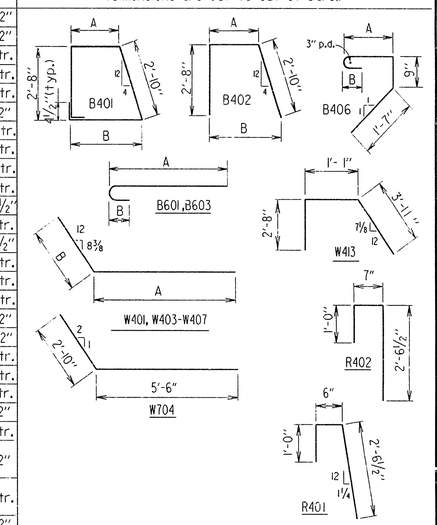

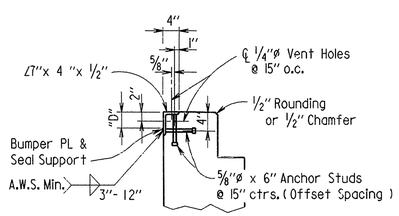

Note: For Joint Support Details & Dimension "D" see dwg. no. 32710.

DETAIL Z
Scale: 3/4" = 1'-0"

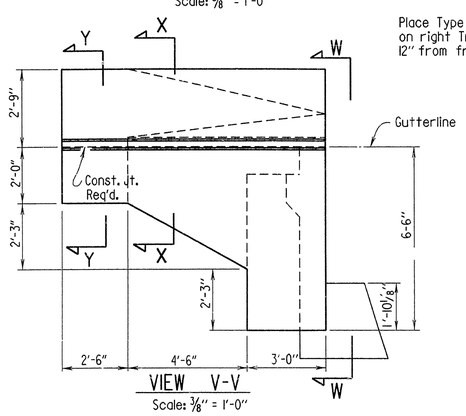

VIEW V-V
Scale: 3/8" = 1'-0"

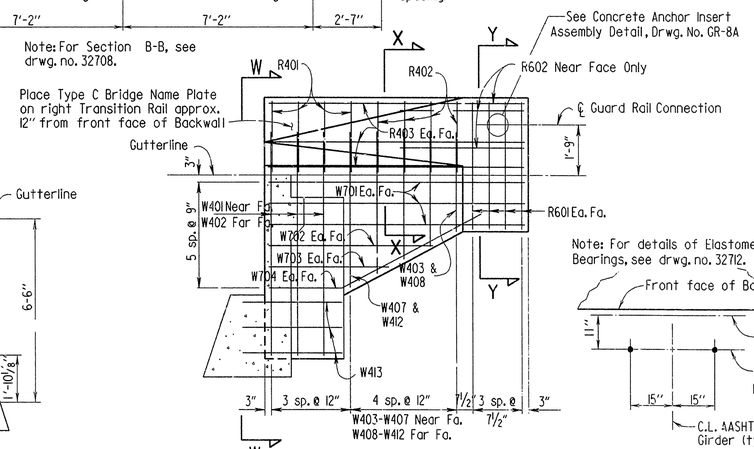

SECTION T-T
Scale: 3/8" = 1'-0"

Note: For details of Elastomeric Bearings, see drwg. no. 32712.

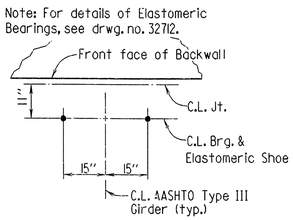

TYPICAL ANCHOR BOLT LAYOUT
No Scale

GENERAL NOTES

All concrete shall be Class "S" and shall be poured in the dry. All exposed corners shall be chamfered ¾" unless otherwise noted.

All reinforcing steel shall conform to ASTM A615 or A617, Grade 60.

End Bent backwall shall not be poured before beams are in place.

Structural steel in end bents shall be ASTM A36 and shall be paid for as "Structural Steel in Beam Spans (A36)".

If anchor bolts are drilled into cap, top reinforcing bars shall be properly spaced to avoid damage.

For additional information, see Layout.

STATE OF ARKANSAS REGISTERED PROFESSIONAL ENGINEER No. 1779 VERAL PINKERTON
BRIDGE ENGINEER

DETAILS OF PILE END BENTS FOR 70' PRESTRESSED CONC. GIRDER SPANS (BEG. OF BRIDGE ONLY)

ROUTE 82 SEC. 7

ARKANSAS STATE HIGHWAY COMMISSION

LITTLE ROCK, ARK.

DRAWN BY: KMG DATE: 15 Oct 91
CHECKED BY: CSL DATE: Jan. 93 SCALE: As Shown
DESIGNED BY: CSL DATE: Jan. 91

BRIDGE NO. 6449-6451 DRAWING NO. 32706

31588A.B11

DATE REVISED	DATE FILMED	DATE REVISED	DATE FILMED	FED. ROAD DIST. NO.	STATE	FED. AID PROJ. NO.	SHEET NO.	TOTAL SHEETS
				6	ARK.			
				JOB NO.		070072	33	120

(1) 6449-6451 BT. DTLS. 32706

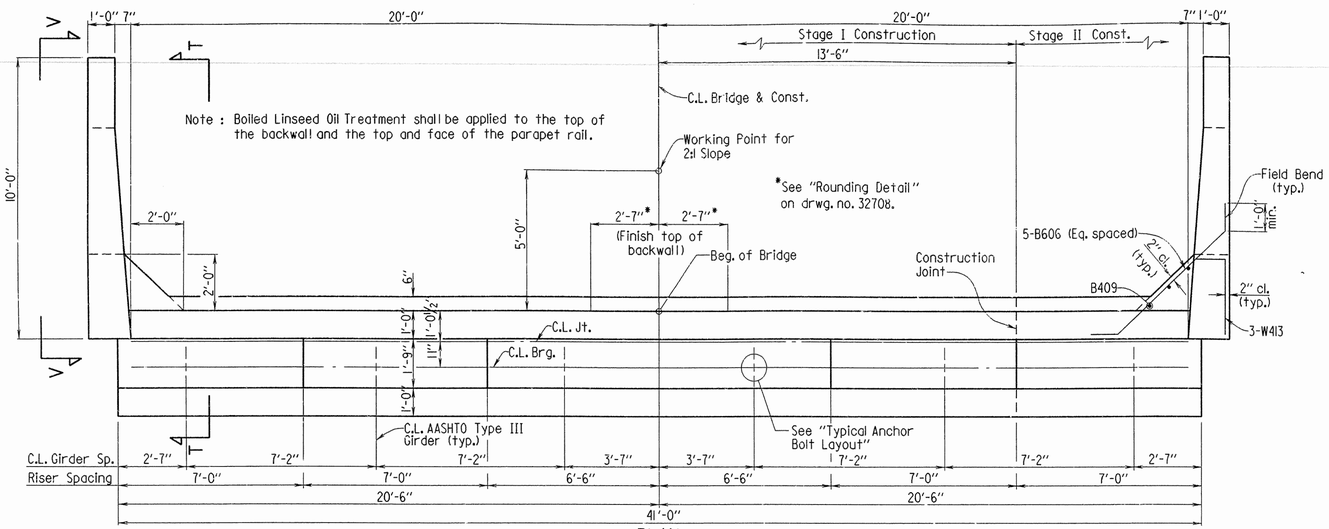

PLAN

Scale: 3/8" = 1'-0"

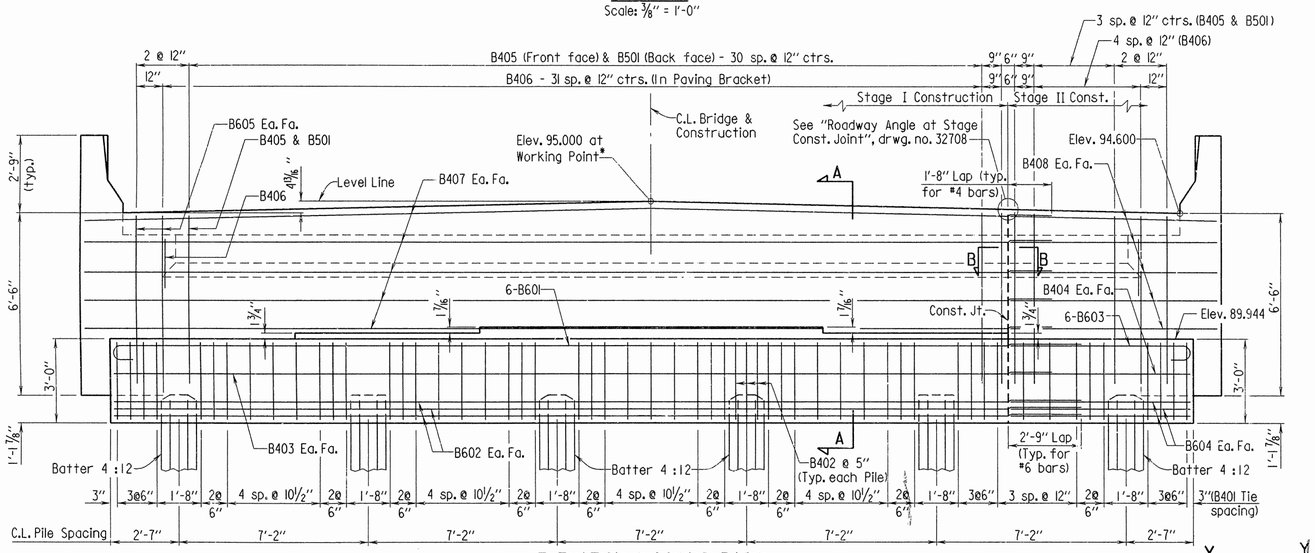

ELEVATION (LOOKING BACK)

Scale: 3/8" = 1'-0"

Note: For Section B-B, see drwg. no. 32708.

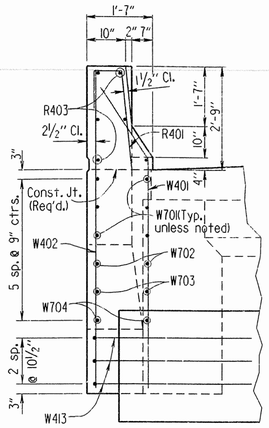

VIEW W-W

Scale: 1/2" = 1'-0"

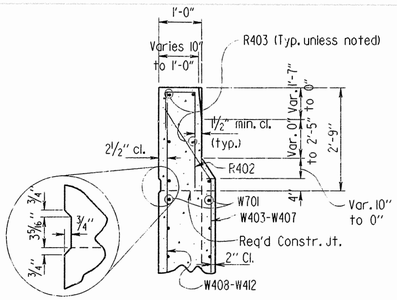

SECTION X-X

Scale: 1/2" = 1'-0"

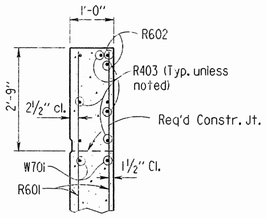

SECTION Y-Y

Scale: 1/2" = 1'-0"

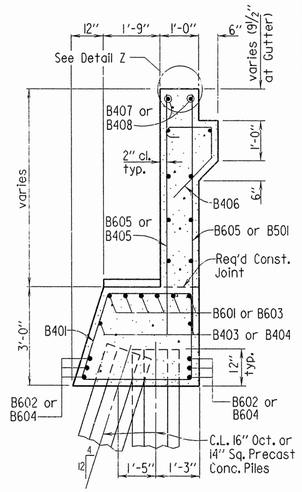

SECTION A-A

Scale: 1/2" = 1'-0"

BAR LIST (PER BENT)

Mark	No. Req'd.	Length	A	B	Pin Dia.
B401	53	11'-7"	2'-5"	3'-4"	2"
B402	18	7'-9"	2'-5"	3'-4"	2"
B403	2	35'-7"			Str.
B404	2	6'-9"			Str.
B405	37	6'-4"			Str.
B406	39	3'-11"	1'-2"	4½"	2"
B407	10	36'-8"			Str.
B408	10	7'-10"			Str.
B409	6	5'-5"			Str.
B501	37	6'-9"			Str.
B601	6	37'-4"	36'-8"	6"	4½"
B602	6	36'-8"			Str.
B603	6	7'-5"	6'-9"	6"	4½"
B604	6	6'-9"			Str.
B605	8	7'-0"			Str.
B606	10	7'-6"			Str.
R401	8	3'-11"			2"
R402	8	4'-0"			2"
R403	12	9'-8"			Str.
R601	16	4'-5"			Str.
R602	6	5'-0"			Str.
W401	6	7'-9"	6'-7"	1'-2"	2"
W402	6	8'-11"			Str.
W403-W407	2 Ea.	Var. 3'-5" to 5'-5"	Var. 2'-3" to 4'-3"	1'-2"	2"
W408-W412	2 Ea.	Var. 4'-6" to 6'-6"			Str.
W413	6	7'-7"			2"
W701	12	9'-8"			Str.
W702	4	6'-0"			Str.
W703	4	4'-6"			Str.
W704	4	8'-4"			5¼"

Bending Diagrams (Dimensions are out to out of bars.)

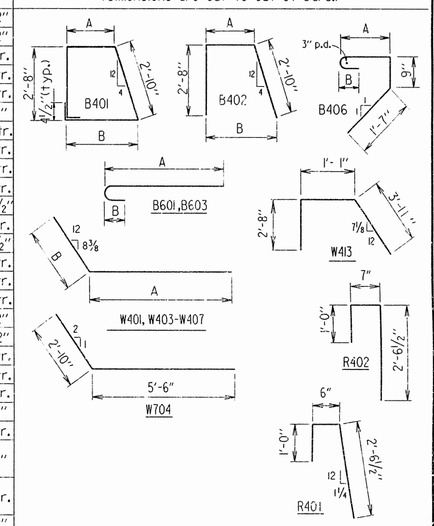

GENERAL NOTES

All concrete shall be Class "S" and shall be poured in the dry. All exposed corners shall be chamfered ¾" unless otherwise noted.

All reinforcing steel shall conform to ASTM A615 or A617, Grade 60.

End Bent backwall shall not be poured before beams are in place.

Structural steel in end bents shall be ASTM A36 and shall be paid for as "Structural Steel in Beam Spans (A36)".

If anchor bolts are drilled into cap, top reinforcing bars shall be properly spaced to avoid damage.

For additional information, see Layout.

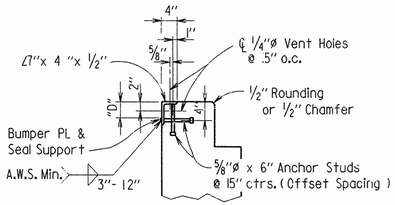

Note: For Joint Support Details & Dimension "D" see dwg. no. 32710.

DETAIL Z

Scale: 3/4" = 1'-0"

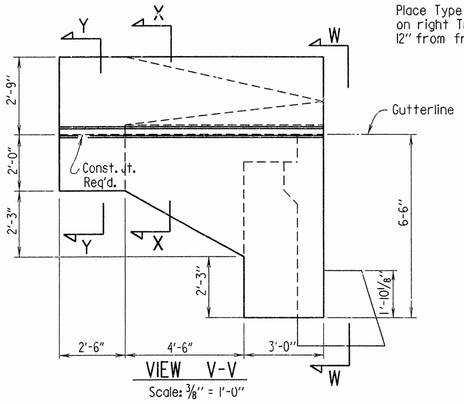

VIEW V-V

Scale: 3/8" = 1'-0"

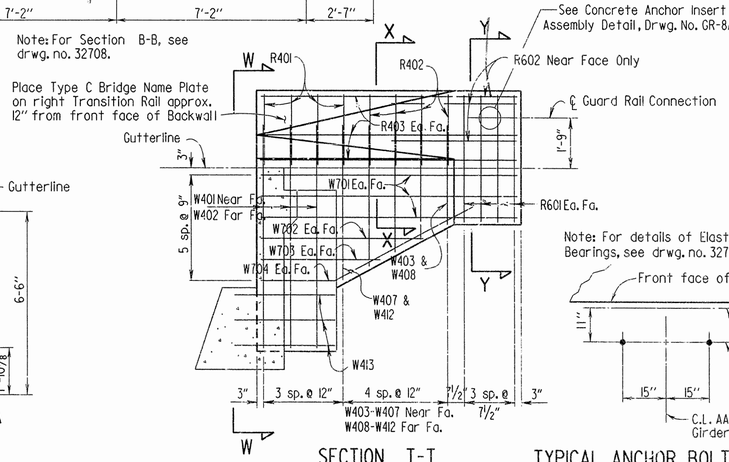

SECTION T-T

Scale: 3/8" = 1'-0"

Note: For details of Elastomeric Bearings, see drwg. no. 32712.

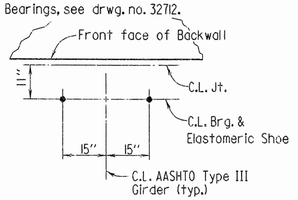

TYPICAL ANCHOR BOLT LAYOUT

No Scale

STATE OF ARKANSAS REGISTERED PROFESSIONAL ENGINEER No. 1779 VERAL DINGERSON

BRIDGE ENGINEER

DETAILS OF PILE END BENTS FOR 70' PRESTRESSED CONC. GIRDER SPANS (BEG. OF BRIDGE ONLY)

ROUTE 82 SEC. 7

ARKANSAS STATE HIGHWAY COMMISSION

LITTLE ROCK, ARK.

DRAWN BY: KMG DATE: 15 Oct 91

CHECKED BY: CSL DATE: Jan. 93 SCALE: As Shown

DESIGNED BY: CSL DATE: Jan. 91

BRIDGE NO. 6449-6451 DRAWING NO. 32706

B1588A.B11

DATE REVISED	DATE FILMED	DATE REVISED	DATE FILMED	FED. ROAD DIST. NO.	STATE	FED. AID PROJ. NO.	SHEET NO.	TOTAL SHEETS
				6	ARK.			
				JOB NO.		070072	34	120

(1) 6449-6451 BENT DTLS. 32707

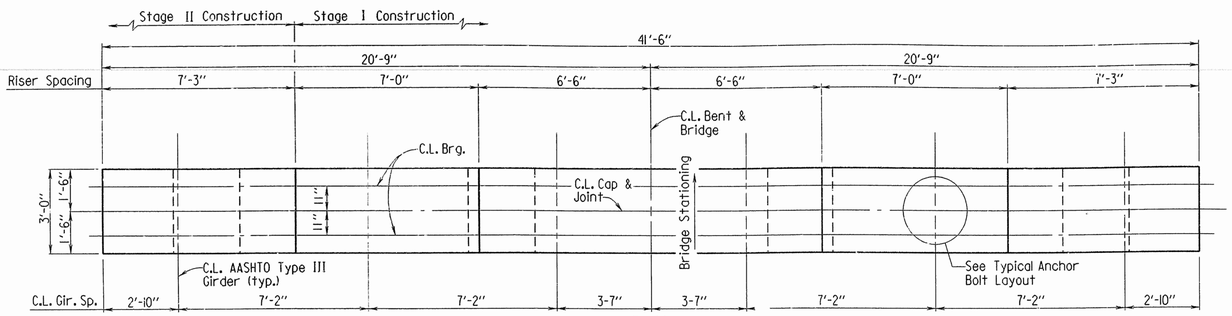

PLAN
Scale: 3/8" = 1'-0"

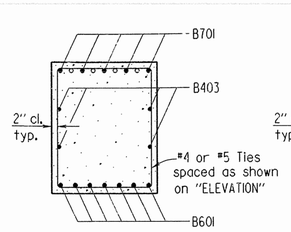

SECTION B-B
Scale: 1/2" = 1'-0"

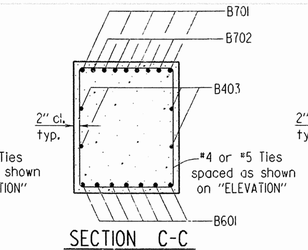

SECTION C-C
Scale: 1/2" = 1'-0"

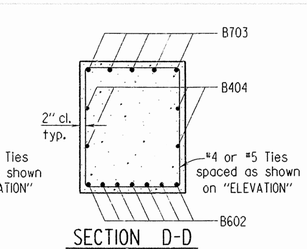

SECTION D-D
Scale: 1/2" = 1'-0"

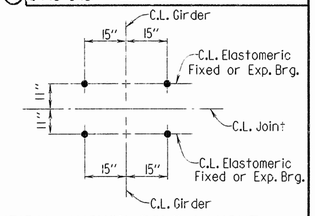

TYPICAL ANCHOR BOLT LAYOUT
No Scale

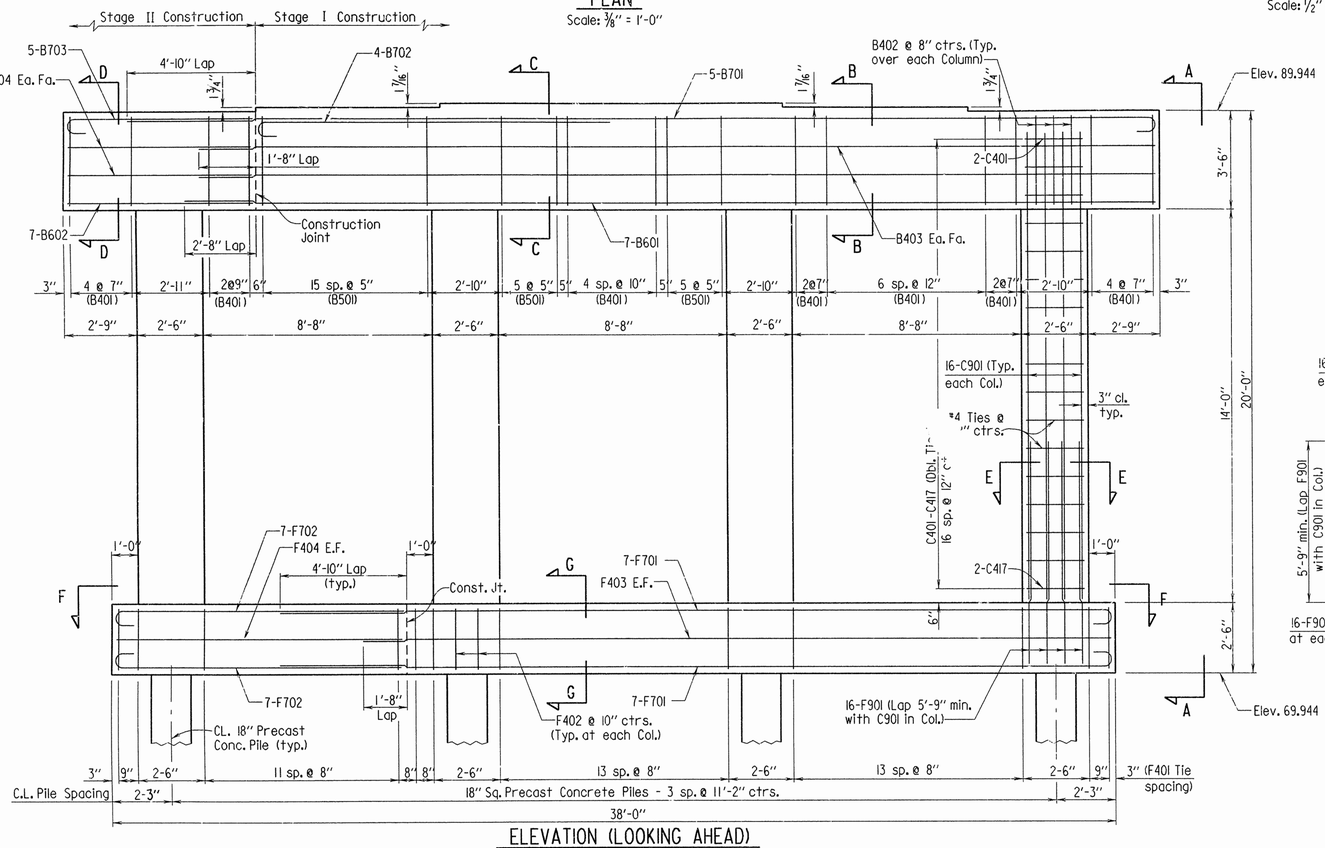

ELEVATION (LOOKING AHEAD)
Scale: 3/8" = 1'-0"

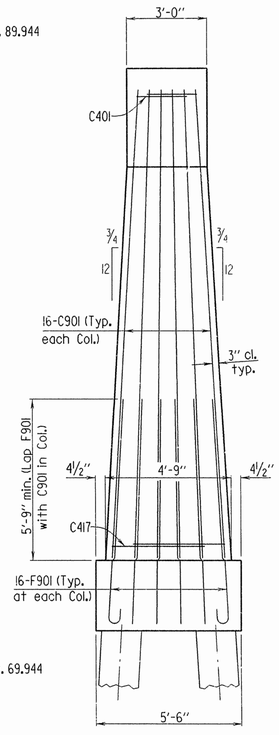

VIEW A-A
Scale: 3/8" = 1'-0"

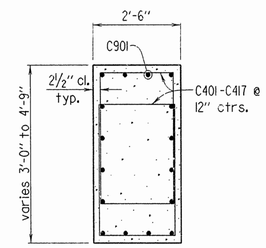

SECTION E-E
Scale: 1/2" = 1'-0"

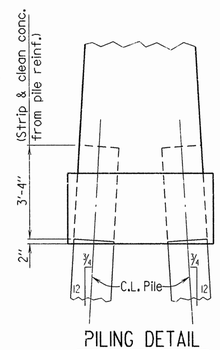

PILING DETAIL
Scale: 3/8" = 1'-0"

Note: Measurement for payment of concrete piling shall be made to a point 3'-6" above bottom of subcap. Work of stripping pile to provide lap with column bars shall not be paid for directly but shall be considered subsidiary to the item for concrete piling. Cut-offs and build-ups shall be in accordance with the standard specifications.

BAR LIST (PER BENT)

MARK	NO. REQ'D.	LENGTH	'A'	'B'	P.D.
B401	29	12'-0"	3'-2"	2'-8"	2"
B402	12	8'-10"	3'-2"	2'-8"	2"
B403	4	35'-10"			str.
B404	4	7'-0"			str.
B501	28	12'-2"	3'-2"	2'-8"	2 1/2"
B601	7	36'-10"			str.
B602	7	7'-0"			str.
B701	5	39'-10"	39'-0"	7"	5 1/4"
B702	4	14'-4"	13'-6"	7"	5 1/4"
B703	5	7'-10"	7'-0"	7"	5 1/4"
C401-C417	8 of each	var. 8'-3" to 11'-6"	var. 1'-10 1/2" to 3'-6"	2'-1"	2"
C901	64	16'-9"			str.
F401	46	14'-8"	2'-1"	5'-1"	2"
F402	8	9'-1"	2'-1"	5'-1"	2"
F403	2	28'-5"			str.
F404	2	10'-11"			str.
F701	14	32'-4"	31'-6"	7"	5 1/4"
F702	14	11'-9"	10'-11"	7"	5 1/4"
F901	64	9'-3"	8'-0"	10"	9"

BENDING DIAGRAMS

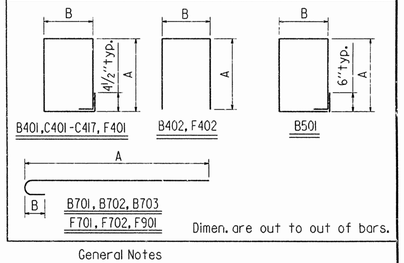

General Notes

All concrete shall be Class "S" with a minimum 28 day compressive strength f'c = 3,500 psi. Concrete shall be poured in the dry and all exposed corners to be chamfered 3/4" unless otherwise noted.

All reinforcing steel shall conform to ASTM A615 or A617, Grade 60 (yield strength = 60,000 psi.).

If anchor bolts are drilled into cap, top reinforcing bars shall be properly placed to avoid damage.

For additional information see layout.

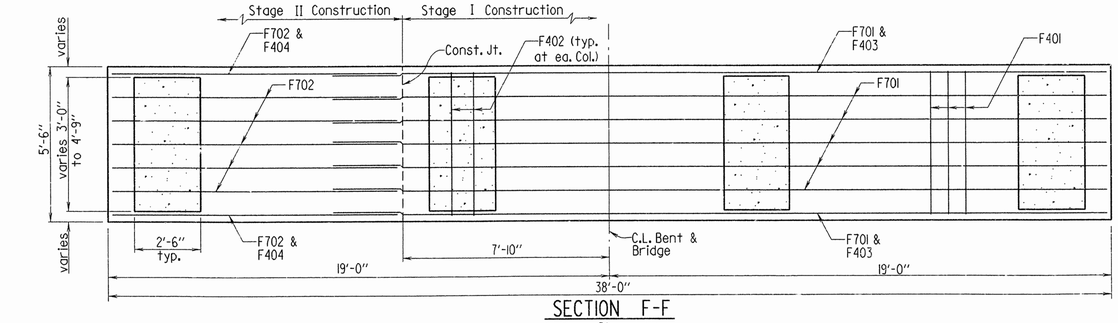

SECTION F-F
Scale: 3/8" = 1'-0"

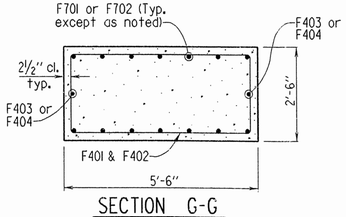

SECTION G-G
Scale: 1/2" = 1'-0"

STATE OF ARKANSAS REGISTERED PROFESSIONAL ENGINEER No. 1779 VERAL PINKERTON

BRIDGE ENGINEER

DETAILS OF INTERMEDIATE A-FRAME PILE BENTS FOR 70' PRESTRESSED CONC. GIRDER SPANS

ROUTE 82 SEC. 7

ARKANSAS STATE HIGHWAY COMMISSION

LITTLE ROCK, ARK.

DRAWN BY: KMG DATE: 10 Oct 91
CHECKED BY: CSL DATE: Jan. 93
DESIGNED BY: CSL DATE: Jan 91
SCALE: As Shown

BRIDGE NO. 6449-6451 DRAWING NO. 32707

B1588A. B21

DATE REVISED	DATE FILMED	DATE REVISED	DATE FILMED	FED. ROAD DIST. NO.	STATE	FED. AID PROJ. NO.	SHEET NO.	TOTAL SHEETS
				6	ARK.			
				JOB NO.		070072	35	120
				(1) 6449-6451		BT. DTLS.		32708

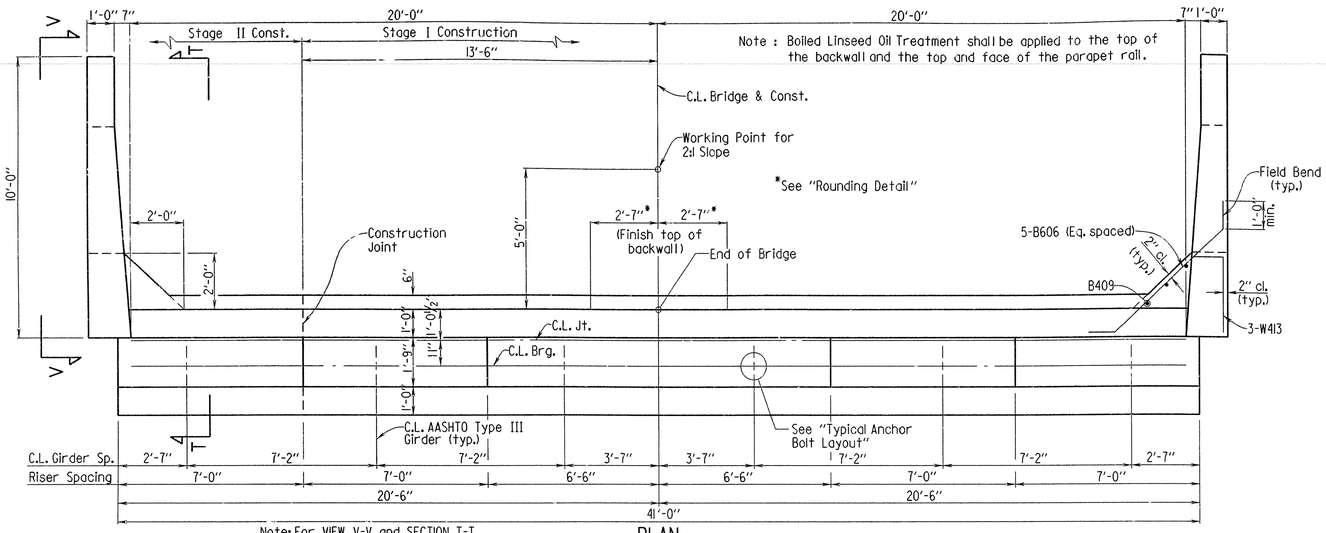

PLAN

Scale: 3/8" = 1'-0"

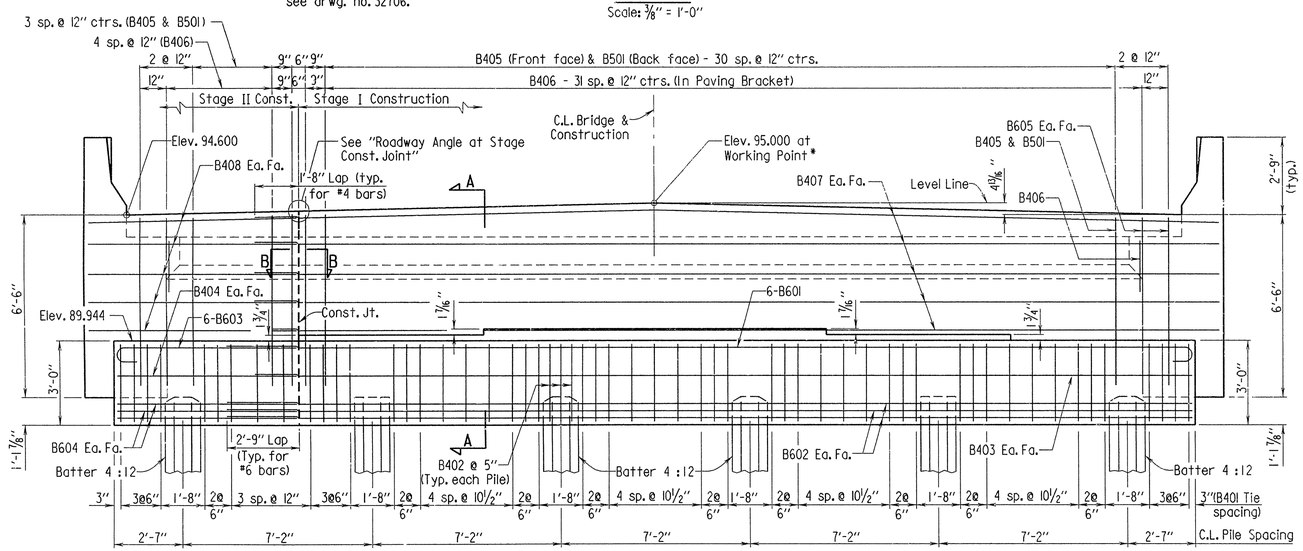

ELEVATION (LOOKING AHEAD)

Scale: 3/8" = 1'-0"

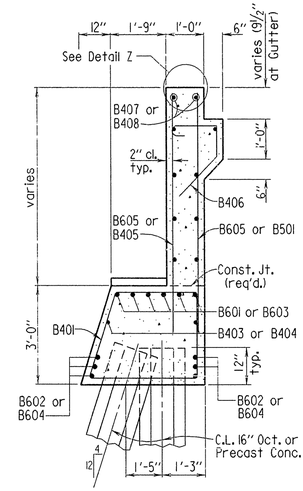

SECTION A-A

Scale: 1/2" = 1'-0"

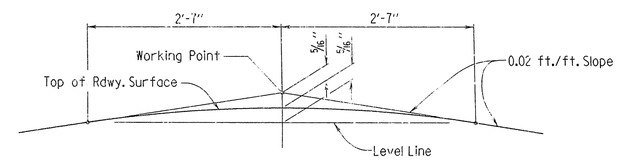

NOTE: Working Point matches Theoretical Roadway Grade.

ROUNDING DETAIL

No Scale

BAR LIST (PER BENT)

Mark	No. Req'd.	Length	A	B	Pin Dia.
B401	53	11'-7"	2'-5"	3'-4"	2"
B402	18	7'-9"	2'-5"	3'-4"	2"
B403	2	35'-7"			Str.
B404	2	6'-9"			Str.
B405	37	6'-4"			Str.
B406	39	3'-11"	1'-2"	4½"	2"
B407	10	36'-8"			Str.
B408	10	7'-10"			Str.
B409	6	5'-5"			Str.
B501	37	6'-9"			Str.
B601	6	37'-4"	36'-8"	6"	4½"
B602	6	36'-8"			Str.
B603	6	7'-5"	6'-9"	6"	4½"
B604	6	6'-9"			Str.
B605	8	7'-0"			Str.
B606	10	7'-6"			Str.
R401	8	3'-11"			2"
R402	8	4'-0"			2"
R403	12	9'-8"			Str.
R601	16	4'-5"			Str.
R602	6	5'-0"			Str.
W401	6	7'-9"	6'-7"	1'-2"	2"
W402	6	8'-11"			Str.
W403-W407	2 Ea.	Var. 3'-5" to 5'-5"	Var. 2'-3" to 4'-3"	1'-2"	2"
W408-W412	2 Ea.	Var. 4'-6" to 6'-6"			Str.
W413	6	7'-7"			2"
W701	12	9'-8"			Str.
W702	4	6'-0"			Str.
W703	4	4'-6"			Str.
W704	4	8'-4"			5¼"

Bending Diagrams (Dimensions are out to out of bars.)

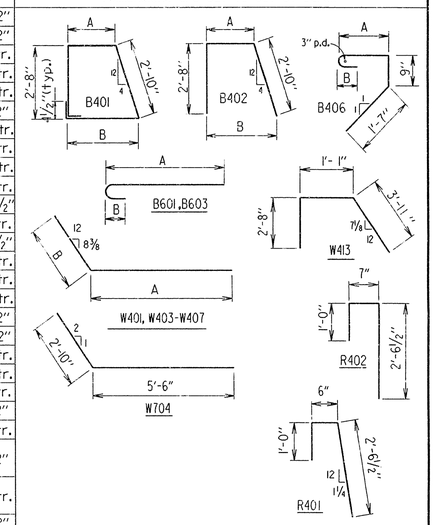

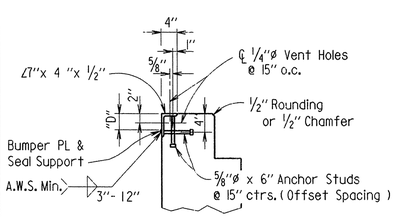

Note: For Joint Support Details & Dimension "D" see dwg. no. 32710.

DETAIL Z

Scale: 3/4" = 1'-0"

Note: For details of Elastomeric Bearings, see drwg. no. 32712.

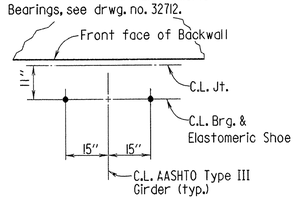

TYPICAL ANCHOR BOLT LAYOUT

No Scale

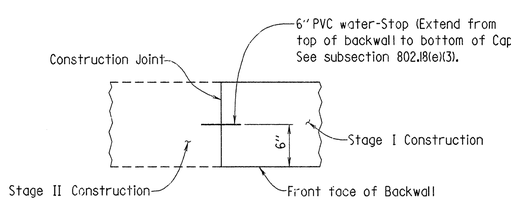

SECTION B-B

No Scale

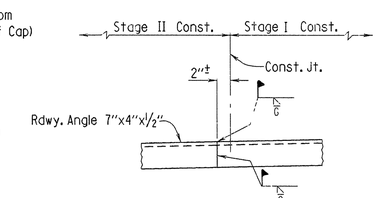

ROADWAY ANGLE AT STAGE CONST. JOINT

No Scale

Note: For General Notes, see drwg. no. 32706.

STATE OF ARKANSAS REGISTERED PROFESSIONAL ENGINEER No. 1779

BRIDGE ENGINEER

DETAILS OF PILE END BENTS FOR 70' PRESTRESSED CONC. GIRDER SPANS (END OF BRIDGE ONLY)

ROUTE 82 SEC. 7

ARKANSAS STATE HIGHWAY COMMISSION

LITTLE ROCK, ARK.

DRAWN BY: KMG DATE: 15 Oct 91
CHECKED BY: CSL DATE: Jan. 93 SCALE: As Shown
DESIGNED BY: CSL DATE: Jan. 91

BRIDGE NO. 6449-6451 DRAWING NO. 32708

B1588A. B12

DATE REVISED	DATE FILMED	DATE REVISED	DATE FILMED	FED. ROAD DIST. NO.	STATE	FED. AID PROJ. NO.	SHEET NO.	TOTAL SHEETS
				6	ARK.			
				JOB NO.		070072	36	120
				(1) 6449-6451		SPAN DTLS.		32709

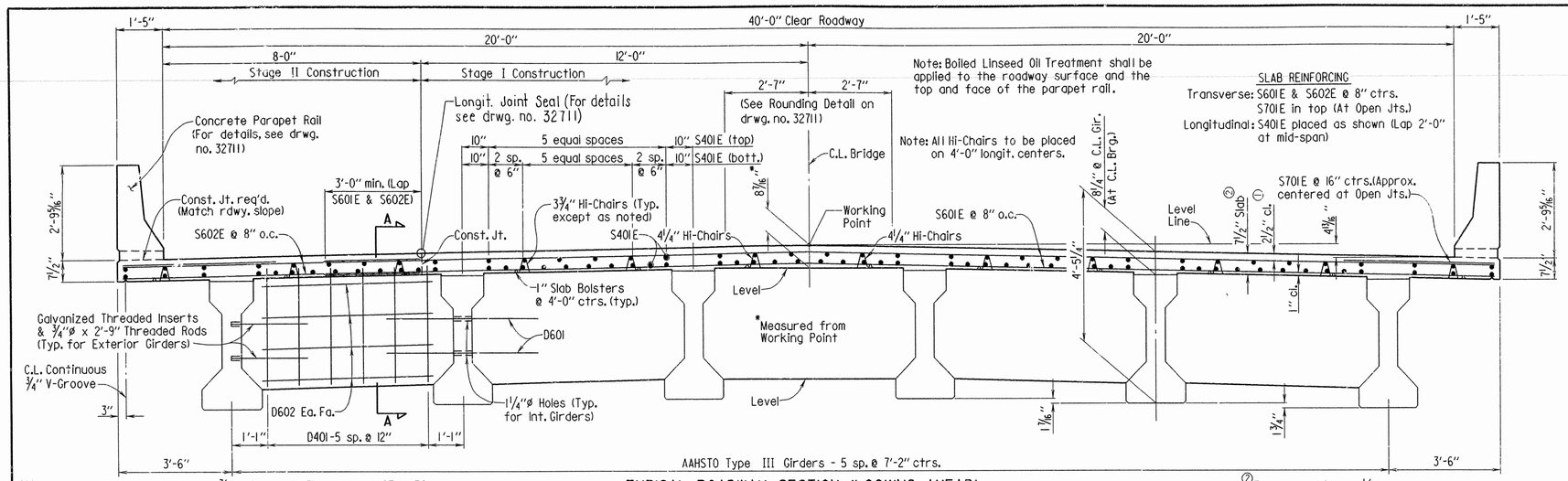

*** Galvanized Threaded Inserts & ¾"ø Threaded Rods to be ASTM A36. (Non-Pay Item-subsidiary to the item "Prestressed Concrete Girders.") Galvanizing shall be in accordance with ASTM A513.

TYPICAL ROADWAY SECTION (LOOKING AHEAD)

Scale: ½" = 1'-0"

(1) Tolerance: Minus = ¼" Plus - Equal to the amount of Slab thickening used to meet slab thickness tolerance.

(2) Tolerance: Minus = ¼" Plus = 1" Slab may be thickened and/or the haunch thickened to maintain slab tolerance. No increase in concrete quantities will be made to meet slab tolerances.

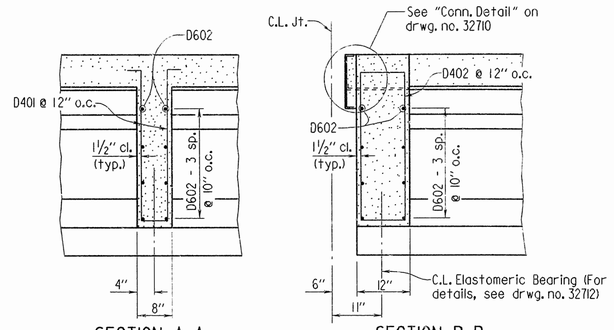

SECTION A-A

Scale: ¾" = 1'-0"

SECTION B-B

Scale: ¾" = 1'-0"

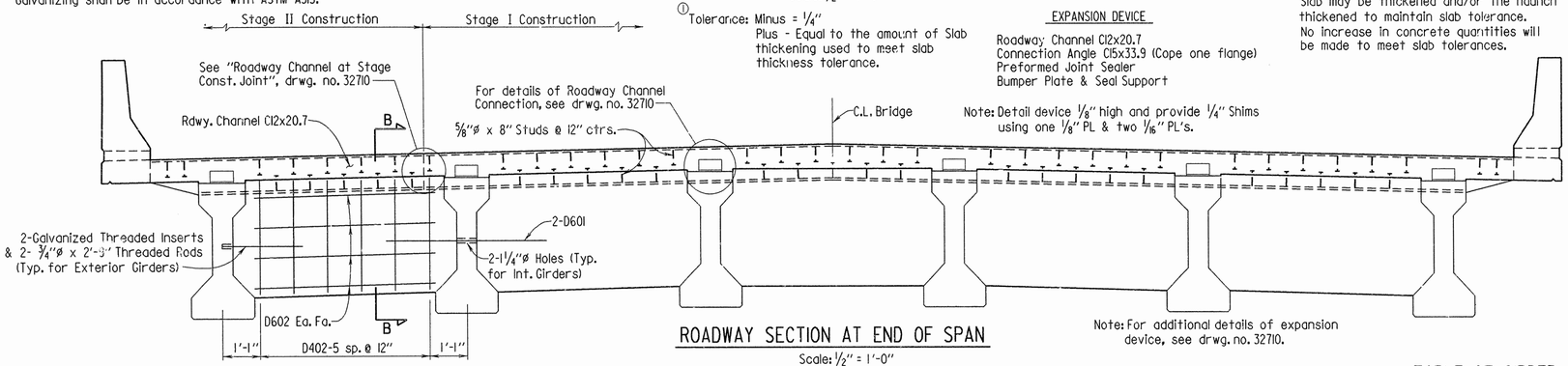

Tolerance: Minus = ¼" Plus - Equal to the amount of Slab thickening used to meet slab thickness tolerance.

EXPANSION DEVICE

Roadway Channel C12x20.7
Connection Angle C15x33.9 (Cope one flange)
Preformed Joint Sealer
Bumper Plate & Seal Support

Note: Detail device ⅛" high and provide ¼" Shims using one ⅛" PL & two 1/16" PL's.

ROADWAY SECTION AT END OF SPAN

Scale: ½" = 1'-0"

Note: For additional details of expansion device, see drwg. no. 32710.

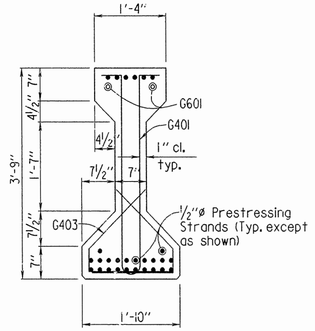

SECTION C-C

Scale: ¾" = 1'-0"

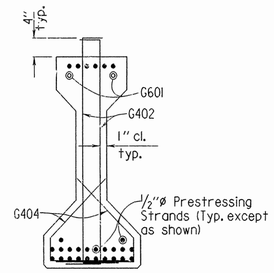

SECTION D-D

Scale: ¾" = 1'-0"

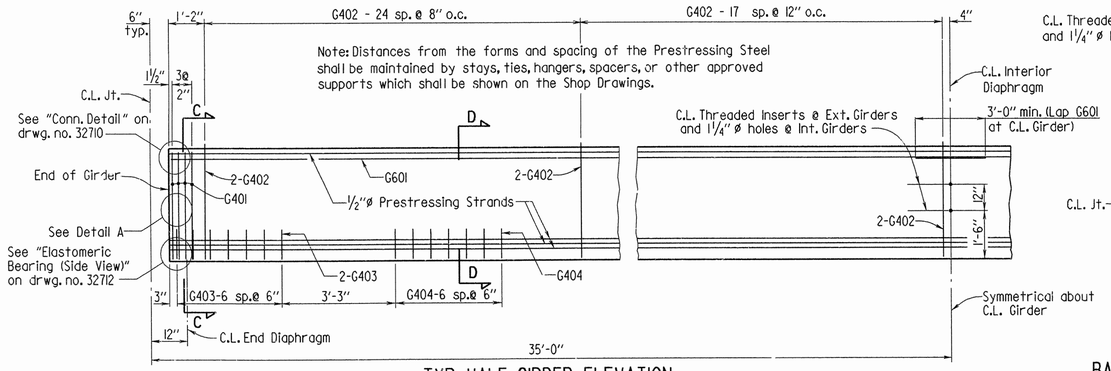

TYP. HALF-GIRDER ELEVATION

(AASHTO Type III Girder)
Scale: ½" = 1'-0"

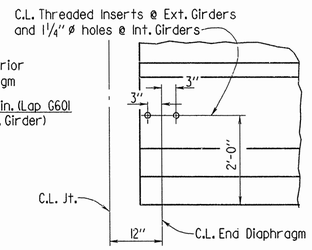

DETAIL A

Scale: ¾" = 1'-0"

TABLE OF GIRDER VARIABLES

STRAND DESIGNATION		VARIABLES OF BONDING/DEBONDING						
ROW	LINE	"A"	"B"	"C"	"D"	"E"	"F"	"G"
1	A B C D E F G H J K	69'-0"						
2	A B C D E F G H J K	69'-0"						
3	B J		8'-0"	53'-0"				
21	E F				40'-0"	29'-0"		
21	C H	69'-0"						
21	D G						29'-0"	40'-0"

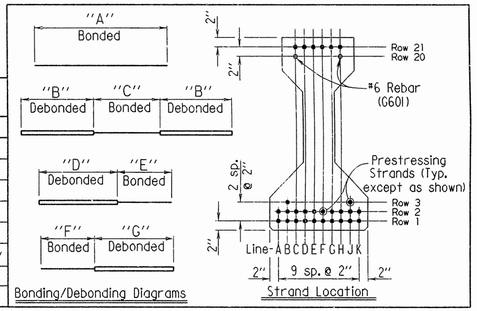

Note: For General Notes, see drwg. no. 32710 & 32711.

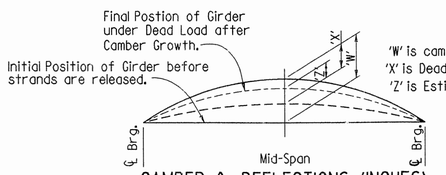

'W' is camber of Girder (Prestress + Dead Load of Girder)
'X' is Dead Load Deflection of Slab + Diaphragms
'Z' is Estimated Camber Growth

CAMBER & DEFLECTIONS (INCHES)

No Scale

TABLE OF DEFLECTIONS

	¼ SPAN		MID-SPAN	
	Ext. Gir.	Int. Gir.	Ext. Gir.	Int. Gir.
W	15/16"	15/16"	1 5/16"	1 5/16"
X	½"	7/16"	¾"	9/16"
Z	3/16"	3/16"	7/16"	7/16"

BAR LIST - SPAN TOTAL (GIRDERS ONLY)

MARK	NO.REQD.	LENGTH	P.D.
G401	48	8'-0"	2"
G402	1008	5'-5"	2"
G403	168	3'-4"	2"
G404	84	5'-2"	2"
G601	24	35'-11"	Str.

All bars in this list shall be subsidiary to item 'Prestressed Concrete Girders.'

BENDING DIAGRAMS

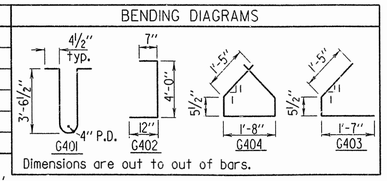

Dimensions are out to out of bars.

For Bar List of Span Reinforcing, See Dwg. No. 32711.

STATE OF ARKANSAS REGISTERED PROFESSIONAL ENGINEER No. 17779 VERAL PINKERTON

BRIDGE ENGINEER

SHEET 1 OF 3
DETAILS OF 70'-0" COMPOSITE PRESTRESSED CONC. GIRDER SPANS

ROUTE 82 SEC. 7
ARKANSAS STATE HIGHWAY COMMISSION
LITTLE ROCK, ARK.

DRAWN BY: KMG DATE: 25 Sept 91
CHECKED BY: JSB DATE: Oct. 91 SCALE: As Shown
DESIGNED BY: CSL DATE: Jan 90

BRIDGE NO. 6449-6451 DRAWING NO. 32709

B1588.S11

(1,550,3001,1588:KMGE510)

DATE REVISED	DATE FILMED	DATE REVISED	DATE FILMED	FED. ROAD DIST. NO.	STATE	FED. AID PROJ. NO.	SHEET NO.	TOTAL SHEETS
				6	ARK.			
				JOB NO.		070072	37	120
				(1) 6449-6451		SPAN DTLS.		32710

JOINT SEAL DATA

"A" Joint Width Perpendicular To Joint @ 60°F*	"B" Perpendicular To Joint	"C" Uncompressed Seal Width	"W" Width Between Plates	Bumper Plate Size
1"	6"	**1 5/8"	1/4"	1"x 3/8"
1 1/8"	6"	1 3/4"	3/8"	1"x 3/8"
1 1/4"	6"	2"	1/2"	1"x 3/8"
1 5/8"	6"	2 1/2"	5/8"	1"x 1/2"
1 7/8"	6"	3"	5/8"	1"x 5/8"
2 1/4"	6"	3 1/2"	3/4"	1"x 3/4"
2 5/8"	6"	4"	7/8"	1"x 7/8"

* Installation is limited to 40° F. min. and 80° F. max.
** 1 3/4" Seal may be used.

Note: The Seal shall be in one piece (without splices) for the full length of the Joint, except that lengths 55 feet and longer may have a factory made splice. Splices, when required, shall be shown on the Shop Drawings and shall be placed near the high ends of the Roadway. Separation of the Splice during installation shall be cause for rejection of the Seal.

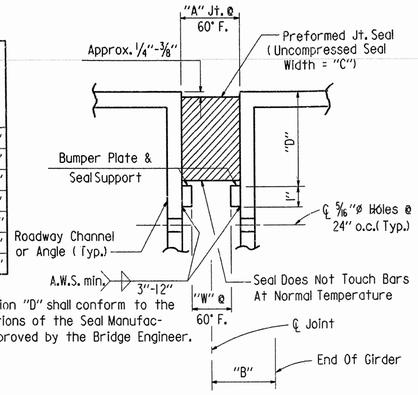

Note: Dimension "D" shall conform to the recommendations of the Seal Manufacturer as approved by the Bridge Engineer.

DETAIL OF JOINT SEAL & SUPPORT

N.T.S.

Note: For Joint sizes, see Bridge Layouts.

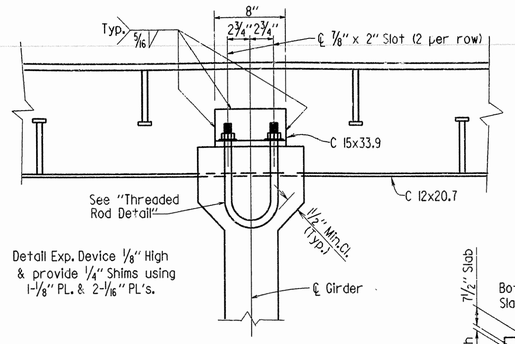

SECTION B-B

Scale: 1 1/2" = 1'-0"

Note: Threaded U-Rods, Washers & Hex Nuts to be ASTM A36 & shall be considered subsidiary to the item "Prestressed Concrete Girders."

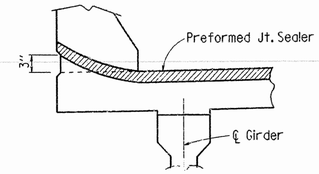

SEAL PLACEMENT IN CURB

Scale: 3/4" = 1'-0"

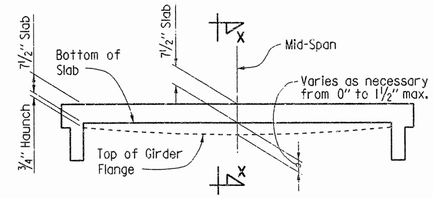

GIRDER ELEVATION

No Scale

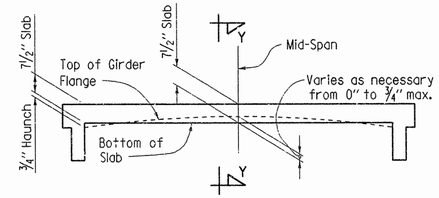

GIRDER ELEVATION

No Scale

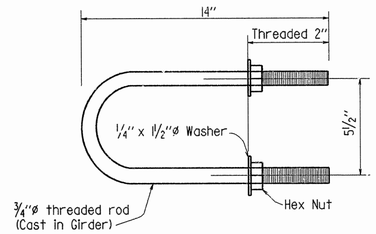

(1) THREADED ROD DETAIL

Scale: 3" = 1'-0"

(1) Contractor may substitute 3/4" Threaded Inserts & Bolts. Either system shall be considered subsidiary to the item "Prestressed Concrete Girders."

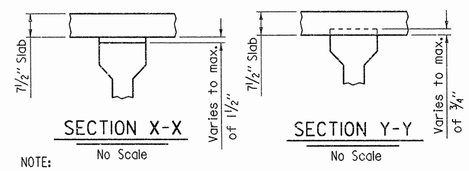

SECTION X-X

No Scale

SECTION Y-Y

No Scale

NOTE:
'Girder Elevation' sketches show the range of acceptability of the top of the Girder relative to bottom of slab after the placement of the slab. When the top of the Girder projects more than 3/4" into the slab, a raise in Grade will be necessary.
Girders shall be set in a sufficient number of spans so when adjustment is necessary the Profile Grade can be adjusted over suitable increments so the revised Grade Line will produce a smooth riding surface. Variation of haunch height will be at the Contractor's expense.

GENERAL NOTES - GIRDERS ONLY

Pretensioning steel shall be 1/2" ø Low Relaxation strands with a minimum ultimate strength of 270 ksi, and shall conform to ASTM A416.

Strands Requiring Debonding shall be blanketed over the regions shown with sheathing. Sheathing shall be either split plastic or solid plastic with a minimum wall thickness of 0.025 inch. To prevent concrete from contacting the strands within the debonded length, sheathing shall be thoroughly taped at each end. Split sheathing shall be additionally sealed along its entire length by thorough taping.

All girders shall be Type III as noted on the details and shall be the standard prestressed sections adopted by the Joint Committee of AASHTO and the Prestressed Concrete Institute. All girders shall be cast in concrete floored pallets and in metal forms.

Concrete shall be Class 'S' and shall have a minimum 28 day compressive strength, f'c = 5,000 psi.

The initial tensile force applied to each 1/2" ø strand shall be 30,983 lbs. Transfer of this tensioning load to the girder shall not be done until the compressive strength of the concrete is 4,000 psi.

Dimensions shown are to the center of the strands.

The contractor shall submit the method and sequence for release of strands to the Bridge Engineer for approval prior to casting of the girders.

Tops of the girders shall be rough floated at approximately the time of set. The entire tops of girders shall be scrubbed transversely with a coarse wire brush to remove all laitance and to produce a roughened surface for bonding slabs.

All exposed steel at end of girders shall be protected against corrosion by a coating of tar or other water proofing material.

Girders must be maintained in an upright position at all times and must be picked up from points near the girder ends. Disregard of this requirement may lead to collapse of the girder. The contractor's proposed lifting details shall be submitted on shop drawings to the Bridge Engineer for approval. The use of holes for lifting purposes will not be permitted.

Reinforcing steel shall be ASTM A615 or A617, Grade 60 (Fy = 60,000 psi.)

The contractor may submit alternate strand patterns with design calculations for review and approval.

For additional General Notes, See Dwg. No. 32711.

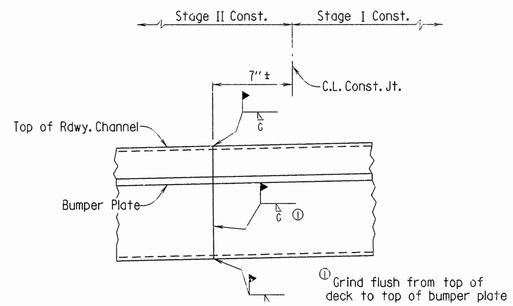

ROADWAY CHANNEL AT STAGE CONST. JOINT

No Scale

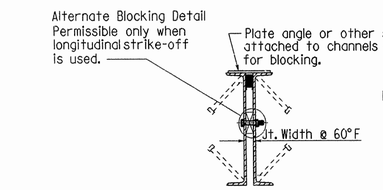

DETAIL FOR BLOCKING EXP. JT. DEVICE

Scale: 1 1/2" = 1'-0"

Note: Each Expansion Joint Device shall be blocked in the shop by the fabricator to the Joint Width @ 60°F, and the blocking details shall be shown on the Shop Drawings. The blocking shall not be removed until pouring of the slab on one side is complete. Removal shall be just before pouring the second side of joint, as directed by the Engineer. Blocking shall be placed within 2 feet of each end of the exp. device and with a maximum spacing of 8 feet.
Blocking Detail shown is for joint at Int. Bent. Joint at End Bent is similar.

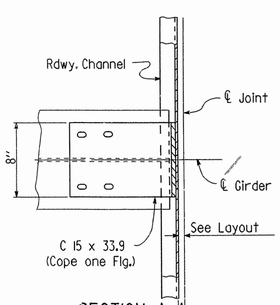

SECTION A-A

Scale: 1 1/2" = 1'-0"

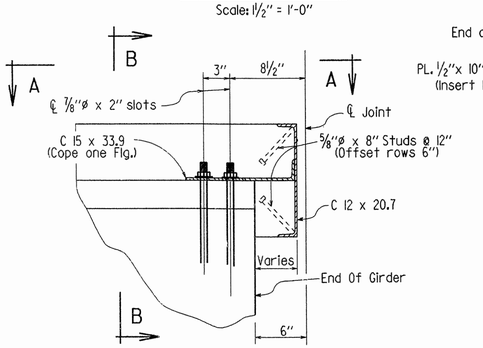

CONNECTION DETAIL

Scale: 1 1/2" = 1'-0"

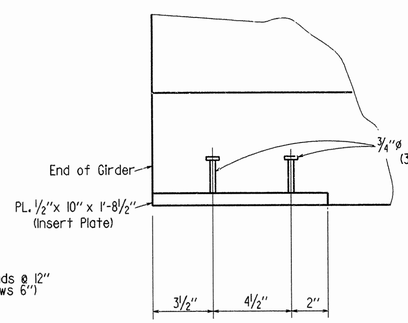

SIDE VIEW

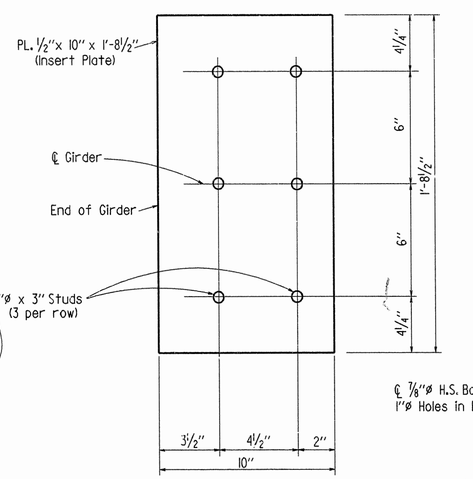

PLAN VIEW

DETAIL A

Scale: 3" = 1'-0"

NOTE: 3/4"ø studs shall be granular flux filled, solid fluxed, or equal, and automatically end welded to insert plates in accordance with manufacturer's recommendations. Studs and insert plates shall be considered subsidiary to the item "Prestressed Concrete Girders."

Note: A standard washer shall be supplied for use under both the nut and the head of the 3/4"ø & 7/8"ø H.S. Bolts. An additional 2 1/2" O.D. washer shall cover the angle slots.

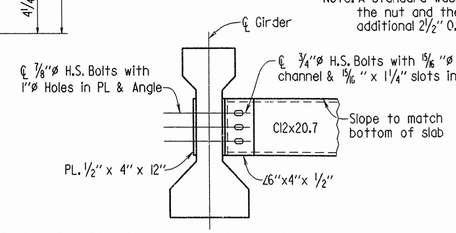

Note: Galvanized Steel Diaphragms may be used in place of Concrete at Intermediate Diaphragms only. All components of the Alternate Steel Diaphragms shall be A36 and shall be galvanized to conform to ASTM A153. No adjustment in quantities or pay will be made for the use of steel diaphragms. Payment will be based on the quantities calculated for concrete diaphragms.

DETAILS OF ALTERNATE STEEL INTERIOR DIAPHRAGMS

Scale: 3/4" = 1'-0"
(Shown at Exterior Girder)

STATE OF ARKANSAS REGISTERED PROFESSIONAL ENGINEER No. 1779 VERAL PINKERTON

BRIDGE ENGINEER

SHEET 2 OF 3
DETAILS OF 70'-0" COMPOSITE PRESTRESSED CONC. GIRDER SPANS

ROUTE 82 SEC. 7
ARKANSAS STATE HIGHWAY COMMISSION
LITTLE ROCK, ARK.

DRAWN BY: KMG DATE: 25 Sept 91
CHECKED BY: WSB DATE: OCT 91 SCALE: As Shown
DESIGNED BY: CSL DATE: Jan 90

BRIDGE NO. 6449-6451 DRAWING NO. 32710

B1588.S12

DATE REVISED	DATE FILMED	DATE REVISED	DATE FILMED	FED. ROAD DIST. NO.	STATE	FED. AID PROJ. NO.	SHEET NO.	TOTAL SHEETS
				6	ARK.			
				JOB NO.		001588	48	170
				(1) 6449-6451		SPAN DTLS.		32711

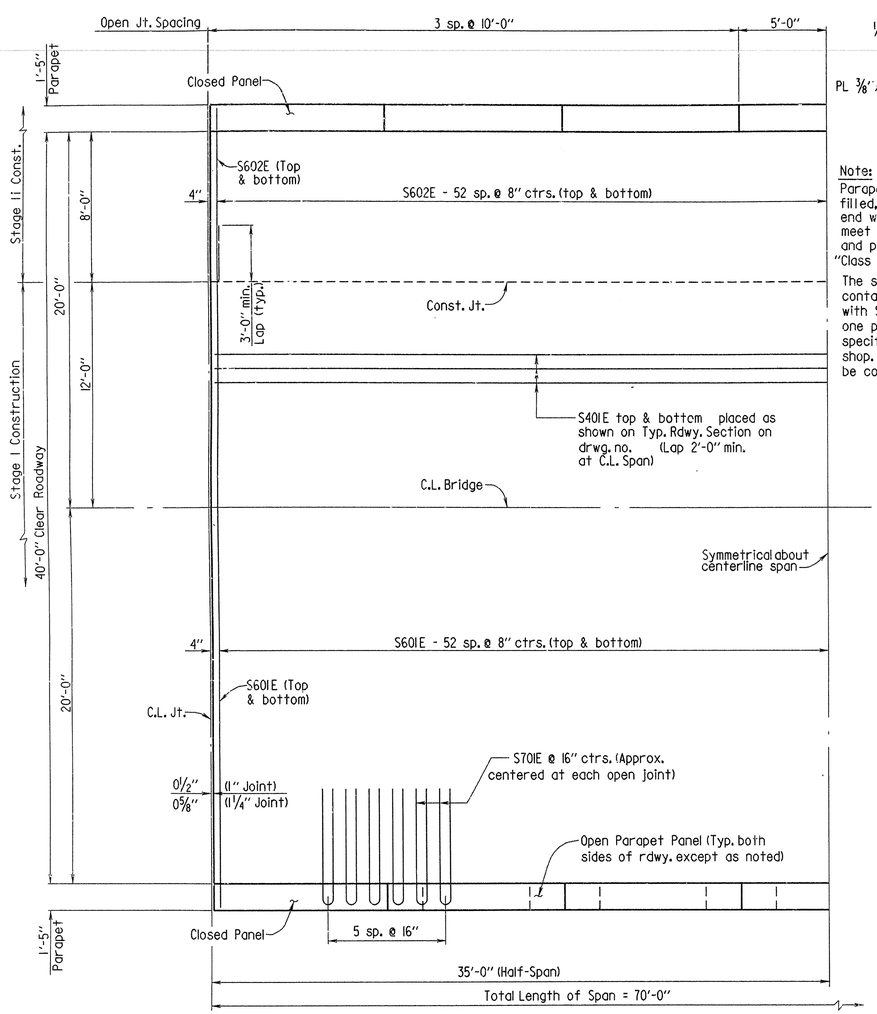

REINFORCING PLAN

Scale: 1/4" = 1'-0"

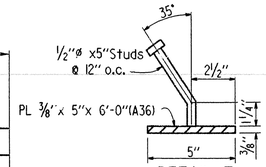

DETAIL Z

N.T.S.

Note:

Parapet Studs shall be 5" long, granular flux filled, solid fluxed, or equal, and automatically end welded to the plate. Studs and plate shall meet the requirements of Section 807. Studs and plate shall be measured and paid for as "Class S(AE) Concrete".

The surfaces of the 3/8" plates which will not be in contact with concrete shall be painted in accordance with Section 638, or as approved by the Engineer. Only one prime coat is required where multiple coats are specified. All coats shall be applied in the fabricator's shop. Painting will not be paid for directly, but will be considered subsidiary to Class S(AE) concrete.

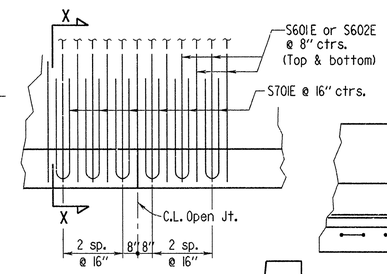

DETAIL B

No Scale

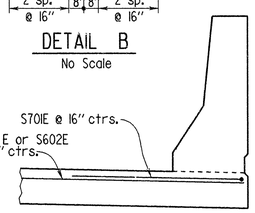

SECTION X-X

No Scale

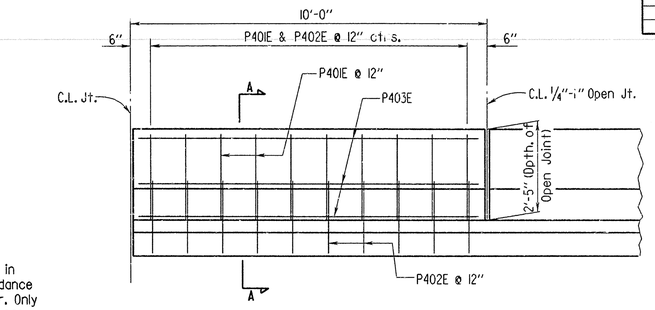

(CLOSED END PANEL)

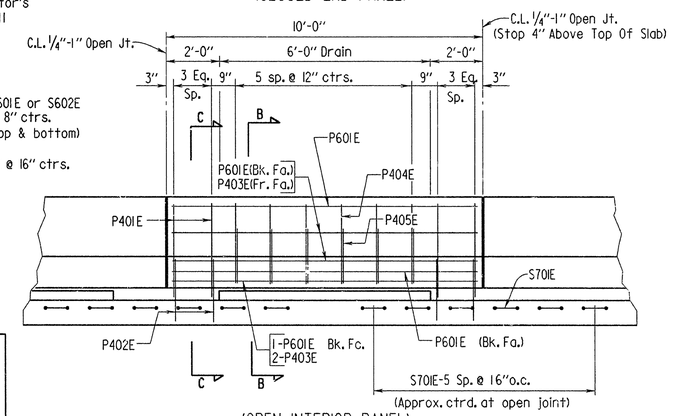

(OPEN INTERIOR PANEL)

DETAILS OF CONCRETE PARAPET RAIL

No Scale

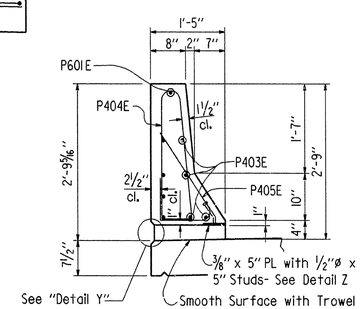

SECTION B-B

3/4" = 1'-0"

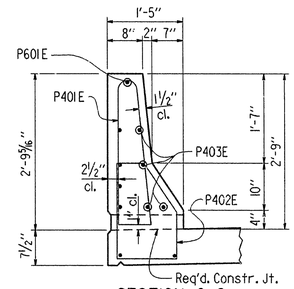

SECTION C-C

3/4" = 1'-0"

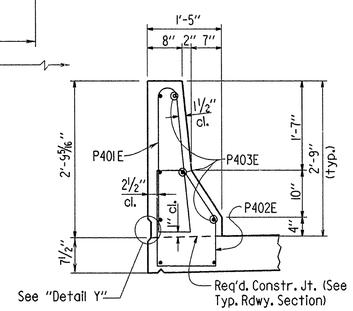

SECTION A-A

3/4" = 1'-0"

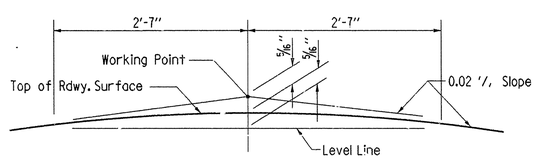

NOTE: Working Point matches Theoretical Roadway Grade.

ROUNDING DETAIL

No Scale

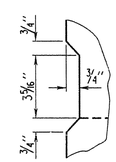

DETAIL Y

No Scale

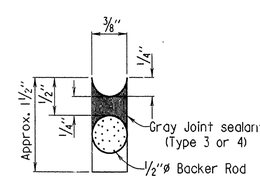

Note: Joint sealant must be gray or other color similar to the color of concrete.

LONGITUDINAL JOINT SEAL

No Scale

Note: Joint sealant and Backer Rod shall be paid for as "Class S(AE) Concrete".

GENERAL NOTES

Concrete for Prestressed Girders shall be Class S and shall have a minimum 28 day compressive strength, f'c = 5000 psi. Concrete in slabs and diaphragms to be Class S(AE) and shall have a 28 day compressive strength, f'c = 4000 psi. All diaphragms shall be cast in place and shall be poured a minimum of 48 hours before the slab is poured. All exposed corners to be chamfered 3/4" unless otherwise noted.

Concrete slabs may be poured in one continuous operation with a strike-off extending over the whole span length. A minimum of 72 hours shall elapse between completion of the slab and the pouring of the concrete parapet railing. Concrete shall be placed and consolidated for the entire pour before any concrete has taken its initial set. This may require the use of a retarding agent.

Movement of the finishing machine across new concrete shall be on planks placed on the surface and shall be prohibited for 72 hours after finishing the pour. Sufficient concrete must be placed ahead of the strike-off to fully load the girder. If a longitudinal strike-off is used, a vertical camber adjustment must be made in the strike-off to account for future dead load deflection due to the railing.

The concrete bridge deck shall be given a fine finish as specified for final finishing in subsection 802.20 for Class 5, Roadway surface finish.

Reinforcing Steel to be ASTM A615 or A617, grade 60 (fy = 60,000 psi). The reinforcing steel is to be accurately located in the forms and firmly held in place by means of steel wire supports, sufficient in number and size to prevent displacement during the course of construction. The wire supports will not be paid for directly but will be subsidiary to the item "Reinforcing Steel".

All structural steel shall be ASTM A588 unless otherwise noted and shall be paid for as "Structural Steel in Beam Spans (A588)" Unless otherwise noted. Structural Steel completely embedded in concrete may be ASTM A36.

A588 Steel shall not be painted and all exposed surfaces are to be cleaned in accordance with 807.67(e) of the Standard Specifications.

Sole Plates shall be ASTM A588 steel and shall not be painted. Sole Plates shall be cleaned in accordance with 807.67(e) of the Standard Specifications.

Sole Plates and Elastomeric Pads shall be paid for under item 808 of the Standard Specifications.

All welding shall conform to subsection 807.24. All welding that is to be done during fabrication of structural steel, including temporary welds, shall be detailed on the shop drawings and submitted for approval.

LOAD DISTRIBUTION TO GIRDER	INT. GIRDER	EXT. GIRDER
Noncomposite Action Dead Load:	1258 PLF	1241 PLF
Composite Action Dead Load:	307 PLF*	354 PLF*
Composite Action Live Load:		

* Includes 160 plf Future Wearing Surface

Live Load (Wheel + Impact)

For Additional Notes, See Dwg. No. 32710.

Drawings show general features of design only. Shop drawings shall be made in accordance with the specifications, submitted and approval secured before fabrication is begun.

BAR LIST - PER SPAN

MARK	NO. REQ'D.	LENGTH	P.D.
S401E	184	35'-10"	Str.
S601E	210	36'-4"	Str.
S602E	210	9'-2"	Str.
S701E	72	13'-1"	7 1/4"
D401	30	7'-7"	2"
D402	60	8'-8"	2"
D601	24	5'-2"	Str.
D602	120	5'-4"	Str.
P401E	120	6'-4"	2"
P402E	120	5'-7"	2"
P403E	64	9'-8"	Str.
P404E	60	5'-10"	2"
P405E	60	3'-2"	2"
P601E	50	9'-8"	Str.

BENDING DIAGRAMS

Dimensions are out to out of bars.

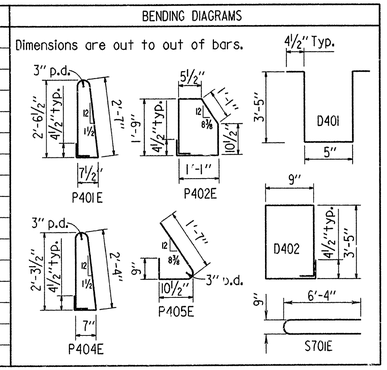

SHEET 3 OF 3

DETAILS OF 70'-0" COMPOSITE PRESTRESSED CONC. GIRDER SPANS

ROUTE 82 SEC. 7

ARKANSAS STATE HIGHWAY COMMISSION

LITTLE ROCK, ARK.

STATE OF ARKANSAS REGISTERED PROFESSIONAL ENGINEER No. 1779 VERNAL PINKERTON

BRIDGE ENGINEER

DRAWN BY: KMG DATE: 26 Sept 91

CHECKED BY: USB DATE: OCT 91

DESIGNED BY: CSL DATE: Jan 90

SCALE: As Shown

BRIDGE NO. 6449-6451 DRAWING NO. 32711

B1588. S13

DATE REVISED	DATE FILMED	DATE REVISED	DATE FILMED	FED. ROAD DIST. NO.	STATE	FED. AID PROJ. NO.	SHEET NO.	TOTAL SHEETS
				6	ARK.			
				JOB NO.		001588	49	170
				(1) 6449-6451		ELAST. BRGS.		32712

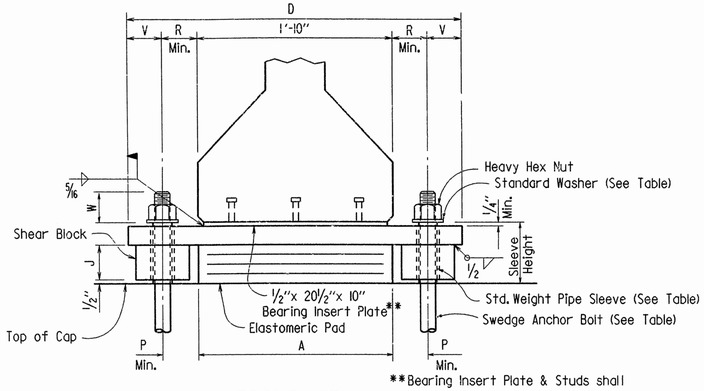

FRONT VIEW

**Bearing Insert Plate & Studs shall be considered subsidiary to the item 'Prestressed Concrete Girders (Type III).' For details, see drwg. no.

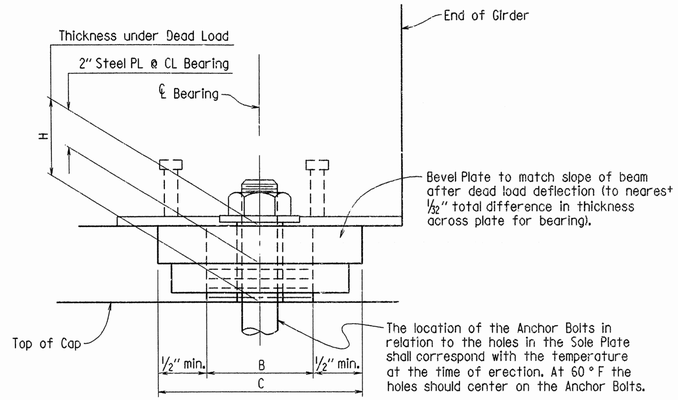

SIDE VIEW

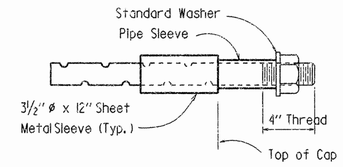

ANCHOR BOLT DETAIL

NOTE: Anchor Bolts may be cast in place or drilled and grouted into place. If Anchor Bolts are to be drilled and grouted into place, the 3 1/2" ø x 12" Galvanized Sheet Metal Sleeve shall be cast in place as shown. It shall be dry packed with styrofoam or urethane foam or approved equal prior to pouring concrete. After pouring of the cap and prior to erection of Prestressed Concrete Girders, the dry pack shall be removed and holes for the anchor bolts shall be accurately drilled into the masonry. The bolts shall then be set and fixed with Portland Cement grout or an approved non-shrink grout, completely filling the holes.

If anchor bolts are to be cast in place, the 3 1/2" ø Galvanized Sheet Metal Sleeve will not be required. Galvanized Sheet Metal Sleeves are to be considered subsidiary to the item "Structural Steel in Beam Spans (A588)."

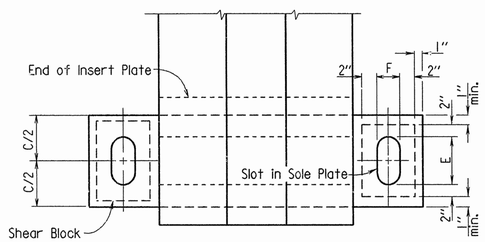

PLAN VIEW

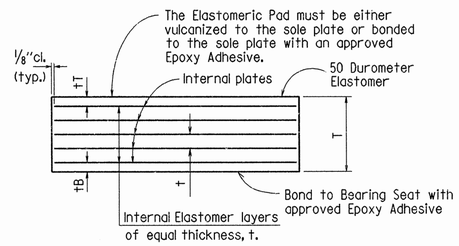

ELASTOMERIC PAD

TABLE OF ANCHOR BOLT VARIABLES

ANCHOR BOLT DIAMETER	PIPE SLEEVE NOMINAL DIAMETER	STANDARD WASHER SIZE (O.D.)	MINIMUM EMBEDMENT LENGTH	SLOT WIDTH "F"	P Min.	R Min.	V	W
1"	1 1/4"	2 1/2"	10"	2" ø	4"	2"	4"	1 1/2"
1 1/4"	1 1/4"	3"	12"	2" ø	4"	2 1/4"	4"	1 3/4"
1 1/2"	1 1/2"	3 1/2"	15"	2 1/4" ø	4 1/8"	2 1/2"	4 1/8"	2"
1 3/4"	2"	4"	18"	2 5/8" ø	4 5/16"	2 3/4"	4 7/16"	2 1/4"
2"	2 1/2"	4 1/2"	20"	3 1/8" ø	4 9/16"	3"	4 11/16"	2 1/2"
2 1/4"	2 1/2"	4 3/4"	23"	3 1/8" ø	4 9/16"	3"	4 11/16"	2 3/4"
2 1/2"	3"	5"	25"	3 3/4" ø	4 7/8"	3 1/4"	4 7/8"	3"

GENERAL NOTES

Pipe Sleeves shall be ASTM A53, Grade B, and shall be galvanized to conform to ASTM A153. Sleeves shall be paid for at the unit price bid for "Structural Steel in Beam Spans (A588)."

Anchor Bolts, Nuts and Washers shall be ASTM A36 Steel Galvanized to conform to ASTM A153 and shall be paid for at the unit price bid for "Structural Steel in Beam Spans (A588)."

Sole Plates & Shear Blocks shall be ASTM A588 Steel. Sole plates & Shear blocks will not be paid for directly, but will be considered as part of the item "Elastomeric Bearings."

Sole Plates & Shear Blocks shall not be painted. A588 Sole Plates and Shear Blocks shall be cleaned in accordance with Section 807.67(e) of the Standard Specifications.

Elastomeric Pads shall conform to Section 808 of the Standard Specifications and shall be paid for at the unit price bid for "Elastomeric Bearings."

Internal plates shall have a minimum yield strength of 25,000 psi.

TABLE OF VARIABLES

BRIDGE NO.	SPAN	LOCATION	BEARING TYPE	NO. of BRGS. EACH BENT	H	A	B	T	tT	tB	NO. & THICKNESS FOR (t)	NO. & THICKNESS OF INTERNAL PL	C	D	E	J	ANCHOR BOLT SIZE	SLEEVE HEIGHT
6449	70' Span	Bts. 1,3,4,5	Fixed	6	3 1/8"	22"	5 1/2"	1 1/8"	1/8"	1/8"	3 @ 3/16"	4 @ 14 ga.	8"	38"	2"	5/8"	1 1/4"ø x 25"	3 3/8"
	70' Span	Bt. 2	Exp.	12	3 1/8"	22"	5 1/2"	1 1/8"	1/8"	1/8"	3 @ 3/16"	4 @ 14 ga.	9 1/2"	38"	3 1/2"	5/8"	1 1/4"ø x 25"	3 3/8"
	70' Span	Bts. 3,4	Exp.	6	3 1/8"	22"	5 1/2"	1 1/8"	1/8"	1/8"	3 @ 3/16"	4 @ 14 ga.	9 1/2"	38"	3 1/2"	5/8"	1 1/4"ø x 25"	3 3/8"
6450	70' Span	Bts. 1-6, 8	Fixed	6	3 1/8"	22"	5 1/2"	1 1/8"	1/8"	1/8"	3 @ 3/16"	4 @ 14 ga.	8"	38"	2"	5/8"	1 1/4"ø x 25"	3 3/8"
	70' Span	Bts. 2-6	Exp.	6	3 1/8"	22"	5 1/2"	1 1/8"	1/8"	1/8"	3 @ 3/16"	4 @ 14 ga.	9 1/2"	38"	3 1/2"	5/8"	1 1/4"ø x 25"	3 3/8"
	70' Span	Bt. 7	Exp.	12	3 1/8"	22"	5 1/2"	1 1/8"	1/8"	1/8"	3 @ 3/16"	4 @ 14 ga.	9 1/2"	38"	3 1/2"	5/8"	1 1/4"ø x 25"	3 3/8"
6451	70' Span	Bts. 1,3,4,5,6	Fixed	6	3 1/8"	22"	5 1/2"	1 1/8"	1/8"	1/8"	3 @ 3/16"	4 @ 14 ga.	8"	38"	2"	5/8"	1 1/4"ø x 25"	3 3/8"
	70' Span	Bt. 2	Exp.	12	3 1/8"	22"	5 1/2"	1 1/8"	1/8"	1/8"	3 @ 3/16"	4 @ 14 ga.	9 1/2"	38"	3 1/2"	5/8"	1 1/4"ø x 25"	3 3/8"
	70' Span	Bts. 3,4,5	Exp.	6	3 1/8"	22"	5 1/2"	1 1/8"	1/8"	1/8"	3 @ 3/16"	4 @ 14 ga.	9 1/2"	38"	3 1/2"	5/8"	1 1/4"ø x 25"	3 3/8"

Tabular Data by: KMG Date: 2 Oct 91
Checked by: LSB Date: Oct. 91

STATE OF ARKANSAS
REGISTERED PROFESSIONAL ENGINEER
No. 1779
VERAL PINNERTON

BRIDGE ENGINEER

DETAILS OF ELASTOMERIC FIXED AND EXPANSION BEARINGS FOR PRESTRESSED CONCRETE GIRDERS

ROUTE 82 SEC. 7

ARKANSAS STATE HIGHWAY COMMISSION

LITTLE ROCK, ARK.

DRAWN BY: KMG DATE: 2 Oct 91
CHECKED BY: LSB DATE: Oct. 91 SCALE: None
DESIGNED BY: CSL DATE: Jan 90

BRIDGE NO. 6449-6451 DRAWING NO. 32712

B1588.EB1

DATE REVISED	DATE FILMED	DATE REVISED	DATE FILMED	FED. ROAD DIST. NO.	STATE	FED. AID PROJ. NO.	SHEET NO.	TOTAL SHEETS
				6	ARK.			
				JOB NO.		001588	50	170
				(1) 6450		LAYOUT		32713

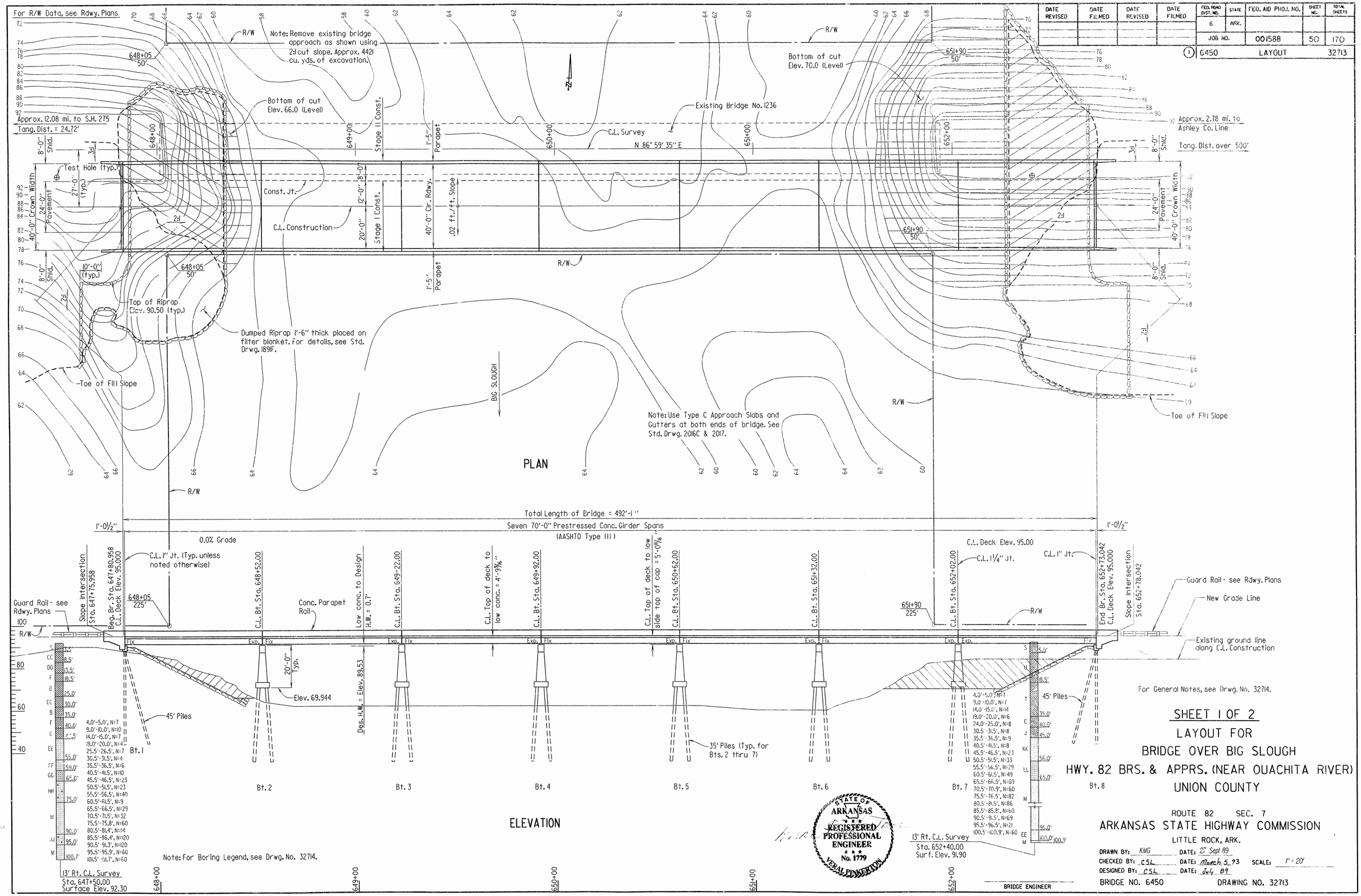

For General Notes, see Drwg. No. 32714.

SHEET 1 OF 2

LAYOUT FOR
BRIDGE OVER BIG SLOUGH
HWY. 82 BRS. & APPRS. (NEAR OUACHITA RIVER)
UNION COUNTY

ROUTE 82 SEC. 7

ARKANSAS STATE HIGHWAY COMMISSION
LITTLE ROCK, ARK.

DRAWN BY: KMG DATE: 27 Sept 89
CHECKED BY: CSL DATE: March 5 93 SCALE: 1" = 20'
DESIGNED BY: CSL DATE: July 89

BRIDGE NO. 6450 DRAWING NO. 32713

B1588X2.L1

DATE REVISED	DATE FILMED	DATE REVISED	DATE FILMED	FED. ROAD DIST. NO.	STATE	FED. AID PROJ. NO.	SHEET NO.	TOTAL SHEETS
				6	ARK.			
				JOB NO.		001588	51	170
				(1) 6450		LAYOUT		32714

GENERAL NOTES

BENCH MARK: Std. Disk 14' Lt. of C.L. Survey Sta. 648+04.00. Elev. 92.979.

CONSTRUCTION SPECIFICATIONS: Arkansas State Highway and Transportation Department Standard Specifications for Highway Construction, 1993 edition, with applicable supplemental specifications and special provisions.

DESIGN SPECIFICATIONS: AASHTO Standard Specifications for Highway Bridges, 1992 with current interim specifications.

LIVE LOADING: HS20 METHOD OF DESIGN: Load Factor
SEISMIC PERFORMANCE CATEGORY: A

MATERIALS AND STRENGTHS:

Superstructure Concrete (Deck)	f'c = 4,000 psi
Superstructure Concrete (Girders)	f'c = 5,000 psi
Substructure Concrete (Class S)	f'c = 3,500 psi
Reinforcing Steel (A615 or A617, GR. 60)	Fy = 60,000 psi

BORING LOGS: Boring logs may be obtained from the Programs and Contracts Division.

CONCRETE PILING:
End Bents _ Piling shall be 16'' octagonal or 14'' square precast concrete, shall have a minimum penetration of 20' below the natural ground line, and shall be driven to a minimum ultimate bearing capacity of 135 tons per pile. Piling shall be driven after embankment to bottom of cap is in place. Pile shapes shall not be mixed. Drive one 55' test pile in bent 1. Design capacity of piles = 54 tons per pile.

Int. Bents _ Piling for bents 2 thru 7 shall be 18'' square precast concrete, shall have a minimum penetration of 25' below the natural ground line, and shall be driven to a minimum ultimate bearing capacity of 300 tons per pile. Drive one 45' test pile in bent 3 and one 45' test pile in bent 6. Design capacity of piles = 120 tons per pile.

Bents 1 thru 8 _ Bearing values shall be determined as specified for 'Method C - Dynamic Load Test' in the standard specifications. For special requirements for hammer and driving equipment see subsection 805.03.

Pile lengths shown are for estimating and bid comparison purposes only. Actual lengths to be determined in the field.

BRIDGE DECK: The concrete bridge deck shall be given a tine finish as specified for final finishing in subsection 802.20 for Class S Bridge Roadway Surface Finish.

BOILED LINSEED OIL: Boiled linseed oil treatment shall be applied to the roadway surface and to the face and top of the concrete parapet rail.

DETAIL DRAWINGS:	DRAWING NO.
Bents	32706-32708
70' Prestressed Conc. Girder Spans	32709-32712
Concrete Piling	2383
Type C Bridge Name Plate	2389A
Embankment Construction	1888A
Dumped Riprap and Filter Blanket	1891F
Computing Excavation for Structures	1891F
Approach Slabs and Gutters	2016C & 2017

EXISTING BRIDGE: The existing bridge No. 1236 (log mile 12.08) is 28' wide and 386' long and consists of a RCDG superstructure supported by a concrete substructure. The existing bridge is located approximately 27 feet upstream from the proposed new bridge.

REMOVAL AND SALVAGE: After the new bridge is open to traffic the existing bridge (1236) shall be removed in accordance with section 205 of the Standard Specifications. All material from the existing bridge shall become the property of the contractor.

HYDRAULIC DATA

Ouachita River
Drainage Area = 10568 sq. mi.

FLOOD	FREQ.	DISCHARGE	NATURAL WATER SURFACE ELEV.*	WATER SURFACE ELEV. WITH BACKWATER
				PLANS
DESCRIPTION	YEARS	CFS	FEET	FEET
DESIGN	50	18236	89.53	89.73
OVERTOPPING	>500	-	-	-
BASE	100	18355	89.72	89.93
EXTREME	500	18581	90.22	90.42

Remarks:

* Unconstricted water surface at proposed bridge location without structure and roadway approaches.
- No overtopping of roadway approaches occurs.
- Low bridge member elevation = 90.20
- Design water surface elevation at bridge = Elev. 89.53

Normal Pool Elevation for Ouachita River :
= 65.0 Ft.
= 70.0 Ft. (During Waterfowl Season)

BORING LEGEND

A _ Moist, loose sandy silt with gravel and clay
B _ Moist, soft sandy clay
C _ Moist, stiff sandy clay
D _ Moist, med. stiff-soft sandy clay
E _ Wet, soft sandy clay
F _ Wet, med. stiff sandy clay
G _ Wet, loose sand with clay
H _ Wet, med. dense sand with organic matter
J _ Wet, med. dense sand with clay seams
K _ Wet, dense sand with clay seams and organic matter
L _ Wet, very dense sand with organic matter
M _ Wet, very dense sand
N _ Wet, dense sand with cemented sand seams and organic matter
P _ Moist, hard sandy clay with cemented sand seams
Q _ Hard cemented sand
R _ Moist, very hard-hard sandy clay with cemented sand seams
S _ Moist, med. stiff sandy clay with gravel
T _ Moist, med. stiff sandy clay
U _ Moist, med. stiff-stiff sandy clay
V _ Wet, med. dense sand with gravel
W _ Moist, stiff sandy clay with gravel
X _ Wet, med. dense sand with clay and organic matter
Y _ Wet, dense sand with organic matter
Z _ Wet, very dense sand with organic matter and cemented sand seams
AA _ Moist, very stiff sandy clay
BB _ Moist, hard clay with sand seams
CC _ Moist, med. stiff clay
DD _ Moist, stiff clay
EE _ Wet, med. dense sand
FF _ Wet, dense sand
GG _ Wet, loose sand and gravel
HH _ Wet, med. dense-dense sand with organic matter
JJ _ Wet, very dense sand with organic matter and clay
KK _ Wet, med. dense-dense sand
LL _ Wet, dense sand and gravel
MM _ Wet, very loose sand with clay and organic matter
NN _ Wet, dense sand with gravel, clay, and organic matter
PP _ Moist, hard clay with silt and sand
QQ _ Moist, very loose clayey sand
RR _ Wet, very loose clayey sand
SS _ Wet, loose sand
TT _ Wet, med. dense sand and gravel
UU _ Moist, very stiff clay with sand and traces of lignite
VV _ Wet, dense sand with clay and traces of lignite
WW _ Wet, very dense sand with traces of lignite
XX _ Wet, med. dense sand and gravel with traces of lignite
YY _ Moist, hard clay with sand and traces of lignite
ZZ _ Moist, very dens[illegible] with clay seams
AAA _ Moist, very hard cl[illegible]th sand and lignite seams
BBB _ Moist, med. stiff-s[illegible]dy, silty clay with gravel
CCC _ Wet, med. dense clayey [illegible]d
DDD _ Moist, very stiff sandy clay with traces of lignite
EEE _ Moist, very hard clay with sand
FFF _ Moist, soft sandy, silty clay
GGG _ Moist, soft sandy, silty clay with organic matter
HHH _ Moist, very stiff sandy, silty clay with traces of lignite
JJJ _ Wet, dense sand with clay seams
KKK _ Moist, very dense sand with lignite seams
LLL _ Moist, very dense sand
MMM _ Moist. med. stiff sandy, silty clay with gravel
NNN _ Moist, med. stiff sandy, silty clay
PPP _ Moist, very soft sandy clay
QQQ _ Moist, stiff sandy, silty clay
RRR _ Wet, loose sand with organic matter
SSS _ Wet, loose-med. dense sand with gravel
TTT _ Wet, loose sand and gravel with clay
UUU _ Moist, med. dense clayey sand
VVV _ Moist, very stiff-hard sandy, silty clay with traces of lignite
WWW _ Moist, very stiff-hard clay with silt and sand lenses
XXX _ Moist, very hard clay with silt and sand lenses

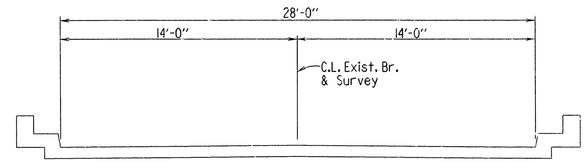

(EXISTING BRIDGE STRUCTURE)

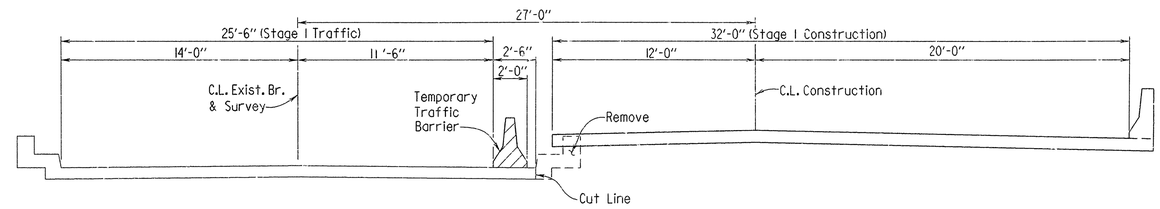

(STAGE I CONSTRUCTION)

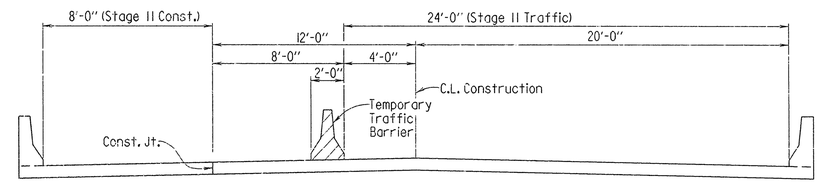

(STAGE II CONSTRUCTION)

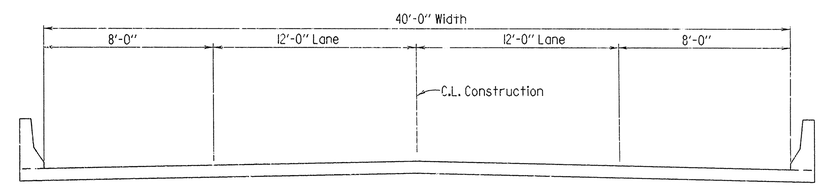

(FINAL CONSTRUCTION)

SKETCH SHOWING STAGE CONSTRUCTION

No Scale

Note: All sections taken looking ahead.

SHEET 2 OF 2

LAYOUT FOR BRIDGE OVER BIG SLOUGH HWY. 82 BRS. & APPRS. (NEAR OUACHITA RIVER) UNION COUNTY

STATE OF ARKANSAS REGISTERED PROFESSIONAL ENGINEER No. 1779 VERAL PINKERTON

BRIDGE ENGINEER

ROUTE 82 SEC. 7

ARKANSAS STATE HIGHWAY COMMISSION

LITTLE ROCK, ARK.

DRAWN BY: KMG DATE: 27 Sept 89
CHECKED BY: CSL DATE: Jan. 93 SCALE: None
DESIGNED BY: CSL DATE: Jan 91

BRIDGE NO. 6450 DRAWING NO. 32714

B1588X2.L2