DATE REVISED	DATE FILMED	DATE REVISED	DATE FILMED	FED. ROAD DIST. NO.	STATE	FED. AID PROJ. NO.	SHEET NO.	TOTAL SHEETS
				6	ARK.			
				JOB NO.		2980	6	59
				(1) 6140-6145		QUANT.	27598	

SCHEDULE OF BRIDGE QUANTITIES — JOB 2980

BRIDGE NO. / CODE NO. / NAME PLATE TITLE	UNIT OF STRUCTURE	ITEM NO.	205	801	SP & 802	* SP & 802	803	804	** SP & 805	*** SP & 805	812	SP & 816	SP & 816	SP & 603
		ITEM	REMOVAL OF EXISTING BRIDGE STRUCTURES	COMMON EXCAVATION FOR STRUCTURES-BRIDGE	CLASS S CONCRETE	CLASS S(AE) CONCRETE	BOILED LINSEED OIL	REINFORCING STEEL (GRADE 60)	PRECAST CONCRETE PILING (16" OCT. or 16" SQ.)	TEST PILES (16" OCT. or 16" SQ.)	BRIDGE NAME PLATES (TYPE "C")	DUMPED RIPRAP	FILTER BLANKET	TEMPORARY BRIDGE STRUCTURES
		UNIT	LUMP SUM	CU. YD.	CU. YD.	CU. YD.	GAL.	LB.	LIN. FT.	LIN. FT.	EACH	CU. YD.	SQ. YD.	LUMP SUM
6140 / X020 / HUDGINS CREEK RELIEF	BENT 1			15	9.03			1165	140			55	110	
	BENT 2				6.92			1009	200	45				
	BENT 3				6.92			974	240					
	BENT 4			15	9.03			1165	140			55	110	
	SPAN 1 & 3					152.60	5.8	22754			1.0			
	SPAN 2					75.80	2.9	11293						
TOTALS FOR BRIDGE NO. 6140			0.10	30	31.9	228.4	8.7	38360	720	45	1.0	110	220	0.20
6141 / X020 / HUDGINS CREEK	BENT 1				9.01			1165	160			215	430	
	BENT 2				6.92			974	225	50				
	BENT 3				6.92			1009	270					
	BENT 4				6.92			974	270					
	BENT 5				6.92			974	225	50				
	BENT 6			14	9.01			1165	160			175	350	
	SPAN 1 & 5					152.62	5.8	22754			1.0			
	SPAN 2, 3 & 4					227.48	8.7	33895						
TOTALS FOR BRIDGE NO. 6141			0.23	14	45.7	380.1	14.5	62910	1310	100	1.0	390	780	0.27
6142 / X020 / HUDGINS CR. RELIEF	BENT 1			12	8.88			1158	140			176	352	
	BENT 2				6.92			974	160	45				
	BENT 3				6.92			1009	200					
	BENT 4			13	8.88			1158	140			147	294	
	SPAN 1 & 3					86.52	4.2	13650			1.0			
	SPAN 2					42.98	2.1	6731						
TOTALS FOR BRIDGE NO. 6142			0.16	25	31.6	129.5	6.3	24680	640	45	1.0	323	646	0.10
6143 / X020 / HUNDLEY CREEK	BENT 1			14	9.03			1165	160			158	316	
	BENT 2				6.88			974	160	45				
	BENT 3				6.88			1009	200					
	BENT 4				6.88			974	160	45				
	BENT 5			11	9.03			1165	160			102	204	
	SPAN 1 & 4					115.9	5.0	19238			1.0			
	SPAN 2 & 3					115.8	5.0	19095						
TOTALS FOR BRIDGE NO. 6143			0.16	25	38.7	231.7	10.0	43620	840	90	1.0	260	520	0.20
6144 / X020 / HUNDLEY CR. RELIEF	BENT 1			11	8.88			1158	160			174	348	
	BENT 2				6.92			974	160	45				
	BENT 3				6.92			1009	200					
	BENT 4			11	8.88			1158	160			145	290	
	SPAN 1 & 3					86.52	4.2	13650			1.0			
	SPAN 2					42.98	2.1	6731						
TOTALS FOR BRIDGE NO. 6144			0.08	22	31.6	129.5	6.3	24680	680	45	1.0	319	638	0.10
6145 / X020 / HUNGERRUN CREEK	BENT 1			13	9.02			1165	160			124	248	
	BENT 2				6.92			974	200	45				
	BENT 3				6.92			1009	240					
	BENT 4				6.92			974	200	45				
	BENT 5			13	9.02			1165	160			140	280	
	SPAN 1 & 4					152.62	5.8	22753			1.0			
	SPAN 2 & 3					151.68	5.8	25590						
TOTALS FOR BRIDGE NO. 6145			0.27	26	38.8	304.3	11.6	53630	960	90	1.0	264	528	0.13
TOTALS FOR JOB NO. 2980			1.0	142	218.3	1403.5	57.4	247880	5150	415	6.0	1666	3332	1.0

* Refers to SP 807-10
** Refers to SP 802-5
*** Refers to SP 802-5, SP 805-2

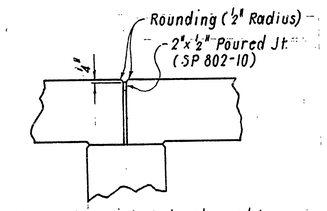

Note: All Joints to be cleaned by sand blasting or other approved methods before pouring joint.

JOINT DETAIL
N.T.S.

DALE F. LOE
DESIGN SQUAD SUPERVISOR

SCHEDULE OF BRIDGE QUANTITIES
CLEVELAND CO. LINE — MONTICELLO
BRIDGE & APPRS.
DREW COUNTY
ROUTE 35 SEC. 7

ARKANSAS STATE HIGHWAY COMMISSION
LITTLE ROCK, ARK.

DRAWN BY: MRJ DATE: 6-18-85
CHECKED BY: DFL DATE: 7-2-85
DESIGNED BY: DATE:
SCALE: NONE

Fred Pinkerton
BRIDGE ENGINEER

BRIDGE NO. 6140-6145 DRAWING NO. 27598

DATE REVISED	DATE FILMED	DATE REVISED	DATE FILMED	FED. ROAD NO.	STATE	FED. AID PROJ. NO.	SHEET NO.	TOTAL SHEETS
				6	ARK.			
				JOB NO.		2980	22	59

(1) 5142 LAYOUT 27603

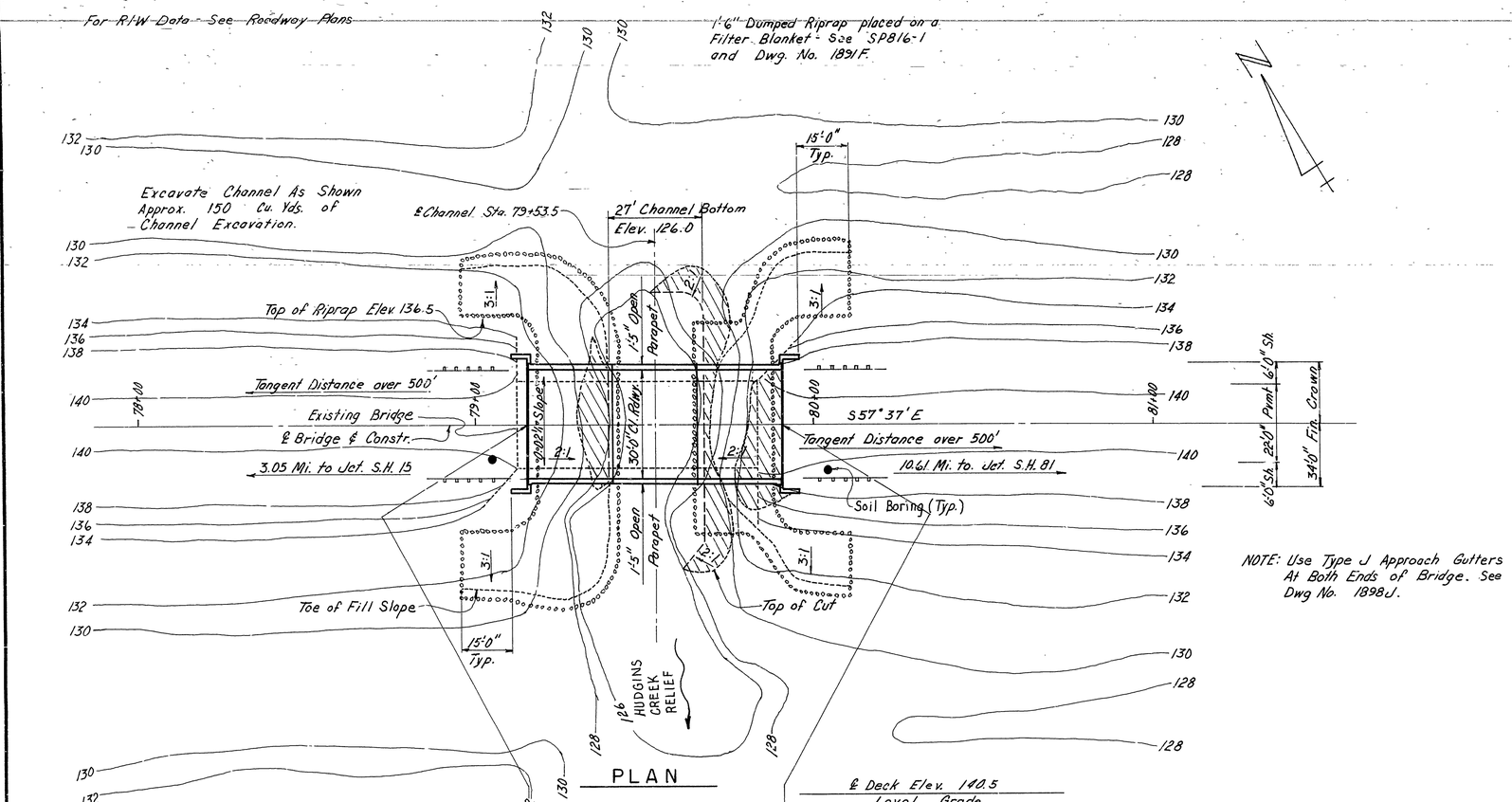

GENERAL NOTES

BENCH MARK: "□" CUT IN HUB RAIL 12' RT. STA. 79+65, ELEV. 140.67.

CONSTRUCTION SPECIFICATIONS: ARKANSAS STATE HIGHWAY COMMISSION STANDARD SPECIFICATIONS FOR HIGHWAY CONSTRUCTION, EDITION OF 1978 AND APPLICABLE SPECIAL PROVISIONS.

DESIGN SPECIFICATIONS: AASHTO STANDARD SPECIFICATIONS FOR HIGHWAY BRIDGES, 1983 WITH CURRENT INTERIM SPECIFICATIONS.

LIVE LOADING: HS20

METHOD OF DESIGN: LOAD FACTOR

DETAIL DRAWINGS:	DRAWING NO.
END BENTS	27604
INTERMEDIATE BENTS	27604
SPANS	27605
EXCAVATION FOR STRUCTURES	1891F
EMBANKMENT CONSTRUCTION	1888A
GUARD RAIL CONNECTION	GR-8A
TYPE C BRIDGE NAME PLATES	2398A
TYPE J APPROACH GUTTERS	1898J
TEMPORARY BRIDGE STRUCTURES	2391 & 2392
PRECAST CONCRETE PILING	2383

CONCRETE PILING: PILING FOR BENTS 1-4 SHALL BE 16" OCT. OR 16" SQ. PRECAST CONCRETE AND SHALL BE DRIVEN WITH AN APPROVED AIR, STEAM, OR DIESEL HAMMER TO A MINIMUM BEARING CAPACITY OF 44 TONS PER PILE AND TO A MINIMUM PENETRATION OF 20' BELOW NATURAL GROUND. LENGTHS OF PILING SHOWN ARE ASSUMED FOR ESTIMATING QUANTITIES ONLY. ACTUAL LENGTH TO BE DETERMINED IN THE FIELD. DRIVE ONE 45' TEST PILE IN BENT 2. PILES IN END BENTS TO BE DRIVEN AFTER EMBANKMENT TO BOTTOM OF CAP IS IN PLACE. PILE SHAPES SHALL NOT BE MIXED ON ANY BRIDGE.

EXISTING BRIDGE: REMOVE THE TWO EXISTING 24' BY 59' BRIDGES NO. 1656 & 1657. THE SUPERSTRUCTURES CONSIST OF CONCRETE DECKS WITH TIMBER STRINGERS. THE SUBSTRUCTURES CONSIST OF TIMBER PILE BENTS AND TIMBER ABUTMENTS. ALL EXISTING BRIDGE MATERIAL SHALL BECOME THE PROPERTY OF THE CONTRACTOR. SEE SECTION 205 OF THE STANDARD SPECIFICATIONS.

TEMPORARY BRIDGE: CONSTRUCT A 48' LONG TEMPORARY BRIDGE APPROXIMATELY 40' DOWNSTREAM. THE TEMPORARY BRIDGE SHALL HAVE A MINIMUM ROADWAY WIDTH OF 20 FT., A MINIMUM LIVE LOAD CAPACITY OF H15 AND A MINIMUM DECK ELEVATION OF 135.4 FT. SEE SECTION 603 OF THE STANDARD SPECIFICATIONS. SEE SP 603-3. IF TIMBER PILING AND PINE TIMBER ARE USED ON THIS TEMPORARY BRIDGE STRUCTURE, THE MATERIALS SHALL BE TREATED WITH A PRESERVATIVE ACCORDING TO THE STANDARD SPECIFICATIONS.

BOILED LINSEED OIL: BOILED LINSEED OIL TREATMENT SHALL BE APPLIED TO THE ROADWAY SURFACE AND FACE AND TOP OF THE CONCRETE PARAPET RAIL.

BRIDGE DECK: THE CONCRETE BRIDGE DECK SHALL BE GIVEN A TINE FINISH AS SPECIFIED FOR FINAL FINISHING IN SUBSECTION 802.23 FOR CLASS 6 ROADWAY SURFACE FINISH.

BORING LEGEND

A. MOIST, SOFT, BROWN SILTY CLAY WITH ORGANIC MATTER.
B. MOIST, SOFT, BROWN SANDY, SILTY CLAY.
C. MOIST, MEDIUM STIFF, BROWN AND GRAY SILTY, SANDY CLAY.
D. WET, VERY LOOSE, BROWN AND GRAY CLAYEY SAND.
E. WET, MEDIUM DENSE, BROWN AND GRAY SAND AND GRAVEL.
F. MOIST, VERY STIFF, GRAY CLAY WITH SILT AND SAND LENSES.
G. MOIST, VERY STIFF, GRAY FOSSILIFEROUS CLAY WITH SILT AND SAND LENSES.
I. MOIST, MEDIUM STIFF, BROWN SILTY, SANDY CLAY WITH ORGANIC MATTER.
J. MOIST, STIFF, BROWN SANDY, SILTY CLAY WITH SOME GRAVEL.
K. WET, LOOSE, BROWN SILTY SAND.
L. WET, MEDIUM DENSE, BROWN SAND AND GRAVEL.

DESIGN DATA

Bridge No. 6140, Bridge No. 6141, and Bridge No. 6142 were designed to provide a total waterway area approximately equal to the waterway area of the four existing Bridges. The Q50 discharge was not used to design the waterway opening.

HYDROLOGIC DATA

Q50 = 12500 c.f.s.
Normal W.S. Elev. 135.4
Q100 = 14300 c.f.s.
Normal W.S. Elev. 135.8

DA = 172 SQ. MI. *

*Area includes three Bridge Sites.

LAYOUT OF BRIDGE OVER
HUDGINS CREEK RELIEF STA. 79+00
CLEVELAND CO. LINE - MONTICELLO
BRIDGE & APPRS.
DREW COUNTY
ROUTE 35 SEC. 7

ARKANSAS STATE HIGHWAY COMMISSION
LITTLE ROCK, ARK.

DRAWN BY: MRJ DATE: 5-30-85
CHECKED BY: DFL DATE: 7-2-85
DESIGNED BY: DFL DATE: 5-30-85
SCALE: 1" = 20'

Feral Pinkerton
BRIDGE ENGINEER

BRIDGE NO. 6142 DRAWING NO. 27603

DATE REVISED	DATE FILMED	DATE REVISED	DATE FILMED	FED. ROAD NO.	STATE	FED. AID PROJ. NO.	SHEET NO.	TOTAL SHEETS
				6	ARK.			
				JOB NO		2980	23	59
				(1) 6142 & 6144 BT. DTL'S			27604	

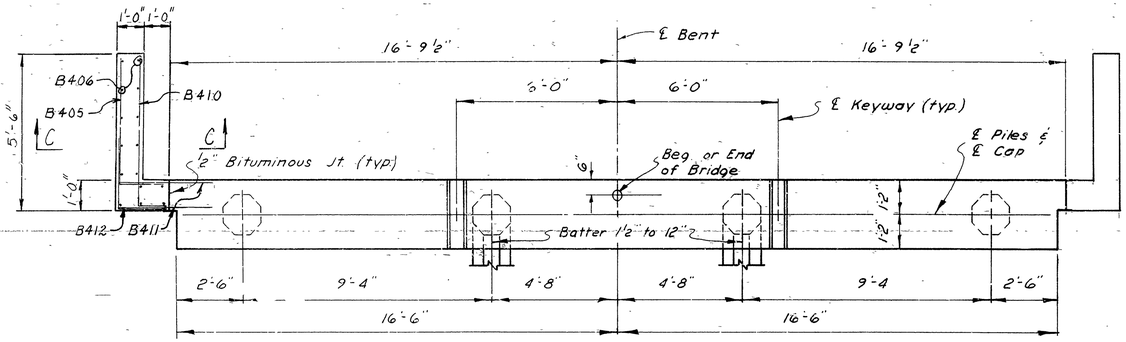

PLAN OF END BENT

Scale: ⅜" = 1'-0"

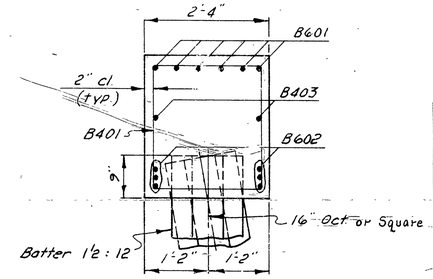

SECTION A-A

Scale: ¾" = 1'-0"

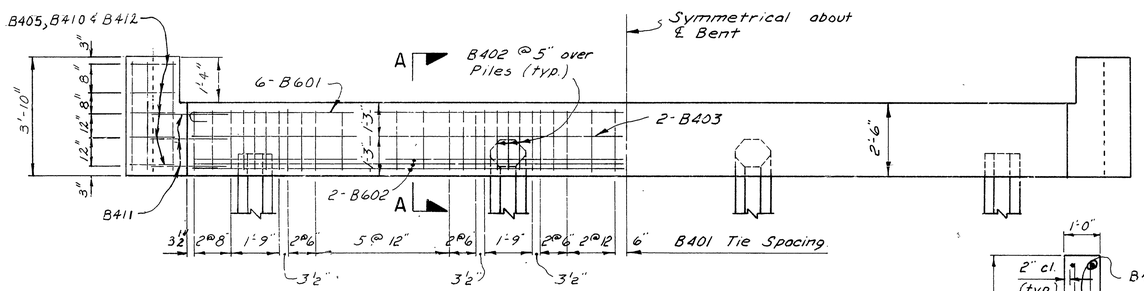

ELEVATION OF END BENT

Scale: ⅜" = 1'-0"

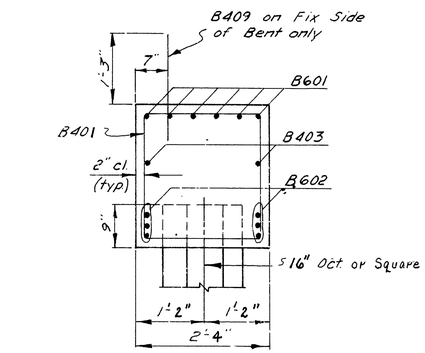

SECTION B-B

Scale: ¾" = 1'-0"

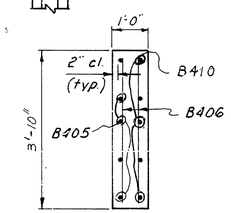

SECTION C-C

Scale: ½" = 1'-0"

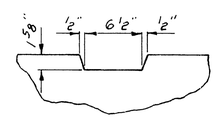

KEYWAY DETAIL

Scale: 1½" = 1'-0"

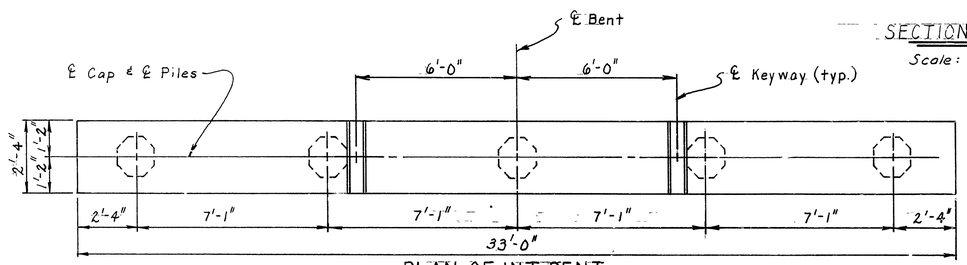

PLAN OF INT. BENT

Scale: ⅜" = 1'-0"

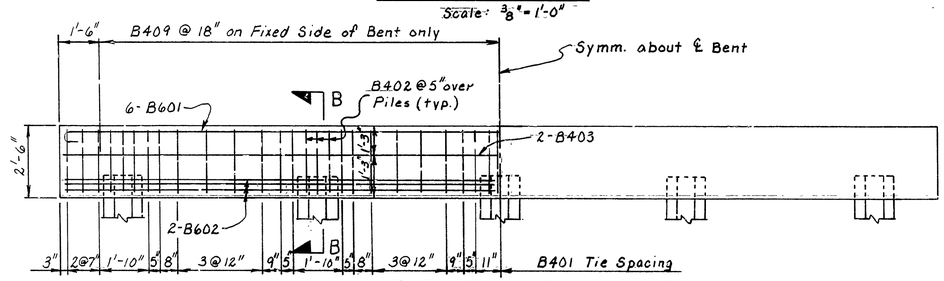

ELEVATION OF INT. BENT

Scale: ⅜" = 1'-0"

BAR LIST (EACH BENT)

MARK	NO. REQ'D END	NO. REQ'D INT.	LENGTH	A	B	PIN DIA.
B401	42	38	9'-2"	2'-0"	2'-2"	2"
B402	12	15	6'-2"	2'-0"	2'-2"	2"
B403	2	2	32'-8"			Str.
B405	10		6'-1"	4'-6"	1'-8"	2"
B406	30		3'-6"			Str.
B409		*	2'-6"			Str.
B601	6	6	34'-0"	32'-8"	6"	4½"
B602	6	6	32'-8"			Str.
B410	10		6'-1"	5'-2"	1'-0"	2"
B411	12		3'-6"			Str.
B412	10		4'-1"	2'-6"	1'-8"	2"

BENDING DIAGRAMS

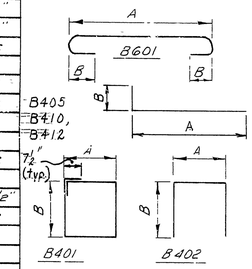

Dimensions are out to out of Bars.

* 21 Required For Fix-Exp. Bent
* 42 Required For Fix.-Fix Bent

GENERAL NOTES

ALL CONCRETE TO BE CLASS "S" AND SHALL BE POURED IN THE DRY. ALL EXPOSED CORNERS TO BE CHAMFERED 3/4" UNLESS OTHERWISE NOTED.

REINFORCING STEEL TO BE ASTM A615 OR A617, GRADE 60.

ALL PILING IN END BENTS SHALL BE 16 INCH Oct. or Sq. PRECAST CONCRETE AND SHALL BE DRIVEN TO A MINIMUM BEARING CAPACITY OF 44 TONS PER PILE. ALL PILING IN INTERIOR BENTS SHALL BE 16 INCH Oct. or Sq. PRECAST CONCRETE AND SHALL BE DRIVEN TO A MINIMUM BEARING CAPACITY OF 44 TONS PER PILE AS SHOWN ON THE LAYOUT.

SPECIFICATIONS: ARKANSAS STATE HIGHWAY COMMISSION STANDARD SPECIFICATIONS FOR HIGHWAY CONSTRUCTION, EDITION OF 1978 AND APPLICABLE SPECIAL PROVISIONS.

LIVE LOADING: HS20

METHOD OF DESIGN: SERVICE LOAD

UNIT STRESSES: f'c = COMPRESSIVE STRENGTH OF CLASS "S" CONCRETE 3,500 PSI
fy = YIELD STRENGTH OF REINFORCING STEEL 60,000 PSI

QUANTITIES PER BENT

	CONCRETE	REINFORCING STEEL
END BENT	8.87 CU. YDS.	1158 LBS.
INT. BENT FIX.-FIX	6.92 CU. YDS.	1009 LBS.
INT. BENT FIX.-EXP.	6.92 CU. YDS.	974 LBS.

DETAILS OF STANDARD PILE BENTS

25'-0" R.C. SLAB SPAN

30'-0" CLEAR ROADWAY

CONCRETE PARAPET RAILING

ROUTE 35 SEC. 7

ARKANSAS STATE HIGHWAY COMMISSION

LITTLE ROCK, ARK.

DRAWN BY: D.H.P. DATE: 4-6-83
CHECKED BY: H.J.D. DATE: 4-8-83
DESIGNED BY: G.V.A. DATE: 4-5-83
SCALE: As Noted

Kirsal Pinkerton
BRIDGE ENGINEER

BRIDGE NO. 6142 & 6144 DRAWING NO. 27604

DATE REVISED	DATE FILMED	DATE REVISED	DATE FILMED	FED. ROAD NO.	STATE	FED. AID PROJ. NO.	SHEET NO.	TOTAL SHEETS
4-9-86	5-20-4-16-86			6	ARK.			
				JOB NO.		2980	24	59

① 6142 & 6144 SLAB SPAN 27605

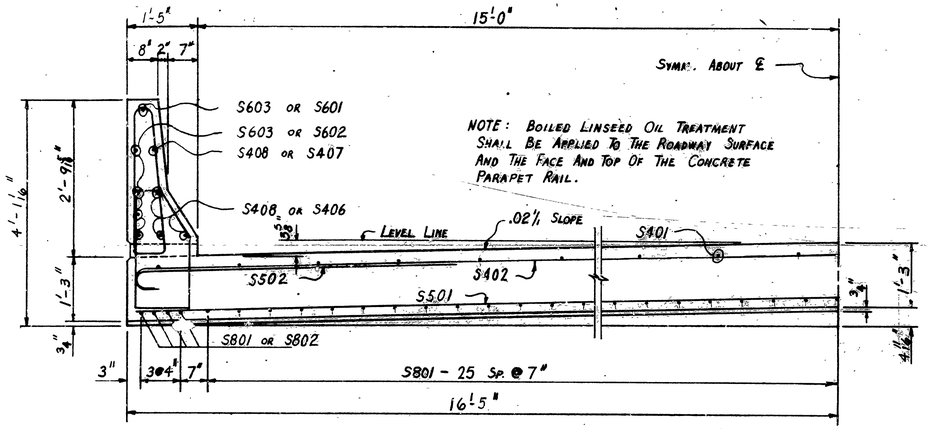

HALF-SECTION THRU ROADWAY
N.T.S.

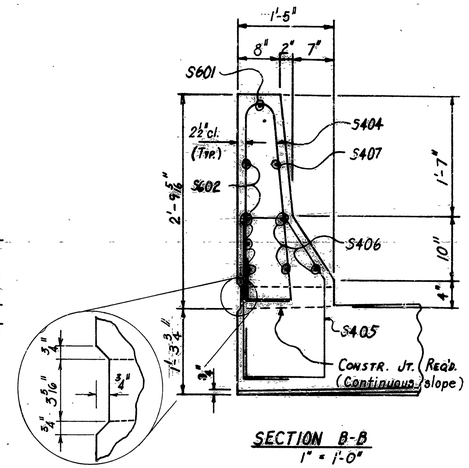

SECTION B-B
1" = 1'-0"

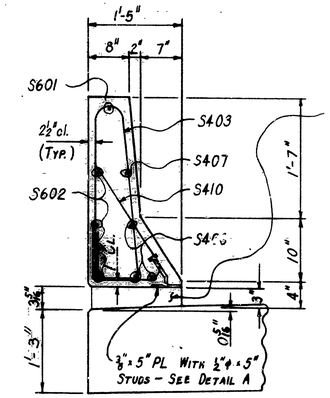

NOTE: Drain Shall Taper From 5" x 8'-0" At Curb To 3 5/16" x 8'-0" At Back Face Of Concrete Parapet Rail.

SECTION C-C
1" = 1'-0"

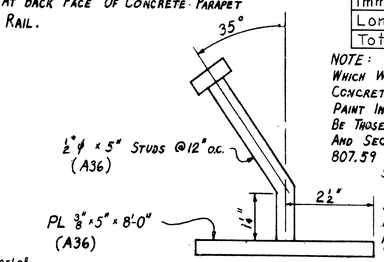

DETAIL A
½" = 1"

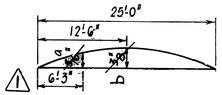

D.L. CAMBER DIAGRAM

DEAD LOAD DEFLECTION

Variable	a	b
Immediate	1/16"	1/8"
Long Term	3/16"	3/16"
Total Deflection	1/4"	5/16"

NOTE: The Surfaces Of The ⅜" Plates Which Will Not Be In Contact With Concrete Shall Receive Two Coats Of Paint In The Shop. These Coats Shall Be Those Specified As First Shop Coat And Second Field Coat In Subsection 807.59 (a) And 807.59 (c), and SP807-10. Studs Shall Be 5" Long, Granular Flux Filled, Solid Fluxed, Or Equal And Automatically Welded To Plate. Studs & Plate To Be Measured And Paid For As Class "S(AE) Concrete.

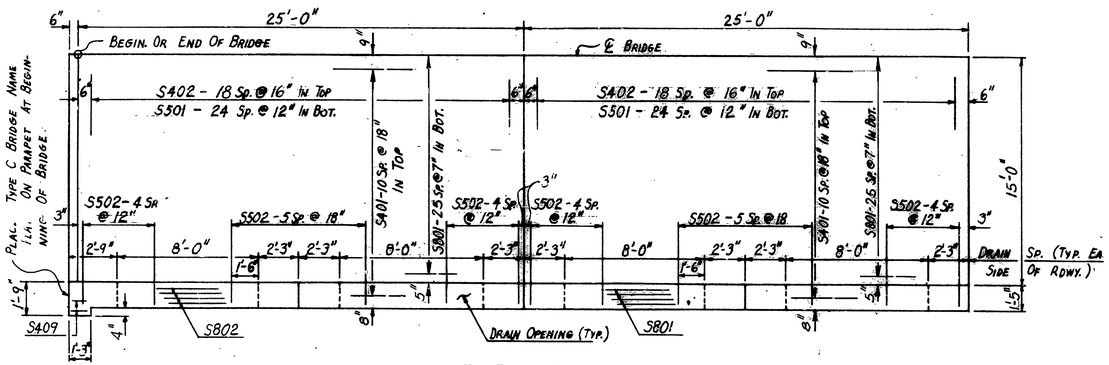

HALF - PLAN
N.T.S

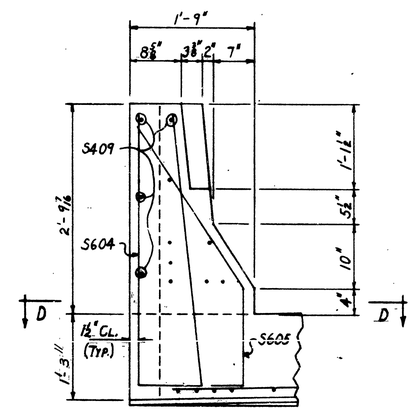

SECTION A-A
1" = 1'-0"

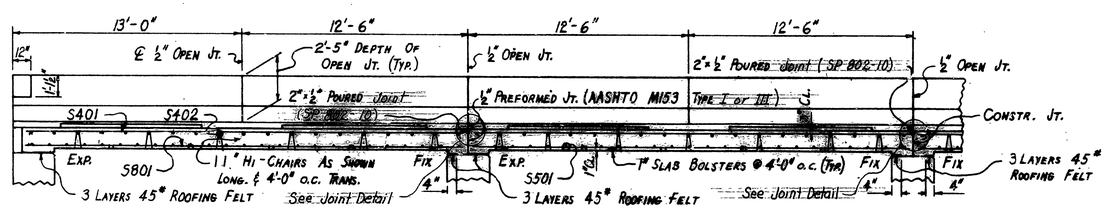

LONGITUDINAL SECTION AT ℄ BRIDGE
¼" = 1'-0"

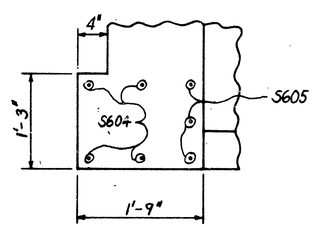

SECTION D-D
1" = 1'-0"

⅜" x 8" A325 Galvanized Bolts With 1¾" Threaded. (Non-Pay Item, Subsidiary To Other Items) (Type I). See Dwg. Gr.-8A For Guard Rail Conn. Details.

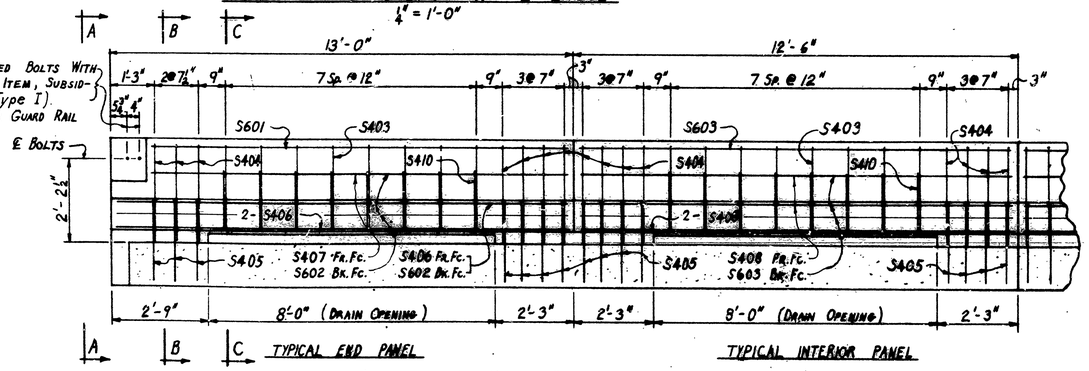

LONGITUDINAL SECTION AT CURB
½" = 1'-0"

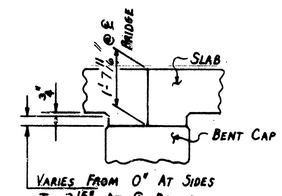

RISER DETAIL
½" = 1'-0"

BAR LIST (ONE BENT)

MK	No. Req'd. End	No. Req'd. Int.	Length	Pin Dia.
S401	22	22	24'-8"	Str.
S402	19	19	33'-6"	3"
S403	32	32	6'-4"	2"
404	30	32	6'-10"	2"
S405	30	32	7'-1"	2"
S406	6	–	12'-8"	Str.
S407	2	–	11'-8"	Str.
S408	8	16	12'-1"	Str.
S409	8	–	11'	Str.
S410	32	32	3'-2"	2"
S501	25	25	32'-6"	Str.
S502	32	32	6'-7"	3¾"
S601	2	–	11'-8"	Str.
S602	6	–	12'-8"	Str.
S603	10	20	12'-1"	Str.
S604	4	–	7'-11"	3¾"
S605	6	–	4'-5"	3¾"
S801	51	59	24'-8"	Str.
S802	8	–	25'-2"	Str.

Bending Diagrams

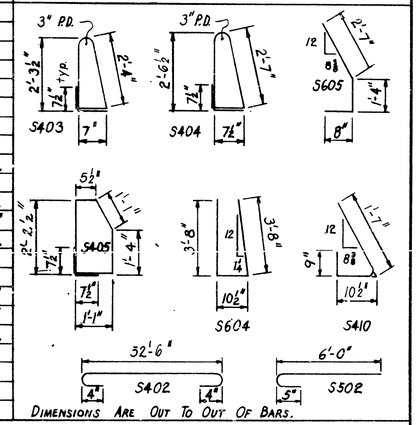

GENERAL NOTES

ALL CONCRETE TO BE CLASS S. ALL EXPOSED CORNERS TO BE CHAMFERED 3/4" UNLESS OTHERWISE NOTED.

REINFORCING STEEL TO BE ASTM A615, GRADE 60 OR A617. BAR SUPPORTS WILL NOT BE PAID FOR DIRECTLY, BUT WILL BE CONSIDERED SUBSIDIARY TO THE ITEM "REINFORCING STEEL".

ROOFING FELT, BITUMINOUS FELT, PREFORMED JOINT, AND POURED JOINTS SHALL BE MEASURED AND PAID FOR AS CLASS S OR S(AE) CONCRETE.

SPECIFICATIONS: ARKANSAS STATE HIGHWAY COMMISSION STANDARD SPECIFICATIONS FOR HIGHWAY CONSTRUCTION EDITION OF 1978, AND APPLICABLE SPECIAL PROVISIONS.

DESIGN SPECIFICATIONS: AASHTO 1983 AND INTERIM.
DESIGN LIVE LOADING: HS20
LOAD DISTRIBUTION TO SLAB: DEAD LOAD (SLAB & PARAPET) = 234 PSF Includes 25# Future Surface.

LIVE LOAD = 0.184 WHEELS/FT + 30% IMPACT

METHOD OF DESIGN: LOAD FACTOR
MINIMUM 28 DAY COMPRESSIVE STRENGTH OF CONCRETE, f'c = 3500 PSI

YIELD STRENGTH OF REINFORCING STEEL, fy = 60,000 PSI

NOTE: For Joint Detail See Drwg No. 27598

⚠ Revised Deflections 4-9-86, D.H.P.

Quantity	End Span	Int. Span
Concrete **	43.26 Cu. Yds.	42.97 Cu. Yds.
Reinforcing Steel	6825	6753
Structural Steel	215 Lbs.	215 Lbs.

* Not Paid For Directly, Subsidiary To The Item "Class S(A.E.) Concrete".

** Concrete Quantities calculated for 2'-4" Caps.

DETAILS OF STANDARD
25'-0" R.C. SLAB SPANS
CONC. PARAPET RAIL - 30'-0" CL. RDWY.
ROUTE 35 SEC. 7

ARKANSAS STATE HIGHWAY COMMISSION
LITTLE ROCK, ARK.

ALTERED BY: D.H.P. DATE: 5-10-83
CHECKED BY: GVA DATE: 5-10-83
DESIGNED BY: GVA DATE: 5-10-83
SCALE: As Noted

Kenneth Anderson
BRIDGE ENGINEER

BRIDGE NO. 6142 & 6144 DRAWING NO. 27605