DATE REVISED	DATE FILMED	DATE REVISED	DATE FILMED	FED. ROAD DIST. NO.	STATE	FED. AID PROJ. NO.	SHEET NO.	TOTAL SHEETS
				6	ARK.			
				JOB NO.		040230	53	143
				(1) 06789 & 06790		SPEC. APPR. GUTRS.		40467

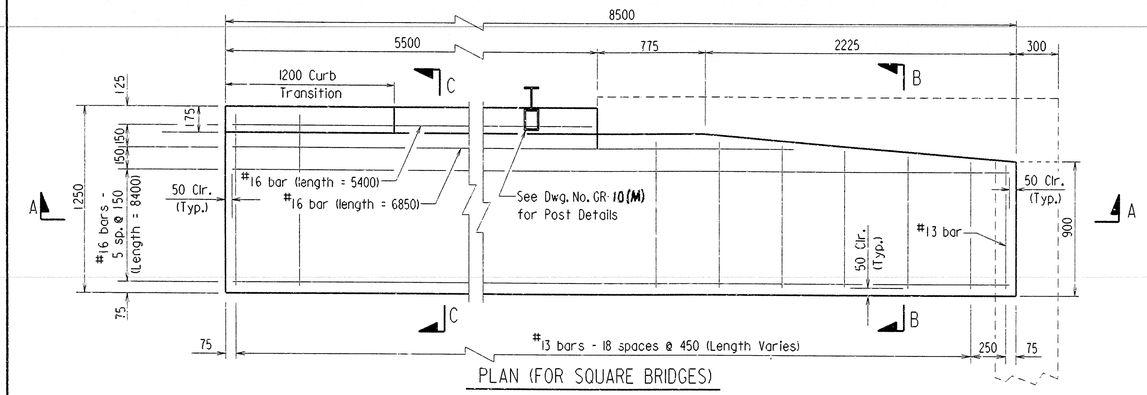

PLAN (FOR SQUARE BRIDGES)

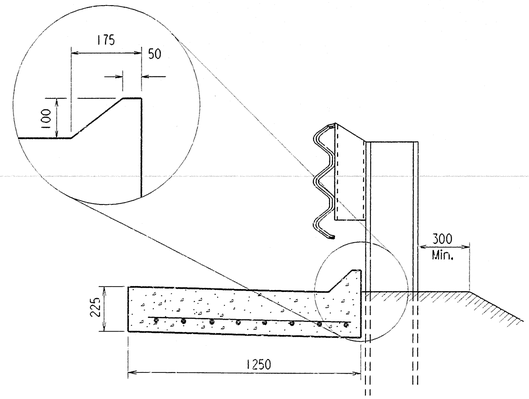

SECTION C - C

N.T.S.

QUANTITIES FOR ONE SQUARE APPROACH GUTTER

Concrete	Reinforcing Steel
2.24 m^3	117 kg

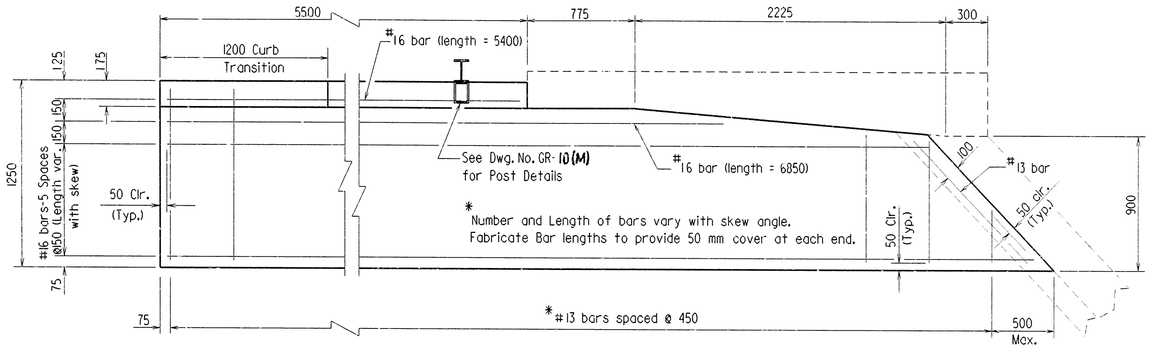

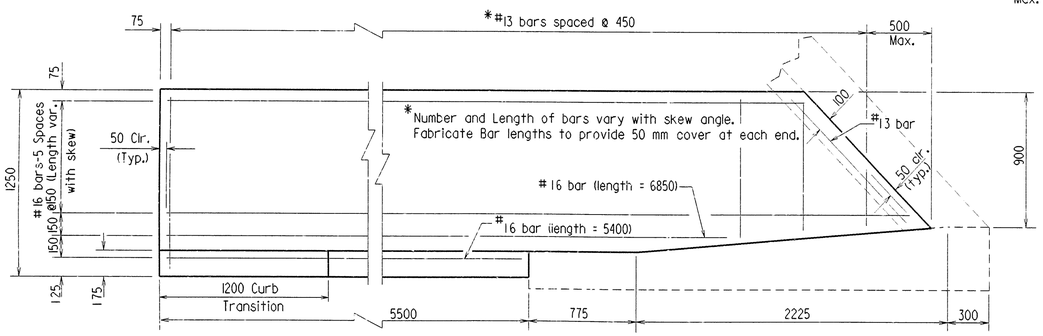

PLAN (FOR SKEWED BRIDGES)

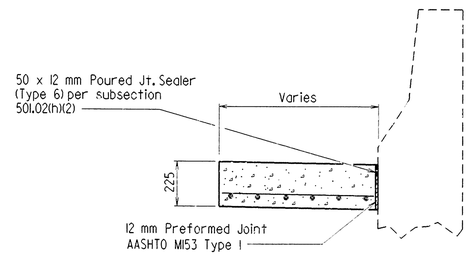

SECTION B - B

N.T.S.

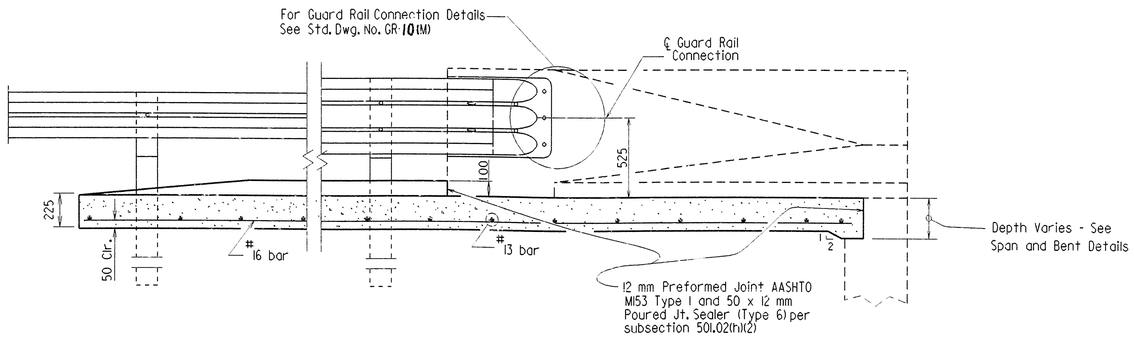

SECTION A-A

GENERAL NOTES

All dimensions are in millimeters unless otherwise noted.

Concrete shall be Class S or Class S (AE) or mixture used for Portland Cement Concrete Pavement.

Reinforcement Steel shall conform to ASTM A 615/A615M-96a, Grade 420. Fabricate bar lengths to provide 50 mm cover at each end.

Approach Gutters will be measured and paid for in accordance with Section 504 of the Standard Specifications.

MICROFILMED

APR 11 2000

STATE OF ARKANSAS
Edward T. Fain
REGISTERED PROFESSIONAL ENGINEER
No. 3915
3-15-00
EDWARD T. FAIN

BRIDGE ENGINEER

DETAILS OF TYPE SPECIAL APPROACH GUTTERS

ROUTE 45 SEC. 5

ARKANSAS STATE HIGHWAY COMMISSION

LITTLE ROCK, ARK.

DRAWN BY: AMS DATE: 12/14/98 FILENAME: B040230.AI

CHECKED BY: CH DATE: 1/00 SCALE: 1:20 or as noted

DESIGNED BY: STP DATE: /

BRIDGE NO. 06789, 06790 DRAWING NO. 40467

AHD METRIC

DATE REVISED	DATE FILMED	DATE REVISED	DATE FILMED	FED. ROAD DIST. NO.	STATE	FED. AID PROJ. NO.	SHEET NO.	TOTAL SHEETS
				6	ARK.			
				JOB NO.		040230	54	143
				1	06790	LAYOUT	40468	

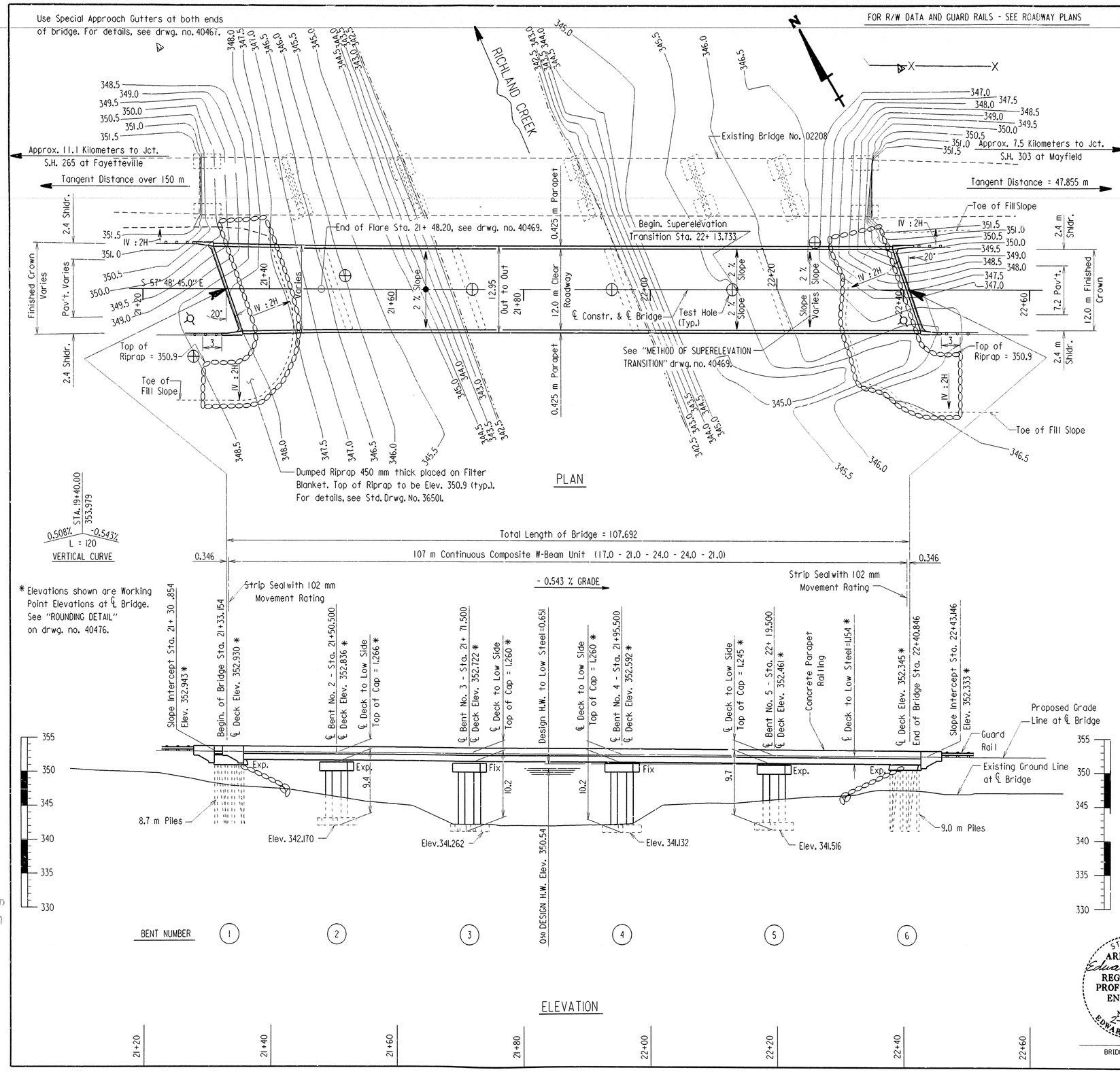

MICROFILMED APR 11 2000

GENERAL NOTES

All dimensions are in meters unless otherwise noted.

BENCH MARK: Chiseled square in southwest corner bridge, 9.46 Lt. of ℄ Constr., Sta. 21+27.799, Elevation 352.126.

CONSTRUCTION SPECIFICATIONS: Arkansas State Highway and Transportation Department Standard Specifications for Highway Construction (1996 Edition), with applicable supplemental specifications and special provisions. Unless otherwise noted in the plans, Section and Subsection refers to the Standard Construction Specifications

DESIGN SPECIFICATIONS: AASHTO Standard Specifications for Highway Bridges (1996 Edition), with current interim specifications.

LIVE LOADING: MS 18 METHOD OF DESIGN: Load Factor
SEISMIC PERFORMANCE CATEGORY: A

MATERIALS AND STRENGTHS:

Class S(AE) Concrete (Parapet Railing)	f'c = 28.0 MPa
SRA Modified Class S(AE) Concrete (Deck)	f'c = 28.0 MPa
Class S Concrete (substructure)	f'c = 24.0 MPa
Reinforcing Steel (ASTM A615/A615M-96a)	fy = 420 MPa
Structural Steel (AASHTO M 270, Grade 345W)	Fy = 345 MPa
Structural Steel (AASHTO M 270, Grade 250)	Fy = 250 MPa

BORING LOGS: Boring logs may be obtained from the Programs and Contracts Division.

STEEL PILING: All piling shall be HP 310 x 79 and shall be driven with an approved air, steam, or diesel hammer to a minimum safe bearing capacity of 490 kN per pile and into the material designated as limestone on the boring legend. Piling shall be driven to a minimum penetration of 3.0 meters below natural ground after embankment to bottom of cap is in place. Lengths shown are for estimating quatities and for use in determining payment for cut-off and build-up in accordance with the Standard Specifications. On all piles the Contractor shall use approved steel H-Pile driving points.

FOOTINGS: Footings in Bent Nos. 2 and 5 shall be set a minimum of 0.5 m into material designated as hard cherty limestone. Footings for Bent Nos. 3 and 4 shall be set a minimum of 0.6 m into material designated as hard cherty limestone. The top of the footings of Bent Nos. 3 and 4 shall be set at or below the channel bottom. Rock excavations shall be made to neat lines of the concrete footings. Care shall be exercised to avoid shattering of rock faces by excessive blasting. Concrete in the footings shall be poured directly against excavated surfaces of rock. Foundations for footings shall be prepared in accordance with Section 801.04.

BRIDGE DECK: The concrete bridge deck shall be given a tine finish as specified for final finishing in subsection 802.19 for Class 5 Tined Bridge Roadway Surface Finish.

DETAIL DRAWINGS:	DRAWING NO.
End Bents	40470 - 40472
Intermediate Bents	40473 - 40475
107 m Continuous W-Beam Unit	40476 - 40480
Steel Piling	36505
Type Special Approach Gutter	40467

EXISTING BRIDGE: Existing Bridge No. 02208 (log mile 9.80) is 10.2 m wide and 105.8 m long. It consists of Cantilever I- Beam Spans supported on concrete piers.

REMOVAL AND SALVAGE: After the new bridge is opened to traffic, existing Bridge No. 02208 shall be removed in accordance with Section 205. All material from the existing bridge shall become the property of the Contractor.

STATE OF ARKANSAS
Edward T. Fain
REGISTERED PROFESSIONAL ENGINEER
No. 3915
2-15-00
EDWARD T. FAIN
BRIDGE ENGINEER

(SHEET 1 OF 2)

LAYOUT OF BRIDGE OVER RICHLAND CREEK

WHITE RIVER, RICHLAND & BRUSH CRKS. STRS. & APPRS. (S)

WASHINGTON COUNTY

ROUTE 45 SEC. 5

ARKANSAS STATE HIGHWAY COMMISSION

LITTLE ROCK, ARK.

DRAWN BY: TEB DATE: 01/14/99 FILENAME: BR040230.L11
CHECKED BY: DATE: 2-14-00 SCALE: 1:300
DESIGNED BY: CES DATE: 1-99

BRIDGE NO. 06790 DRAWING NO. 40468

METRIC

DATE REVISED	DATE FILMED	DATE REVISED	DATE FILMED	FED. ROAD DIST. NO.	STATE	FED. AID PROJ. NO.	SHEET NO.	TOTAL SHEETS
				6	ARK.			
				JOB NO.		040230	55	143
				1 06790		LAYOUT	40469	

BORING LEGEND

C1 - Wet, Loose, Brown Silty Sand
E1 - Hard, Gray and White Fractured Cherty Limestone
K1 - Moist, Medium Stiff, Brown Sandy, Silty Clay
S1 - Moist, Loose, Brown Silty Sand
C2 - Wet, Very Dense, Brown and Gray Sand and Chert Fragments
E2 - Moist, Very Stiff, Brown and Gray Sandy, Silty Clay with Gravel
F2 - Moist, Very Stiff to Stiff, Brown Sandy, Silty Clay
G2 - Moist to Wet, Stiff, Brown and Gray Sandy Clay with Chert Fragments
H2 - Wet, Dense, Brown and Gray Sand and Chert Fragments
J2 - Hard, Gray and White Limestone with some Fractured Seams
K2 - Hard, Gray and White Limestone
L2 - Hard, Gray and White Cherty Limestone
M2 - Moist, Medium Stiff, Brown Sandy Clay
N2 - Moist, Soft, Brown Sandy, Silty Clay
P2 - Hard, Gray and White Cherty Limestone with some Fractured Seams
Q2 - Wet, Dense, Brown and Gray Sand and Chert and Limestone Fragments
R2 - Cavity (6.80 m to 6.86 m)
S2 - Hard, Gray and White Cherty Limestone
T2 - Moist to Wet, Dense, Brown and Gray Sand with Chert Fragments

"N" VALUES

Sta. 21+28 - 10 m Right of Center Line of Construction
1.22 - 1.52, N = 22
2.74 - 3.04, N = 21
4.26 - 4.56, N = 14
5.79 - 6.09, N = 9

Sta. 21+52 - 2 m Left of Center Line of Construction
1.16 - 1.46, N = 7
2.68 - 2.93, N = 63 (.24)

Sta. 22+13 - Center Line of Construction
1.22 - 1.52, N = 8
2.74 - 3.04, N = 33

Sta. 22+26 - 7 m Left of Center Line of Construction
1.37 - 1.67, N = 7
2.89 - 3.13, N = 6
4.42 - 4.45, N = 60 (.03)

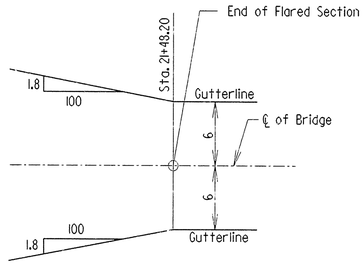

FLARED END
NTS

HYDRAULIC DATA

FLOOD DESCRIPTION	FREQUENCY	DISCHARGE	▲ NATURAL WATER SURFACE ELEVATION	WATER SURFACE ELEVATION WITH BACKWATER
	YEARS	CMS	METERS	METERS
DESIGN	50	850	350.54	350.69
BASE	100	990	351.20	351.36
EXTREME	500	1340	352.89	353.12
OVERTOPPING	300	1220	352.32	352.60

▲ UNCONSTRICTED WATER SURFACE WITHOUT STRUCTURES OR ROADWAY APPROACHES

DRAINAGE AREA = 370 SQUARE KILOMETERS

HISTORICAL H.W. ELEVATION = 350.46 METERS

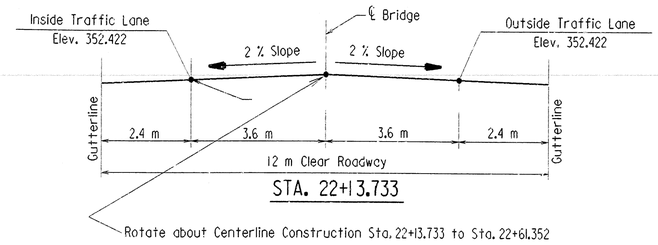

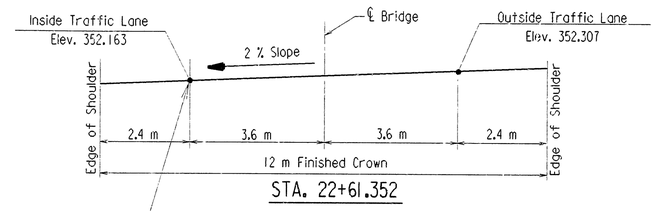

METHOD OF SUPERELEVATION TRANSITION
N.T.S.

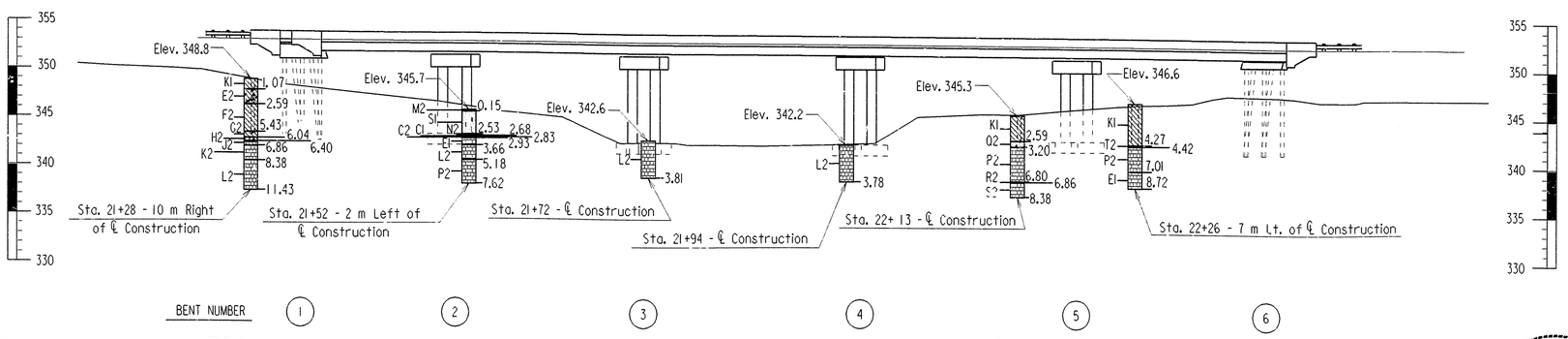

MICROFILMED
APR 11 2000

STATE OF ARKANSAS
Edward T. Fain
REGISTERED PROFESSIONAL ENGINEER
No. 3915
11-23-99
EDWARD T. FAIN
BRIDGE ENGINEER

(SHEET 2 OF 2)
LAYOUT OF BRIDGE OVER
RICHLAND CREEK
WHITE RIVER, RICHLAND & BRUSH
CRKS. STRS. & APPRS. (S)
WASHINGTON COUNTY
ROUTE 45 SEC. 5
ARKANSAS STATE HIGHWAY COMMISSION
LITTLE ROCK, ARK.

DRAWN BY: TEB DATE: 01/14/99 FILENAME: BR040230.LI2
CHECKED BY: MCW DATE: 11-18-99 SCALE: 1:300
DESIGNED BY: CES DATE: 1-99
BRIDGE NO. 06790 DRAWING NO. 40469

A H METRIC D

DATE REVISED	DATE FILMED	DATE REVISED	DATE FILMED	FED. ROAD DIST. NO.	STATE	FED. AID PROJ. NO.	SHEET NO.	TOTAL SHEETS
△1 3/21/01	8-13-01			6	ARK.		17	
				JOB NO.		040230		
				① 06789, 06790 & 02712 QUANTITIES			40445	

SCHEDULE OF BRIDGE QUANTITIES - JOB NO. 040230

BRIDGE NUMBER	CODE NUMBER	NAME PLATE TITLE	UNIT OF STRUCTURE	ITEM NO.	205	603	801	SS & 802	SS & 802	803	SP & 804	SP & 804	805	SP & 807	SP & 808	809	812	816	816	816	821	SP JOB 040230	SP JOB 040230	SP JOB 040230	SP & 802 JOB 040230
				ITEM	REMOVAL OF EXISTING BRIDGE STRUCTURE (SITE NO.)	TEMPORARY BRIDGE STRUCTURE (7.2 METER ROADWAY WIDTH)	UNCLASSIFIED EXCAVATION FOR STRUCTURES-BRIDGE	CLASS S CONCRETE-BRIDGE	CLASS S (AE) CONCRETE-BRIDGE	CLASS I PROTECTIVE SURFACE TREATMENT	REINFORCING STEEL - BRIDGE (GRADE 420)	EPOXY COATED REINFORCING STEEL (GRADE 420)	② STEEL PILING (HP 310 X 79))	STRUCTURAL STEEL IN BEAM SPANS (M270, GRADE 345W)	ELASTOMERIC BEARINGS	PREFORMED JOINT SEAL	BRIDGE NAME PLATE (TYPE C)	DUMPED RIPRAP	FILTER BLANKET	FOUNDATION PROTECTION RIPRAP	MODIFICATION OF EXISTING BRIDGE STRUCTURE (BRIDGE NO. 02712)	REPAIR OF EXISTING BENTS	CRACK REPAIR	ARMORED JOINT WITH NEOPRENE STRIP SEAL	SRA MODIFIED CLASS S(AE) CONCRETE
				UNIT	LUMP SUM	METER	CUBIC METER	CUBIC METER	CUBIC METER	LITER	KILOGRAM	KILOGRAM	METER	KILOGRAM	CUBIC CENTIMETER	METER	EACH	CUBIC METER	SQUARE METER	METRIC TON	LUMP SUM	CUBIC METER	METER	METER	CUBIC METER
06789	X071	WHITE RIVER	END BENT NO. 1					19.36		1	1087		65.0	350			1	188	390						
			INT. BT. NO. 2 & 5				116	91.52			6271		100.8												
			INT. BT. NO. 3 & 4				121	91.18			6271		99.2												
			INT. BT. NO. 6				72	49.56			3468		40.0												
			INT. BT. NOS. 7 & 8				187	146.70			11 248														
			END BENT NO. 9				47	19.98		1	1395		20.4	350											
			85 m CONT. W-BEAM UNIT						263.37	109		34 834		90 840	141 180									13.0	
			79 m CONT. W-BEAM UNIT						244.63	102		32 326		141 670	132 520									25.9	
			TOTAL FOR BRIDGE NO. 06789				543	418.3	508.0	213	29 740	67 160	325.4	233 210	273 700		1	188	390					38.9	
06790	X071	RICHLAND CREEK	END BENT NO. 1					23.46		1	1528		52.2	387			1	129	260						
			INT. BT. NO. 2				93	43.10			3489														
			INT. BT. NOS. 3 & 4				43	91.24			7378														
			INT. BT. NO. 5				110	44.58			3612														
			END BENT NO. 6					22.72		1	1483		54.0	370				168	353						
			107 m CONT. W-BEAM UNIT						48.40	138		42 900		150 328	189 700									28.0	283.80
			TOTAL FOR BRIDGE NO. 06790				246	225.1	48.4	140	17 490	42 900	106.2	151 085	189 700		1	297	613					28.0	283.80
02712	X071	BRUSH CREEK	END BENT NOS. 1 & 5				40	34.80		2	2501		21.6	719			1	58	883	△1 ~~474~~ 506					
			INT. BT. NOS. 2, 3 & 4				△1 ~~92~~ 148	△1 ~~44.10~~ 74.50			△1 ~~4449~~ 7169											△1 ~~0~~ 0	△1 ~~6~~ 0		
			60.96 m CONT. W-BEAM UNIT						188.50	78		25 580		65 731	116 500	25.9									
			TOTAL FOR BRIDGE NO. 02712			47.2	~~132~~ 188	~~78.9~~ 109.3	188.5	80	~~6950~~ 9670	25 580	21.6	66 450	116 500	25.9	1	58	883	~~474~~ 506		~~0.1~~ 0	~~6~~ 0		
			SITE NO. 1 (STA. 17+02)	1																					
			SITE NO. 2 (STA. 21+87)	1																					
			△1 SITE NO. 3 (STA. 44+55)	1																					
			TOTALS FOR JOB NO. 040230			47.2	① ~~921~~ 977	~~722.3~~ 752.7	744.9	433	~~54 180~~ 56,900	135 640	453.2	450 745	579 900	25.9	3	543	1886	~~474~~ 506	△1 ~~1~~ 0	~~0.1~~ 0	~~6~~ 0	66.9	283.80

① INCLUDES APPROX. 166 CUBIC METERS OF ROCK EXCAVATION.

② THESE STEEL PILES ARE REQUIRED TO HAVE SPECIAL POINTS WHICH WILL NOT BE PAID FOR DIRECTLY BUT WILL BE CONSIDERED SUBSIDIARY TO THE ITEM "STEEL PILING (HP 310 X 79)".

JAMES TRIBO
DESIGN SECTION SUPERVISOR

STATE OF ARKANSAS
Edward T. Fain
REGISTERED PROFESSIONAL ENGINEER
No. 3915
8-3-01
EDWARD T. FAIN

BRIDGE ENGINEER

△1 Revised Int. Bts. 2, 3 & 4 MJT 3/21/01 Checked By: J.C.T.

SCHEDULE OF BRIDGE QUANTITIES
WHITE RIVER, RICHLAND & BRUSH CRKS.
STRS. & APPRS. (S)
WASHINGTON COUNTY
ROUTE 45 SEC. 5
ARKANSAS STATE HIGHWAY COMMISSION
LITTLE ROCK, ARK.

DRAWN BY: MAH DATE: 11/19/99 FILENAME: B040230.01
CHECKED BY: AHS DATE: 2/16/00 SCALE: N.T.S.
DESIGNED BY: DATE:

BRIDGE NO. 06789, 06790 & 02712 DRAWING NO. 40445

A H METRIC D

DATE REVISED	DATE FILMED	DATE REVISED	DATE FILMED	FED. ROAD DIST. NO.	STATE	FED. AID PROJ. NO.	SHEET NO.	TOTAL SHEETS
				6	ARK.			
				JOB NO.		040230	56	143
				(1)	06790	END BENT DTLS.	40470	

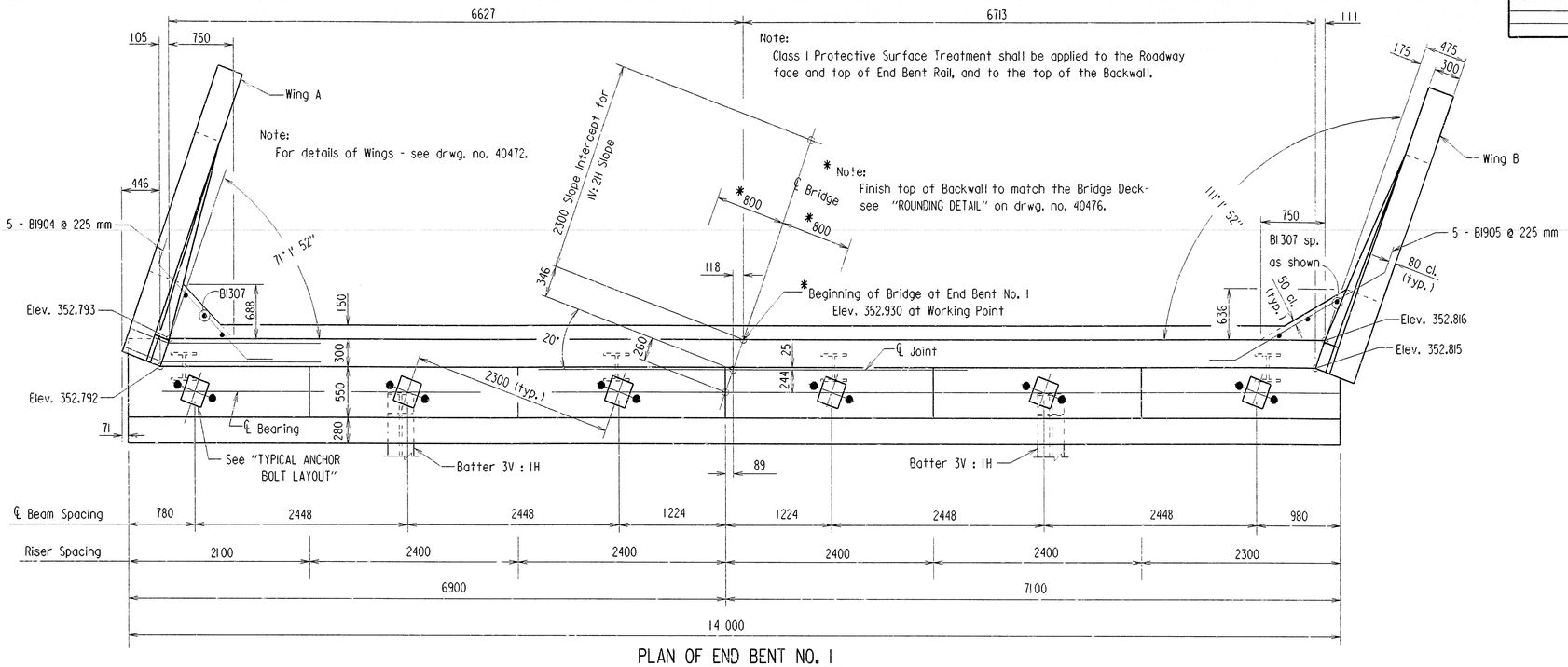

PLAN OF END BENT NO. 1

1:30

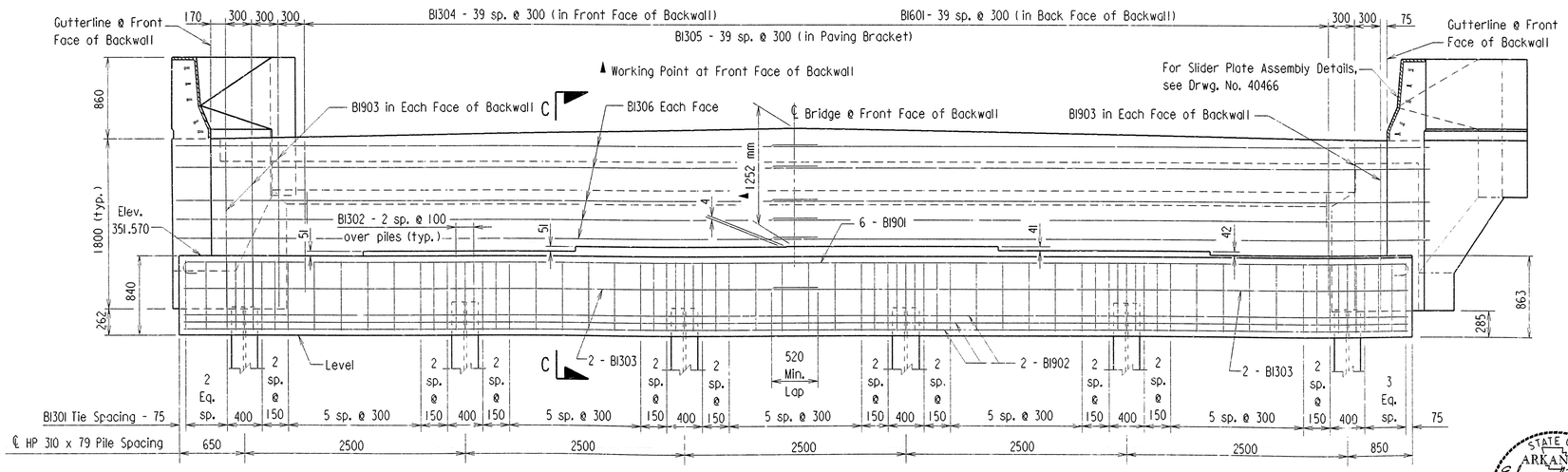

ELEVATION OF END BENT NO. 1 (LOOKING BACK)

1:30

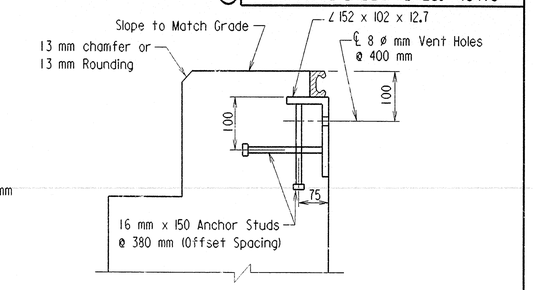

Note: For Joint Details, See drwg. no. 40466.

DETAIL Z

N.T.S.

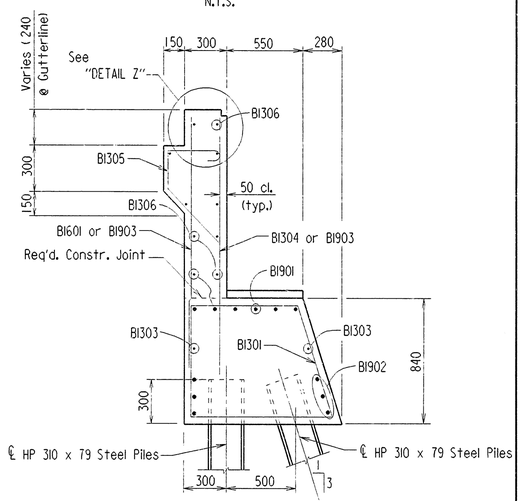

SECTION C-C

1:20

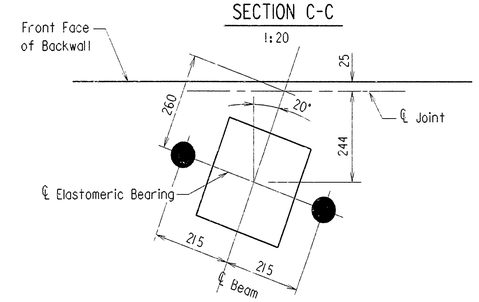

TYPICAL ANCHOR BOLT LAYOUT

N.T.S.

MICROFILMED

APR 11 2001

STATE OF ARKANSAS
Edward T. Fain
REGISTERED PROFESSIONAL ENGINEER
No. 5915
11-23-99
EDWARD T. FAIN

BRIDGE ENGINEER

(SHEET 1 OF 3)

DETAILS OF END BENTS

RICHLAND CREEK

ROUTE 45 SEC. 5

ARKANSAS STATE HIGHWAY COMMISSION

LITTLE ROCK, ARK.

DRAWN BY:	TEB	DATE:	11/8/99	FILENAME:	B040230x2.BI1
CHECKED BY:	AMS	DATE:	11/15/99	SCALE:	As Noted
DESIGNED BY:	AMS	DATE:	10/7/99		

BRIDGE NO. 06790 DRAWING NO. 40470

A H METRIC D

DATE REVISED	DATE FILMED	DATE REVISED	DATE FILMED	FED. ROAD DIST. NO.	STATE	FED. AID PROJ. NO.	SHEET NO.	TOTAL SHEETS
				6	ARK.			
				JOB NO.		040230	57	143
				1	06790	END BENT DTLS. 40471		

Note:
Class I Protective Surface Treatment shall be applied to the Roadway face and top of End Bent Rail, and to the top of the Backwall.

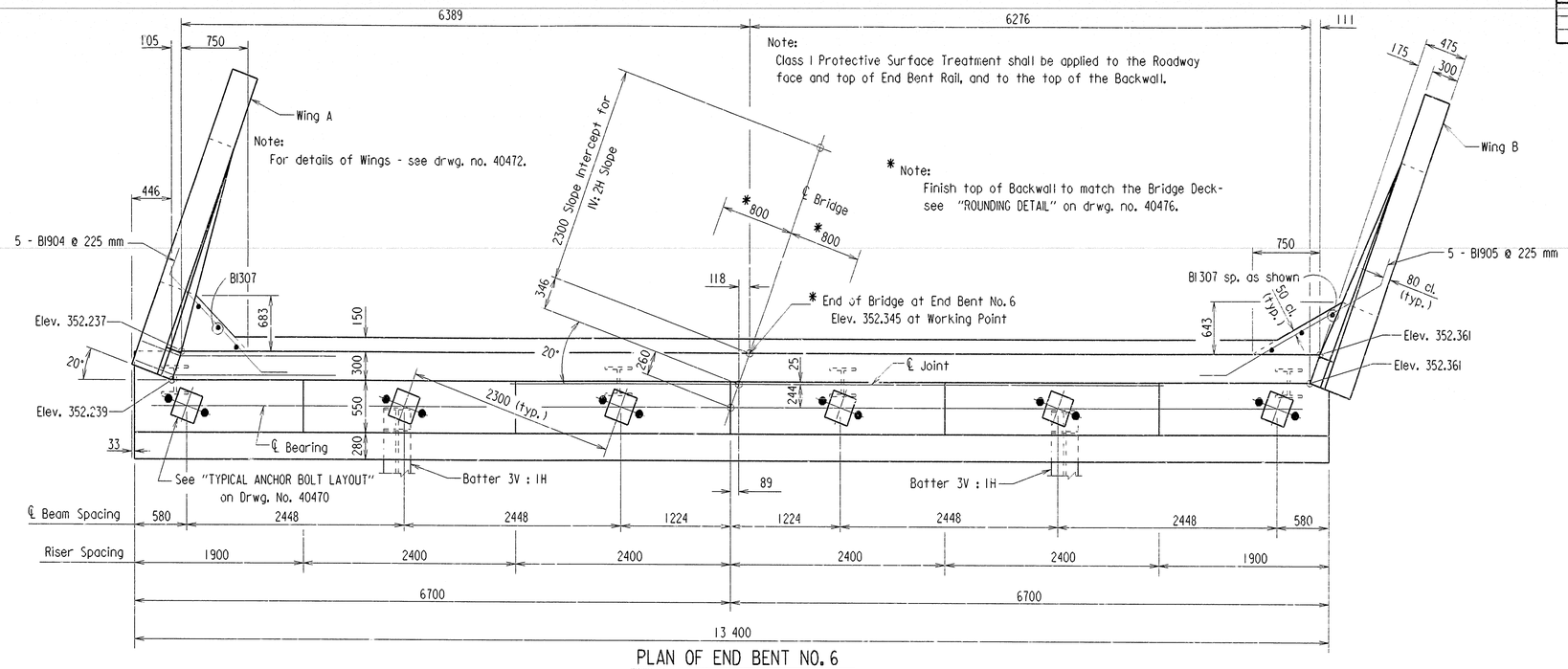

PLAN OF END BENT NO. 6

1:30

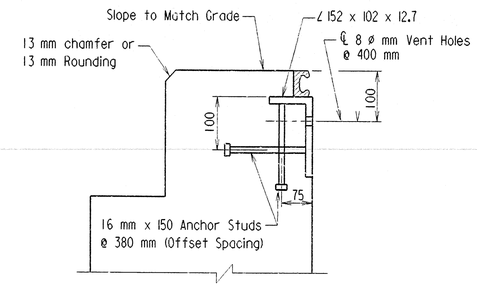

Note: For Joint Details, See drwg. no. 40466.

DETAIL Z

N.T.S.

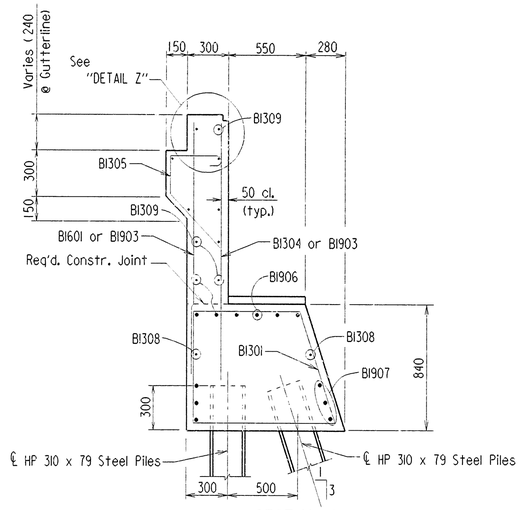

SECTION C-C

1:20

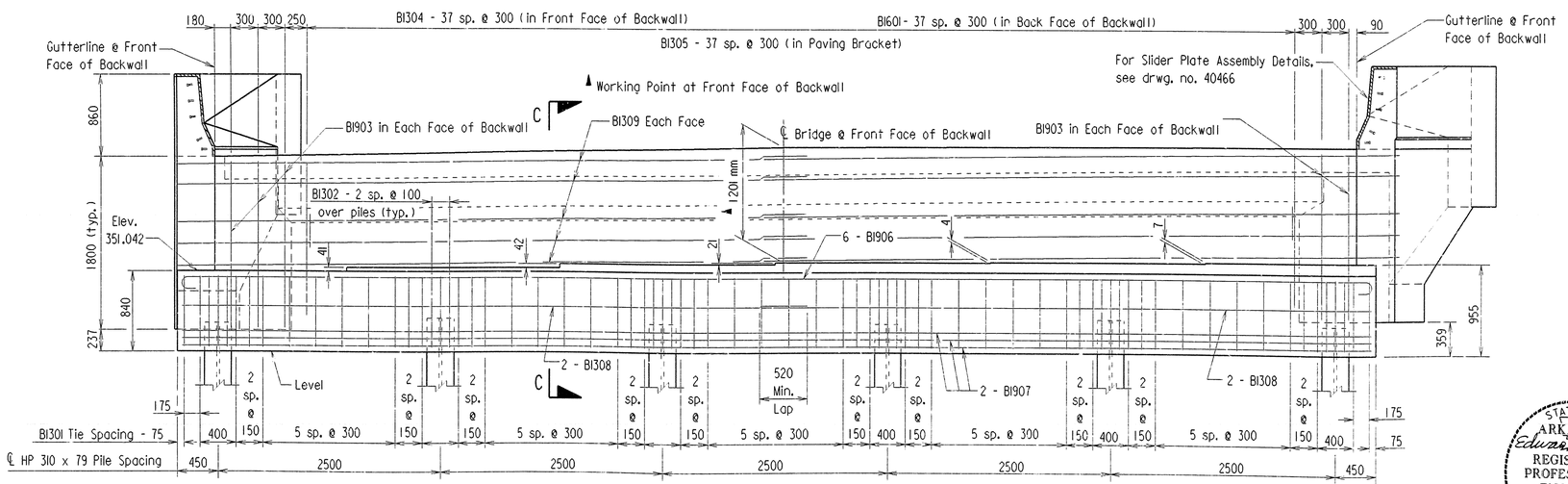

ELEVATION OF END BENT NO. 6 (LOOKING AHEAD)

1:30

MICROFILMED

APR 1 1 2000

STATE OF ARKANSAS
Edward T. Fain
REGISTERED PROFESSIONAL ENGINEER
No. 3915
11-23-99
EDWARD T. FAIN

BRIDGE ENGINEER

(SHEET 2 OF 3)

DETAILS OF END BENTS

RICHLAND CREEK

ROUTE 45 SEC. 5

ARKANSAS STATE HIGHWAY COMMISSION

LITTLE ROCK, ARK.

DRAWN BY: TEB DATE: 11/8/99 FILENAME: B040230x2.BI1

CHECKED BY: AMS DATE: 11/15/99 SCALE: As Noted

DESIGNED BY: AMS DATE: 10/7/99

BRIDGE NO. 06790 DRAWING NO. 40471

METRIC

DATE REVISED	DATE FILMED	DATE REVISED	DATE FILMED	FED. ROAD DIST. NO.	STATE	FED. AID PROJ. NO.	SHEET NO.	TOTAL SHEETS
				6	ARK.			
				JOB NO.		040230	58	143
				①	06790	END BENT DTLS.	40472	

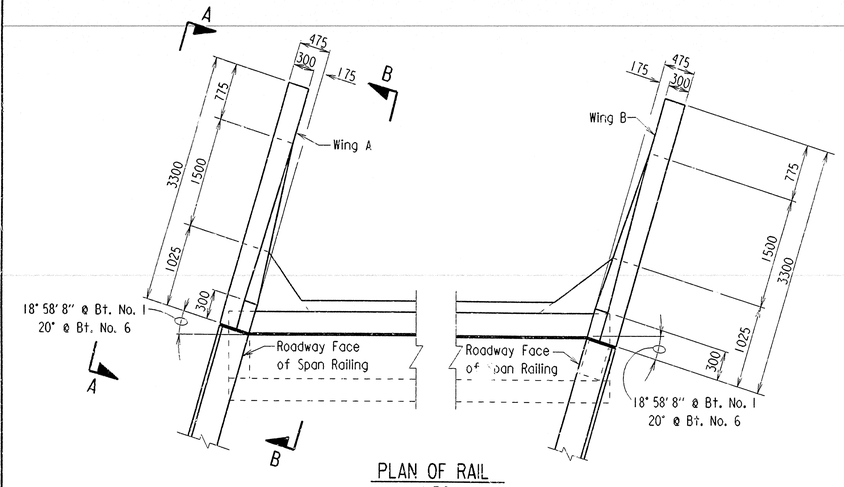

PLAN OF RAIL
N.T.S.

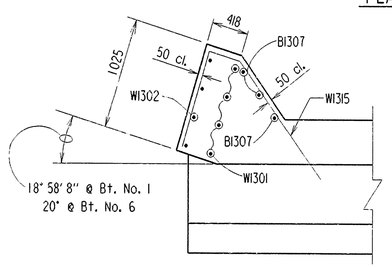

SECTION G-G (WING A)
N.T.S.

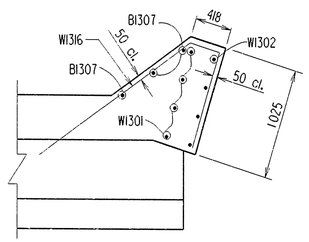

SECTION G-G (WING B)
N.T.S.

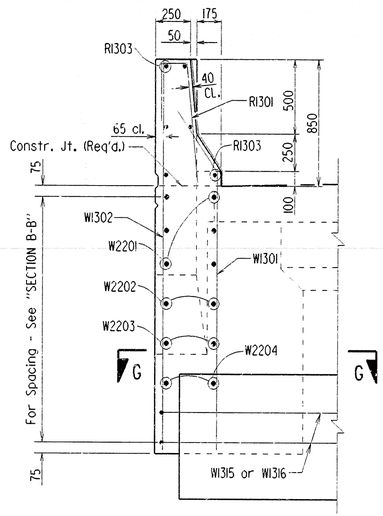

SECTION D-D
1:20

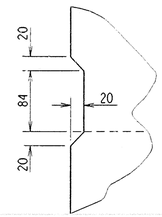

DETAIL H
1:30

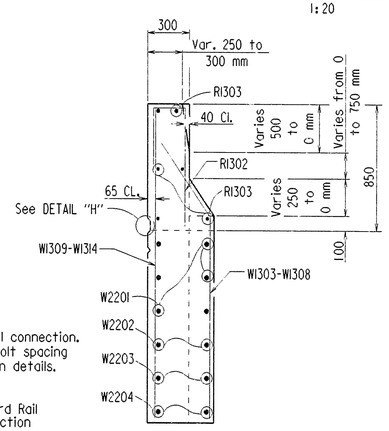

SECTION E-E
1:20

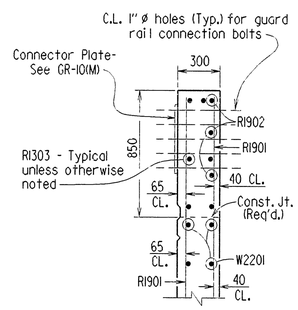

SECTION F-F
1:20

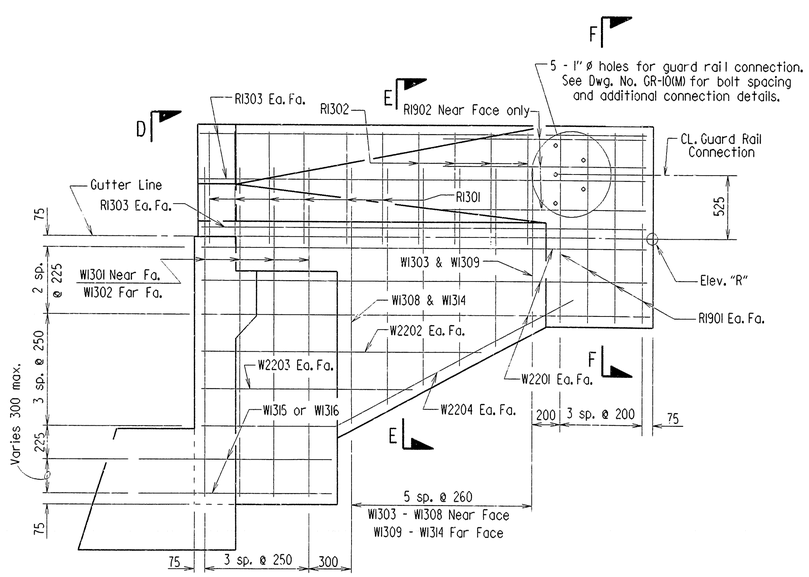

SECTION B-B
1:20

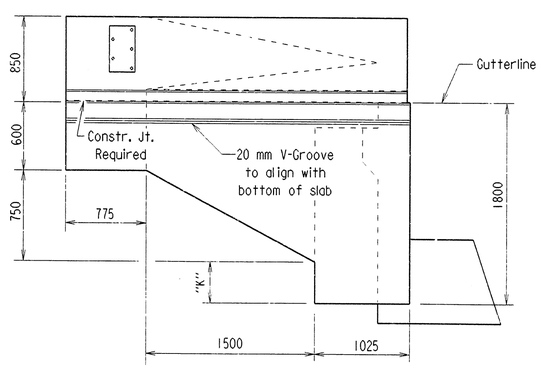

VIEW A-A
N.T.S.

BAR LIST - PER BENT

MARK	NUMBER REQUIRED Bt. 1	NUMBER REQUIRED Bt. 6	LENGTH	PIN. DIA.
BI301	57	54	3400	50
BI302	18	18	2250	50
BI303	4		7220	Str.
BI304	40	38	1750	Str.
BI305	40	38	1200	50
BI306	20		7430	Str.
BI307	6	6	1460	Str.
BI308		4	6920	Str.
BI309		20	7090	Str.
BI601	40	38	1750	Str.
BI901	6		14 330	114
BI902	6		13 900	Str.
BI903	10	10	1800	Str.
BI904	5	5	2130	114
BI905	5	5	2710	114
BI906		6	13 730	114
BI907		6	13 300	Str.
RI301	12	12	1170	50
RI302	8	8	1190	50
RI303	12	12	3200	Str.
RI901	16	16	1350	Str.
RI902	6	6	1500	Str.
WI301	8	8	2180	50
WI302	8	8	2550	Str.
WI303 TO WI308	2 EACH	2 EACH	960 TO 1610	50
WI309 TO WI314	2 EACH	2 EACH	1400 TO 2050	Str.
WI315	2	2	2660	50
WI316	2	2	3250	50
W2201	12	12	3200	Str.
W2202	4	4	2010	Str.
W2203	4	4	1560	Str.
W2204	4	4	2910	133

BENDING DIAGRAMS

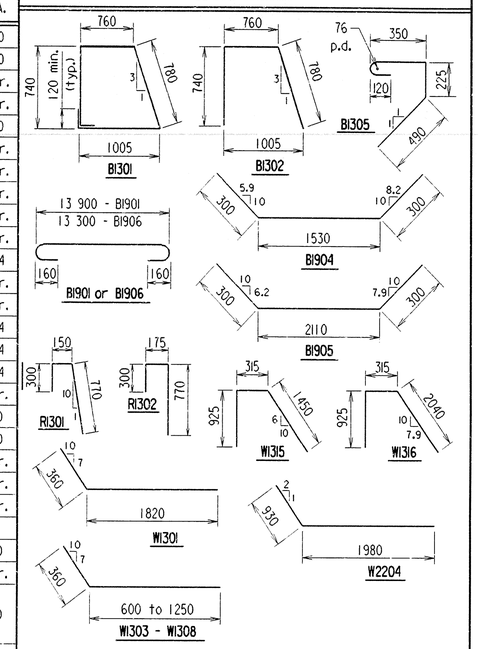

Dimensions are out to out of bars.

TABLE OF VARIABLES

BENT NO.	WING	ELEV. "R"	"K"
1	A	352.805	463
1	B	352.828	463
6	A	352.218	429
6	B	352.361	450

GENERAL NOTES

Stations and elevations are in meters. All other dimensions are in millimeters unless otherwise noted.

All concrete shall be Class "S" with a minimum 28 day compressive strength f'c = 24.0 MPa. Concrete shall be poured in the dry and and all exposed corners to be chamfered 20 mm unless otherwise noted.

All reinforcing steel shall conform to ASTM A 615/A 615M-96a, Grade 420 (yield strength = 420 MPa.)

Backwall shall not be poured before beams are in place, and concrete deck is poured.

Structural steel in end bents shall be AASHTO M270, Gr. 345W and shall be paid for as "STRUCTURAL STEEL IN BEAM SPANS (M270, Gr. 345W)".

If anchor bolts are drilled into cap, top reinforcing bars shall be properly placed to avoid damage. For "Anchor Bolt Detail", see Drwg. No. 40481.

For additional information, see layout.

STATE OF ARKANSAS
Edward T. Fain
REGISTERED PROFESSIONAL ENGINEER
No. 3915
3-21-00
EDWARD T. FAIN

BRIDGE ENGINEER

(SHEET 3 OF 3)

DETAILS OF END BENTS
RICHLAND CREEK

ROUTE 45 SEC. 5

ARKANSAS STATE HIGHWAY COMMISSION

LITTLE ROCK, ARK.

DRAWN BY: TEB DATE: 11/8/99 FILENAME: B040230x2.BII
CHECKED BY: AMS DATE: 3/20/00 SCALE: As Noted
DESIGNED BY: AMS DATE: 10/7/99

BRIDGE NO. 06790 DRAWING NO. 40472

METRIC

MICROFILMED
APR 11 2003

DATE REVISED	DATE FILMED	DATE REVISED	DATE FILMED	FED. ROAD DIST. NO.	STATE	FED. AID PROJ. NO.	SHEET NO.	TOTAL SHEETS
				6	ARK.			
				JOB NO.		040230	59	143
				1	06790	BENT DETAILS	40473	

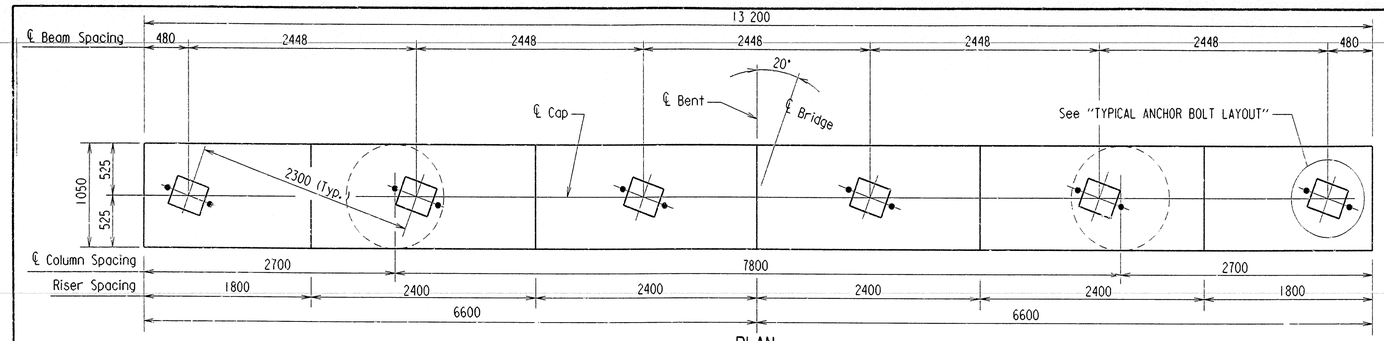

PLAN
1:30

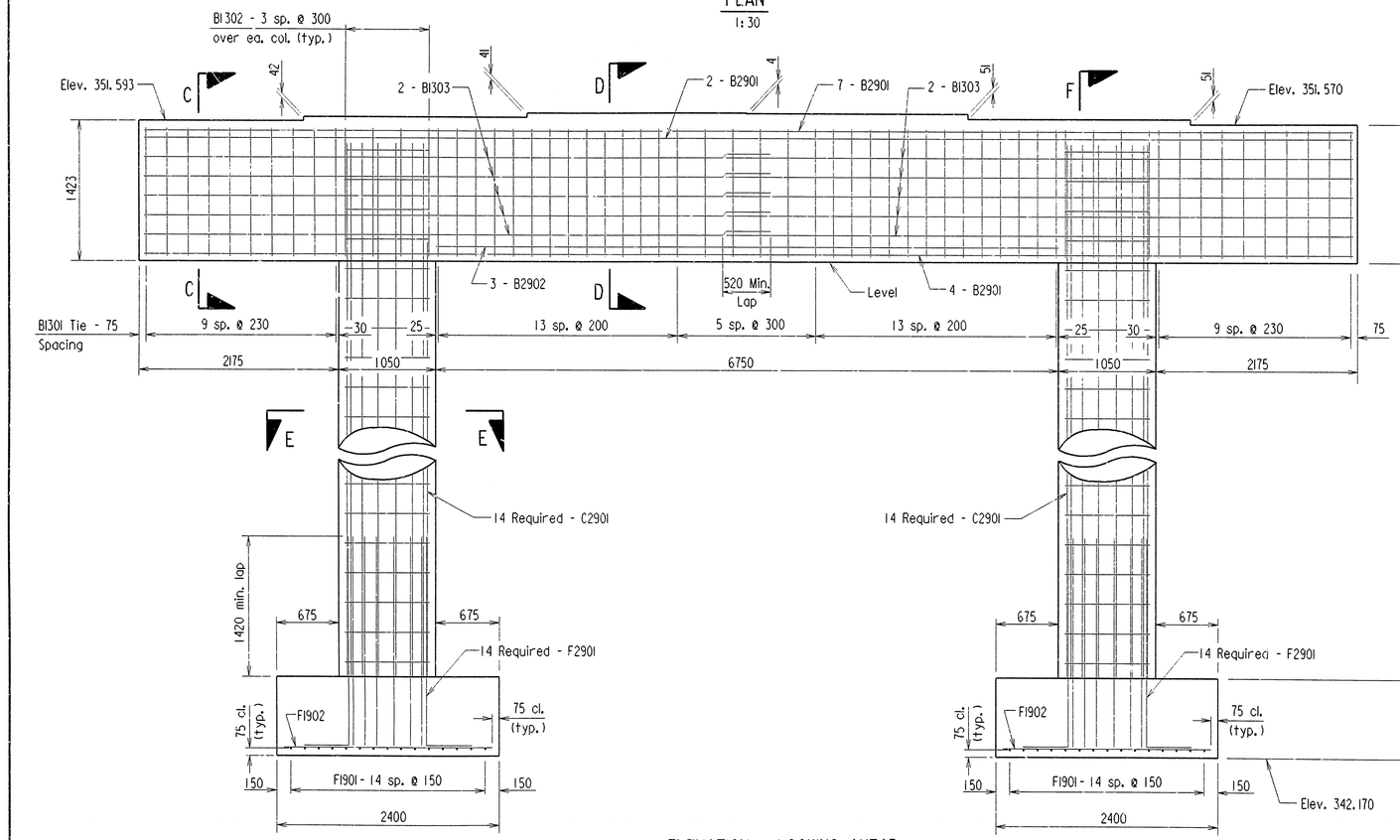

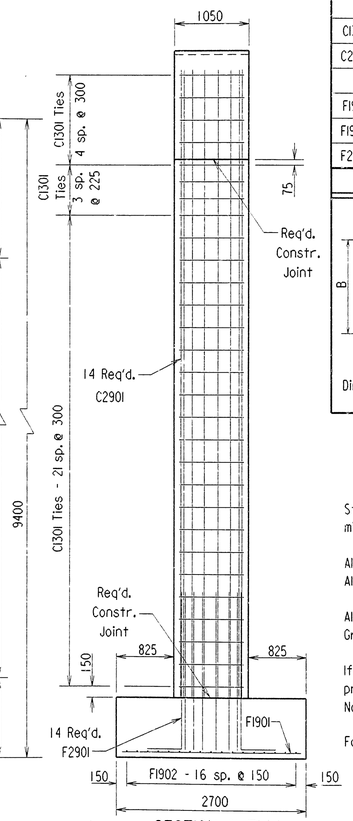

SECTION F-F
1:40

BAR LIST

MARK	NUMBER REQUIRED	LENGTH	A	B	PIN. DIA.
B1301	52	4610	950	1300	50
B1302	8	3500	950	1300	50
B1303	20	6810	—	—	Str.
B2901	13	13 100	—	—	Str.
B2902	3	6750	—	—	Str.
C1301	58	3220	—	—	76
C2901	28	8400	—	—	Str.
F1901	30	2550	—	—	Str.
F1902	34	2250	—	—	Str.
F2901	28	2860	2450	490	228

BENDING DIAGRAMS

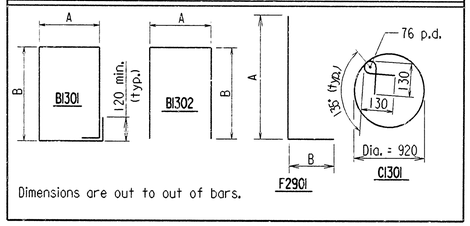

Dimensions are out to out of bars.

GENERAL NOTES

Stations and elevations are in meters. All other dimensions are in millimeters unless otherwise noted.

All Concrete shall be Class "S" and shall be poured in the dry. All exposed corners to be chamfered 20 mm unless otherwise noted.

All Reinforcing Steel shall conform to ASTM A615/A615M-96a, Grade 420 (fy = 420 MPa.)

If Anchor Bolts are drilled into cap, top reinforcing bars shall be properly placed to avoid damage. See "Anchor Bolt Detail", Drwg. No. 40481.

For additional information, see Layout.

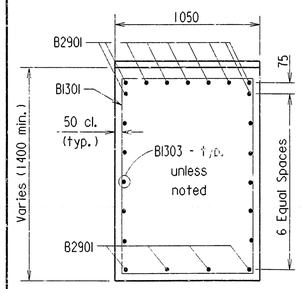

SECTION C-C
1:20

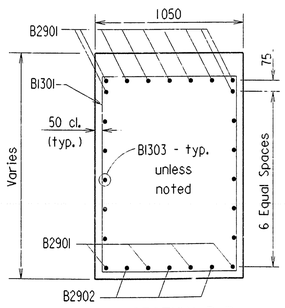

SECTION D-D
1:20

ELEVATION - LOOKING AHEAD
1:30

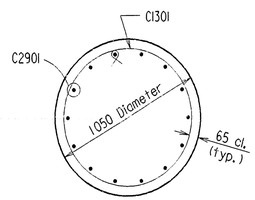

SECTION E-E
1:20

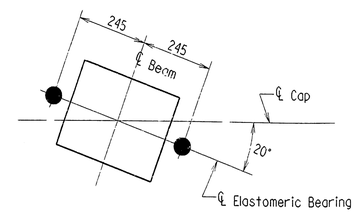

Note: For details of Elastomeric Bearings, see drwg. no. 40481.

TYPICAL ANCHOR BOLT LAYOUT
1:10

STATE OF ARKANSAS
Edward T. Fain
REGISTERED PROFESSIONAL ENGINEER
No. 3915
11-23-99
EDWARD T. FAIN

BRIDGE ENGINEER

MICROFILMED
APR 11 2000

DETAILS OF INTERMEDIATE BENT NO. 2 RICHLAND CREEK

ROUTE 45 SEC. 5

ARKANSAS STATE HIGHWAY COMMISSION

LITTLE ROCK, ARK.

DRAWN BY: TEB DATE: 11/05/99 FILENAME: B040230X2.BI2
CHECKED BY: JWB DATE: 11/12/99 SCALE: As Noted
DESIGNED BY: AMS DATE: 10/6/99
BRIDGE NO. 06790 DRAWING NO. 40473

METRIC

DATE REVISED	DATE FILMED	DATE REVISED	DATE FILMED	FED. ROAD DIST. NO.	STATE	FED. AID PROJ. NO.	SHEET NO.	TOTAL SHEETS
				6	ARK.			
				JOB NO.		040230	60	143
				1	06790	BENT DETAILS		40474

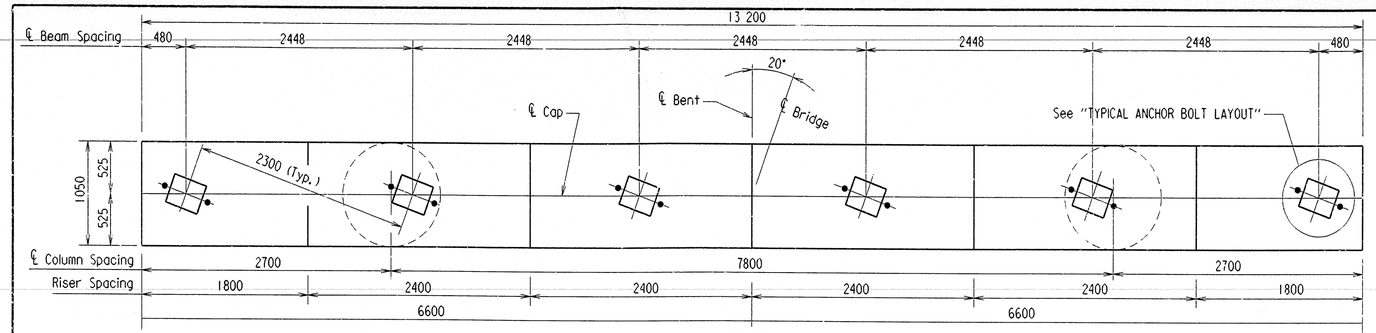

PLAN
1:30

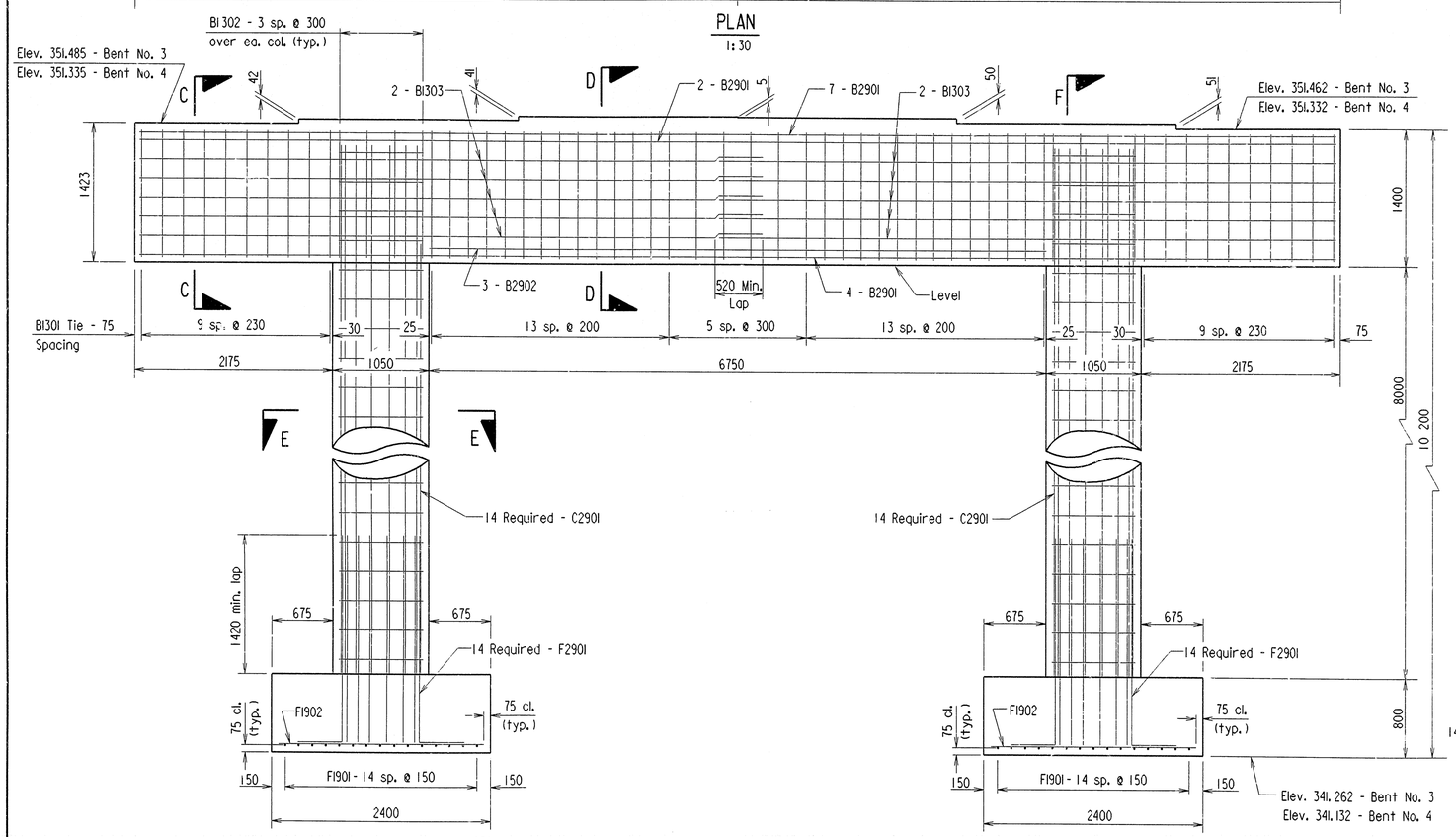

ELEVATION - LOOKING AHEAD
1:30

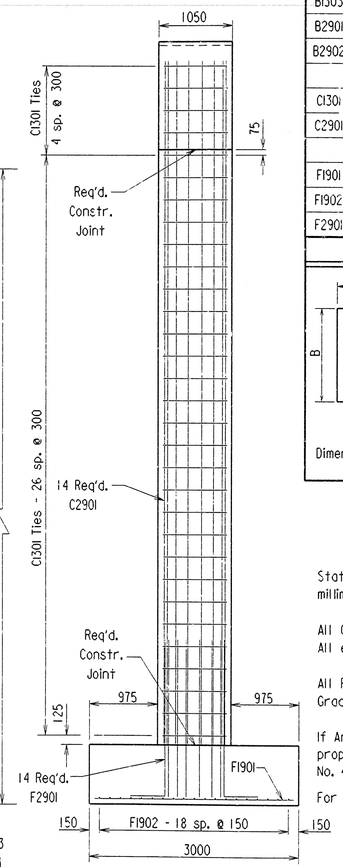

SECTION F-F
1:40

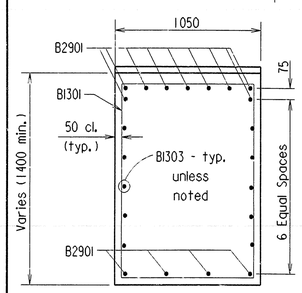

SECTION C-C
1:20

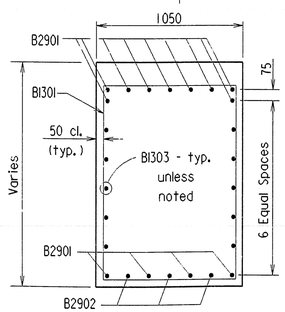

SECTION D-D
1:20

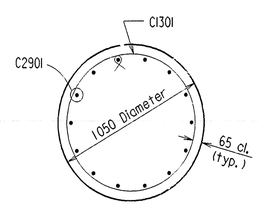

SECTION E-E
1:20

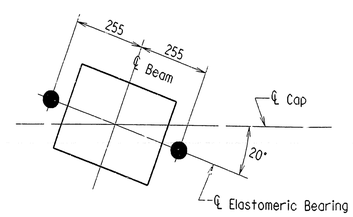

Note: For details of Elastomeric Bearings, see drwg. no. 40481.

TYPICAL ANCHOR BOLT LAYOUT
1:10

BAR LIST

MARK	NUMBER REQUIRED	LENGTH	A	B	PIN. DIA.
B1301	52	4610	950	1300	50
B1302	8	3500	950	1300	50
B1303	20	6810	—	—	Str.
B2901	13	13 100	—	—	Str.
B2902	4	6750	—	—	Str.
C1301	62	3220	—	—	76
C2901	28	9200	—	—	Str.
F1901	30	2850	—	—	Str.
F1902	38	2250	—	—	Str.
F2901	28	2860	2450	490	228

BENDING DIAGRAMS

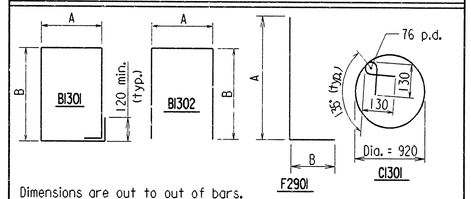

Dimensions are out to out of bars.

GENERAL NOTES

Stations and elevations are in meters. All other dimensions are in millimeters unless otherwise noted.

All Concrete shall be Class "S" and shall be poured in the dry. All exposed corners to be chamfered 20 mm unless otherwise noted.

All Reinforcing Steel shall conform to ASTM A615/A615M-96a, Grade 420 (fy = 420 MPa.)

If Anchor Bolts are drilled into cap, top reinforcing bars shall be properly placed to avoid damage. See "Anchor Bolt Detail", Drwg. No. 40481.

For additional information, see Layout.

STATE OF ARKANSAS
Edward T. Fain
REGISTERED PROFESSIONAL ENGINEER
No. 3915
11-23-99
EDWARD T. FAIN
BRIDGE ENGINEER

DETAILS OF INTERMEDIATE BENT NOS. 3 AND 4 RICHLAND CREEK

ROUTE 45 SEC. 5

ARKANSAS STATE HIGHWAY COMMISSION

LITTLE ROCK, ARK.

DRAWN BY: TEB DATE: 11/05/99 FILENAME: B040230X2.BI2
CHECKED BY: JWB DATE: 11/12/99 SCALE: As Noted
DESIGNED BY: AMS DATE: 10/6/99

BRIDGE NO. 06790 DRAWING NO. 40474

METRIC D

MICROFILMED
APR 11 2000

DATE REVISED	DATE FILMED	DATE REVISED	DATE FILMED	FED. ROAD DIST. NO.	STATE	FED. AID PROJ. NO.	SHEET NO.	TOTAL SHEETS
				6	ARK.	-		
				JOB NO.		040230	61	143
				(1) 06790		BENT DETAILS		40475

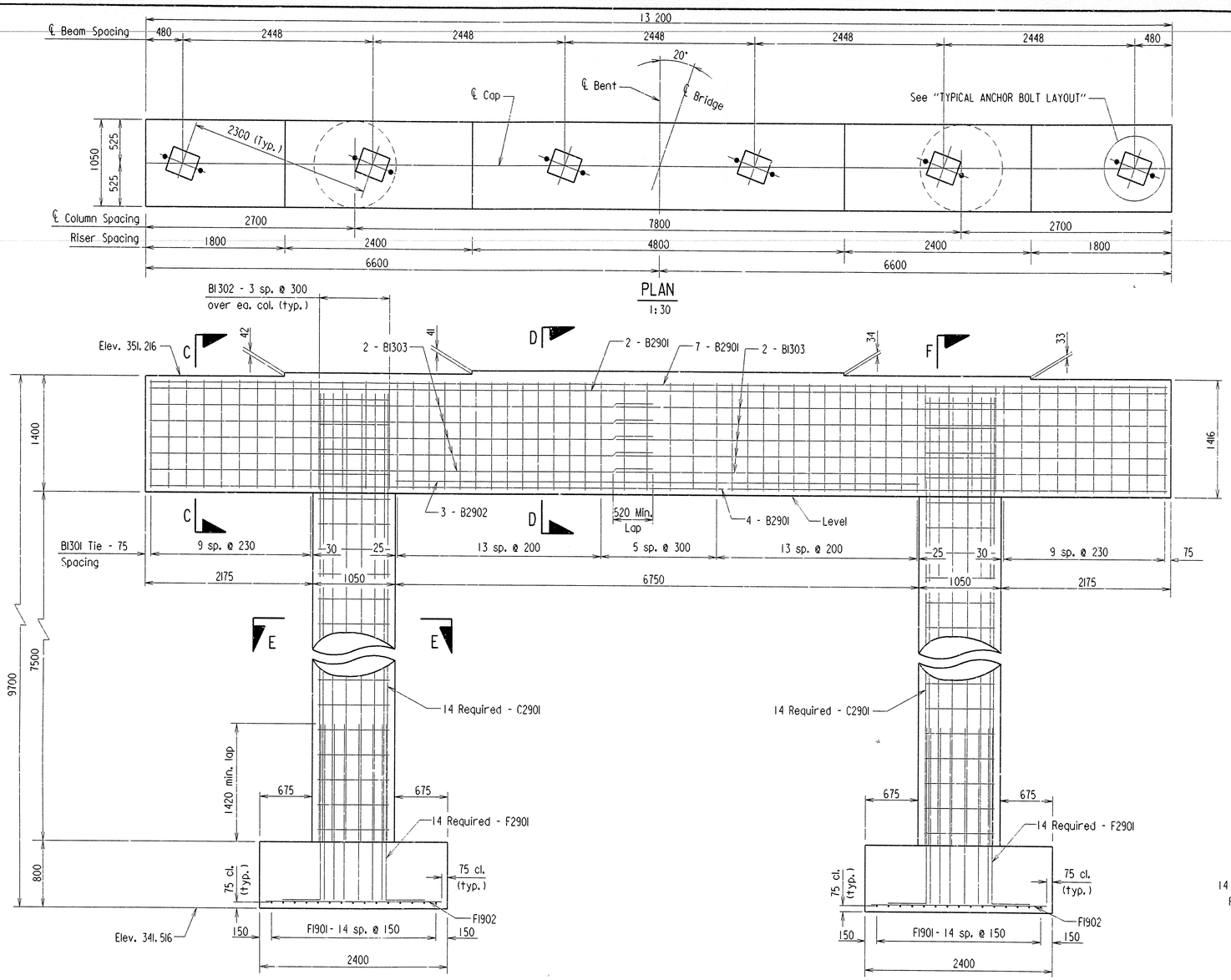

PLAN
1:30

ELEVATION - LOOKING AHEAD
1:30

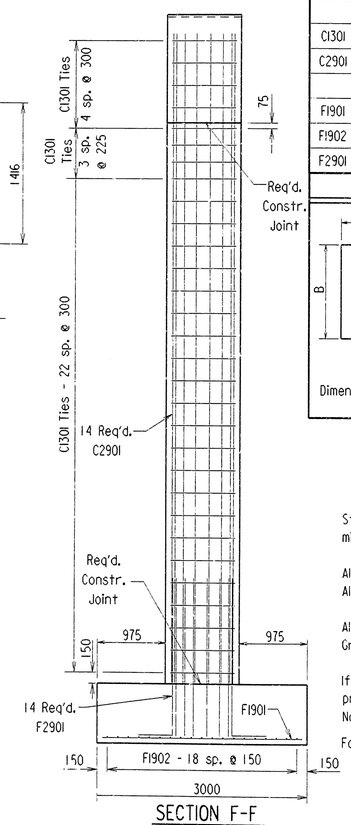

SECTION F-F
1:40

BAR LIST

MARK	NUMBER REQUIRED	LENGTH	A	B	PIN. DIA.
B1301	52	4610	950	1300	50
B1302	8	3500	950	1300	50
B1303	20	6810	—	—	Str.
B2901	13	13 100	—	—	Str.
B2902	4	6750	—	—	Str.
C1301	60	3220	—	—	76
C2901	28	8700	—	—	Str.
F1901	30	2850	—	—	Str.
F1902	38	2250	—	—	Str.
F2901	28	2860	2450	490	228

BENDING DIAGRAMS

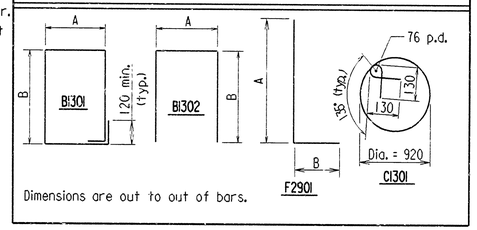

Dimensions are out to out of bars.

GENERAL NOTES

Stations and elevations are in meters. All other dimensions are in millimeters unless otherwise noted.

All Concrete shall be Class "S" and shall be poured in the dry. All exposed corners to be chamfered 20 mm unless otherwise noted.

All Reinforcing Steel shall conform to ASTM A615/A615M-96a, Grade 420 (fy = 420 MPa.)

If Anchor Bolts are drilled into cap, top reinforcing bars shall be properly placed to avoid damage. See "Anchor Bolt Detail", Drwg. No. 40481.

For additional information, see Layout.

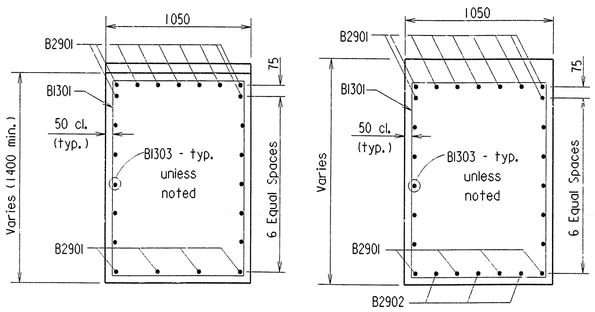

SECTION C-C
1:20

SECTION D-D
1:20

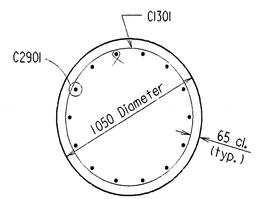

SECTION E-E
1:20

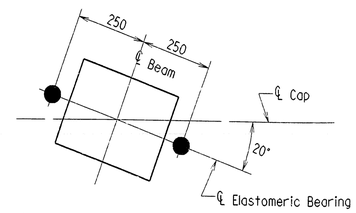

Note: For details of Elastomeric Bearings, see drwg. no. 40481.

TYPICAL ANCHOR BOLT LAYOUT
1:10

STATE OF ARKANSAS
Edward T. Fain
REGISTERED PROFESSIONAL ENGINEER
No. 3915
11-23-99
EDWARD T. FAIN

BRIDGE ENGINEER

DETAILS OF INTERMEDIATE BENT NO. 5 RICHLAND CREEK

ROUTE 45 SEC. 5

ARKANSAS STATE HIGHWAY COMMISSION

LITTLE ROCK, ARK.

DRAWN BY: TEB DATE: 11/05/99 FILENAME: B040230X2.B12
CHECKED BY: TWB DATE: 11/12/99 SCALE: As Noted
DESIGNED BY: AMS DATE: 10/6/99

BRIDGE NO. 06790 DRAWING NO. 40475

METRIC D

MICROFILMED APR 11 2000

DATE REVISED	DATE FILMED	DATE REVISED	DATE FILMED	FED. ROAD DIST. NO.	STATE	FED. AID PROJ. NO.	SHEET NO.	TOTAL SHEETS
				6	ARK.			
				JOB NO.		040230	62	143
				1	06790	SPAN DTLS.	40476	

Note: At Contractor's option, in lieu of providing bar S1601E, one #16 bar in top and bottom may be substituted. Payment for reinforcing will be based on the weight of bar S1601E. Bars in top and bottom mat shall be epoxy coated.

△ Values shown are for 2% peaked crown. Dimensions for Working Point to Top of Roadway Surface varies from 8 mm at Sta. 22+13.733 to 4 mm at Sta. 22+40.500.

Note: All bars designated with an "E" suffix are to be epoxy coated.

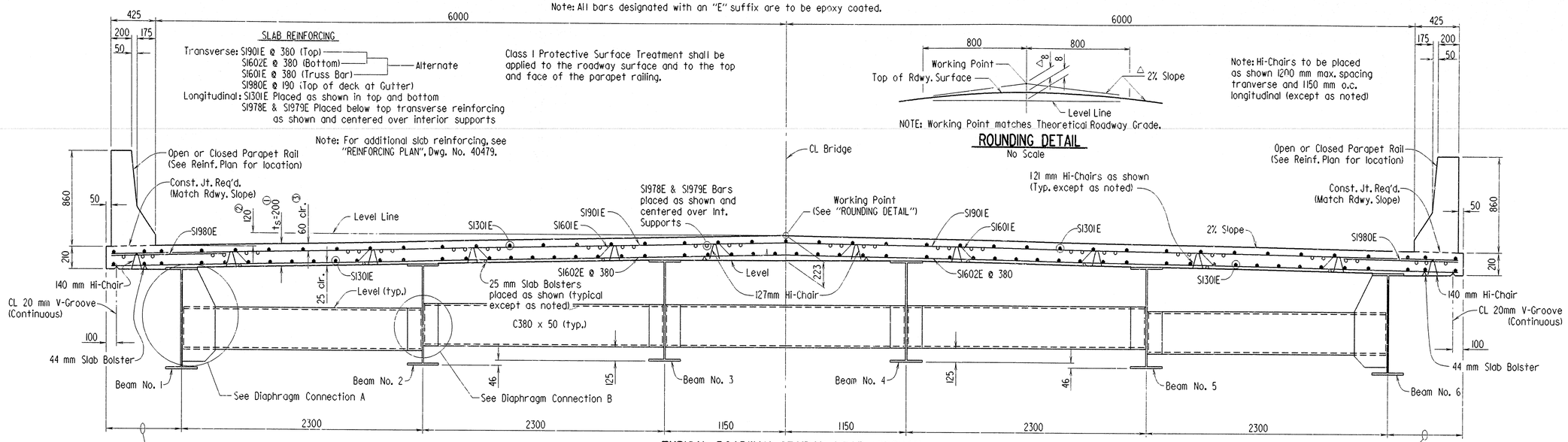

TYPICAL ROADWAY SECTION NEAR MIDSPAN

Scale: 1 : 20

Beginning of Bridge to Sta. 22 + 13.733
For Roadway Section in Superelevation Transition, see dwg. No. 40478.

NOTE: Working Point matches Theoretical Roadway Grade.

ROUNDING DETAIL

No Scale

Note: Hi-Chairs to be placed as shown 1200 mm max. spacing tranverse and 1150 mm o.c. longitudinal (except as noted)

① See "ADJUSTMENT FOR SLAB THICKNESS TOLERANCE WHEN REMOVEABLE DECK FORMING IS USED".

② Working Point to Gutterline

③ Tolerance : Minus = 6 mm
Plus = The amount of slab thickening used to meet slab thickness tolerances. See "ADJUSTMENT FOR SLAB THICKNESS TOLERANCE WHEN REMOVEABLE DECK FORMING IS USED".

EXPANSION DEVICE

Rdwy. Channel C 380 x 50
Conn. Angles Split C380 X 50
For Details of Strip Seal Joint, see Dwg. No. 40466
16 mm ø x 200 mm Studs @ 300

Note: Detail device 4 mm high and provide 8 mm shims using one 4 mm PL and two 2 mm PL's.

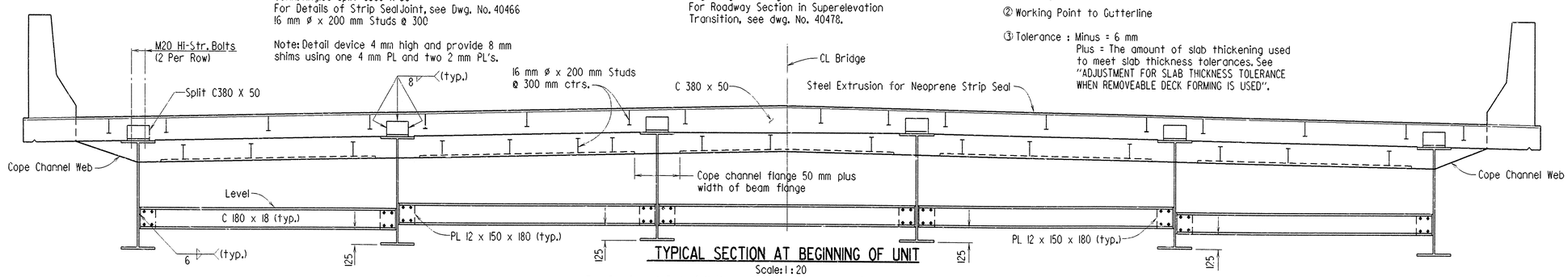

TYPICAL SECTION AT BEGINNING OF UNIT

Scale: 1 : 20

For Section at End of Unit, see Roadway Cross-slope Transition Details on Dwg. No. 40478.

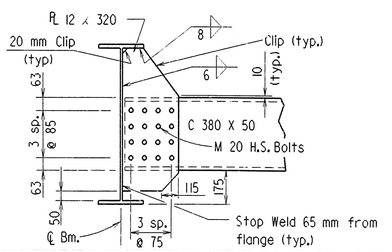

TENSION FLANGE ON BOTTOM

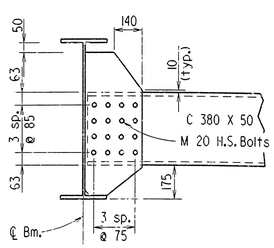

TENSION FLANGE ON TOP

Note: Bolts in Diaphragm Connections shall be properly installed and tightened in accordance with Subsection 807.71 of the Standard Specifications.

DIAPHRAGM CONNECTION A

No Scale

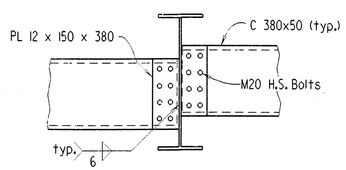

DIAPHRAGM CONNECTION B

No Scale

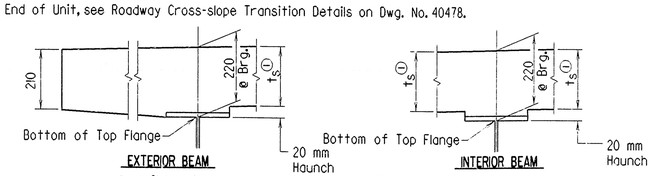

t_s = Slab thickness as shown shown on "TYPICAL ROADWAY SECTION".

① Tolerance when removable deck forming is used is + 12 mm and - 6 mm. Haunch forming is required and shall be adjusted to maintain slab thickness tolerance.

Haunch dimension may vary within the following limits to maintain grade and slab thickness tolerance: Minimum - occurs when top flange contacts bottom reinforcing steel; Maximum - top flange thickness plus 45 mm. No increase in concrete and structural steel quantities will be made to maintain tolerance.

ADJUSTMENT FOR SLAB THICKNESS TOLERANCE WHEN REMOVEABLE DECK FORMING IS USED

No Scale

Note: Tolerances shown are applicable only when removable deck forming is used. See Std. Drwg. 36515 for tolerance when permanent steel deck forms are used. Payment for concrete shall be based on removable deck forming.

All dimensions are in millimeters (mm) unless otherwise noted.

STATE OF ARKANSAS
Edward T. Fain
REGISTERED PROFESSIONAL ENGINEER
No. 3915
11-23-99
EDWARD T. FAIN

BRIDGE ENGINEER

MICROFILMED
APR 11 2000

SHEET 1 OF 5
DETAILS OF
107 m CONTINUOUS COMPOSITE W-BEAM UNIT
RICHLAND CREEK
WASHINGTON COUNTY
ROUTE 45 SEC. 5
ARKANSAS STATE HIGHWAY COMMISSION
LITTLE ROCK, ARK.

DRAWN BY: MJT DATE: 9/9/99 FILENAME: B040230X2.SI
CHECKED BY: AMS DATE: 9/99 SCALE: As Shown
DESIGNED BY: AMS DATE: 11/8/99
BRIDGE NO. 06790 DRAWING NO. 40476

A H METRIC D

DATE REVISED	DATE FILMED	DATE REVISED	DATE FILMED	FED. ROAD DIST. NO.	STATE	FED. AID PROJ. NO.	SHEET NO.	TOTAL SHEETS
				6	ARK.			
				JOB NO.		040230	63	143
				1	06790	SPAN DETAILS	40477	

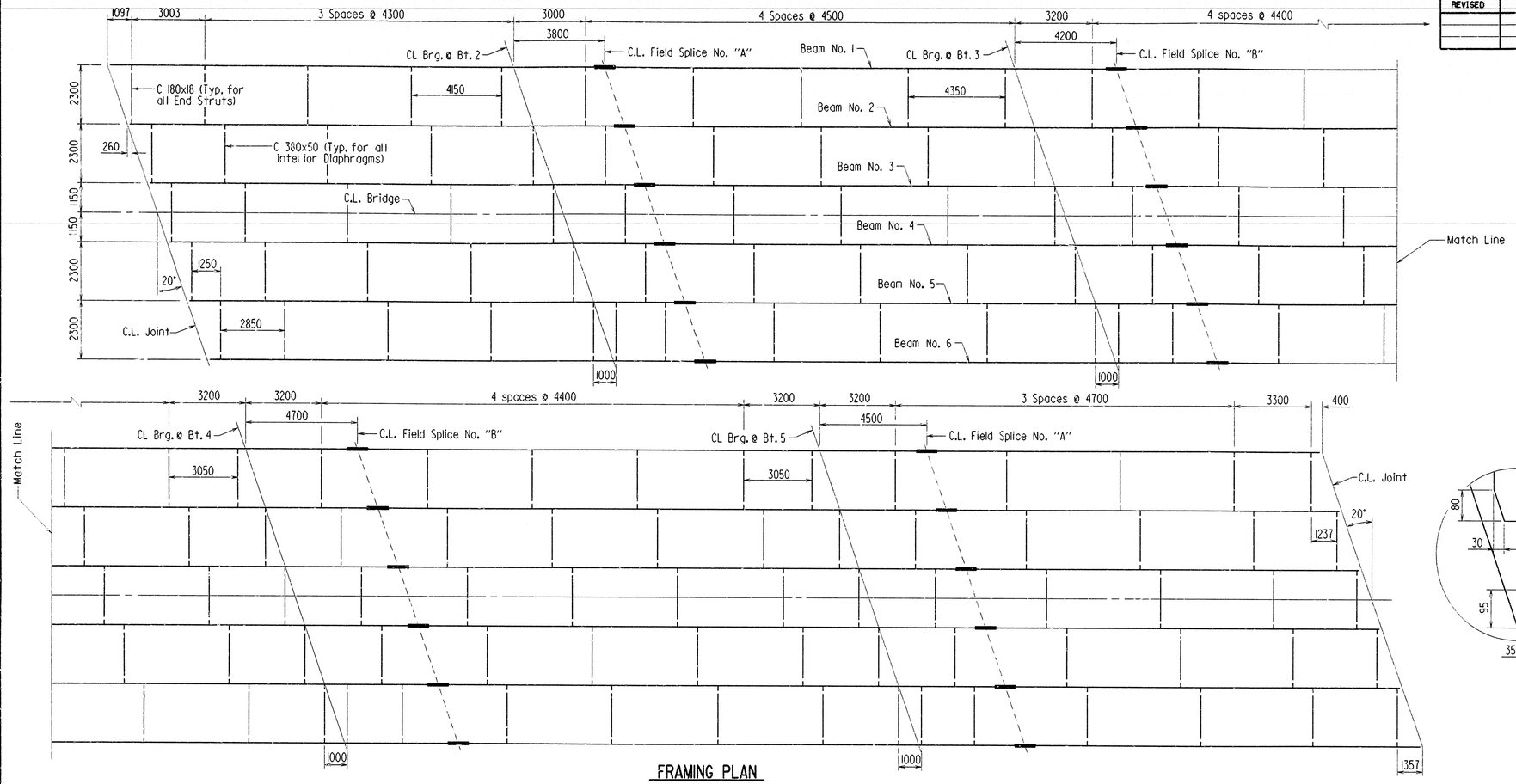

FRAMING PLAN

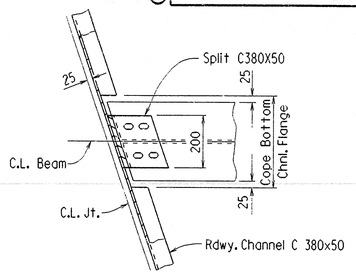

CHANNEL CONNECTION DETAIL

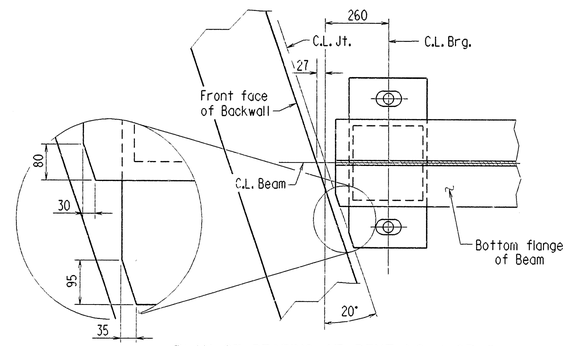

PLAN OF BEARING AT BENT NO. 1 OR 6

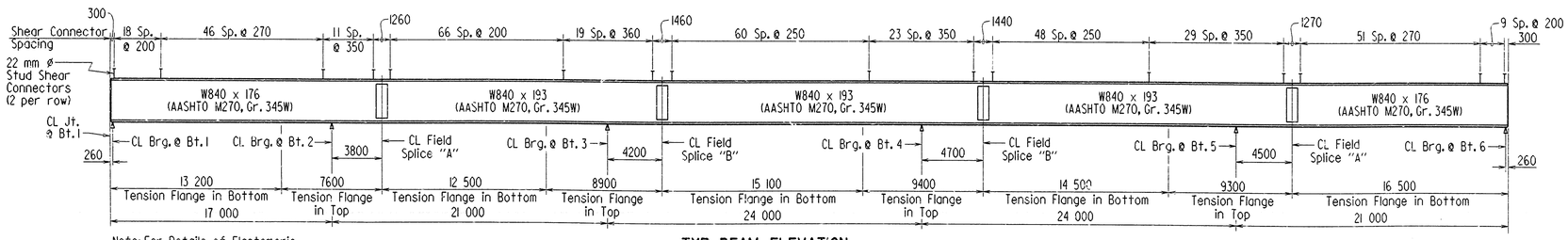

Note: For Details of Elastomeric Bearings, see drwg. no. 40481.

TYP. BEAM ELEVATION

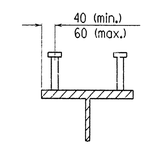

SHEAR CONNECTOR DETAIL

Stud Shear Connectors shall be 22 mm ø x 100 mm long, granular flux filled, solid fluxed or equal, and automatically end welded to the beam flange in accordance with the recommendations of the Manufacturer. 20 mm ø studs may be used in place of the 22 mm ø studs shown, at the ratio of 1.361 -20 mm ø studs in place of one 22 mm ø stud. 22 mm ø studs will be used as basis for measurement of structural steel in shear connectors. Maximum stud spacing = 600 mm.

All dimensions are in millimeters (mm) unless otherwise noted.

MICROFILMED

APR 11 2000

TABLE FOR WELD

Material Thickness of Thicker Part Joined	Minimum Size of Fillet Weld	Single Pass Weld Must Be Used
To 20 mm Inclusive	6 mm	
Over 20 mm	8 mm	

NOTE: When a fillet weld size, as shown on the plans, is larger than the minimum, the first pass shall be that specified for minimum size of fillet weld.

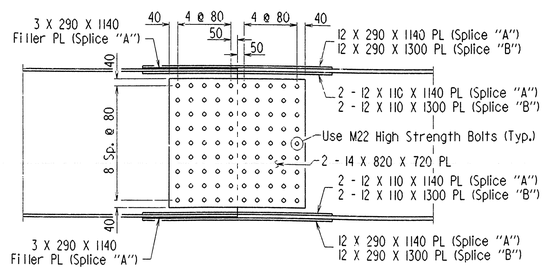

Note: All field splice plates to be AASHTO M270, Grade 345W steel.

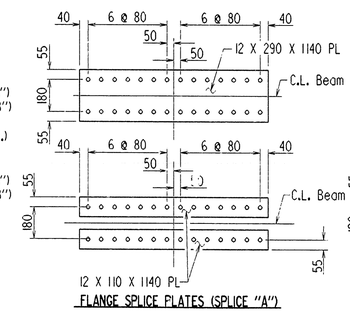

FLANGE SPLICE PLATES (SPLICE "A")

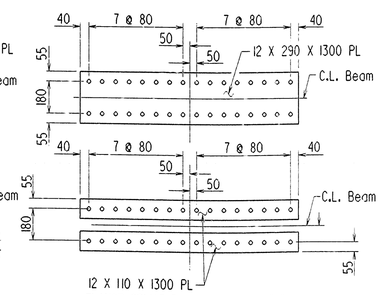

FLANGE SPLICE PLATES (SPLICE "B")

DETAILS OF FIELD SPLICES

STATE OF ARKANSAS
Edward T. Fain
REGISTERED PROFESSIONAL ENGINEER
No. 3915
11-23-99
EDWARD T. FAIN

BRIDGE ENGINEER

SHEET 2 OF 5
DETAILS OF
107 m CONTINUOUS COMPOSITE W-BEAM UNIT
RICHLAND CREEK
WASHINGTON COUNTY
ROUTE SEC.

ARKANSAS STATE HIGHWAY COMMISSION

LITTLE ROCK, ARK.

DRAWN BY: MJT DATE: 9/28/99 FILENAME: B040230X2.S2
CHECKED BY: AMS DATE: 11/17/99 SCALE: Not to scale
DESIGNED BY: AMS DATE: 9/99

BRIDGE NO. 06790 DRAWING NO. 40477

A H METRIC D

DATE REVISED	DATE FILMED	DATE REVISED	DATE FILMED	FED. ROAD DIST. NO.	STATE	FED. AID PROJ. NO.	SHEET NO.	TOTAL SHEETS
				6	ARK.			
				JOB NO.		040230	64	143
				1	06790	SPAN DTLS.	40478	

SUPERSTRUCTURE GENERAL NOTES

CONSTRUCTION SPECIFICATIONS: Arkansas State Highway and Transportation Department Standard Specifications for Highway Construction, 1996 edition, with applicable supplemental specifications and special provisions. Unless otherwise noted, references to Section and subsection numbers in the plans refer to the Construction Specifications.

DESIGN SPECIFICATIONS: AASHTO Standard Specifications for Highway Bridges, 1996 edition, with current interim specifications.

LIVE LOADING: MS18 METHOD OF DESIGN: LOAD FACTOR

MATERIALS AND STRENGTHS:
Concrete: All concrete used in the Parapet Railing shall be Class S(AE) with minimum 28 day compressive strength f'c = 28.0 MPa and shall be poured in the dry.
All concrete used in the Deck shall be SRA Modified Class S(AE) Concrete with minimum 28 day compressive strength f'c = 28.0 MPa and shall be poured in the dry.

Structural Steel: AASHTO M270, Gr. 345W (fy=345 MPa)
AASHTO M270, Gr. 250 (fy=250 MPa).

STRUCTURAL STEEL:
All structural steel shall be AASHTO M270, Gr. 345W unless otherwise noted and shall be paid for as "Structural Steel in Beam Spans (M270, Gr. 345W)". M270, Gr. 345W steel shall not be painted. All exposed surfaces to be cleaned in accordance with subsection 807.84(e). Structural steel completely embedded in concrete may be AASHTO M270, Gr. 250.

Structural shapes of equal or greater strength may be substituted for shapes shown if approval is obtained from the Bridge Engineer. Payment will be made on the basis of shapes shown.

Longitudinal beams are considered main load carrying members and shall meet the Longitudinal Charpy V-Notch Test specified in Section 807.05. The Charpy V-Notch Test will not be required on field splice plates.

Flange field splice plates shall be cut and fabricated so that the primary direction of rolling is parallel to the direction of the main tensile and/or compressive stresses.

All beams shall be blocked in their true position in the shop in groups of a minimum of three sections. Beams shall be blocked with webs horizontal. See Section 807.54 (b)(1). The camber, length of sections, distance between bearings, and openings of joints shall be measured with the beams in their true position. This information shall become a part of the permanent records of this job. The component parts shall be match-marked in this assembly and these marks shall be shown on the erection diagram. All beam dimensions are based on a temperature of 16°C. A tolerance of +/- 6 mm is allowed for camber.

Elastomeric Bearings shall be firmly seated in accordance with subsection 808.08. This work to be considered subsidiary to the item "Elastomeric Bearings" and will not be paid for directly.

Field connections shall be bolted with high strength bolts and shall be M20 bolts unless otherwise noted. Bolts shall be placed with heads on the outside face of the exterior beam webs and on bottom of beam flanges.

Holes for M20 high strength bolts in expansion devices, end struts, and diaphragms may be 24 mm ø if a washer is supplied for use under both the nut and the head of the bolt.

Diaphragms and End Struts shall be installed as beams are erected and shall be completely bolted prior to pouring of the concrete deck.

All welding that is to be done during fabrication of structural steel, including temporary welds, shall be detailed on the shop drawings and submitted for approval. If the Contractor or Erector should want to make additional welds, whether temporary or permanent, he shall submit detailed drawings with a formal request to the Bridge Engineer for approval. All welding shall conform to subsection 807.26.

Drawings show general features of design only. Shop drawings shall be made in accordance with the specifications, submitted, and approval secured before fabrication is begun.

REINFORCING STEEL:
The reinforcing steel shall be accurately located in the forms and firmly held in place by steel wire supports sufficient in size and number to prevent displacement during the course of construction. The wire supports will not be paid for directly but will be considered subsidiary to the item of "Reinforcing Steel - Bridge".

CONCRETE:
Concrete in bridge superstructure shall be placed and consolidated for the entire pour before any concrete has taken its initial set. This may require the use of a retarding agent. The concrete bridge deck shall be given a tine finish as specified for final finishing in subsection 802.19 for a Class 5 Tined Bridge Roadway Surface Finish. Movement of the finishing machine across the new concrete shall be on planks placed on the surface and shall be prohibited for 72 hours after finishing the pour. Sufficient concrete must be placed ahead of the strike-off to fully load the beam. If a longitudinal strike-off is used, a vertical camber adjustment must be made in the strike-off to account for the future dead load deflection caused by the railing. A minimum of 72 hours shall elapse between completion of the slab and the pouring of the parapet railing.

The superstructure details shown are for when removeable deck forming is used and are the basis for measurement of SRA Modified Class S(AE) Concrete. See Standard Drawing No. 36515 for allowable modifications and for tolerance when permanent steel bridge deck forms are used.

All exposed corners to be chamfered 20 mm unless otherwise noted.

LOADS TO BEAMS:	Int. Beam	Ext. Beam
Dead Load:		
To W-Beam	11.08 kN/m + 1.3(wt. of W-Bm.)	9.01 kN/m + 1.3(wt. of W-Bm.)
To Composite Beam	4.18 kN/m *	4.18 kN/m *

*Includes 2.30 kN/m Future Wearing Surface.

Live Load:
To Composite Beam — Int. Bm. = 1.372 wheels (+) impact
Ext. Bm. = 1.282 wheels (+) impact

Notes: See Layout for Method of Superelevation Transition.
For Details not otherwise shown, see the Roadway Section on drwg. No. 40476. Slab Reinforcing is same as shown in TYPICAL ROADWAY SECTION except Hi - Chairs and Slab Bolsters vary in height with change in roadway slope.

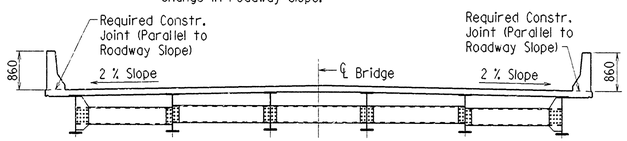

*Beginning of normal 12 m Clear Roadway

STA. 21+48.200* TO STA. 22+13.733

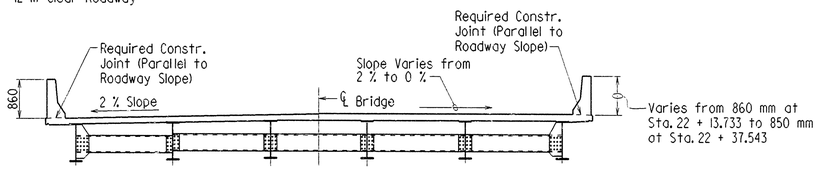

STA. 22+13.733 TO STA. 22+37.543

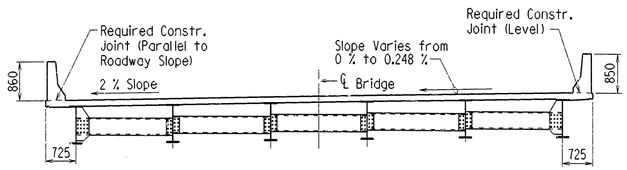

STA. 22+37.543 TO STA. 22+40.500

ROADWAY CROSS-SLOPE TRANSITION (LOOKING AHEAD)

TABLE OF DEFLECTIONS (mm)

Camber for Dead Load Deflection plus Vertical curve ± 6mm tolerance.
Deflections shown are from a chord from C.L. Bearing to C.L. Bearing
Negative sign (-) indicates upward deflection.

Span	Point of Deflection	Structural Steel		Structural Steel + Slab		Structural Steel + Slab + Parapet	
		Int. Bm	Ext. Bm.	Int. Bm	Ext. Bm.	Int. Bm	Ext. Bm.
Span 1	1.0	0	0	0	0	0	0
	1.1	1	1	4	4	5	5
	1.2	1	1	8	7	9	8
	1.3	2	2	11	10	12	11
	1.4	2	2	12	11	13	12
	1.5	2	2	12	10	13	11
	1.6	1	1	10	9	11	10
	1.7	1	1	7	6	8	7
	1.8	1	1	4	4	5	4
	1.9	0	0	1	1	2	1
Span 2	2.0	0	0	0	0	0	0
	2.1	0	0	1	1	1	1
	2.2	1	1	4	3	5	4
	2.3	1	1	7	6	8	7
	2.4	2	1	9	8	10	9
	2.5	2	2	10	8	11	9
	2.6	1	1	8	7	9	8
	2.7	1	1	6	5	6	5
	2.8	0	0	3	2	3	2
	2.9	0	0	0	0	0	0
Span 3	3.0	0	0	0	0	0	0
	3.1	1	1	4	4	5	4
	3.2	2	2	11	9	12	10
	3.3	3	3	18	15	20	17
	3.4	4	3	23	19	25	21
	3.5	4	4	24	20	26	22
	3.6	4	3	22	18	24	20
	3.7	3	3	17	14	19	16
	3.8	2	2	10	9	11	9
	3.9	1	1	4	3	4	3
Span 4	4.0	0	0	0	0	0	0
	4.1	0	0	2	1	2	2
	4.2	1	1	7	6	7	6
	4.3	2	2	12	10	13	11
	4.4	3	3	16	13	17	15
	4.5	3	3	17	14	19	16
	4.6	3	3	16	13	17	15
	4.7	2	2	11	10	13	11
	4.8	1	1	6	5	7	6
	4.9	0	0	1	1	1	1
Span 5	5.0	0	0	0	0	0	0
	5.1	0	0	4	3	4	3
	5.2	1	1	10	8	11	9
	5.3	2	2	17	14	19	16
	5.4	3	3	24	20	26	22
	5.5	4	4	28	23	30	25
	5.6	4	4	28	24	31	26
	5.7	4	4	26	21	28	23
	5.8	3	3	19	16	21	18
	5.9	2	1	11	9	11	10
	6.0	0	0	0	0	0	0

All dimensions are in millimeters (mm) unless otherwise noted.

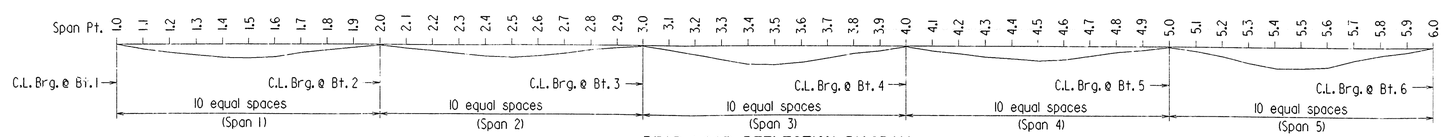

DEAD LOAD DEFLECTION DIAGRAM
No Scale

MICROFILMED
APR 11 2000

STATE OF ARKANSAS
Edward T. Fain
REGISTERED PROFESSIONAL ENGINEER
No. 3915
2-15-00
EDWARD T. FAIN

BRIDGE ENGINEER

SHEET 3 OF 5
DETAILS OF
107 m CONTINUOUS COMPOSITE W-BEAM UNIT
RICHLAND CREEK
WASHINGTON COUNTY
ROUTE 45 SEC. 5
ARKANSAS STATE HIGHWAY COMMISSION
LITTLE ROCK, ARK.

DRAWN BY: MJT DATE: 9/15/99 FILENAME: B040230X2.S3
CHECKED BY: AMS DATE: 2/15/00 SCALE: As Shown
DESIGNED BY: AMS DATE: 9/99
BRIDGE NO. 06790 DRAWING NO. 40478

METRIC

DATE REVISED	DATE FILMED	DATE REVISED	DATE FILMED	F.A.D. ROAD DIST. NO.	STATE	FED. AID PROJ. NO.	SHEET NO.	TOTAL SHEETS
				6	ARK.			
				JOB NO.		040230	65	143
				06790		Span Details	40479	

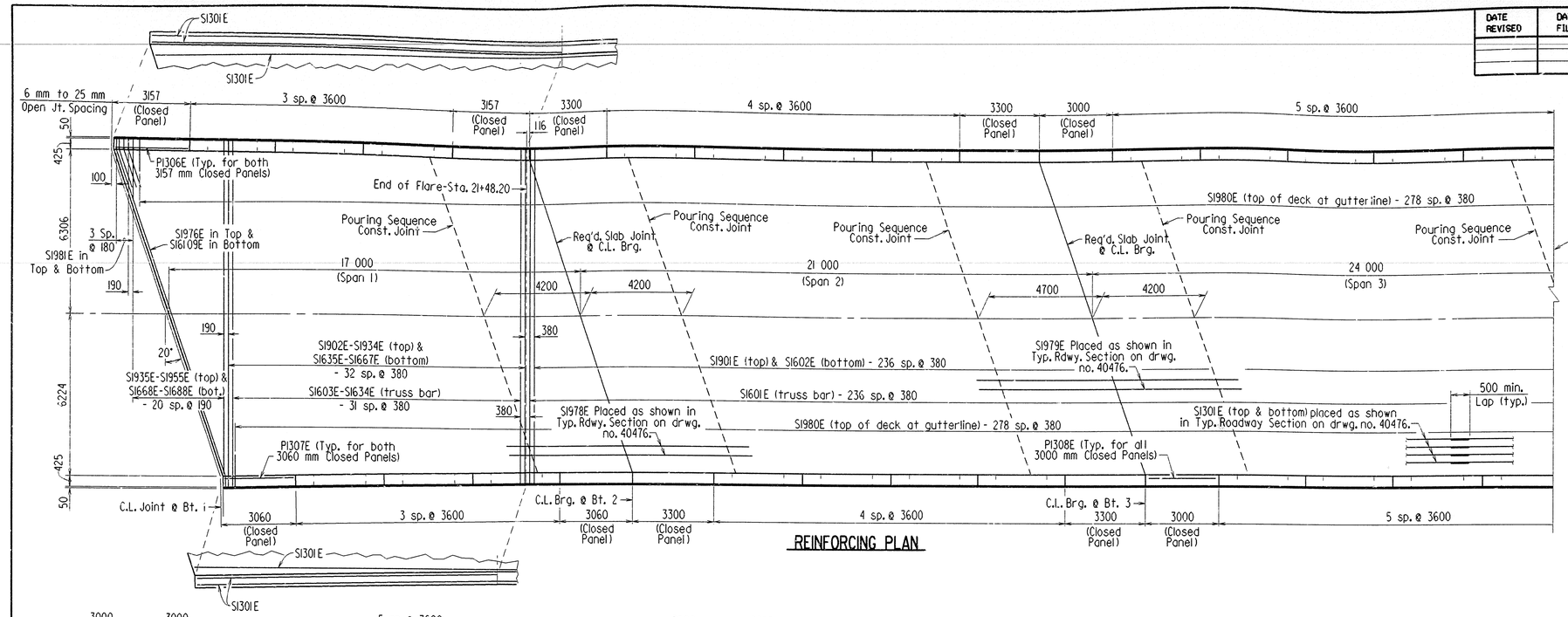

REINFORCING PLAN

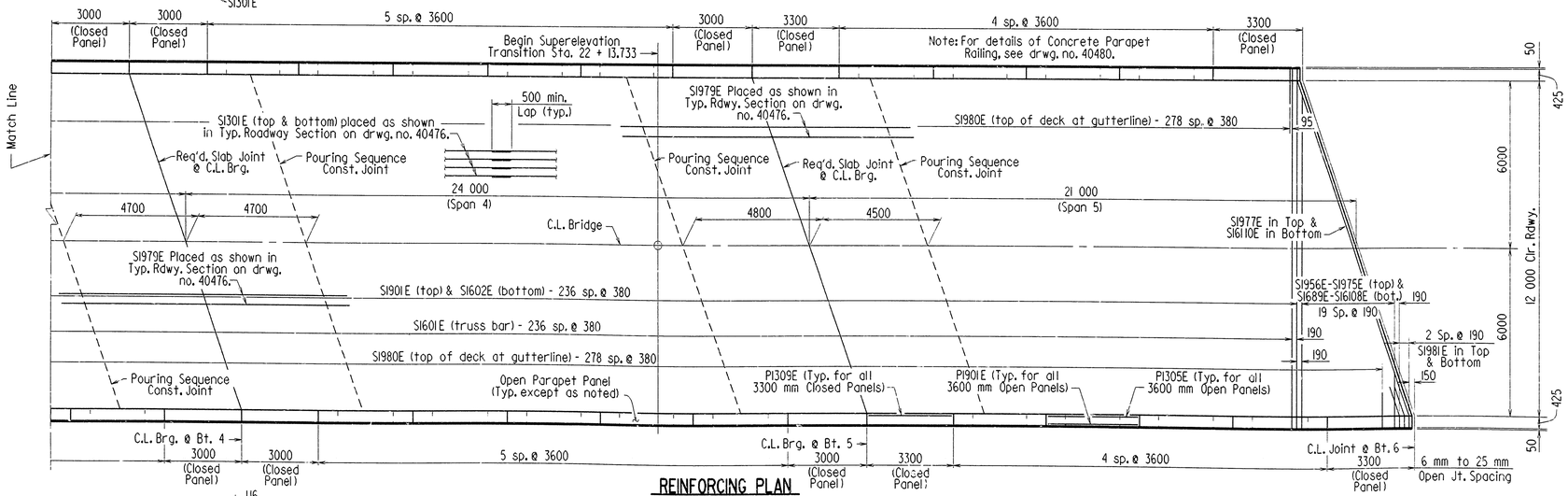

REINFORCING PLAN

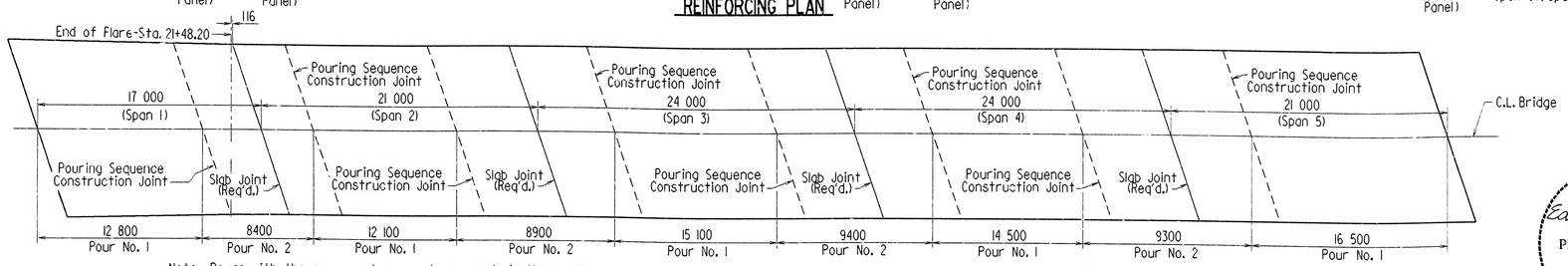

Note: Pours with the same number may be poured simultaneously or separately. All Pours (1) must be placed before Pours (2) can be placed. 48 hours shall elapse between the end of a pour and the start of the next pour. 72 hours shall elapse between the end of a pour and the start of an adjacent pour. Any railing pours made before the entire slab unit has been placed must be approved by the Engineer. Concrete in bridge superstructure shall be consolidated for the entire pour before any concrete has taken its initial set. This may require the use of a retarding agent. The Contractor must obtain approval from the Bridge Engineer for any deviations from the pouring sequence.

POURING SEQUENCE

Note: For Concrete Placement Procedure, see drwg. no. 40480.
Note: For Slab Joint Details, see drwg. no. 40480.
Note: For Bar List and Bending Diagrams, see drwg. no. 40480.
Note: For General Notes, see drwg. no. 40480.

All dimensions are in millimeters (mm) unless otherwise noted.

STATE OF ARKANSAS
Edward T. Fain
REGISTERED PROFESSIONAL ENGINEER
No. 3915
11-23-99
EDWARD T. FAIN

BRIDGE ENGINEER

SHEET 4 OF 5
DETAILS OF
107 m CONTINUOUS COMPOSITE W-BEAM UNIT
RICHLAND CREEK
WASHINGTON COUNTY
ROUTE 45 SEC. 5

ARKANSAS STATE HIGHWAY COMMISSION

LITTLE ROCK, ARK.

DRAWN BY: MJT DATE: 9/24/99 FILENAME: B040230X2.S4
CHECKED BY: AMS DATE: 11/8/99 SCALE: Not to Scale
DESIGNED BY: AMS DATE: 9/99

BRIDGE NO. 06790 DRAWING NO. 40479

AHTD METRIC

MICROFILMED
APR 11 2000

DATE REVISED	DATE FILMED	DATE REVISED	DATE FILMED

FED. ROAD DIST. NO.	STATE	FED. AID PROJ. NO.	SHEET NO.	TOTAL SHEETS
6	ARK.			
JOB NO.		040230	66	143
(1) 06790		SPAN DTLS.	40480	

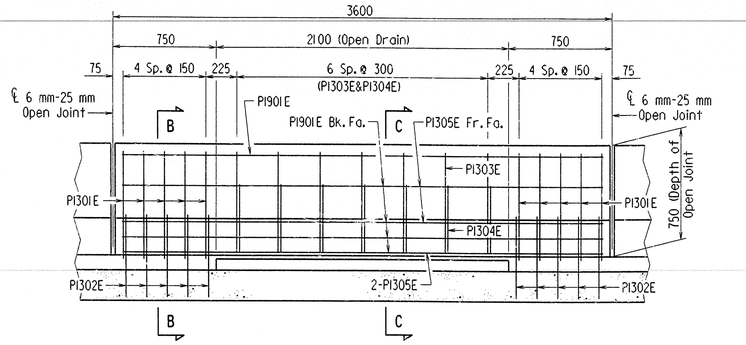

DETAIL OF OPEN PARAPET PANEL

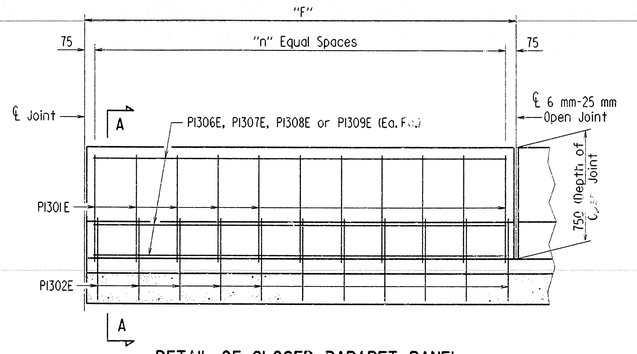

DETAIL OF CLOSED PARAPET PANEL

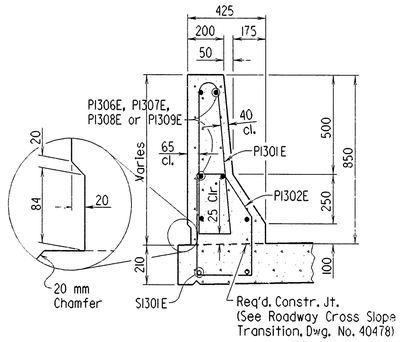

SECTION A-A

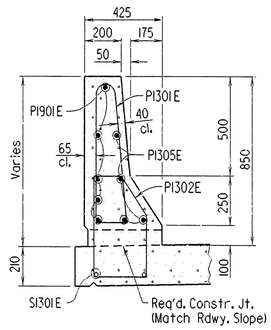

SECTION B-B

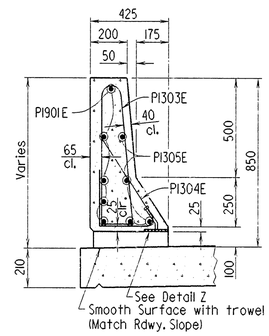

SECTION C-C

VARIABLE TABLE FOR CLOSED PARAPET PANEL

"F"	Longitudinal Reinforcing	"n"
3157	P1306E	10
3060	P1307E	10
3000	P1308E	10
3300	P1309E	11

BAR LIST (UNIT TOTAL)

MARK	NO. REQ'D.	LENGTH	P.D.
S1301E	970	11 220	Str.
S1601E	237	13 210	76
S1602E	237	12 850	Str.
S1603E-S1634E	1 EA.	13 640-13 210	76
S1635E-S1667E	1 EA.	13 290-12 850	Str.
S1668E-S1688E	1 EA.	3120-13 290	Str.
S1689E-S16108E	1 EA.	12 170-2260	Str.
S16109E	1	14 180	95
S16110E	1	13 620	95
S1901E	237	12 850	Str.
S1902E-S1934E	1 EA.	13 290-12 850	Str.
S1935E-S1955E	1 EA.	3120-13 290	Str.
S1956E-S1975E	1 EA.	12 170-2260	Str.
S1976E	1	14 180	114
S1977E	1	13 620	114
S1978E	46	10 000	Str.
S1979E	138	11 200	Str.
S1980E	558	1450	Str.
S1981E	14	1510	114
P1301E	648	1950	50
P1302E	648	1700	50
P1303E	294	1800	50
P1304E	294	950	50
P1305E	168	3500	Str.
P1306E	12	3050	Str.
P1307E	12	2960	Str.
P1308E	48	2900	Str.
P1309E	48	3200	Str.
P1901E	210	3500	Str.

Bending Diagrams

(Dimensions are out to out of bars.)

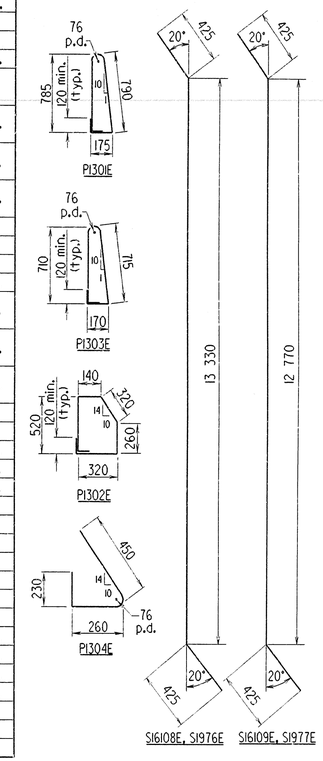

* 12 mm Overtolerance, No Undertolerance.

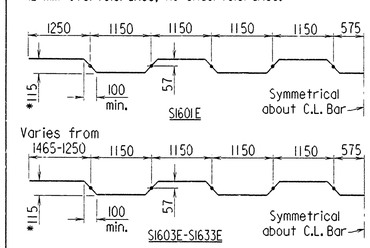

Note: All bars designated with an "E" suffix are to be epoxy coated.

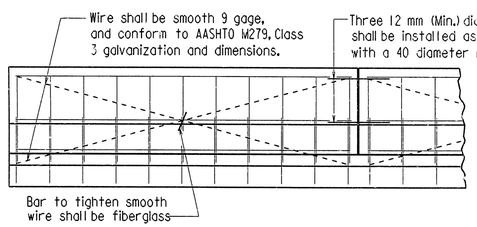

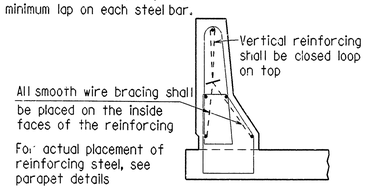

All panels shall be braced as shown to prevent racking. All open joints shall be sawed as soon as practical to a minimum width of 6 mm. To control cracking before sawing all joints must be grooved before the concrete is set. Sawing of the joints must be controlled so it will follow the grooved joint.

The extruded parapet shall conform to the horizontal and vertical lines shown on the plans or as directed by the Engineer and shall present a smooth, uniform appearance and texture. Exposed surfaces may be given a light brush finish or a Class 3, Textured Coating Finish, in place of Class 2, Rubbed Finish.

DETAILS OF OPTIONAL SLIPFORMING OF CONCRETE PARAPET RAIL

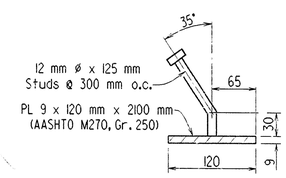

DETAIL Z

Note:
The surfaces of the 9 mm Plates which will not be in contact with concrete shall be painted in accordance with Section 630, or as approved by the Engineer. Only one coat is required and shall be applied in the fabricator's shop. Painting will not be paid for directly, but will be considered subsidiary to the item "Structural Steel in Beam Spans (M270, Gr. 345W)."

Note: Studs and Plates shall be measured and paid for as "Structural Steel in Beam Spans (M270, Gr. 345W)."

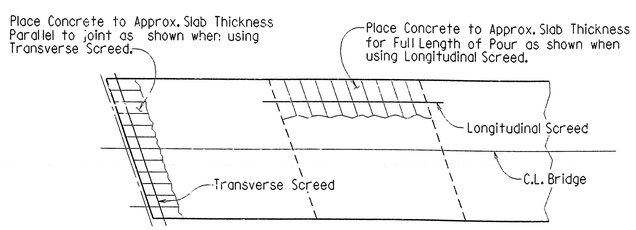

CONCRETE PLACEMENT PROCEDURE

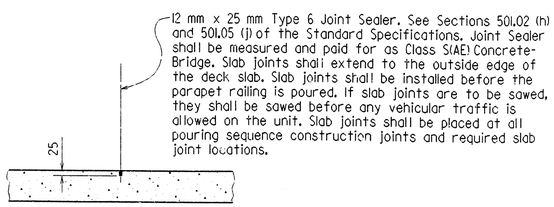

SLAB JOINT DETAIL

MICROFILMED

APR 11 2000

STATE OF ARKANSAS
Edward T. Fain
REGISTERED PROFESSIONAL ENGINEER
No. 3915
11-23-99
EDWARD T. FAIN

BRIDGE ENGINEER

All dimensions are in millimeters (mm) unless otherwise noted.

SHEET 5 OF 5
DETAILS OF
107 m CONTINUOUS COMPOSITE W-BEAM UNIT
RICHLAND CREEK
WASHINGTON COUNTY
ROUTE 45 SEC. 5

ARKANSAS STATE HIGHWAY COMMISSION
LITTLE ROCK, ARK.

DRAWN BY: MJT DATE: 9/14/99 FILENAME: B040230X2.S5
CHECKED BY: AMS DATE: 11/8/99 SCALE: Not to Scale
DESIGNED BY: AMS DATE: 9/99

BRIDGE NO. 06790 DRAWING NO. 40480

METRIC