DATE REVISED	DATE FILMED	DATE REVISED	DATE FILMED	FED. ROAD DIST. NO.	STATE	FED. AID PROJ. NO.	SHEET NO.	TOTAL SHEETS
△1 3/21/01	8-13-01			6	ARK.		17	
				JOB NO.		040230		
				① 06789, 06790 & 02712 QUANTITIES			40445	

SCHEDULE OF BRIDGE QUANTITIES - JOB NO. 040230

BRIDGE NUMBER	CODE NUMBER	NAME PLATE TITLE	UNIT OF STRUCTURE	ITEM NO.	205	603	801	SS & 802	SS & 802	803	SP & 804	SP & 804	805	SP & 807	SP & 808	809	812	816	816	816	821	SP JOB 040230	SP JOB 040230	SP JOB 040230	SP & 802 JOB 040230
				ITEM	REMOVAL OF EXISTING BRIDGE STRUCTURE (SITE NO.)	TEMPORARY BRIDGE STRUCTURE (7.2 METER ROADWAY WIDTH)	UNCLASSIFIED EXCAVATION FOR STRUCTURES-BRIDGE	CLASS S CONCRETE-BRIDGE	CLASS S (AE) CONCRETE-BRIDGE	CLASS I PROTECTIVE SURFACE TREATMENT	REINFORCING STEEL - BRIDGE (GRADE 420)	EPOXY COATED REINFORCING STEEL (GRADE 420)	② STEEL PILING (HP 310 X 79))	STRUCTURAL STEEL IN BEAM SPANS (M270, GRADE 345W)	ELASTOMERIC BEARINGS	PREFORMED JOINT SEAL	BRIDGE NAME PLATE (TYPE C)	DUMPED RIPRAP	FILTER BLANKET	FOUNDATION PROTECTION RIPRAP	MODIFICATION OF EXISTING BRIDGE STRUCTURE (BRIDGE NO. 02712)	REPAIR OF EXISTING BENTS	CRACK REPAIR	ARMORED JOINT WITH NEOPRENE STRIP SEAL	SRA MODIFIED CLASS S(AE) CONCRETE
				UNIT	LUMP SUM	METER	CUBIC METER	CUBIC METER	CUBIC METER	LITER	KILOGRAM	KILOGRAM	METER	KILOGRAM	CUBIC CENTIMETER	METER	EACH	CUBIC METER	SQUARE METER	METRIC TON	LUMP SUM	CUBIC METER	METER	METER	CUBIC METER
06789	X071	WHITE RIVER	END BENT NO. 1					19.36		1	1087		65.0	350			1	188	390						
			INT. BT. NO. 2 & 5				116	91.52			6271		100.8												
			INT. BT. NO. 3 & 4				121	91.18			6271		99.2												
			INT. BT. NO. 6				72	49.56			3468		40.0												
			INT. BT. NOS. 7 & 8				187	146.70			11 248														
			END BENT NO. 9				47	19.98		1	1395		20.4	350											
			85 m CONT. W-BEAM UNIT						263.37	109		34 834		90 840	141 180									13.0	
			79 m CONT. W-BEAM UNIT						244.63	102		32 326		141 670	132 520									25.9	
			TOTAL FOR BRIDGE NO. 06789				543	418.3	508.0	213	29 740	67 160	325.4	233 210	273 700		1	188	390					38.9	
06790	X071	RICHLAND CREEK	END BENT NO. 1					23.46		1	1528		52.2	387			1	129	260						
			INT. BT. NO. 2				93	43.10			3489														
			INT. BT. NOS. 3 & 4				43	91.24			7378														
			INT. BT. NO. 5				110	44.58			3612														
			END BENT NO. 6					22.72		1	1483		54.0	370				168	353						
			107 m CONT. W-BEAM UNIT						48.40	138		42 900		150 328	189 700									28.0	283.80
			TOTAL FOR BRIDGE NO. 06790				246	225.1	48.4	140	17 490	42 900	106.2	151 085	189 700		1	297	613					28.0	283.80
02712	X071	BRUSH CREEK	END BENT NOS. 1 & 5				40	34.80		2	2501		21.6	719			1	58	883	△1 ~~474~~ 506					
			INT. BT. NOS. 2, 3 & 4				△1 ~~92~~ 148	△1 ~~44.10~~ 74.50			△1 ~~4449~~ 7169											△1 ~~0~~ 0	△1 ~~6~~ 0		
			60.96 m CONT. W-BEAM UNIT						188.50	78		25 580		65 731	116 500	25.9									
			TOTAL FOR BRIDGE NO. 02712			47.2	~~132~~ 188	~~78.9~~ 109.3	188.5	80	~~6950~~ 9670	25 580	21.6	66 450	116 500	25.9	1	58	883	~~474~~ 506		~~0.1~~ 0	~~6~~ 0		
			SITE NO. 1 (STA. 17+02)	1																					
			SITE NO. 2 (STA. 21+87)	1																					
			△1 SITE NO. 3 (STA. 44+55)	1																					
			TOTALS FOR JOB NO. 040230			47.2	① ~~921~~ 977	~~722.3~~ 752.7	744.9	433	~~54 180~~ 56,900	135 640	453.2	450 745	579 900	25.9	3	543	1886	~~474~~ 506	△1 ~~1~~ 0	~~0.1~~ 0	~~6~~ 0	66.9	283.80

① INCLUDES APPROX. 166 CUBIC METERS OF ROCK EXCAVATION.

② THESE STEEL PILES ARE REQUIRED TO HAVE SPECIAL POINTS WHICH WILL NOT BE PAID FOR DIRECTLY BUT WILL BE CONSIDERED SUBSIDIARY TO THE ITEM "STEEL PILING (HP 310 X 79)".

JAMES TRIBO
DESIGN SECTION SUPERVISOR

STATE OF ARKANSAS
Edward T. Fain
REGISTERED PROFESSIONAL ENGINEER
No. 3915
8-3-01
EDWARD T. FAIN

BRIDGE ENGINEER

△1 Revised Int. Bts. 2, 3 & 4 MJT 3/21/01 Checked By: J.C.T.

SCHEDULE OF BRIDGE QUANTITIES
WHITE RIVER, RICHLAND & BRUSH CRKS.
STRS. & APPRS. (S)
WASHINGTON COUNTY
ROUTE 45 SEC. 5
ARKANSAS STATE HIGHWAY COMMISSION
LITTLE ROCK, ARK.

DRAWN BY: MAH DATE: 11/19/99 FILENAME: B040230.01
CHECKED BY: AHS DATE: 2/16/00 SCALE: N.T.S.
DESIGNED BY: DATE:

BRIDGE NO. 06789, 06790 & 02712 DRAWING NO. 40445

A H METRIC D

DATE REVISED	DATE FILMED	DATE REVISED	DATE FILMED	FED. ROAD DIST. NO.	STATE	FED. AID PROJ. NO.	SHEET NO.	TOTAL SHEETS
3/21/01	8-13-01			6	ARK.			
				JOB NO.		040230	68	143
				02712		LAYOUT	40482	

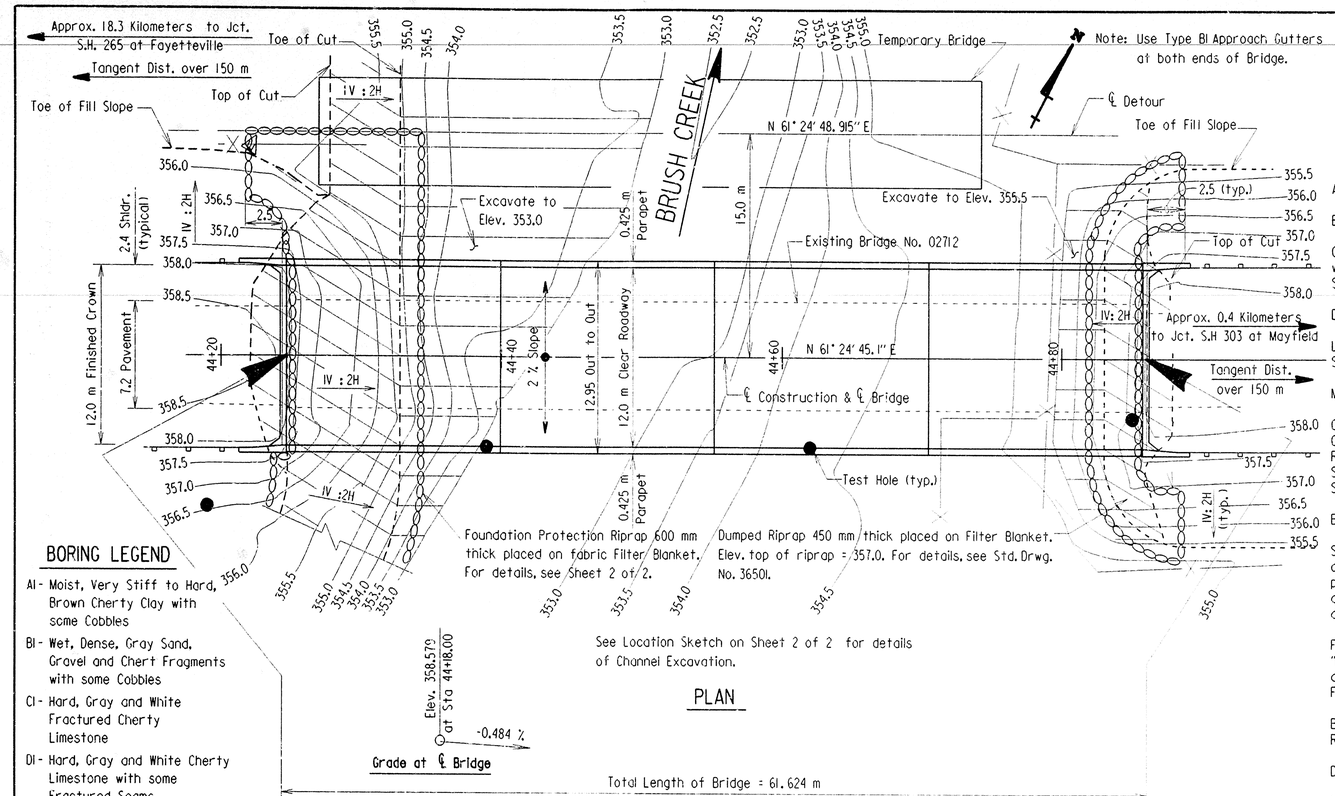

PLAN

BORING LEGEND

- A1 - Moist, Very Stiff to Hard, Brown Cherty Clay with some Cobbles
- B1 - Wet, Dense, Gray Sand, Gravel and Chert Fragments with some Cobbles
- C1 - Hard, Gray and White Fractured Cherty Limestone
- D1 - Hard, Gray and White Cherty Limestone with some Fractured Seams
- E1 - Wet, Dense, Brown Sand and Gravel
- F1 - Hard, Gray Cherty Limestone with some Fractured Seams
- G1 - Hard, Gray Cherty Limestone
- H1 - Moist, Stiff, Brown Cherty Clay
- J1 - Moist, Stiff, Reddish Brown and Gray Cherty Clay (Fill Material)
- K1 - Moist, Medium Stiff, Brown and Gray Sandy Clay with some Gravel
- L1 - Wet, Medium Dense, Brown Sand and Gravel

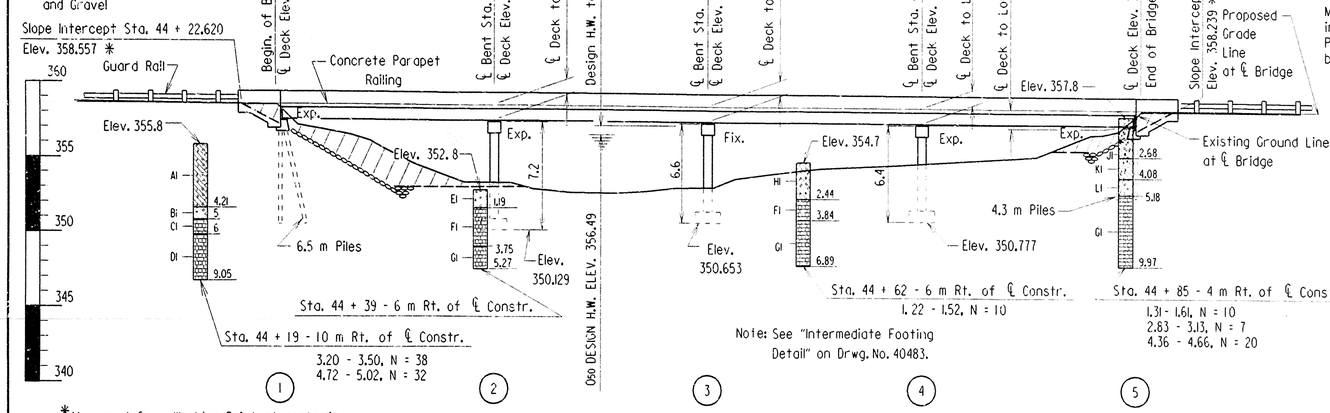

*Measured from Working Point at centerline bridge. See "Rounding Detail" on Drwg. No. 40487

ELEVATION

△ Revised Int. Bts. 2, 3 & 4 3/21/01 Checked by: JGT.

FOR R/W DATA AND GUARD RAILS - SEE ROADWAY PLANS

GENERAL NOTES

All dimensions are in meters unless otherwise noted.

BENCH MARK: Chiseled square in southeast corner bridge, 4.96 m Rt. of ℄ of Constr., Sta. 44+85.823, Elevation 358.367.

CONSTRUCTION SPECIFICATIONS: Arkansas State Highway and Transportion Department Standard Specificaitions for Highway Construction (1996 Edition), with applicable supplemental specifications and special provisions. Unless otherwise noted in the plans, Section and Subsection refer to the Standard Construction Specificaitons.

DESIGN SPECIFICATIONS: AASHTO Standard Specifications for Highway Bridges (1996), with current interim specifications.

LIVE LOADING: MS 18 METHOD OF DESIGN: Load Factor
SEISMIC PERFORMANCE CATEGORY: A

MATERIALS AND STRENGTHS:

Class S(AE) Concrete (superstructure)	f'c = 28.0 MPa
Class S Concrete (substructure)	f'c = 24.0 MPa
Reinforcing Steel (ASTM A615/A615M-96a)	fy = 420 MPa
Structural Steel (AASHTO M 270, Grade 345W)	Fy = 345 MPa
Structural Steel (AASHTO M 270, Grade 250)	Fy = 250 MPa

BORING LOGS: Boring logs may be obtained from the Programs and Contracts Division.

STEEL PILING: All piling shall be HP x 310 x 79 and shall be driven with an approved air, steam, or diesel hammer to a minimum safe bearing capacity of 490 kN per pile and into the material designated as limestone on the boring legend. Piling in end bents shall be driven to a minimum penetration of 3.0 m meters below natural ground after embankment to bottom of cap is in place. Lengths shown are for estimating quantities and for determining payment for cut-off and build-up in accordance with the Standard Specifications. On all piles the Contractor shall use approved steel H-Pile driving points.

FOOTINGS: The top of the interior footings shall be set a minimum of .6 m into material designated as hard cherty limestone. See "Intermediate Footing Detail" on sheet 2. Rock excavations shall be made to neat lines of the concrete footings. Care shall be excercised to avoid shattering of of the rock by excessive blasting. Concrete in the footings shall be poured directly against excavated surfaces of rock. Foundations for footings shall be prepared in accordance with Section 801.04.

BRIDGE DECK: The concrete bridge deck shall be given a tine finish as specified for final finishing in subsection 802.19 for Class 5 Tined Bridge Roadway Surface Finish.

DETAIL DRAWINGS:	DRAWING NO.
End Bents	40484 & 40485
Intermediate Bents	40486
60.96 m Continuous W-Beam Unit	40487-40491
Steel Piling	36505
Type B1 Approach Gutter	36525

EXISTING BRIDGE: Existing Bridge No. 02712 (log mile 14.26) is 8.56 m wide and 61.57 m long. It consists of four 1- Beam spans supported on pile end bents and concrete piers.

TEMPORARY BRIDGE: Construct a 47.2 m long temporary bridge approximately 15 m downstream. The temporary bridge shall have a minimum roadway width of 7.2 m, a minimum live load capacity of M13.5 and a minimum deck elevation of 357.7. See section 603. See drawings numbers 36556 & 36557 for standard temporary bridge details. A timber deck will not be allowed. See roadway plans for actual detour grade and alignment.

PILING FOR TEMPORARY BRIDGE: If timber piling and pine timber are used on this temporary bridge structure, the materials shall be treated with a preservative according to the Standard Specifications. All piling in the temporary bridge shall be in accordance with the requirements of Subsections 805.03 through 805.06 of the Standard Specifications using Method A, Empirical Pile Formula. Painting of steel piles will be not be required.

MODIFICATION OF EXISTING BRIDGE STRUCTURE: Remove the existing superstructure and modify the bents as shown in the details. For requirements in conducting the work, see Section 821. Plans of the existing structure will be made available to the contractor upon request to the Programs And Contracts Division. Existing Drwg. Nos. include 7738, 7739, 5193, & 5195. All material removed from the existing structure shall become the property of the contractor.

MICROFILMED
APR 11 2000

STATE OF ARKANSAS
Edward T. Fair
REGISTERED PROFESSIONAL ENGINEER
No. 3915
2-15-00
EDWARD T. FAIR
BRIDGE ENGINEER

(SHEET 1 OF 2)

LAYOUT OF BRIDGE OVER BRUSH CREEK

WHITE RIVER, RICHLAND & BRUSH CRKS. STRS. & APPRS. (S)

WASHINGTON COUNTY

ROUTE 45 SEC. 5

ARKANSAS STATE HIGHWAY COMMISSION

LITTLE ROCK, ARK.

DRAWN BY: TEB DATE: 08/09/99 FILENAME: B040230X2.L11
CHECKED BY: PMH DATE: 2-14-00 SCALE: 1:200
DESIGNED BY: CES DATE: 7-99
BRIDGE NO. 02712 DRAWING NO. 40482

METRIC D

DATE REVISED	DATE FILMED	DATE REVISED	DATE FILMED

FED. ROAD DIST. NO.	STATE	FED. AID PROJ. NO.	SHEET NO.	TOTAL SHEETS
6	ARK.			
JOB NO.		040230	69	143
02712		LAYOUT	40483	

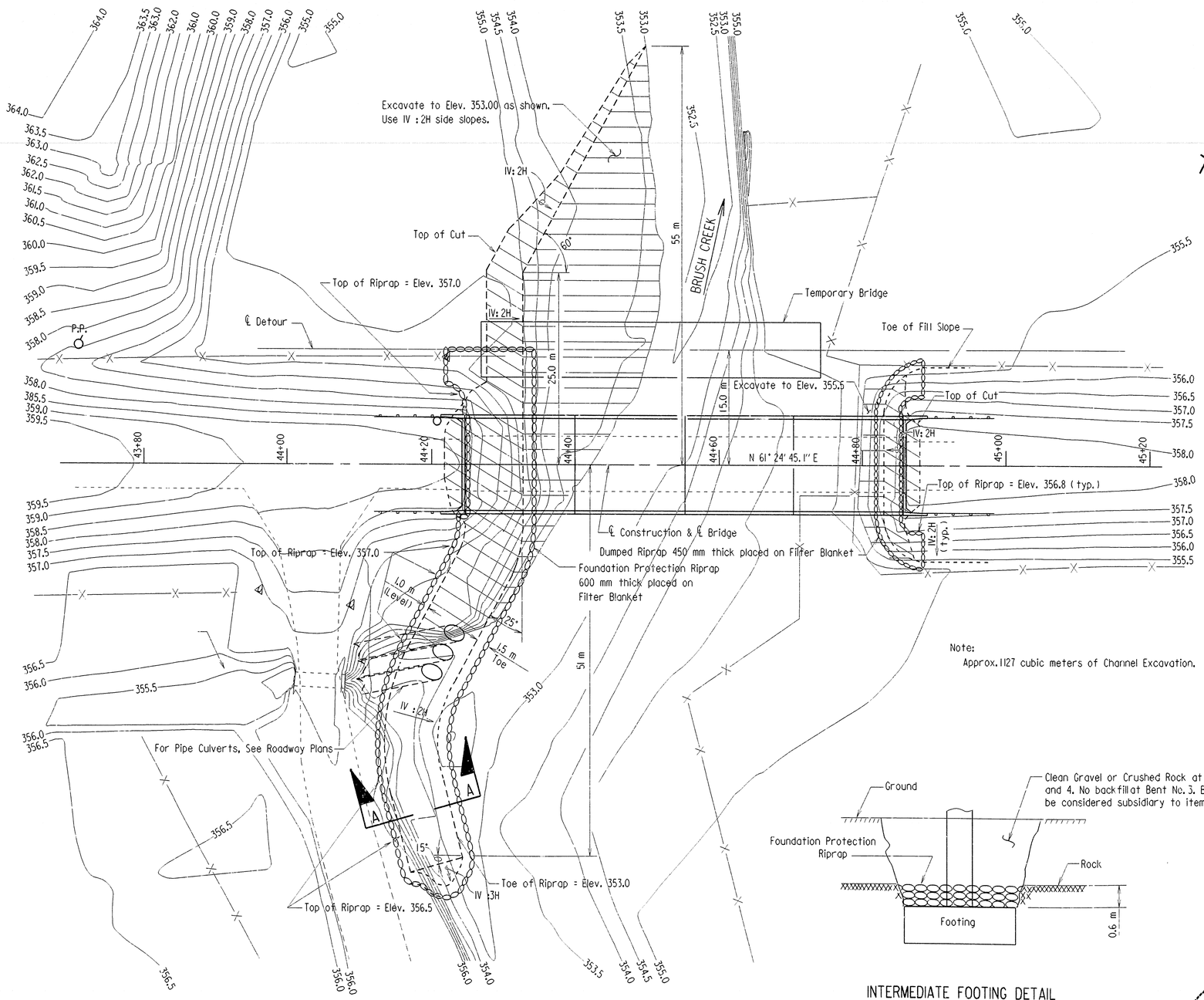

LOCATION SKETCH

1:300

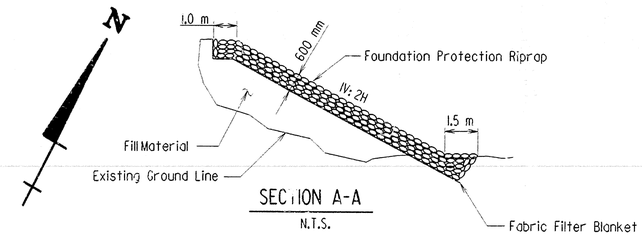

SECTION A-A

N.T.S.

HYDRAULIC DATA

FLOOD DESCRIPTION	FREQUENCY	DISCHARGE	▲ NATURAL WATER SURFACE ELEVATION	WATER SURFACE ELEVATION WITH BACKWATER
	YEARS	CMS	METERS	METERS
DESIGN	50	340	356.49	356.54
BASE	100	410	356.72	356.80
EXTREME	500	640	357.36	357.74
OVERTOPPING	> 500	——	——	——

▲ UNCONSTRICTED WATER SURFACE WITHOUT STRUCTURES OR ROADWAY APPROACHES

DRAINAGE AREA = 51.5 SQUARE KILOMETERS

HISTORICAL H.W. ELEVATION = 357.93 METERS

Note:
Approx. 1127 cubic meters of Channel Excavation.

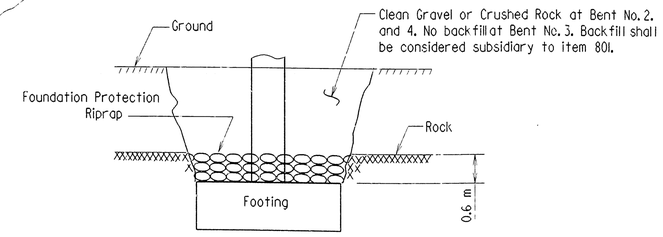

INTERMEDIATE FOOTING DETAIL

N.T.S.

STATE OF ARKANSAS
Edward T. Fain
REGISTERED PROFESSIONAL ENGINEER
No. 3913
11-23-99
EDWARD T. FAIN

BRIDGE ENGINEER

(SHEET 2 OF 2)

LAYOUT OF BRIDGE OVER BRUSH CREEK

WHITE RIVER, RICHLAND & BRUSH CRKS. STRS. & APPRS. (S)

WASHINGTON COUNTY

ROUTE 45 SEC. 5

ARKANSAS STATE HIGHWAY COMMISSION

LITTLE ROCK, ARK.

DRAWN BY: TEB DATE: 08/09/99 FILENAME: B040230X2.LII
CHECKED BY: [illegible] DATE: 11-12-99 SCALE: As Noted
DESIGNED BY: CES DATE: 7-99

BRIDGE NO. 02712 DRAWING NO. 40483

METRIC

MICROFILMED
APR 11 2000

DATE REVISED	DATE FILMED	DATE REVISED	DATE FILMED	FED. ROAD DIST. NO.	STATE	FED. AID PROJ. NO.	SHEET NO.	TOTAL SHEETS
				6	ARK.			
				JOB NO.		040230	70	143
				1	02712	End Bents		40484

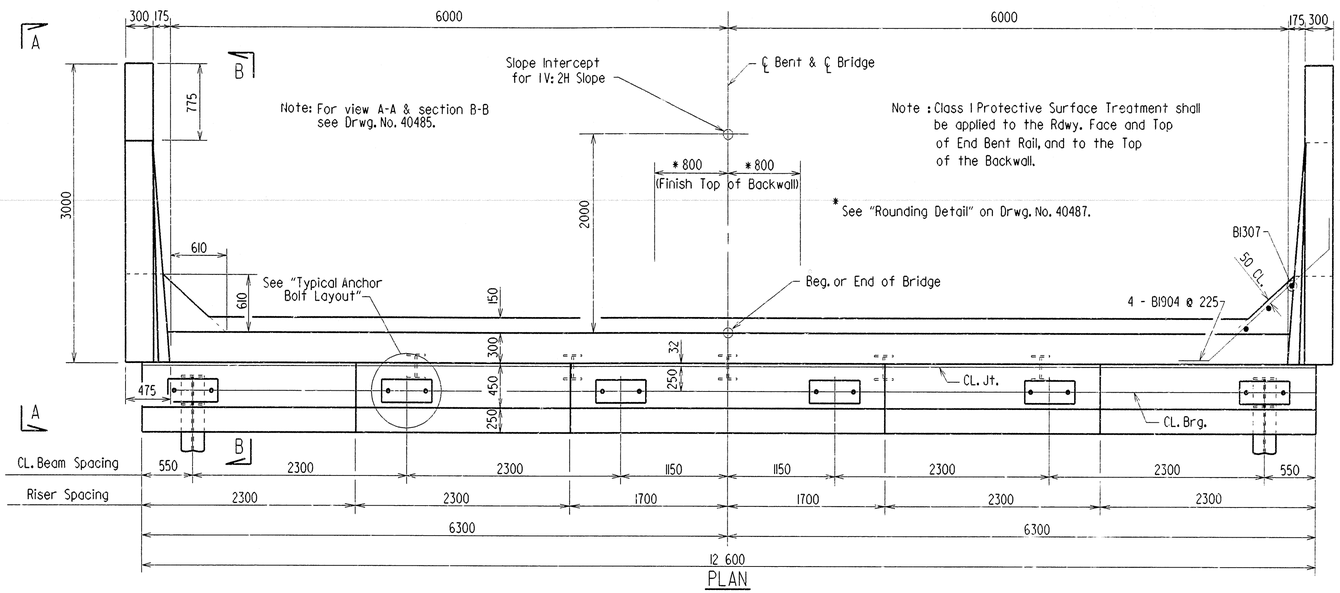

PLAN

Note: For Details of Elastomeric Bearings, See Drwg. No. 40481.

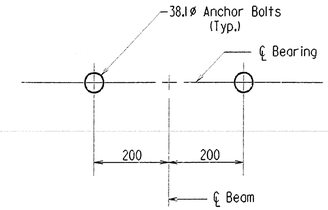

TYPICAL ANCHOR BOLT LAYOUT

N.T.S.

Note: Remove existing cap, backwall, & wings. Retain existing vertical piles in place and incorporate into new bent cap. Existing battered piles shall be removed in accordance with section 205. Payment shall be considered subsidiary to "Modification of Existing Bridge Structure".

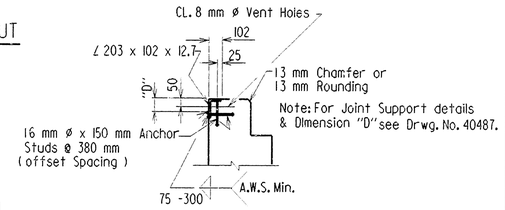

DETAIL Z

1:20

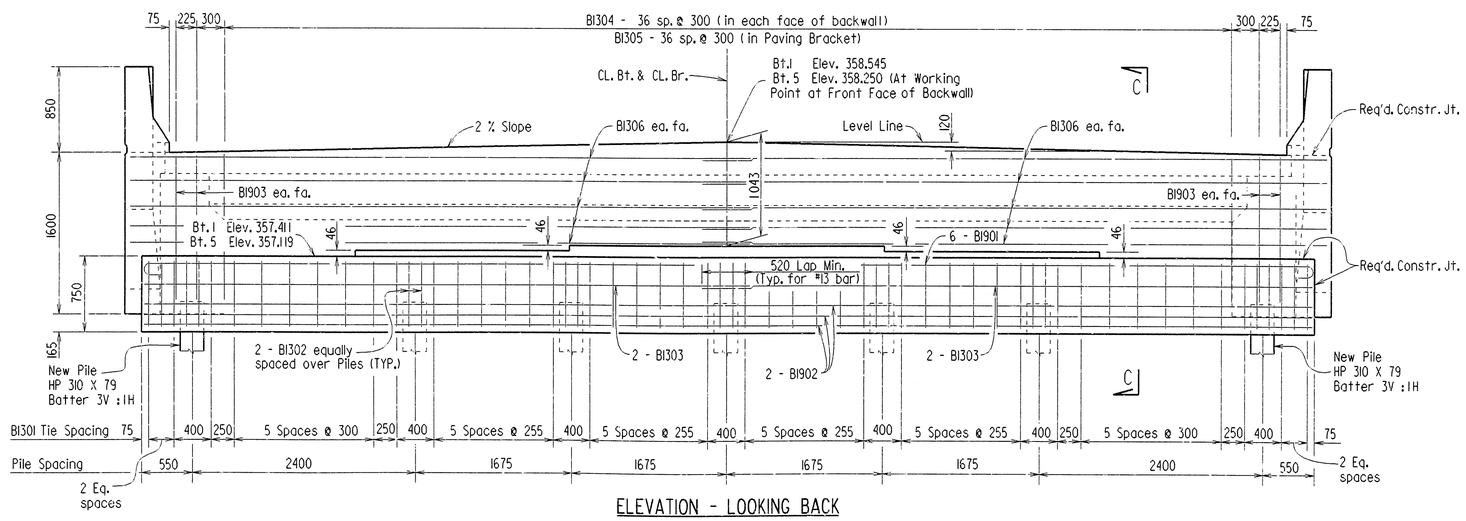

ELEVATION - LOOKING BACK

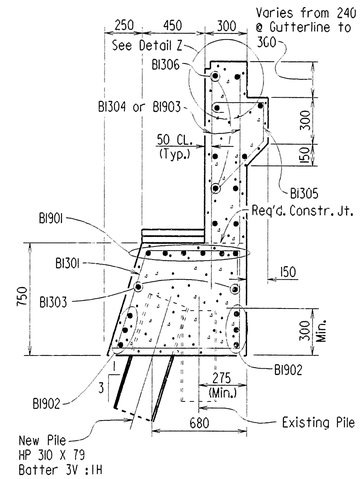

SECTION C-C

1:20

MICROFILMED

APR 11 2000

STATE OF ARKANSAS
Edward T. Fain
REGISTERED PROFESSIONAL ENGINEER
No. 3915
11-23-99
EDWARD T. FAIN

BRIDGE ENGINEER

(SHEET 1 OF 2)
DETAILS OF END BENTS
BRUSH CREEK
WASHINGTON COUNTY

ROUTE 45 SEC. 5

ARKANSAS STATE HIGHWAY COMMISSION

LITTLE ROCK, ARK.

DRAWN BY: CH DATE: 11-1-99 FILENAME: B040230X3.BI
CHECKED BY: MGH DATE: 11-17-99 SCALE: 1:30 or As Noted
DESIGNED BY: CH DATE: 8-1-99

BRIDGE NO. 02712 DRAWING NO. 40484

A H METRIC D

DATE REVISED	DATE FILMED	DATE REVISED	DATE FILMED	FED. ROAD DIST. NO.	STATE	FED. AID PROJ. NO.	SHEET NO.	TOTAL SHEETS
				6	ARK.			
				JOB NO.		040230	71	143
				1	02712	END BENTS		40485

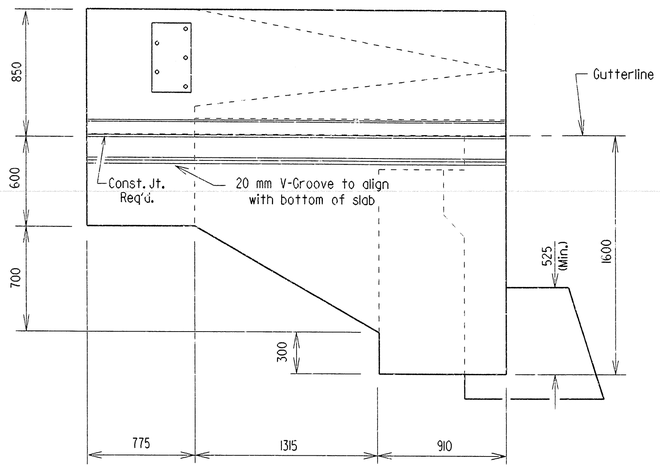

VIEW A-A

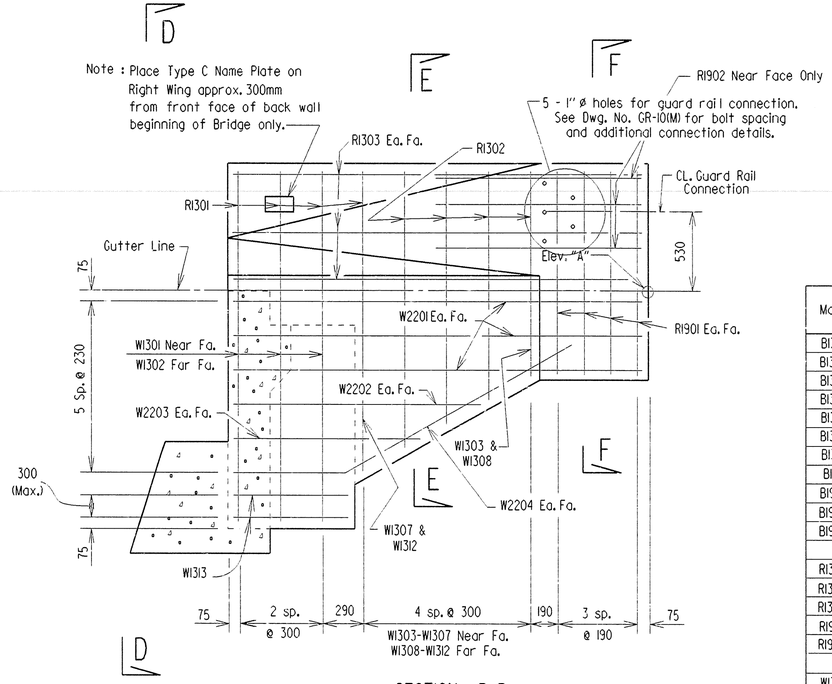

SECTION B-B

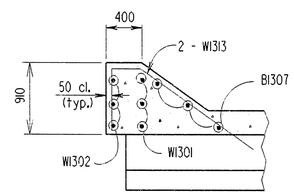

SECTION X-X

N.T.S.

ELEVATION "A"

BENT 1	358.440
BENT 5	358.111

BAR LIST PER END BENT

Mark	No. Req'd.	Length	Pin Dia.
B1301	46	3010	50
B1302	14	1950	50
B1303	4	6510	str.
B1304	74	1390	str.
B1305	37	1200	50
B1306	20	6690	str.
B1307	6	1260	str.
B1901	6	12 930	114
B1902	6	12 500	str.
B1903	8	1590	str.
B1904	8	2250	114
R1301	8	1170	50
R1302	8	1190	50
R1303	12	2900	str.
R1901	16	1350	str.
R1902	6	1410	str.
W1301	6	1950	76
W1302	6	2350	str.
W1303 to W1307	2 ea.	1010 to 1660	76
W1308 to W1312	2 ea.	1380 to 2020	str.
W1313	4	2620	50
W2201	12	2900	str.
W2202	4	1810	str.
W2203	4	1380	str.
W2204	4	2640	133

Bending Diagrams (Dimensions are out to out of bars.)

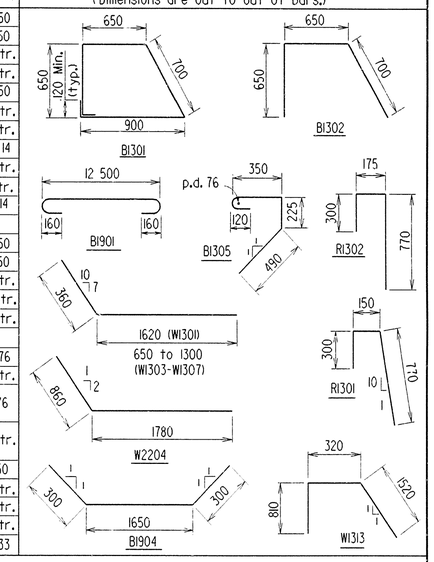

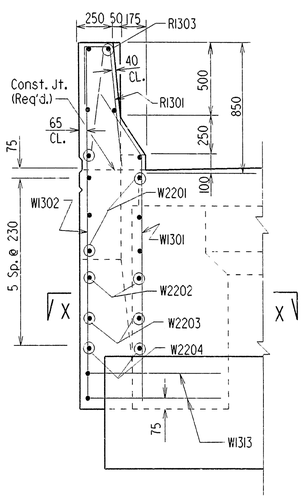

VIEW D-D

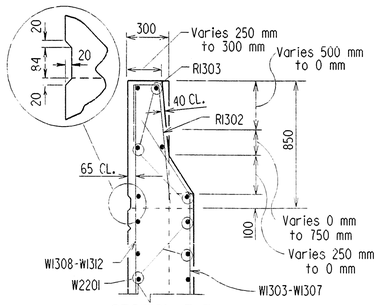

SECTION E-E

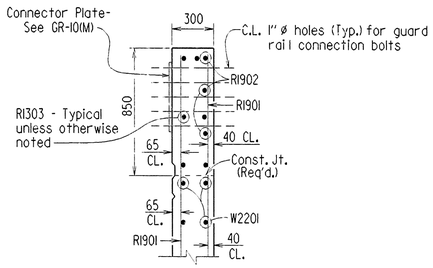

SECTION F-F

1:20

All dimensions are in millimeters (mm) unless otherwise noted.

All concrete shall be Class "S" with a minimum 28 day compressive strength f'c = 24 MPa Concrete shall be poured in the dry and all exposed corners to be chamfered 20 mm unless otherwise noted.

All reinforcing steel shall conform to ASTM A 615/A 615M-96a, Grade 420 (yield strength = 420 MPa).

Backwall shall not be poured before beams are in place and concrete span pours have been made.

Structural steel in end bents shall be AASHTO M 270, Gr. 345W and shall be paid for as "Structural Steel in Beam Spans (M 270-Gr.345W)"

If anchor bolts are drilled into cap, top reinforcing bars shall be properly placed to avoid damage. See "Anchor Bolt Detail", Drwg. No. 40481.

For additional information see layout.

MICROFILMED

APR 11 2000

STATE OF ARKANSAS
Edward T. Fain
REGISTERED PROFESSIONAL ENGINEER
No. 3915
3-21-00
EDWARD T. FAIN

BRIDGE ENGINEER

(SHEET 2 OF 2)
DETAILS OF END BENTS
BRUSH CREEK
WASHINGTON COUNTY

ROUTE 45 SEC. 5

ARKANSAS STATE HIGHWAY COMMISSION

LITTLE ROCK, ARK.

DRAWN BY: CH DATE: 11-1-99 FILENAME: B040230X3.BI
CHECKED BY: [illegible] DATE: 2-14-00 SCALE: 20:1 or As Noted
DESIGNED BY: CH DATE: 8-1-99

BRIDGE NO. 02712 DRAWING NO. 40485

AHD METRIC

DATE REVISED	DATE FILMED	DATE REVISED	DATE FILMED	FED. ROAD DIST. NO.	STATE	FED. AID PROJ. NO.	SHEET NO.	TOTAL SHEETS
3/21/01	8-13-01			6	ARK.		72	
				JOB NO.		040230		
				02712		BENT DETAILS		40486A

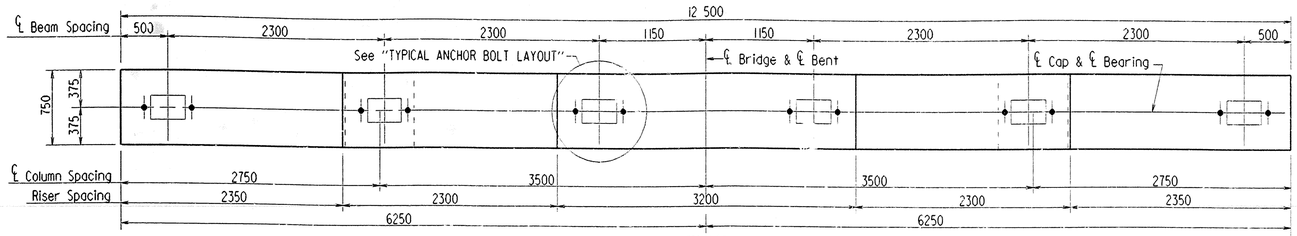

PLAN
1:30

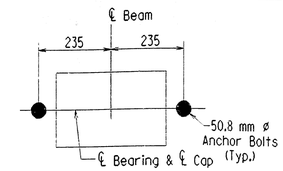

TYPICAL ANCHOR BOLT LAYOUT
1:10

Note:
For details of Elastomeric Bearings, see Dwg. No. 40481.

BAR LIST-PER BENT

MARK	NO. REQ'D.	LENGTH	'A'	'B'	P.D.
B1301	57	3610	650	1100	50
B1302	8	2800	650	1100	50
B1303	10	12 400	-	-	Str.
B2501	9	12 400			Str.
B2901	6	12 400	-	-	Str.
C1301	2 X"C"+ 6	2650	620	620	76
C2501	24	"B" + 1050	-	-	Str.
F1901	22	3180	2750	160	114
F1902	38	2080	1650	160	114
F2501	24	2400	2050	410	152

BENDING DIAGRAMS
Dimensions are out to out of bars.

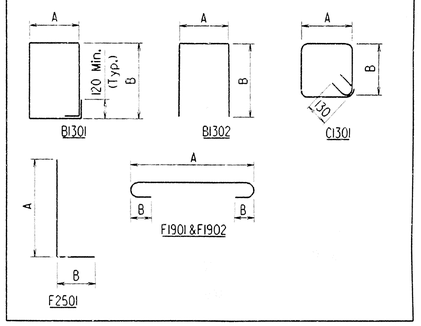

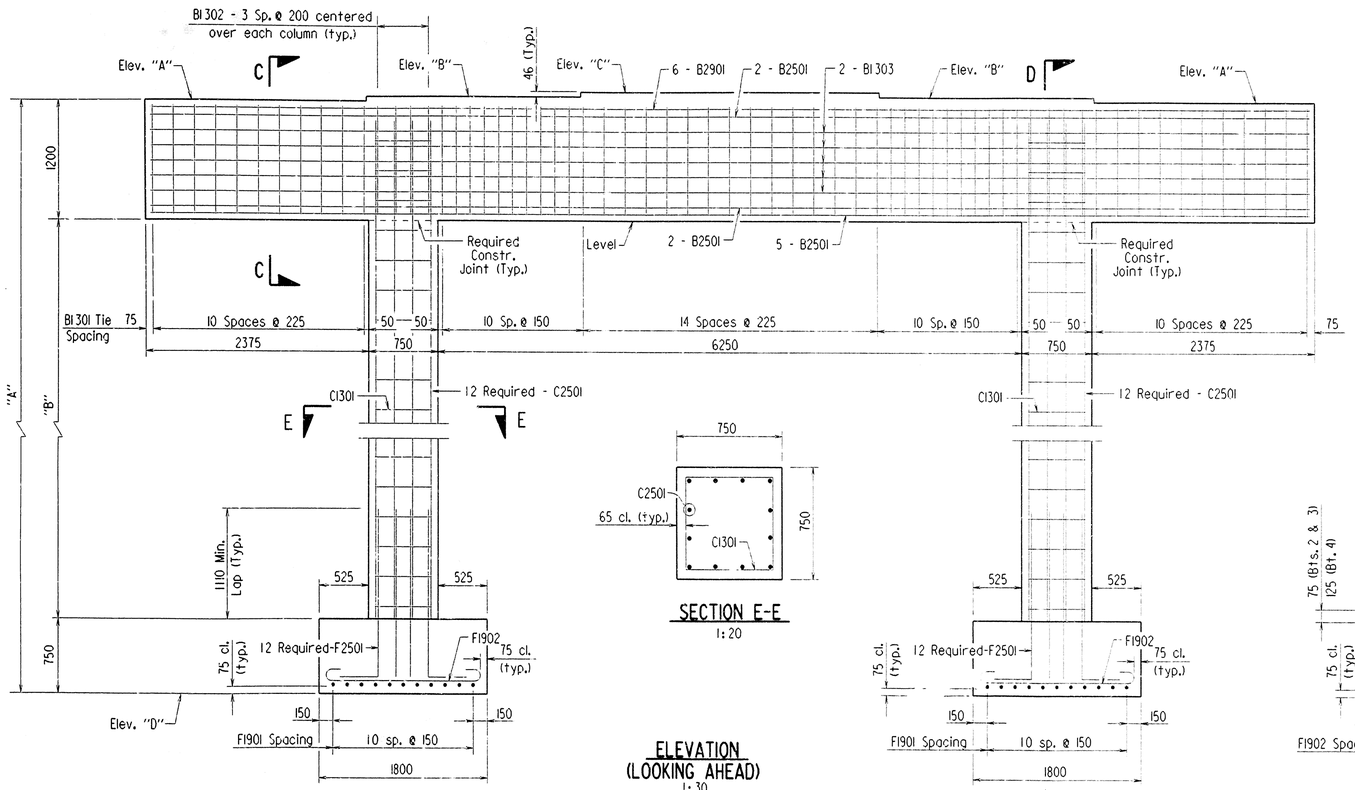

ELEVATION
(LOOKING AHEAD)
1:30

SECTION E-E
1:20

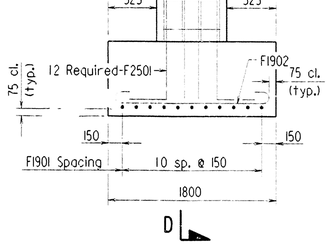

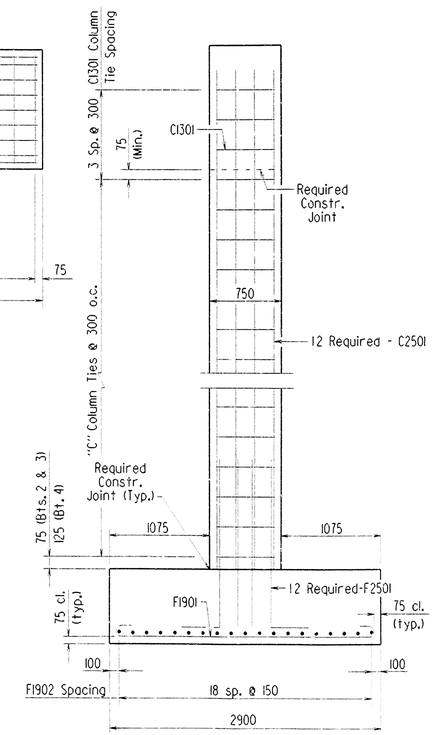

SECTION D-D
1:30

GENERAL NOTES

Stations and elevations are in meters. All other dimensions are in millimeters unless otherwise noted.

All Concrete shall be Class "S" and shall be poured in the dry. All exposed corners to be chamfered 20 mm unless otherwise noted.

All Reinforcing Steel shall conform to ASTM A615/A615M-96a, Grade 420 (fy = 420 MPa.)

If Anchor Bolts are drilled into cap, top reinforcing bars shall be properly placed to avoid damage. See "Anchor Bolt Detail", Drwg. No. 40481.

For additional information, see Layout.

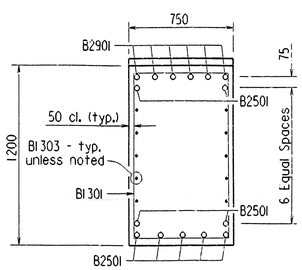

SECTION C-C
1:20

TABLE OF VARIABLES

Bent No.	Elevation "A"	Elevation "B"	Elevation "C"	Elevation "D"	"A"	"B"	"C"
2	357.369	357.415	357.461	350.169	7200	5250	18
3	357.295	357.341	357.387	350.695	6600	4650	16
4	357.221	357.267	357.313	350.821	6400	4450	15

⚠ Revised Int. Bts. 2, 3 & 4 3/21/01 MJT Checked by: JGT

STATE OF ARKANSAS
Edward T. Fain
REGISTERED PROFESSIONAL ENGINEER
No. 3915
8-3-01
EDWARD T. FAIN

BRIDGE ENGINEER

DETAILS OF INTERMEDIATE BENT NOS. 2, 3 & 4
BRUSH CREEK
WASHINGTON COUNTY

ROUTE 45 SEC. 5

ARKANSAS STATE HIGHWAY COMMISSION

LITTLE ROCK, ARK.

DRAWN BY: MJT DATE: 2/13/01 FILENAME: B040230XI.REV
CHECKED BY: JGT DATE: 3-19-01 SCALE: As Noted
DESIGNED BY: JGT DATE: 3-12-01

BRIDGE NO. 02712 DRAWING NO. 40486

METRIC

DATE REVISED	DATE FILMED	DATE REVISED	DATE FILMED	FED. ROAD DIST. NO.	STATE	FED. AID PROJ. NO.	SHEET NO.	TOTAL SHEETS
				6	ARK.			
				JOB NO.		040230	73	143
				①	02712	SPAN DTLS.	40487	

Note: All bars designated with an "E" suffix are to be epoxy coated.

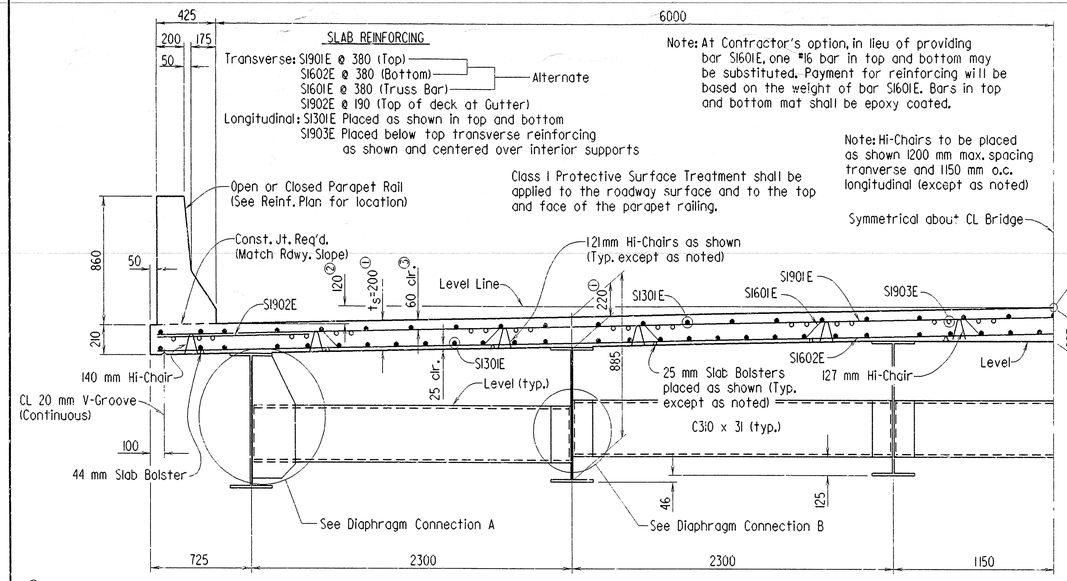

① See "ADJUSTMENT FOR SLAB THICKNESS TOLERANCE WHEN REMOVEABLE DECK FORMING IS USED".

② Working Point to Gutterline

③ Tolerance : Minus = 6 mm
Plus = The amount of slab thickening used to meet slab thickness tolerances. See "ADJUSTMENT FOR SLAB THICKNESS TOLERANCE WHEN REMOVEABLE DECK FORMING IS USED".

TYPICAL ROADWAY SECTION

Scale: 1 : 20

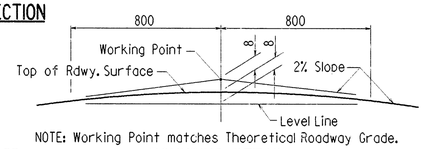

NOTE: Working Point matches Theoretical Roadway Grade.

ROUNDING DETAIL

No Scale

EXPANSION DEVICE

Rdwy. Channel C 380 x 50
Conn. Angles ∠ 178 x 102 x 12.7 x 200 mm
Preformed Joint Sealer
16 mm ø x 200 mm Studs @ 300

Note: Detail device 4 mm high and provide 8 mm shims using one 4 mm PL and two 2 mm PL's.

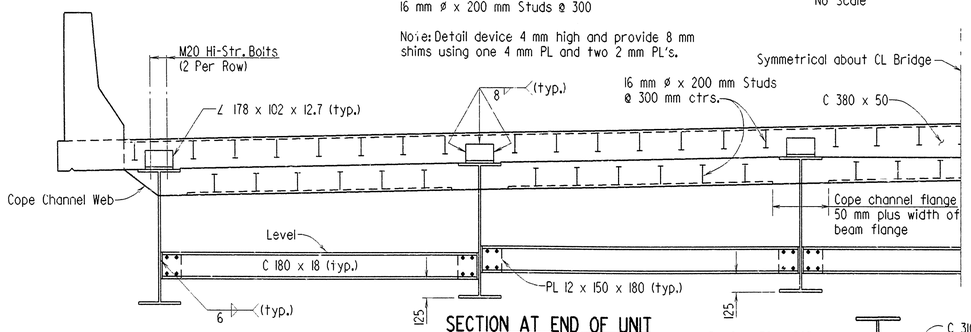

SECTION AT END OF UNIT

Scale: 1 : 20

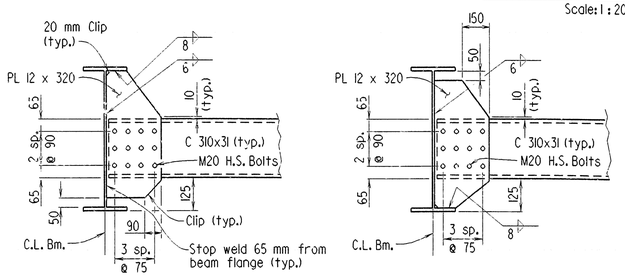

DIAPHRAGM CONNECTION A

No Scale

Note: Bolts in Diaphragm Connections shall be properly installed and tightened in accordance with subsection 807.71.

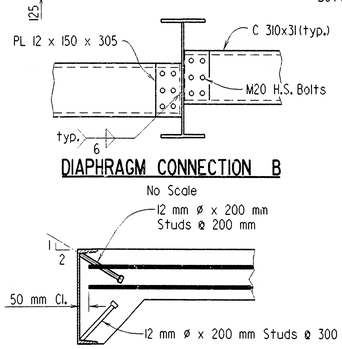

DIAPHRAGM CONNECTION B

No Scale

Note: As an alternate to 16 mm ø studs, 12 mm ø x 200 mm studs spaced as shown may be used. Use weight of 16 mm ø stud as basis of measurement of structural steel in anchors.

DETAILS OF ALTERNATE ANCHORS

No Scale

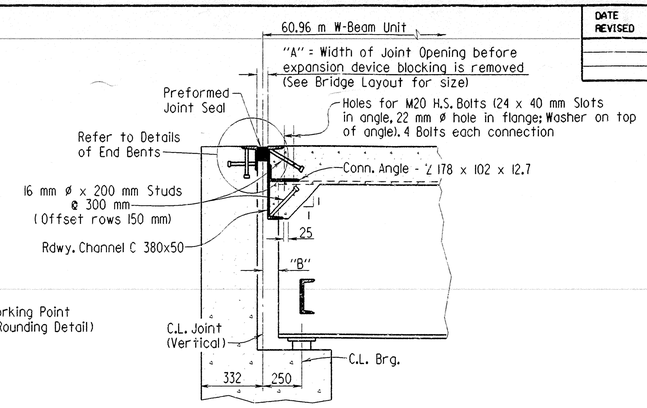

SECTION THRU JOINT AT END OF UNIT

No Scale

JOINT SEAL DATA

"A" Width Perpendicular to Joint at 24 Hour Average Temperature*** of:			"B" Perpendicular To Joint At 16° C	"C" Uncompressed Seal Width	"T" Bumper Plate Size
4° C.	16° C.	28° C.			
68 mm	64 mm	60 mm	64 mm	102 mm	22 mm

The temperature limitations recommended by the lubricant-adhesive manufacturer shall be observed.

The seal may be installed in skewed joints only when the average 24 hour air temperature is between 4° and 28° C.

***The temperature used to set the joint opening shall be the approximate average air temperature during the 24 hour period immediately before the bolts are tightened. The Engineer shall establish the temperature.

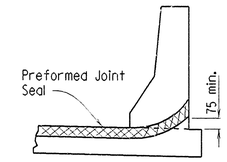

JOINT SEAL PLACEMENT AT CURB

No Scale

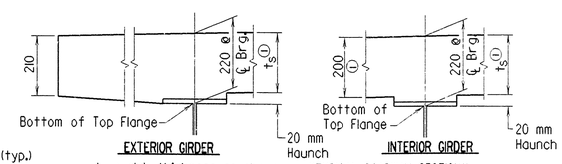

t_s = slab thickness as shown on "TYPICAL ROADWAY SECTION".

① Tolerance when removable deck forming is used is + 12 mm and - 6 mm. Haunch forming is required and shall be adjusted to maintain slab thickness tolerance.

Haunch dimension may vary within the following limits to maintain grade and slab thickness tolerance: Minimum - occurs when top flange contacts bottom reinforcing steel; Maximum - top flange thickness plus 45 mm. No increase in concrete and structural steel quantities will be made to maintain tolerances.

Note: Tolerances shown are applicable only when removable deck forming is used. See Std. Drwg. 36515 for tolerance when permanent steel deck forms are used. Payment for concrete shall be based on removable deck forming.

ADJUSTMENT FOR SLAB THICKNESS TOLERANCE WHEN REMOVEABLE DECK FORMING IS USED

No Scale

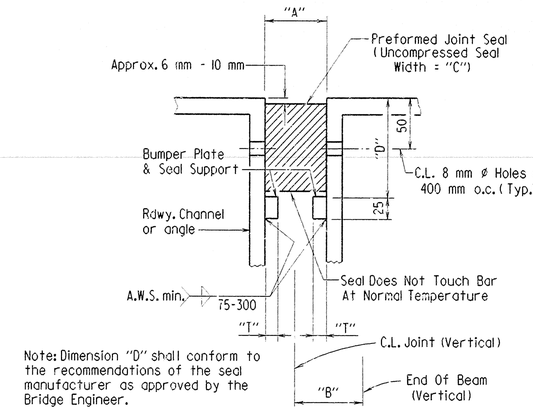

Note: Dimension "D" shall conform to the recommendations of the seal manufacturer as approved by the Bridge Engineer.

DETAIL OF JOINT SEAL & SUPPORT

No Scale

Note: The Seal shall be in one piece (without splices) for the full length of the Joint.

Note: Each expansion joint device shall be blocked in the shop by the fabricator to the dimension shown for 16° C. and the blocking details shall be shown on the Shop Drawings. Blocking shall be placed within 600 mm of each end of the device and with a maximum spacing of 2400 mm.

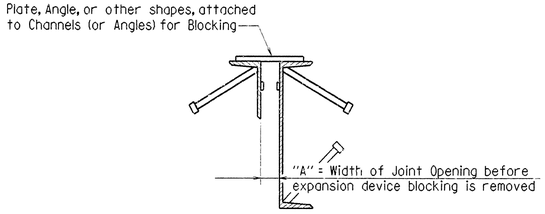

DETAILS FOR BLOCKING EXPANSION PREFORMED JOINT DEVICE

No Scale

EXPANSION DEVICE INSTALLATION AT END BENTS:
The concrete span pour shall be placed before the end bent backwall concrete is placed. After beams are erected the blocked expansion device shall be installed and adjusted for grade. All connection bolts shall be fully tightened prior to placing the deck concrete adjacent to the bent. Immediately prior to pouring the backwall concrete, the blocking shall be removed, the opening adjusted for temperature and grade, and the backwall constructed.

All dimensions are in millimeters (mm) unless otherwise noted.

MICROFILMED
APR 1 1 2000

STATE OF ARKANSAS
Edward T. Fain
REGISTERED PROFESSIONAL ENGINEER
No. 5915
11-23-99
EDWARD T. FAIN

BRIDGE ENGINEER

SHEET 1 OF 5
DETAILS OF
60.96 m CONTINUOUS COMPOSITE W-BEAM UNIT
BRUSH CREEK
WASHINGTON COUNTY
ROUTE 45 SEC. 5
ARKANSAS STATE HIGHWAY COMMISSION
LITTLE ROCK, ARK.

DRAWN BY: MJT DATE: 9/9/99 FILENAME: B040230X3.SI
CHECKED BY: AMS DATE: 11-5-99 SCALE: As Shown
DESIGNED BY: CH DATE: 8-1-99
BRIDGE NO. 02712 DRAWING NO. 40487

METRIC

DATE REVISED	DATE FILMED	DATE REVISED	DATE FILMED	FED. ROAD DIST. NO.	STATE	FED. AID PROJ. NO.	SHEET NO.	TOTAL SHEETS
				6	ARK.			
				JOB NO.		040230	74	143
				(1) 02712		SPAN DTLS.	40488	

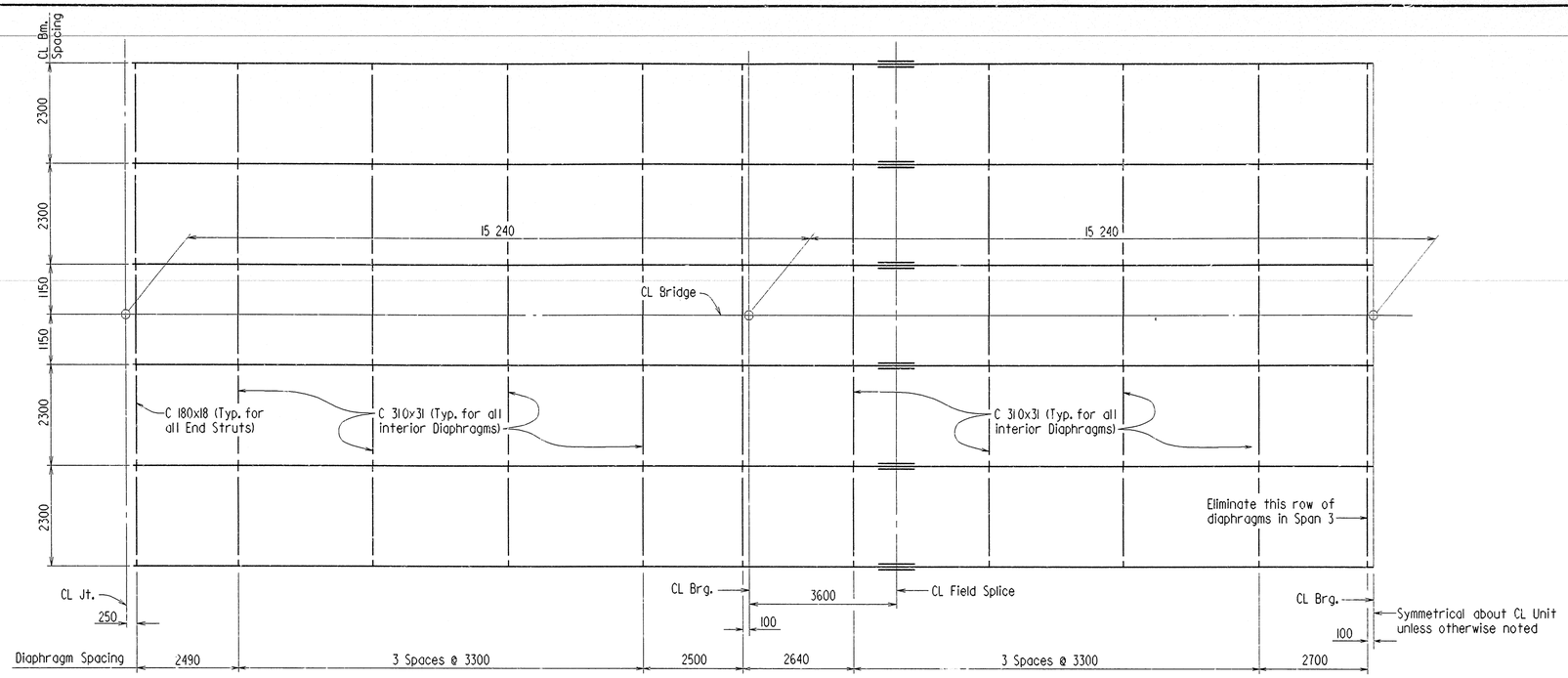

FRAMING PLAN

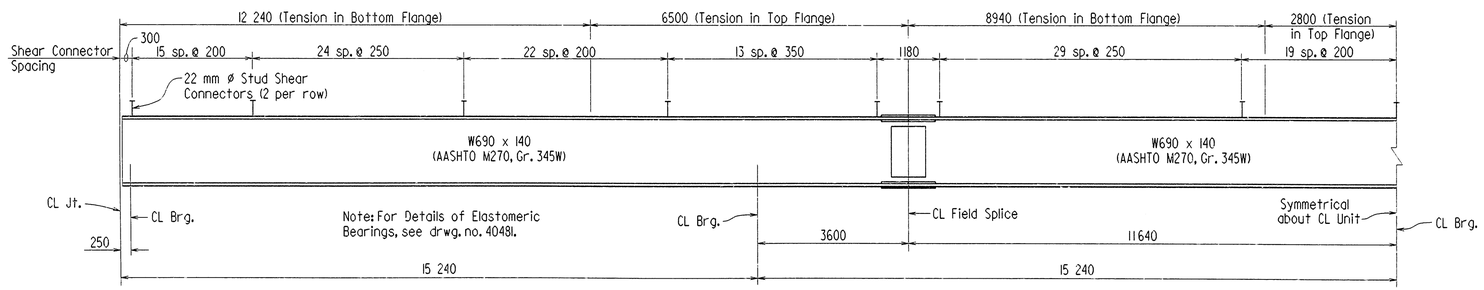

TYP. BEAM ELEVATION

No Scale

Note: Bolted Field Splices may be eliminated or shop welded splices may be substituted with approval of the Bridge Engineer (See Shop Drawings). Payment will be made on the basis of the bolted splices shown.

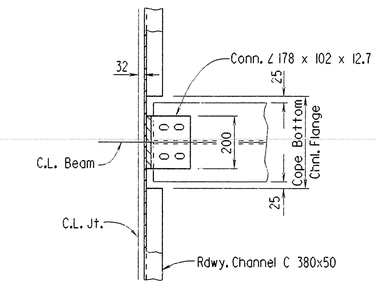

CHANNEL CONNECTION DETAIL

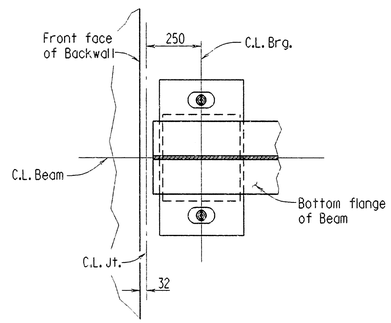

PLAN OF BEARING AT END BENTS

TABLE FOR WELD

Material Thickness of Thicker Part Joined	Minimum Size of Fillet Weld	Single Pass Weld Must Be Used
To 20 mm Inclusive	6 mm	
Over 20 mm	8 mm	

NOTE: When a fillet weld size, as shown on the plans, is larger than the minimum, the first pass shall be that specified for minimum size of fillet weld.

All dimensions are in millimeters (mm) unless otherwise noted.

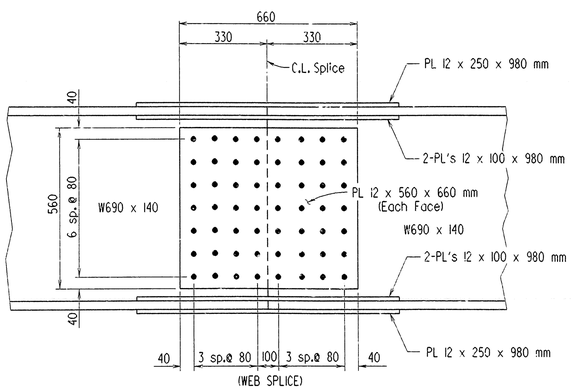

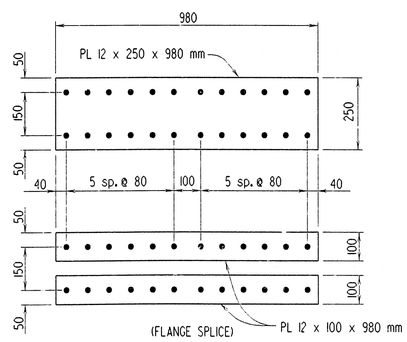

TYPICAL FIELD SPLICE DETAILS

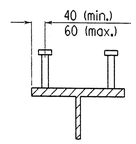

SHEAR CONNECTOR DETAIL

Stud Shear Connectors shall be 22 mm ø x 100 mm long, granular flux filled, solid fluxed or equal, and automatically end welded to the beam flange in accordance with the recommendations of the Manufacturer. 20 mm ø studs may be used in place of the 22 mm ø studs shown, at the ratio of 1.361 -20 mm ø studs in place of one 22 mm ø stud. 22 mm ø studs will be used as basis for measurement of structural steel in shear connectors. Maximum stud spacing = 600 mm.

Notes:
1. All Field Splice Bolts to be M22 H.S. Bolts.
2. All Field Splice plates to be AASHTO M270, Gr. 345W steel.

STATE OF ARKANSAS
Edward T. Fain
REGISTERED PROFESSIONAL ENGINEER
No. 3915
11-23-99
EDWARD T. FAIN

BRIDGE ENGINEER

SHEET 2 OF 5
DETAILS OF
60.96 m CONTINUOUS COMPOSITE W-BEAM UNIT
BRUSH CREEK
WASHINGTON COUNTY
ROUTE 45 SEC. 5
ARKANSAS STATE HIGHWAY COMMISSION
LITTLE ROCK, ARK.

DRAWN BY: MJT DATE: 9/10/99 FILENAME: B040230X3.S2
CHECKED BY: AMS DATE: 11/5/99 SCALE: Not to Scale
DESIGNED BY: CH DATE: 8-1-99
BRIDGE NO. 02712 DRAWING NO. 40488

METRIC

MICROFILMED
APR 11 2000

DATE REVISED	DATE FILMED	DATE REVISED	DATE FILMED	FED. ROAD DIST. NO.	STATE	FED. AID PROJ. NO.	SHEET NO.	TOTAL SHEETS
				6	ARK.			
				JOB NO.		040230	75	143
				(1) 02712		SPAN DTLS.	40489	

SUPERSTRUCTURE GENERAL NOTES

CONSTRUCTION SPECIFICATIONS: Arkansas State Highway and Transportation Department Standard Specifications for Highway Construction, 1996 edition, with applicable supplemental specifications and special provisions. Unless otherwise noted, references to Section and subsection numbers in the plans refer to the Construction Specifications.

DESIGN SPECIFICATIONS: AASHTO Standard Specifications for Highway Bridges, 1996 edition, with current interim specifications.

LIVE LOADING: MS18 METHOD OF DESIGN: LOAD FACTOR

MATERIALS AND STRENGTHS:
Concrete: All concrete shall be Class S(AE) with minimum 28 day compressive strength f'c = 28.0 MPa and shall be poured in the dry.

Structural Steel: AASHTO M270, Gr. 345W (fy=345 MPa)
AASHTO M270, Gr. 250 (fy=250 MPa).

STRUCTURAL STEEL:
All structural steel shall be AASHTO M270, Gr. 345W unless otherwise noted and shall be paid for as "Structural Steel in Beam Spans (M270, Gr. 345W)". M270, Gr. 345W steel shall not be painted. All exposed surfaces to be cleaned in accordance with subsection 807.84(e). Structural steel completely embedded in concrete may be AASHTO M270, Gr. 250.

Structural shapes of equal or greater strength may be substituted for shapes shown if approval is obtained from the Bridge Engineer. Payment will be made on the basis of shapes shown.

Longitudinal beams are considered main load carrying members and shall meet the Longitudinal Charpy V-Notch Test specified in Section 807.05. The Charpy V-Notch Test will not be required on field splice plates.

Flange field splice plates shall be cut and fabricated so that the primary direction of rolling is parallel to the direction of the main tensile and/or compressive stresses.

All beams shall be blocked in their true position in the shop in groups of a minimum of three sections. Beams shall be blocked with webs horizontal. See Section 807.54 (b)(1). The camber, length of sections, distance between bearings, and openings of joints shall be measured with the beams in their true position. This information shall become a part of the permanent records of this job. The component parts shall be match-marked in this assembly and these marks shall be shown on the erection diagram. All beam dimensions are based on a temperature of 16°C. A tolerance of +/- 6 mm is allowed for camber.

Elastomeric Bearings shall be firmly seated in accordance with subsection 808.08. This work to be considered subsidiary to the item "Elastomeric Bearings" and will not be paid for directly.

Field connections shall be bolted with high strength bolts and shall be M20 bolts unless otherwise noted. Bolts shall be placed with heads on the outside face of the exterior beam webs and on bottom of beam flanges.

Holes for M20 high strength bolts in expansion devices, end struts, and diaphragms may be 24 mm ø if a washer is supplied for use under both the nut and the head of the bolt.

Diaphragms and End Struts shall be installed as beams are erected and shall be completely bolted prior to pouring of the concrete deck.

All welding that is to be done during fabrication of structural steel, including temporary welds, shall be detailed on the shop drawings and submitted for approval. If the Contractor or Erector should want to make additional welds, whether temporary or permanent, he shall submit detailed drawings with a formal request to the Bridge Engineer for approval. All welding shall conform to subsection 807.26.

Drawings show general features of design only. Shop drawings shall be made in accordance with the specifications, submitted, and approval secured before fabrication is begun.

REINFORCING STEEL:
The reinforcing steel shall be accurately located in the forms and firmly held in place by steel wire supports sufficient in size and number to prevent displacement during the course of construction. The wire supports will not be paid for directly but will be considered subsidiary to the item of "Reinforcing Steel - Bridge".

CONCRETE:
Concrete in bridge superstructure shall be placed and consolidated for the entire pour before any concrete has taken its initial set. This may require the use of a retarding agent. The concrete bridge deck shall be given a tine finish as specified for final finishing in subsection 802.19 for a Class 5 Tined Bridge Roadway Surface Finish. Movement of the finishing machine across the new concrete shall be on planks placed on the surface and shall be prohibited for 72 hours after finishing the pour. Sufficient concrete must be placed ahead of the strike-off to fully load the beam. If a longitudinal strike-off is used, a vertical camber adjustment must be made in the strike-off to account for the future dead load deflection caused by the railing. A minimum of 72 hours shall elapse between completion of the slab and the pouring of the parapet railing.

The superstructure details shown are for when removeable deck forming is used and are the basis for measurement of Class S(AE) Concrete. See Standard Drawing No. 36515 for allowable modifications and for tolerance when permanent steel bridge deck forms are used.

All exposed corners to be chamfered 20 mm unless otherwise noted.

LOADS TO BEAMS:	Int. Beam	Ext. Beam
Dead Load:		
To W-Beam	11.15 kN/m + 1.3(wt. of W-Bm.)	8.84 kN/m + 1.3(wt. of W-Bm.)
To Composite Beam	4.07 kN/m*	4.07 kN/m*

*Includes 2.30 kN/m Future Wearing Surface.

Live Load:
To Composite Beam — Int. Bm. = 1.372 wheels (+) impact
Ext. Bm. = 1.282 wheels (+) impact

TABLE OF DEFLECTIONS (mm)

Camber for Dead Load Deflection plus Vertical curve ±6mm tolerance.
Deflections shown are from a chord from C.L. Bearing to C.L. Bearing
Negative sign (-) indicates upward deflection.

Span	Point of Deflection	Structural Steel	Structural Steel + Slab	Structural Steel + Slab + Parapet
		All Beams	All Beams	All Beams
Span 1	1.0	0	0	0
	1.1	1	5	5
	1.2	1	9	10
	1.3	2	12	13
	1.4	2	13	14
	1.5	2	13	14
	1.6	2	12	13
	1.7	1	9	10
	1.8	1	5	6
	1.9	0	2	2
	2.0	0	0	0
Span 2	2.1	0	0	0
	2.2	0	0	1
	2.3	0	2	2
	2.4	0	3	3
	2.5	1	3	4
	2.6	0	3	4
	2.7	0	2	3
	2.8	0	1	1
	2.9	0	0	0
	3.0	0	0	0

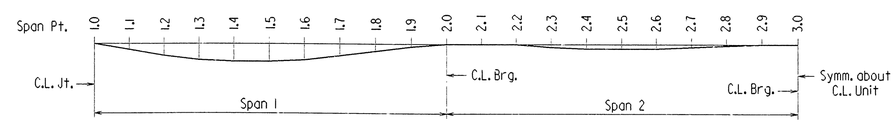

DEAD LOAD DEFLECTION DIAGRAM

No Scale

All dimensions are in millimeters (mm) unless otherwise noted.

MICROFILMED
APR 1 1 2000

STATE OF ARKANSAS
Edward T. Fain
REGISTERED PROFESSIONAL ENGINEER
No. 3915
11-23-99
EDWARD T. FAIN

BRIDGE ENGINEER

SHEET 3 OF 5
DETAILS OF
60.96 m CONTINUOUS COMPOSITE W-BEAM UNIT
BRUSH CREEK
WASHINGTON COUNTY
ROUTE 45 SEC. 5
ARKANSAS STATE HIGHWAY COMMISSION
LITTLE ROCK, ARK.

DRAWN BY: MJT DATE: 9/15/99 FILENAME: B040230X3.S3
CHECKED BY: DATE: 11/5/99 SCALE: As Shown
DESIGNED BY: DATE: 8-1-99
BRIDGE NO. 02712 DRAWING NO. 40489

METRIC

DATE REVISED	DATE FILMED	DATE REVISED	DATE FILMED	FED. ROAD DIST. NO.	STATE	FED. AID PROJ. NO.	SHEET NO.	TOTAL SHEETS
				6	ARK.			
				JOB NO.		040230	76	143
				(1)	02712	SPAN DTLS.	40490	

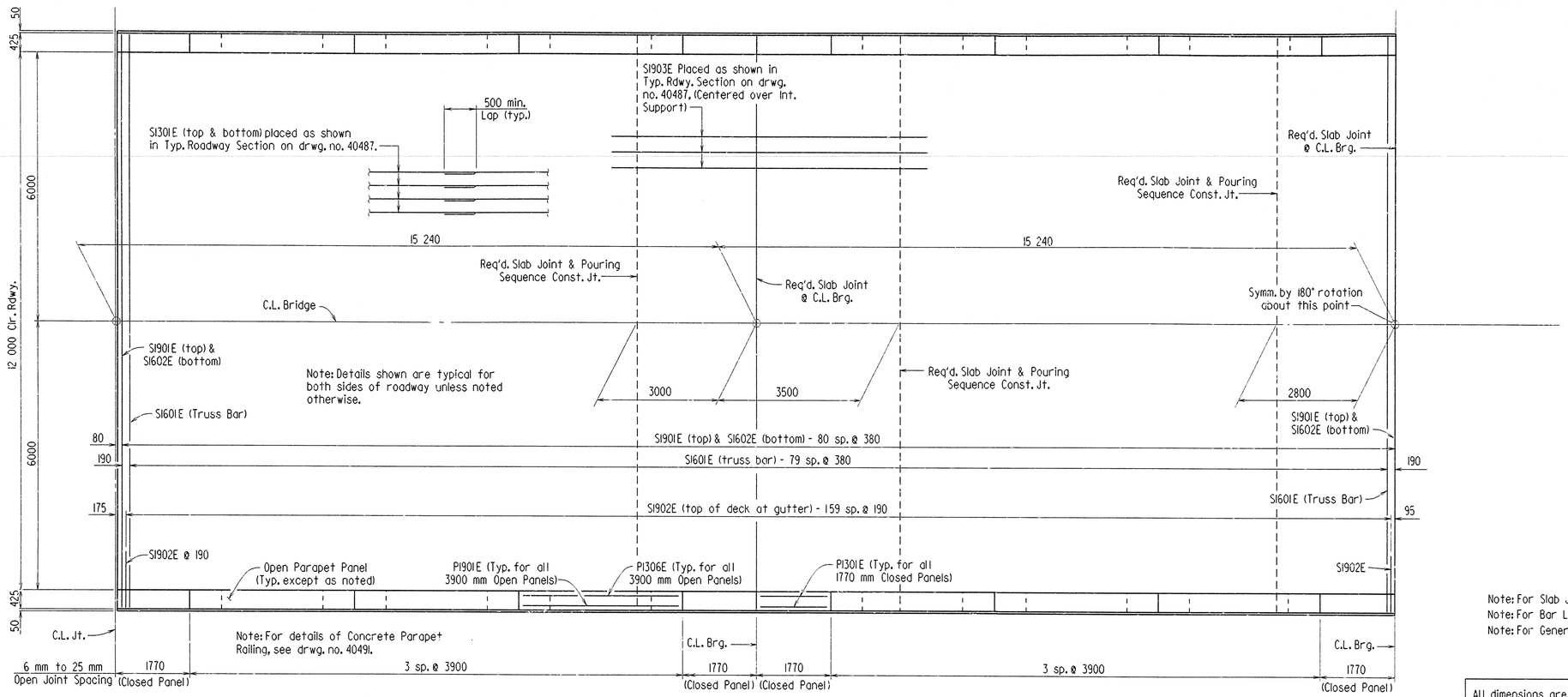

REINFORCING PLAN

Note: For Slab Joint Details, see drwg. no. 40491.
Note: For Bar List and Bending Diagrams, see drwg. no. 40491.
Note: For General Notes, see drwg. no. 40489.

All dimensions are in millimeters (mm) unless otherwise noted.

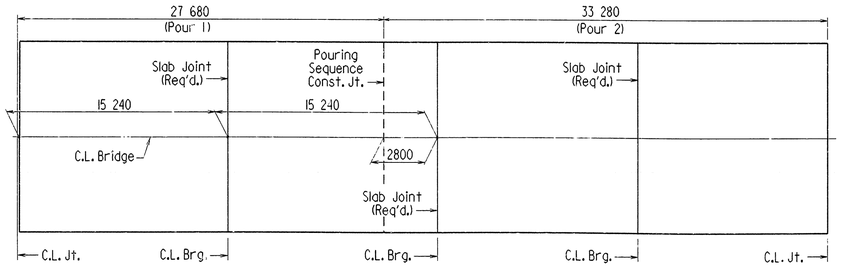

POURING SEQUENCE

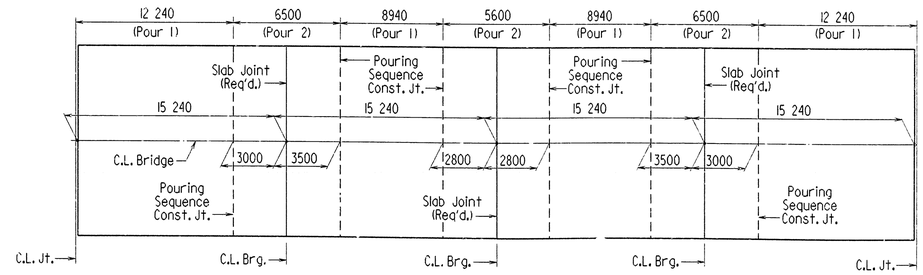

ALTERNATE POURING SEQUENCE

Note: Pours with the same number may be poured simultaneously or separately. All Pours (1) must be placed before Pours (2) can be placed. 48 hours shall elapse between the end of a pour and the start of the next pour. 72 hours shall elapse between the end of a pour and the start of an adjacent pour. Any railing pours made before the entire slab unit has been placed must be approved by the Engineer. Concrete in bridge superstructure shall be consolidated for the entire pour before any concrete has taken its initial set. This may require the use of a retarding agent.

The Contractor must obtain approval from the Bridge Engineer for any deviations from the pouring sequence.

Note: For Concrete Placement Procedure, see drwg. no. 40491.

STATE OF ARKANSAS
Edward T. Fain
REGISTERED PROFESSIONAL ENGINEER
No. 3915
11-23-99
EDWARD T. FAIN

BRIDGE ENGINEER

SHEET 4 OF 5
DETAILS OF
60.96 m CONTINUOUS COMPOSITE W-BEAM UNIT
BRUSH CREEK
WASHINGTON COUNTY
ROUTE 45 SEC. 5
ARKANSAS STATE HIGHWAY COMMISSION
LITTLE ROCK, ARK.

DRAWN BY: MJT DATE: 9/14/99 FILENAME: B040230X3.S4
CHECKED BY: AMS DATE: 11/5/99 SCALE: Not to Scale
DESIGNED BY: CH DATE: 8-1-99
BRIDGE NO. 02712 DRAWING NO. 40490

METRIC

MICROFILMED
APR 11 2000

DATE REVISED	DATE FILMED	DATE REVISED	DATE FILMED	FED. ROAD DIST. NO.	STATE	FED. AID PROJ. NO.	SHEET NO.	TOTAL SHEETS
				6	ARK.			
				JOB NO.		040230	77	143
				(1) 02712		SPAN DTLS.	40491	

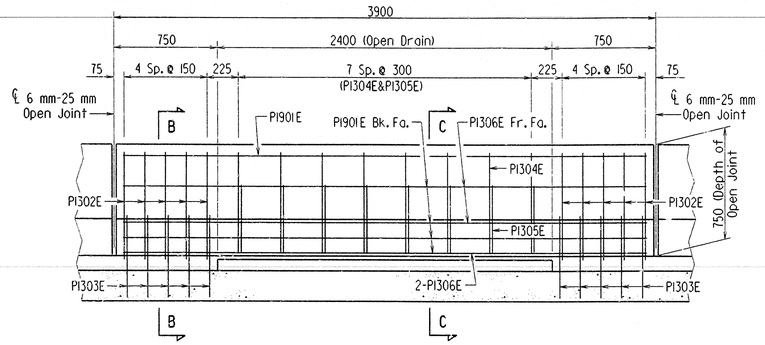

DETAIL OF OPEN PARAPET PANEL

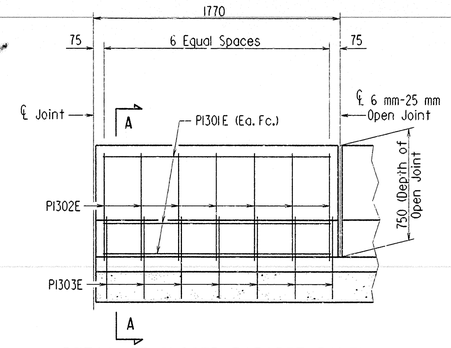

DETAIL OF CLOSED PARAPET PANEL

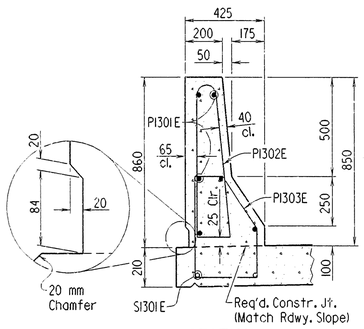

SECTION A-A

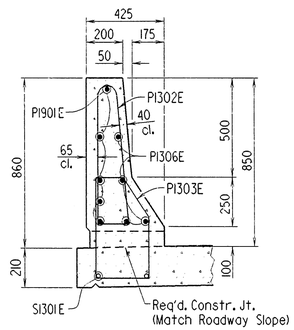

SECTION B-B

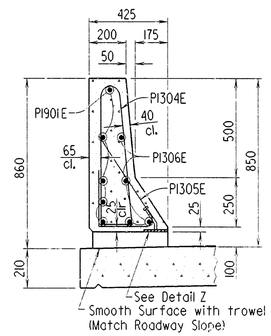

SECTION C-C

BAR LIST (UNIT TOTAL)

MARK	NO. REQ'D.	LENGTH	P.D.
SI301E	582	10 580	Str.
SI601E	160	13 210	76
SI602E	161	12 850	Str.
SI901E	161	12 850	Str.
SI902E	640	1450	Str.
SI903E	138	9500	Str.
PI301E	96	1670	Str.
PI302E	352	1950	50
PI303E	352	1700	50
PI304E	192	1800	50
PI305E	192	950	50
PI306E	96	3800	Str.
PI901E	120	3800	Str.

Bending Diagrams

(Dimensions are out to out of bars.)

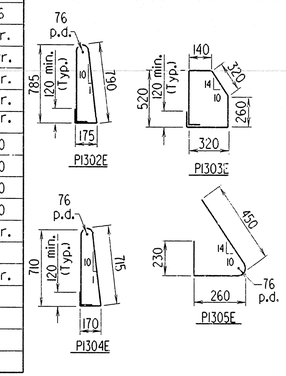

*12 mm Overtolerance, No Undertolerance.

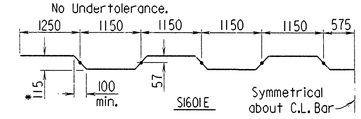

Note: All bars designated with an "E" suffix are to be epoxy coated.

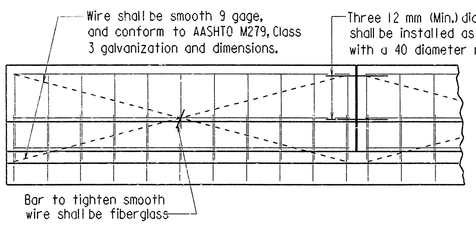

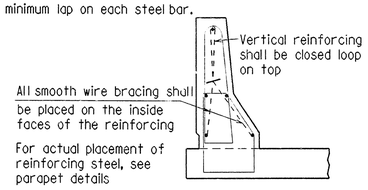

All panels shall be braced as shown to prevent racking. All open joints shall be sawed as soon as practical to a minimum width of 6 mm. To control cracking before sawing all joints must be grooved before the concrete is set. Sawing of the joints must be controlled so it will follow the grooved joint.

The extruded parapet shall conform to the horizontal and vertical lines shown on the plans or as directed by the Engineer and shall present a smooth, uniform appearance and texture. Exposed surfaces may be given a light brush finish or a Class 3, Textured Coating Finish, in place of Class 2, Rubbed Finish.

DETAILS OF OPTIONAL SLIPFORMING OF CONCRETE PARAPET RAIL

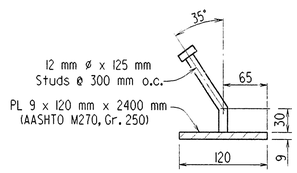

DETAIL Z

Note:
The surfaces of the 9 mm Plates which will not be in contact with concrete shall be painted in accordance with Section 638, or as approved by the Engineer. Only one coat is required and shall be applied in the fabricator's shop. Painting will not be paid for directly, but will be considered subsidiary to the item "Structural Steel in Beam Spans (M270, Gr. 345W)."

Note: Studs and Plates shall be measured and paid for as "Structural Steel in Beam Spans (M270, Gr. 345W)."

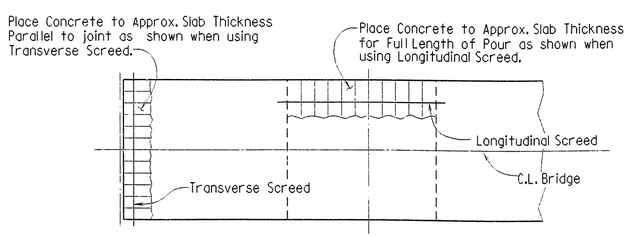

CONCRETE PLACEMENT PROCEDURE

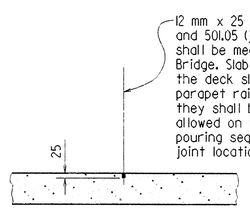

12 mm x 25 mm Type 6 Joint Sealer. See Sections 501.02 (h) and 501.05 (j) of the Standard Specifications. Joint Sealer shall be measured and paid for as Class S(AE) Concrete-Bridge. Slab joints shall extend to the outside edge of the deck slab. Slab joints shall be installed before the parapet railing is poured. If slab joints are to be sawed, they shall be sawed before any vehicular traffic is allowed on the unit. Slab joints shall be placed at all pouring sequence construction joints and required slab joint locations.

SLAB JOINT DETAIL

MICROFILMED
APR 11 2000

STATE OF ARKANSAS
Edward T. Fain
REGISTERED PROFESSIONAL ENGINEER
No. 3915
11-23-99
EDWARD T. FAIN

BRIDGE ENGINEER

All dimensions are in millimeters (mm) unless otherwise noted.

SHEET 5 OF 5
DETAILS OF
60.96 m CONTINUOUS COMPOSITE W-BEAM UNIT
BRUSH CREEK
WASHINGTON COUNTY
ROUTE 45 SEC. 5
ARKANSAS STATE HIGHWAY COMMISSION
LITTLE ROCK, ARK.

DRAWN BY: MJT DATE: 9/14/99 FILENAME: B040230X3.S5
CHECKED BY: AMS DATE: 11/5/99 SCALE: Not to Scale
DESIGNED BY: CH DATE: 8-1-99

BRIDGE NO. 02712 DRAWING NO. 40491

METRIC