DATE REVISED	DATE FILMED	DATE REVISED	DATE FILMED	FED. ROAD DIST. NO.	STATE	FED. AID PROJ. NO.	SHEET NO.	TOTAL SHEETS
				6	ARK.			
				JOB NO.		F-30-7	7	35

(1) 4603 QUANTITIES 29449

SCHEDULE OF BRIDGE QUANTITIES

BRIDGE NO. / CODE NO. / NAME-PLATE TITLE	ITEM NO.	801	802	802	802	802	803	804	** 805	812	816	816	205
	ITEM / UNIT OF STRUCTURE	UNCLASSIFIED EXCAVATION FOR STRUCTURES - BRIDGE	CLASS S CONCRETE	31' PRECAST CONCRETE CURB UNITS	31' PRECAST CONCRETE INTERIOR UNITS	31' PRECAST PARAPET RAIL UNITS	BOILED LINSEED OIL	REINFORCING STEEL (GR. 60)	STEEL PILING (H.P. 10 x 42)	BRIDGE NAME PLATE (TYPE C)	DUMPED RIPRAP	FILTER BLANKET	REMOVAL OF EXISTING BRIDGE STRUCTURE (SITE NO. 1)
	UNIT	CU. YD.	CU. YD.	EACH	EACH	EACH	GALLON	LB.	LIN. FT.	EACH	CU. YD.	SQ. YD.	LUMP SUM
4603 / X020 / CLEAR CREEK	END BENT NOS. 1 & 4		15.20					2200	96	1	116	232	
	INT. BENT NOS. 2 & 3	73	28.20					4110					
	3-31'-0" PRECAST CONCRETE SPANS			6	15	6	6.6						
	TOTAL FOR JOB NO. BR-30-2	*73	43.40	6	15	6	6.6	6310	96	1	116	232	1.0

* INCLUDES 34 CU. YDS. OF ROCK EXCAVATION

** REFER TO SS 807-1

GARY ASHLEY
DESIGN SECTION SUPERVISOR

SCHEDULE OF BRIDGE QUANTITIES
CLEAR CREEK BR. & APPRS.
HOT SPRING COUNTY
FAS ROUTE 1460 SEC.
ARKANSAS STATE HIGHWAY COMMISSION
LITTLE ROCK, ARK.

DRAWN BY: EJK DATE: 11-10-87
CHECKED BY: AKW DATE: 11-10-87 SCALE: NONE
DESIGNED BY: DATE:

Vernal Pinkerton
BRIDGE ENGINEER

BRIDGE NO. 4603 DRAWING NO. 29449

DATE REVISED	DATE FILMED	DATE REVISED	DATE FILMED	FED. ROAD DIST. NO.	STATE	FED. AID PROJ. NO.	SHEET NO.	TOTAL SHEETS
				6	ARK.			
				JOB NO.		F-30-7	11	35
				1	4603	LAYOUT	29450	

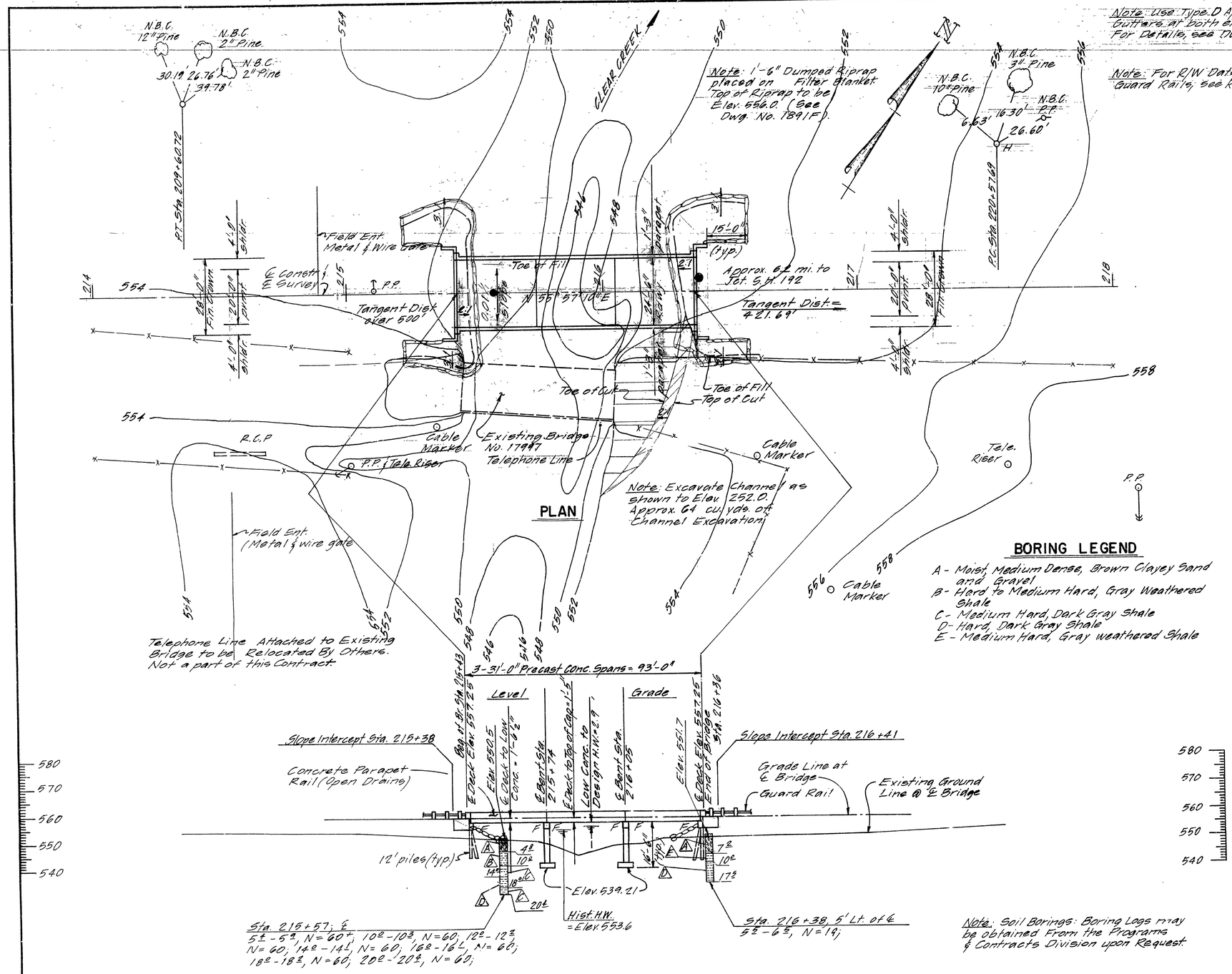

GENERAL NOTES

BENCH MARK:
TBM #2 A CHISELED SQUARE ON NE WINGWALL OF CONC. ABUTMENT OF BRIDGE OVER CLEAR CREEK 28' RT. CENTERLINE STA. 216 + 07 ELEV. 535.57.

DESIGN SPECIFICATIONS: AASHTO STANDARD SPECIFICATIONS FOR HIGHWAY BRIDGES, 1983 EDITION WITH CURRENT INTERIMS.

CONSTRUCTION SPECIFICATIONS: ARKANSAS STATE HIGHWAY COMMISSION STANDARD SPECIFICATIONS FOR HIGHWAY CONSTRUCTION, EDITION OF 1988 AND APPLICABLE SPECIAL PROVISIONS.

DESIGN LIVE LOAD: HS20

DESIGN METHOD: LOAD FACTOR

CONCRETE: CONCRETE IN SUBSTRUCTURE SHALL BE CLASS "S". CONCRETE IN THE SUPERSTRUCTURE SHALL BE CLASS "S". ALL CONCRETE SHALL HAVE A MINIMUM 28 DAY COMPRESSIVE STRENGTH, f'c = 3500 PSI, AND SHALL BE POURED IN THE DRY. EXPOSED CORNERS TO BE CHAMFERED 3/4" UNLESS OTHERWISE NOTED.

REINFORCING STEEL: REINFORCING STEEL SHALL CONFORM TO ASTM A615 OR A617, GRADE 60 (f_y = 60,000 PSI) , OR AS NOTED ON THE DETAIL DRAWINGS.

FOOTINGS: FOOTINGS FOR BENTS 2 AND 3 SHALL BE SET A MINIMUM OF 1'-0" INTO MATERIAL DESIGNATED ON THE BORING LOGS AS HARD OR MEDIUM HARD DARK GRAY SHALE. FOUNDATIONS SHALL BE PREPARED IN ACCORDANCE WITH SUBSECTION 801.04 OF THE STANDARD SPECIFICATIONS.

PILING: PILING IN BENTS 1 & 4 SHALL BE HP 10 X 42 AND SHALL BE DRIVEN WITH AN APPROVED AIR STEAM OR DIESEL HAMMER TO A MINIMUM BEARING CAPACITY OF 55 TONS PER PILE AND INTO THE MATERIAL DESIGNATED AS HARD TO MEDIUM HARD GRAY WEATHERED SHALE ON THE BORING LOGS. LENGTHS SHOWN ARE FOR ESTIMATING QUANTITIES AND FOR USE IN DETERMINING PAYMENT FOR CUT-OFF OR BUILD-UP IN ACCORDANCE WITH THE SPECIFICATIONS. PILES IN END BENTS 1 & 4 SHALL BE DRIVEN AFTER EMBANKMENT TO BOTTOM OF CAP IS IN PLACE.

FOR DETAILS OF PRECAST CONC. SPANS, SEE DWG. NO. 15200 & 15230
FOR DETAILS OF END BENT NOS. 1 & 4 , SEE DWG. NO. 15202
FOR DETAILS OF INT. BENT NOS. 2 & 3 , SEE DWG. NO. 29451
FOR DETAILS OF APPROACH GUTTERS, SEE DWG. NO. 2016D.

DECK FINISH: THE ROADWAY SURFACE OF THE CONCRETE BRIDGE DECK SHALL BE GIVEN A TINE FINISH AS SPECIFIED FOR FINAL FINISHING IN SUBSECTION 802.20 FOR CLASS S, ROADWAY SURFACE FINISH.

THE EXISTING BRIDGE NO. 17997 IS 18' X 60' (4 SPANS) AND CONSISTS OF A TIMBER DECK AND STEEL STRINGERS SUPPORTED BY A CONCRETE SUBSTRUCTURE.

AFTER THE NEW BRIDGE IS COMPLETED AND OPEN TO TRAFFIC, THE CONTRACTOR SHALL REMOVE THE EXISTING BRIDGE IN ACCORDANCE WITH SECTION 205 OF THE STANDARD SPECIFICATIONS. THE TIMBER DECK AND STEEL STRINGERS SHALL REMAIN THE PROPERTY OF THE COUNTY. ALL OTHER MATERIAL SHALL BECOME THE PROPERTY OF THE CONTRACTOR.

LAYOUT OF BRIDGE OVER CLEAR CREEK

CLEAR CREEK BR. & APPRS.
HOT SPRING COUNTY
F.A.S. ROUTE 1460 SEC.
ARKANSAS STATE HIGHWAY COMMISSION
LITTLE ROCK, ARK.

DRAWN BY: EJK DATE: 4-8-87
CHECKED BY: GMC DATE: 9-2-87
DESIGNED BY: RCW DATE: March 87
SCALE: 1" = 20'

Vernal Pinkerton
BRIDGE ENGINEER

BRIDGE NO. 4603 DRAWING NO. 29450

DATE REVISED	DATE FILMED	DATE REVISED	DATE FILMED	FED. ROAD DIST. NO.	STATE	FED. AID PROJ. NO.	SHEET NO.	TOTAL SHEETS
				6	ARK.			
				JOB NO.		F-30-7	11	35
				4603	LAYOUT	29450		

1

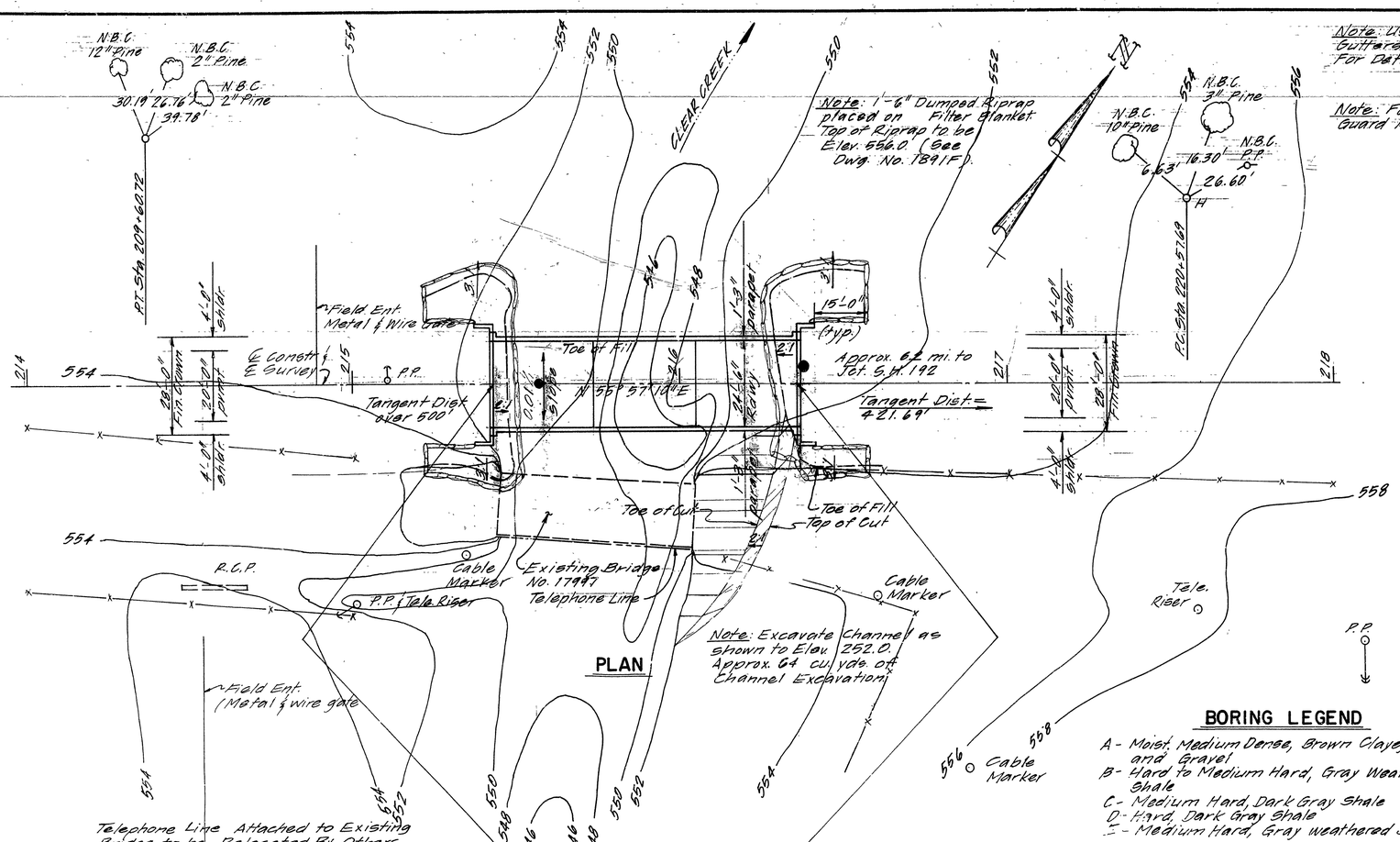

PLAN

BORING LEGEND

A - Moist, Medium Dense, Brown Clayey Sand and Gravel
B - Hard to Medium Hard, Gray Weathered Shale
C - Medium Hard, Dark Gray Shale
D - Hard, Dark Gray Shale
E - Medium Hard, Gray weathered Shale

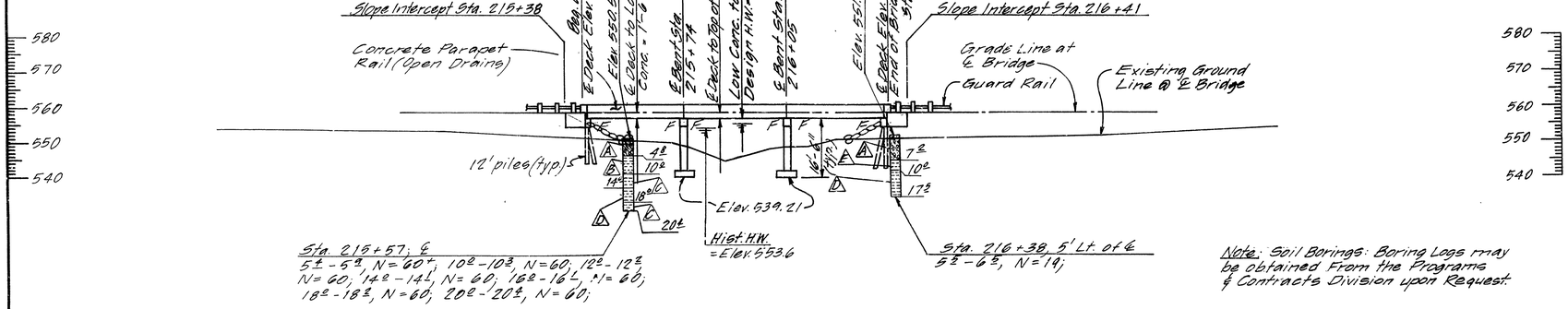

Note: Soil Borings: Boring Logs may be obtained From the Programs & Contracts Division upon Request.

* Based on No Overtopping

BENT NO. 1 2 3 4

DESIGN FLOOD

Q_{25} = 4090 c.f.s.
Normal W.S. = Elev. 554.2
W.S. with Backwater = Elev. 556.8

ELEVATION

D.A. = 5.3 sq. mi.

BASIC FLOOD

Q_{100} = 6120 c.f.s.
Normal W.S. = Elev. 555.2
* W.S. with Backwater = 559.5

214 215 216 217 218

GENERAL NOTES

BENCH MARK:
TBM #2 A CHISELED SQUARE ON NE WINGWALL OF CONC. ABUTMENT OF BRIDGE OVER CLEAR CREEK 28' RT. CENTERLINE STA. 216 + 07 ELEV. 555.57.

DESIGN SPECIFICATIONS: AASHTO STANDARD SPECIFICATIONS FOR HIGHWAY BRIDGES, 1983 EDITION WITH CURRENT INTERIMS.

CONSTRUCTION SPECIFICATIONS: ARKANSAS STATE HIGHWAY COMMISSION STANDARD SPECIFICATIONS FOR HIGHWAY CONSTRUCTION, EDITION OF 1988 AND APPLICABLE SPECIAL PROVISIONS.

DESIGN LIVE LOAD: HS20

DESIGN METHOD: LOAD FACTOR

CONCRETE: CONCRETE IN SUBSTRUCTURE SHALL BE CLASS "S". CONCRETE IN THE SUPERSTRUCTURE SHALL BE CLASS "S". ALL CONCRETE SHALL HAVE A MINIMUM 28 DAY COMPRESSIVE STRENGTH, f'c = 3500 PSI, AND SHALL BE POURED IN THE DRY. EXPOSED CORNERS TO BE CHAMFERED 3/4" UNLESS OTHERWISE NOTED.

REINFORCING STEEL: REINFORCING STEEL SHALL CONFORM TO ASTM A615 OR A617, GRADE 60 (fy = 60,000 PSI) , OR AS NOTED ON THE DETAIL DRAWINGS.

FOOTINGS: FOOTINGS FOR BENTS 2 AND 3 SHALL BE SET A MINIMUM OF 1'-0" INTO MATERIAL DESIGNATED ON THE BORING LOGS AS HARD OR MEDIUM HARD DARK GRAY SHALE. FOUNDATIONS SHALL BE PREPARED IN ACCORDANCE WITH SUBSECTION 801.04 OF THE STANDARD SPECIFICATIONS.

PILING: PILING IN BENTS 1 & 4 SHALL BE HP 10 X 42 AND SHALL BE DRIVEN WITH AN APPROVED AIR STEAM OR DIESEL HAMMER TO A MINIMUM BEARING CAPACITY OF 55 TONS PER PILE AND INTO THE MATERIAL DESIGNATED AS HARD TO MEDIUM HARD GRAY WEATHERED SHALE ON THE BORING LOGS. LENGTHS SHOWN ARE FOR ESTIMATING QUANTITIES AND FOR USE IN DETERMINING PAYMENT FOR CUT-OFF OR BUILD-UP IN ACCORDANCE WITH THE SPECIFICATIONS. PILES IN END BENTS 1 & 4 SHALL BE DRIVEN AFTER EMBANKMENT TO BOTTOM OF CAP IS IN PLACE.

FOR DETAILS OF PRECAST CONC. BEAMS, SEE DWG. NO. 15200 & 15230
FOR DETAILS OF END BENT NOS. 1 & 4 , SEE DWG. NO. 15202
FOR DETAILS OF INT. BENT NOS. 2 & 3 , SEE DWG. NO. 29451
FOR DETAILS OF APPROACH GUTTERS, SEE DWG. NO. 2016D.

DECK FINISH: THE ROADWAY SURFACE OF THE CONCRETE BRIDGE DECK SHALL BE GIVEN A TINE FINISH AS SPECIFIED FOR FINAL FINISHING IN SUBSECTION 802.20 FOR CLASS S, ROADWAY SURFACE FINISH.

THE EXISTING BRIDGE NO. 17997 IS 18' X 60' (4 SPANS) AND CONSISTS OF A TIMBER DECK AND STEEL STRINGERS SUPPORTED BY A CONCRETE SUBSTRUCTURE.

AFTER THE NEW BRIDGE IS COMPLETED AND OPEN TO TRAFFIC, THE CONTRACTOR SHALL REMOVE THE EXISTING BRIDGE IN ACCORDANCE WITH SECTION 205 OF THE STANDARD SPECIFICATIONS. THE TIMBER DECK AND STEEL STRINGERS SHALL REMAIN THE PROPERTY OF THE COUNTY. ALL OTHER MATERIAL SHALL BECOME THE PROPERTY OF THE CONTRACTOR.

LAYOUT OF BRIDGE OVER CLEAR CREEK

CLEAR CREEK BR. & APPRS.
HOT SPRING COUNTY
F.A.S. ROUTE 1460 SEC.
ARKANSAS STATE HIGHWAY COMMISSION
LITTLE ROCK, ARK.

DRAWN BY: EJK DATE: 4-8-87
CHECKED BY: GMC DATE: 9-2-87
DESIGNED BY: JPW DATE: Mar-4-87
SCALE: 1" = 20'

Vernal Pinkerton
BRIDGE ENGINEER

BRIDGE NO. 4603 DRAWING NO. 29450

						A.R.K.			
					JOB NO.	F-30-7	12	35	

① 4603 INT. BENT DTLS. 29451

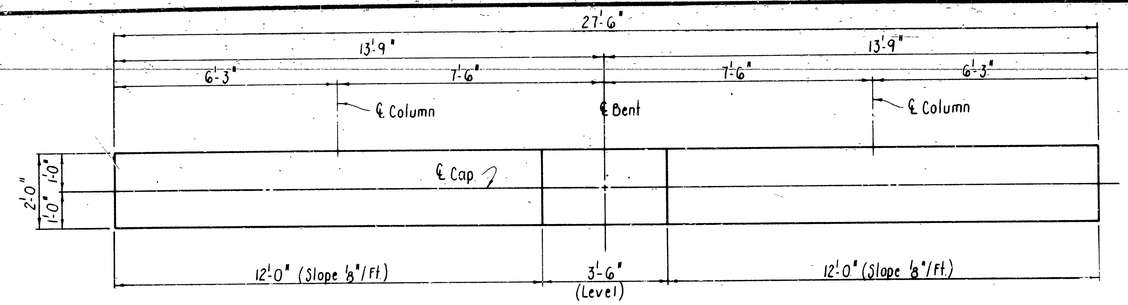

PLAN
Scale: 1/2"=1'-0"

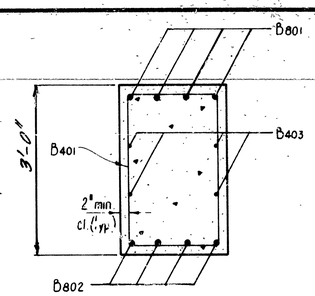

SECTION B-B
No Scale

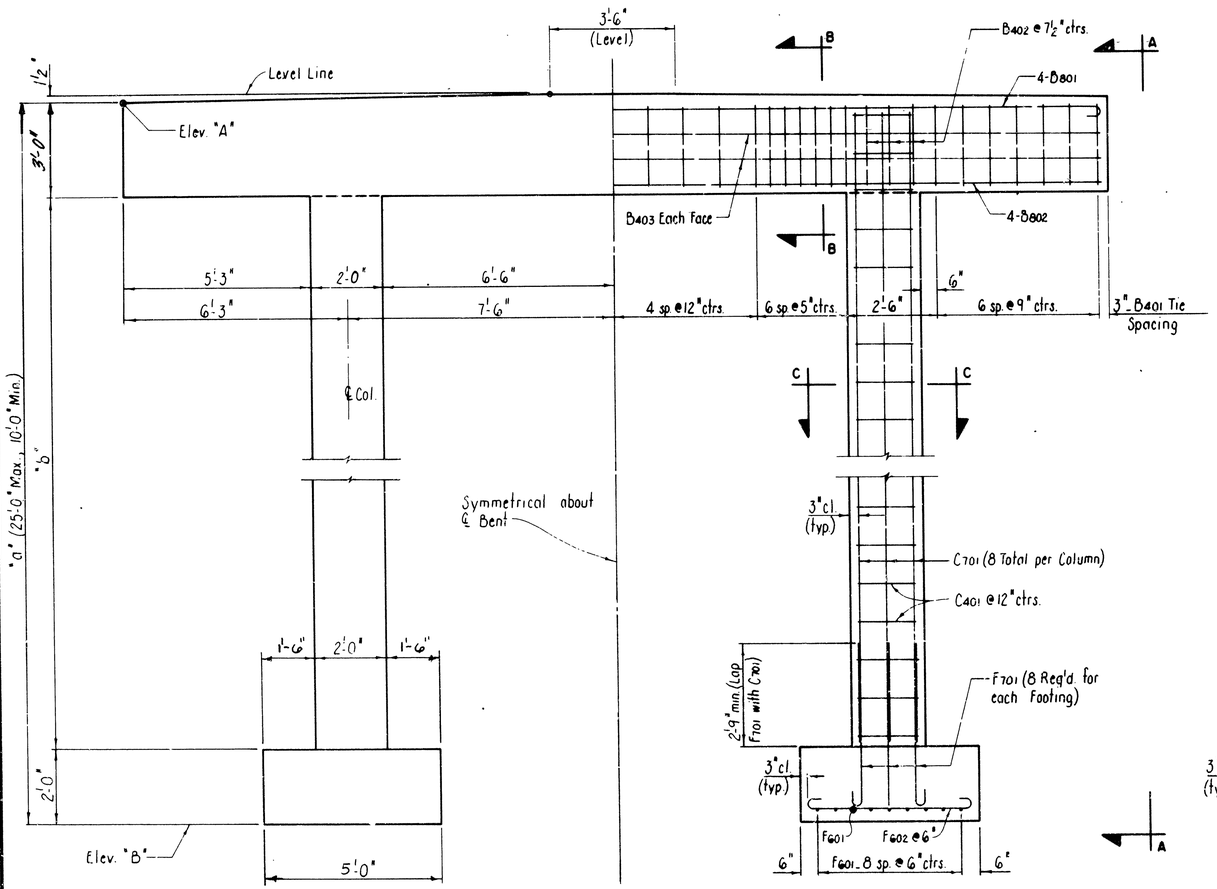

ELEVATION
Scale: 1/2"=1'-0"

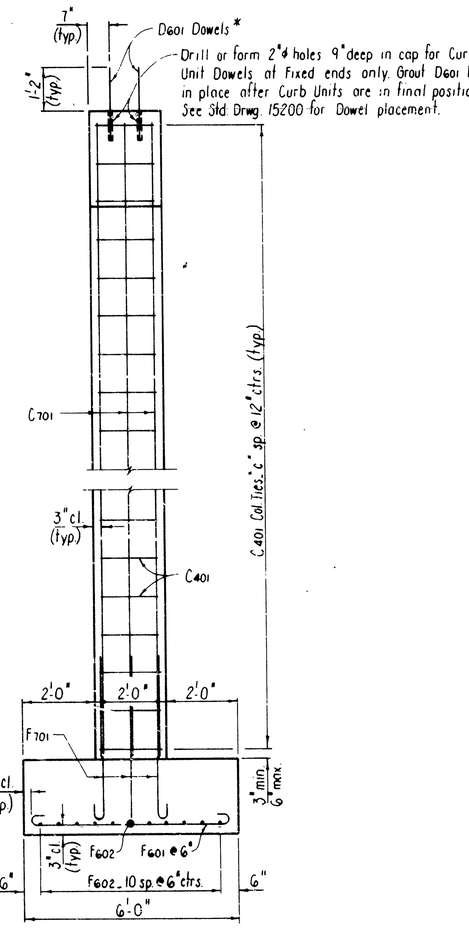

VIEW A-A
Scale: 1/2"=1'-0"

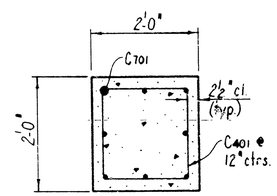

SECTION C-C
Scale: 3/4"=1'-0"

BAR LIST_EACH BENT

MARK	NO. REQ'D.	LENGTH	PIN DIA.
B401	35	9'-0"	2"
B402	6	6'-10"	2"
B403	4	27'-1"	Str.
B801	4	28'-11"	6"
B802	4	27'-1"	Str.
D601*	4	1'-11"	Str.
C401	"d"	7'-2"	2"
C701	16	"e"	Str.
F601	18	6'-10"	4 1/2"
F602	22	5'-10"	4 1/2"
F701	16	5'-3"	5 1/4"

BENDING DIAGRAMS

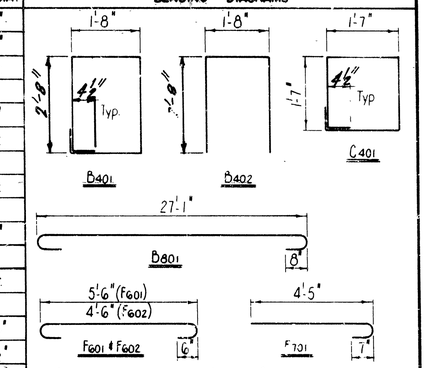

Note: Dimensions are out to out of Bars.

*Req'd. for 'Fixed-Fixed' Bents only.

GENERAL NOTES

ALL CONCRETE TO BE CLASS "S" AND SHALL BE POURED IN THE DRY. ALL EXPOSED CORNERS TO BE CHAMFERED 3/4" UNLESS OTHERWISE NOTED.

SPECIFICATIONS: ARKANSAS STATE HIGHWAY COMMISSION STANDARD SPECIFICATIONS FOR HIGHWAY CONSTRUCTION, EDITION OF 1988 AND APPLICABLE SPECIAL PROVISIONS.

LIVE LOAD: HS20-44

DESIGN SPECIFICATIONS: AASHTO STANDARD SPECIFICATIONS FOR HIGHWAY BRIDGES, EDITION OF 1983.

METHOD OF DESIGN: LOAD FACTOR

CONCRETE: ALL CONCRETE SHALL BE CLASS "S" WITH A MINIMUM 28 DAY COMPRESSIVE STRENGTH f'c= 3500 PSI.

REINFORCING STEEL: REINFORCING STEEL SHALL CONFORM TO ASTM A615 OR A617, GRADE 60, (YIELD STRENGTH = 60,000 PSI).

IN GENERAL, CONSTRUCTION JOINTS SHALL BE PROVIDED WITH KEYS NOT LESS THAN 1-1/2" COVERING THE MIDDLE THIRD OF BOTH DIMENSIONS.

TABLE OF VARIABLES

BENT NO.	"a"	"b"	"c"	"d"	"e"	ELEV. "A"	ELEV. "B"
243	16'-6"	11'-6"	13"	28"	13'-9"	555.71'	539.21'

TABULAR DATA BY: EJK CHECKED BY: ARW

DETAILS OF STANDARD
INTERMEDIATE COLUMN BENTS
FOR 31' PRECAST CONC. SPANS
24'-6" CL. RDWY.

ROUTE SEC.

ARKANSAS STATE HIGHWAY COMMISSION
LITTLE ROCK, ARK.

DRAWN BY: KMG DATE: 16 NOV. 84
CHECKED BY: KDH DATE: 19 DEC. 84
DESIGNED BY: Std DATE: SCALE: AS SHOWN

Kersal Pinkerton
BRIDGE ENGINEER

BRIDGE NO. 4603 DRAWING NO. 29451

DATE REVISED	DATE FILMED	DATE REVISED	DATE FILMED	FED ROAD NO	STATE	FED AID PROJ NO	SHEET NO	TOTAL SHEETS
12-10-85	842-12-11-85	7-2-87	563-7-15-87	6	ARK			
4-3-87	848-4-9-87	7-15-88	563-7-15-88	JOB NO				
5-8-89	5-4-87	5-12-89						
6-4-92	6-24-92							

(1) 31' FSLAB STD — 5200

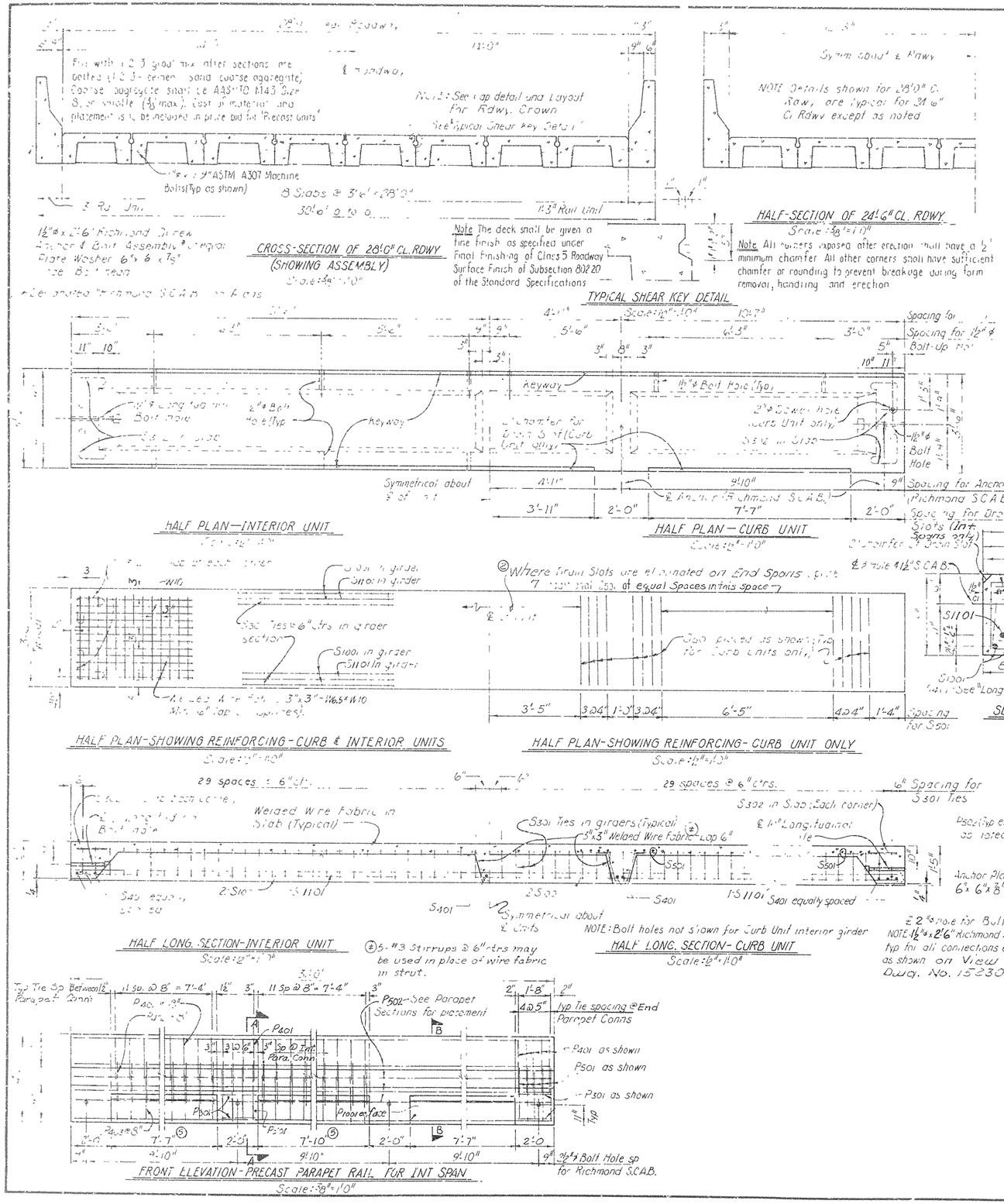

BAR LIST FOR PRECAST BRIDGE COMPONENTS

PRECAST SLAB UNIT

MARK	NO. REQ'D. CURB UNIT	NO. REQ'D. INT UNIT	LENGTH	PIN DIA
S301	122	122	3'-3"	1/2"
S302	1	1	9"	1/2"
S401	10	5	3'-2"	Str
S501	26		3'-6"	3/4"
S601	(8)	-	1'-11"	Str
S1001	4	4	30'-8"	Str
S1101	2	2	30'-8"	Str.

▷ All Reinf Bars marked with flags may be Grade 40 or Grade 60 Steel. All others must be Grade 60.

PRECAST PARAPET RAIL UNIT

MARK	NO. REQ'D. END SPAN	NO. REQ'D. INT. SPAN	LENGTH	PIN DIA
P301	2	8	5'-4"	1/2"
P401		54	4'-8"	2"
P402		36	3'-12"	2"
P403		36	5'-8	2"
P501		18	7'-2"	1/2"
P502		9	30'-8"	Str
P1001		2	30'-8"	Str

See Dwg. no. 15230

(A) Plus 7 additional for each Drain Slot eliminated
(B) 2 per fixed end of each span

BENDING DIAGRAMS

GENERAL NOTES:

REINFORCING STEEL SHALL BE ASTM A615, GRADE 40 OR 60 AS NOTED. WIRE FABRIC SHALL BE ASTM A185. REINFORCING STEEL AND WIRE FABRIC SHALL BE ACCURATELY LOCATED IN THE FORMS AND SECURELY HELD IN PLACE BY STEEL WIRE SUPPORTS.

CONCRETE FOR PRECAST UNITS SHALL BE CLASS S(AE) EXCEPT THAT THE COARSE AGGREGATE SIZE SHALL MEET AASHTO M43, SIZE 57 (3/4" MAX.). (5)

STANDARD WASHERS SHALL BE PROVIDED UNDER HEAD AND NUT OF ALL BOLTS IN CONNECTION WITH CONCRETE. BOLTS SHALL BE A307. ALL BOLTS, WASHERS AND NUTS SHALL BE GALVANIZED TO MEET ASTM A153 OR CADMIUM PLATED.

SCREW ANCHOR AND BOLT ASSEMBLY (SCAB) SHALL BE 1 1/2"ø RICHMOND SCREW ANCHOR OR EQUAL, AND HAVE MINIMUM ULTIMATE STRENGTH OF 65,000 PSI IN TENSION. ASSEMBLY SHALL BE GALVANIZED TO MEET ASTM A153. WASHERS FOR SCAB SHALL BE A36 AND BE GALVANIZED TO MEET ASTM A123.

CAMBER REQUIRED FOR DEAD LOAD DEFLECTION IS 3/8 INCH. DEVIATION OF MORE THAN 1/4 INCH IN DIMENSION OF GRADE OR LINE WILL BE CAUSE FOR REJECTION.

CONCRETE, REINFORCING, WIRE MESH, BAR SUPPORTS, BOLTS, NUTS, WASHERS, THREADED ANCHORS, GROUT, ROOFING FELT AND EXPANSION JOINT FILLERS ARE CONSIDERED SUBSIDIARY TO "PRECAST UNITS".

ENDS OF ADJACENT UNITS SHALL BE COATED (1/16" ±) WITH ASPHALTIC PAINT. THE COATING SHALL ADHERE AND SET FIRM AND ITS SOFTENING POINT SHALL NOT BE LESS THAN 140°F.

BID ITEMS SHALL BE AS FOLLOWS:
"31' PRECAST CONCRETE CURB UNITS"
"31' PRECAST CONCRETE INTERIOR UNITS"
"31' PRECAST PARAPET RAIL UNITS"

DESIGN SPECIFICATIONS: AASHTO 1989.

METHOD OF DESIGN: LOAD FACTOR

LIVE LOADING: HS 20, .9 WHEEL PER UNIT (5)

MATERIALS: 28 DAY COMPRESSIVE STRENGTH OF CONCRETE = 4000 PSI
YIELD STRENGTH OF GRADE 40 REINFORCING = 40,000 PSI
YIELD STRENGTH OF GRADE 60 REINFORCING = 60,000 PSI
YIELD STRENGTH OF WIRE FABRIC = 65,000 PSI

REVISIONS

(1) 12-10-85 Revised Details
(2) 4-3-87 Revised Guard Rail Connection & S501 Spacing
(3) 5-8-87 Revised Pay Items
(4) 7-2-87 Revised Precast Parapet Rail for End Span by J.P.S.
(5) 5-12-89 Revised Concrete Type, Parapet Drainwidth, Misc.
(6) 6-4-92. Revised End Strut, Bearing Plate, Misc.

Note: For details & Bar List of Precast Parapet Rail at End Span see dwg. no. 15230.

DETAILS OF STANDARD 31'-0" PRECAST CONCRETE SPANS 28'-0" & 24'-6" CLEAR ROADWAYS

ROUTE SEC.

ARKANSAS STATE HIGHWAY COMMISSION
LITTLE ROCK, ARK.

DRAWN BY: K.M.G. DATE OCT. 5, 84
CHECKED BY: F.H. DATE OCT. 8, 84
DESIGNED BY: F.H. DATE OCT. 84
SCALE: AS SHOWN

BRIDGE ENGINEER

BRIDGE NO. DRAWING NO. 15200

Service is an copy

DATE REVISED	DATE FILMED	DATE REVISED	DATE FILMED	FED. ROAD DIST. NO.	STATE	FED. AID PROJ. NO.	SHEET NO.	TOTAL SHEETS
12-11-87	7-13-12-11-87			6	ARK.			
6-4-92	6-4-92			JOB NO.				
2-20-97	2-20-97							

1 PRECAST RAIL DETAILS 15230

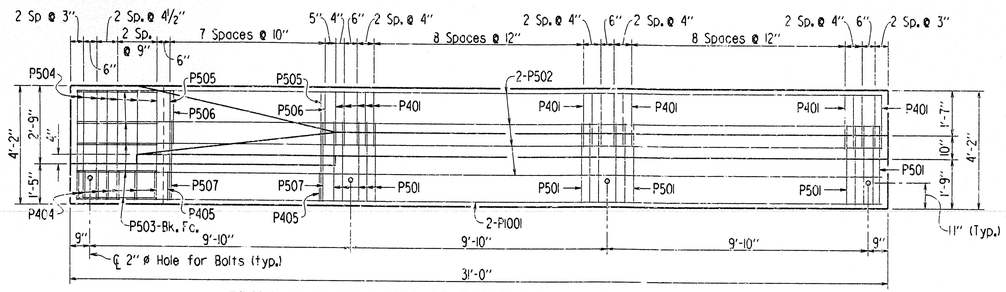

FRONT ELEVATION-PRECAST PARAPET RAIL FOR 31'-0" END SPAN

Scale ⅜" = 1'-0"

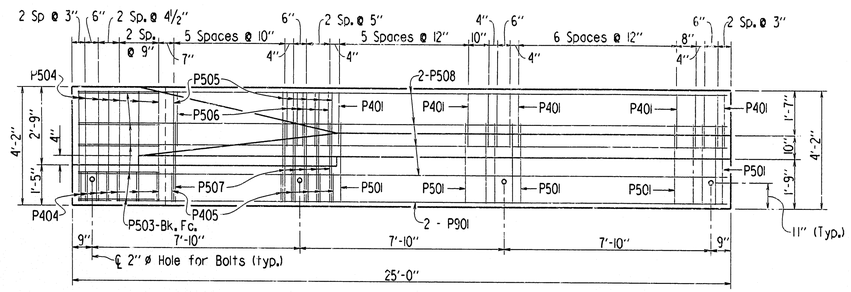

FRONT ELEVATION-PRECAST PARAPET RAIL FOR 25'-0" END SPAN

Scale ⅜" = 1'-0"

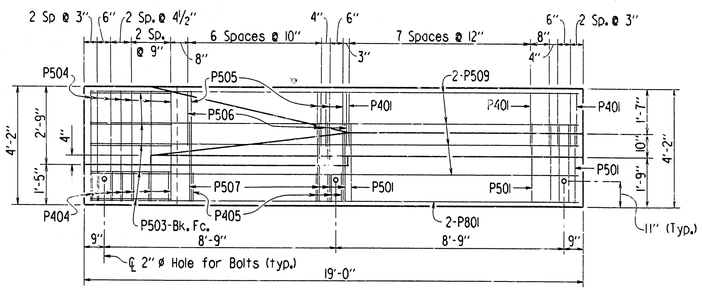

FRONT ELEVATION-PRECAST PARAPET RAIL FOR 19-0" END SPAN

Scale ⅜" = 1'-0"

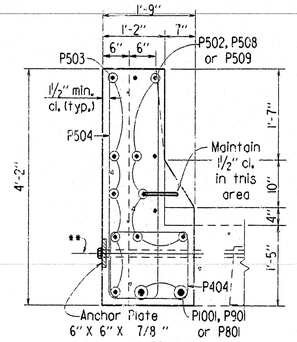

SECTION A-A

Scale ¾" = 1'-0"

** 1½" ø X 3'-0" Richmond S.C.A.B. or equal required at End Post Connections only.

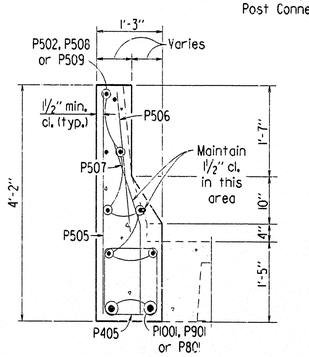

SECTION B-B

Scale ¾" = 1'-0"

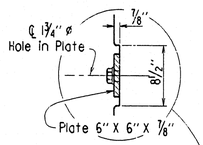

Note :
2" ø Hole for Bolt.
1½" ø X 2'-6" Richmond Screw Anchor & Bolt Assembly or equal is typical for all connections except as shown in SECTION A-A.

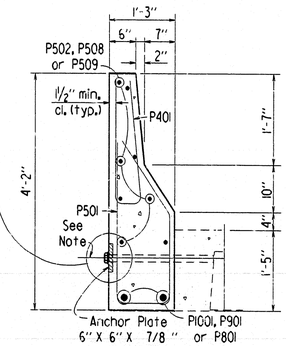

SECTION C-C

Scale ¾" = 1'-0"

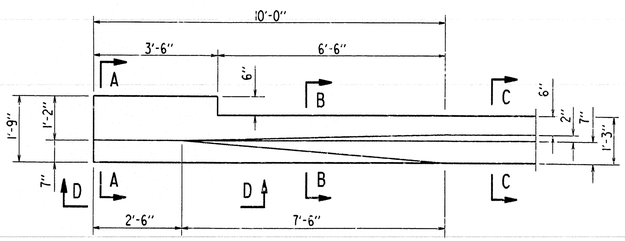

TYPICAL PLAN OF PRECAST PARAPET RAIL FOR END SPAN

Scale ½" = 1'-0"

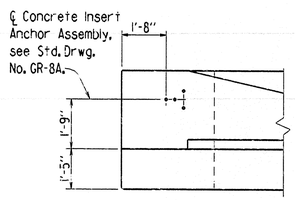

VIEW D-D

Scale ⅜" = 1'-0"

BAR LIST FOR PARAPET RAIL UNITS

MARK	NUMBER REQUIRED PER RAIL 19'-0" RAIL	25'-0" RAIL	31'-0" RAIL	LENGTH	PIN DIA.
P401	12	20	30	4'-8"	2"
P404	7	7	7	5'-8"	2"
P405	9	10	8	4'-8"	2"
P501	12	20	30	7'-3"	2½"
P502			8	30'-8"	Str.
P503	5	5	5	3'-3"	Str.
P504	7	7	7	8'-6"	2½"
P505	9	10	8	3'-11"	Str.
P506	9	10	8	2'-2"	Str.
P507	9	10	8	2'-10"	2½"
P508		8		24'-8"	Str.
P509	8			18'-8"	Str.
P80l	2			18'-8"	Str.
P90l		2		24'-8"	Str.
P100l			2	30'-8"	Str.

BENDING DIAGRAMS

Dimensions are out to out of bars.

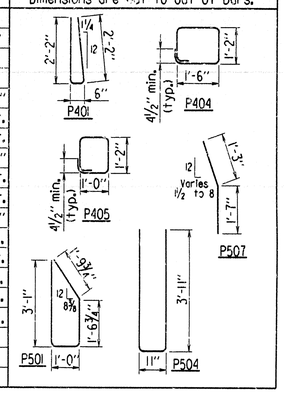

NOTES

This drawing is to be used with drawing no. 15240, 15241 and/or 15242 of which all three contain details and general notes pertaining to this drawing.

For details of "Concrete Insert Anchor Assembly", see Standard Drawing No. 2016D, 2017 or GR-8A.

"Concrete Insert Anchor Assembly" will not be paid for directly but will be considered subsidiary to the item "Precast Parapet Rail Units".

⚠ Revised for 1996 Specs, and redrawn 2-20-97 MJT
Chkd. By: RLW Date: 1/21/97

STATE OF ARKANSAS
REGISTERED PROFESSIONAL ENGINEER
No. 2168
1-29-97
DALE P. LOE

BRIDGE ENGINEER

DETAILS OF STANDARD PRECAST PARAPET RAILS FOR 19'-0", 25'-0", & 31'-0" PRECAST END SPANS

ROUTE SEC.

ARKANSAS STATE HIGHWAY COMMISSION

LITTLE ROCK, ARK.

DRAWN BY: MJT DATE: 01-10-97
CHECKED BY: RLW DATE: 1/21/97
DESIGNED BY: STD. DATE: –
SCALE: AS SHOWN

BRIDGE NO. DRAWING NO. 15230

BI5230.STD