DATE RECEIVED	DATE FILMED	DATE REVISED	DATE REVISED	FED. ROAD DIST. NO.	STATE	FED. AID PROJ. NO.	SHEET NO.	TOTAL SHEETS
3-22-78	3-28-78			6	ARK.			
				JOB NO.				

BENT STD.

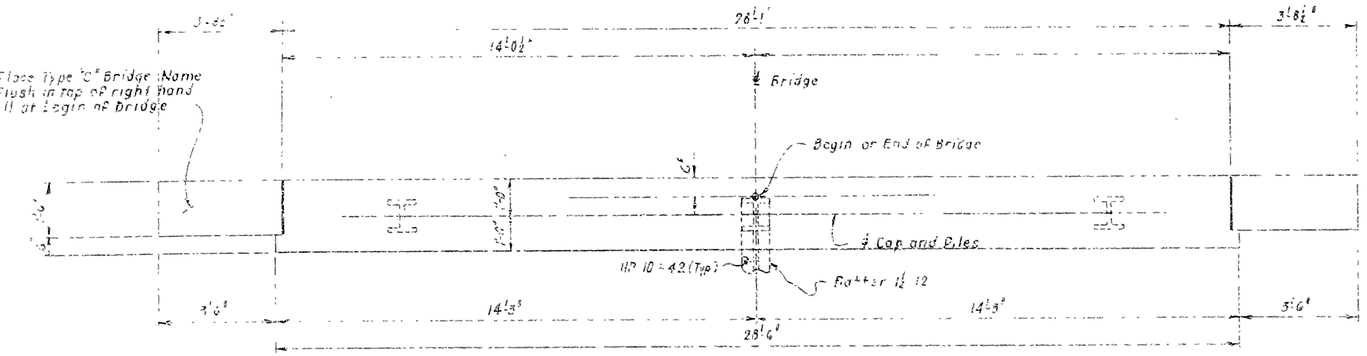

PLAN OF END BENT

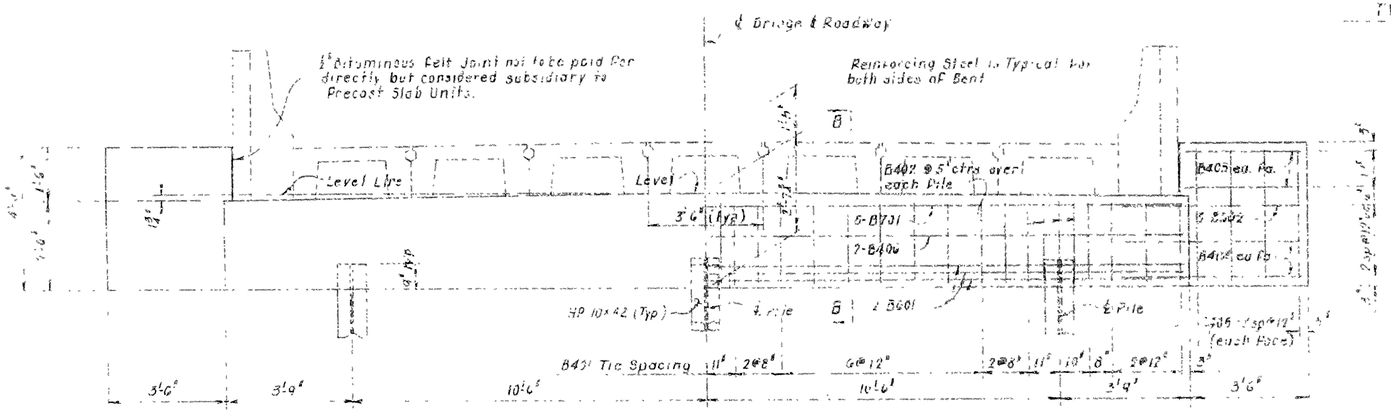

ELEVATION OF END BENT

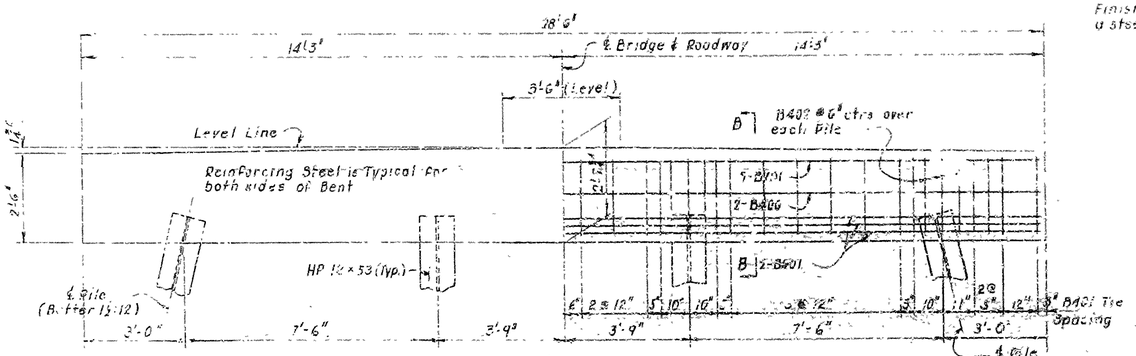

ELEVATION OF INT BENT

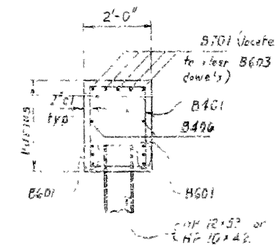

TYPICAL SECTION B-B

BAR LIST (EA BENT)

Mark	No. Req'd Ext	No. Req'd Int	Length	Pin Dia.
B401	50	52	8'-6"	2"
B402	9	12	5'-10"	2"
B403	8		3'-8"	Str
B404	2		5"	Str
B405	16			Str
B406	2		5'-7"	Str
B601	2	4	28'-2"	Str
B2	6		4'-9"	Str
B603	* 2	* 4	1'-11"	Str
B701	5	5	28'-2"	Str

Bending Diagrams (Dimens. are out to out of bars)

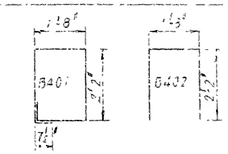

* At Fixed Bents Only

GENERAL NOTES:

DESIGN SPECIFICATIONS: AASHTO STANDARD SPECIFICATIONS FOR HIGHWAY BRIDGES, 1977 EDITION, AND INTERIM SPECIFICATIONS

LIVE LOAD: HS OR H20

METHOD OF DESIGN: LOAD FACTOR

PILING: HP 10×42 PILES IN END BENTS, HP 12×53 IN INT. BENTS.

CONCRETE: ALL CONCRETE SHALL BE CLASS "S" AND A MINIMUM 28 DAY COMPRESSIVE STRENGTH f'c = 3500 PSI. ALL EXPOSED CORNERS SHALL BE CHAMFERED 3/4 UNLESS OTHERWISE NOTED

REINFORCING STEEL: REINFORCING STEEL SHALL CONFORM TO ASTM A615 OR 1617, GRADE 60 (YIELD STRENGTH = 60,000 PSI).

FOR DETAILS OF 31' PRECAST SPANS, SEE DWG. 15310

THIS DRWG. TO BE USED WITH DRWG. 14995A.

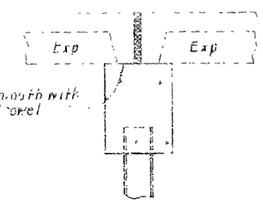

DETAIL AT EXP JOINT

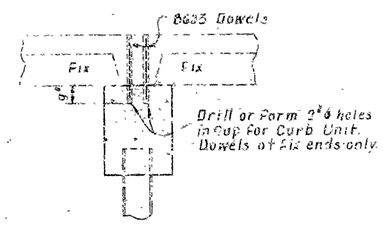

DETAIL AT FIXED JOINT

BENTS	REINFORCING	CONCRETE
INT.	* 819 LB	5.44 Cu.Yd.
END	3.2 LB	7.09 Cu.Yd.

* At Fixed Bents Only

DETAILS OF STD. PILE BENTS
HP 10×42 PILES IN END BENTS
HP 12×53 PILES IN INT. BENTS
FOR 31'-0" R.C. PRECAST SLAB SPANS
24'-6" CL. RDWY. PRECAST PARA. RAIL

ROUTE SEC.

ARKANSAS STATE HIGHWAY COMMISSION
LITTLE ROCK, ARK.

DRAWN BY: L.M. DATE: 3-6-77
CHECKED BY: [illegible] DATE: [illegible]
DESIGNED BY: DATE:
SCALE: 1/4"=1'-0"

BRIDGE ENGINEER

BRIDGE NO. DRAWING NO. 15313

3-28-78 Issue Date

FRICTION PLATE

DATE REVISED	DATE FILMED	DATE REVISED	DATE FILMED	FED. ROAD NO.	STATE	FED. AID PROJ. NO.	SHEET NO.	TOTAL SHEETS
				6	ARK.			
				JOB NO.		BR - 46 - 2	7	33

(1) 4499 - QUANTITIES - 26484

SCHEDULE OF BRIDGE QUANTITIES — BR - 46 - 2

BRIDGE NUMBER / CODE NUMBER / NAME PLATE TITLE	ITEM NUMBER	801	SP & 802	SP & 802	SP & 802	SP & 802	803	804	*SP & 805	*SP & 805	812	SP & 816	SP & 816	SP-820	205	SP & 603
	ITEM / UNIT OF STRUCTURE	UNCLASSIFIED EXCAVATION FOR STRUCTURES-BRIDGE	CLASS S CONCRETE	31'-0" PRECAST SLAB INTERIOR UNITS	31'-0" PRECAST SLAB CURB UNITS	31'-0" PRECAST PARAPET RAIL UNITS	BOILED LINSEED OIL	REINFORCING STEEL (GRADE 60)	STEEL BEARING PILING (HP 10 x 42)	TEST PILES (HP 10 x 42)	BRIDGE NAME PLATES (TYPE C)	DUMPED RIPRAP	FILTER BLANKET	PILE ENCASEMENT	REMOVAL OF EXISTING BRIDGE STRUCTURES	TEMPORARY BRIDGE STRUCTURES
	UNIT	CUBIC YARD	CUBIC YARD	EACH	EACH	EACH	GALLON	POUND	LIN. FOOT	LIN. FOOT	EACH	CUBIC YARD	SQ. YD.	LIN. FOOT	LUMP SUM	LUMP SUM
4499 / X020 / BEECH CREEK	END BENTS NO. 1 & 6	13.	15.18					2143	120		1	224	448			
	INT. BENTS NO. 2-5		21.72					3247	392	66				176		
	5-31'-0" PRECAST CONCRETE SPANS			25	10	10	10.6									
	TOTALS FOR JOB BR-46-2	13.	36.90	25	10	10	10.6	5390	512	66	1	224	448	176	1.00	1.0

* INCLUDES SP 807-5

JOHN SAGE
DESIGN SQUAD SUPERVISOR

Kirsal Pinkerton
BRIDGE ENGINEER

SCHEDULE OF BRIDGE QUANTITIES
BEECH CREEK BR. & APPRS.
MILLER COUNTY
CO. ROUTE 13 SEC.

ARKANSAS STATE HIGHWAY COMMISSION
LITTLE ROCK, ARK.

DRAWN BY: AJD DATE: 2-5-84
CHECKED BY: UAS DATE: 2-10-84 SCALE:
DESIGNED BY: — DATE: —

BRIDGE NO. 4499 DRAWING NO. 26484

A.F. 7600

DATE REVISED	DATE FILMED	DATE REVISED	DATE FILMED	FED. ROAD NO.	STATE	FED. AID PROJ. NO.	SHEET NO.	TOTAL SHEETS
				6	ARK.			
				JOB NO.		BR-46-2	11	33
				① 4499-LAYOUT-26485				

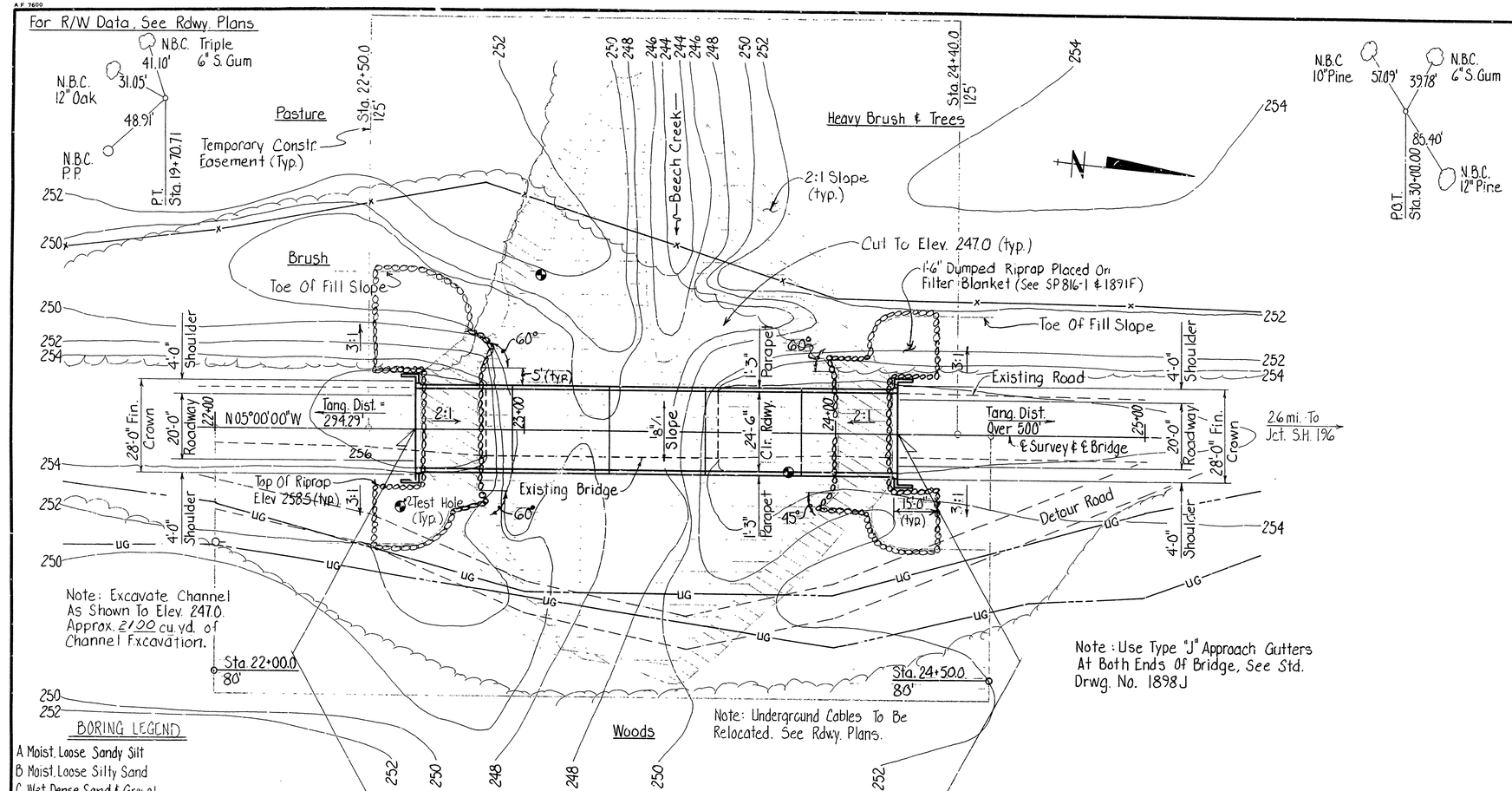

BORING LEGEND

A Moist, Loose Sandy Silt
B Moist, Loose Silty Sand
C Wet, Dense Sand & Gravel
D Moist, Very Dense Sand
E Alt. Layers of Moist, Hard Clay with Sand Lenses and Moist, Dense Sand
F Wet, Very Dense Sand
G Moist, Hard Silty, Sandy Clay
H Wet, Med. Dense to Dense Sand & Gravel
I Wet, Very Dense Sand & Gravel
J Alt. Layers of Moist, Very Stiff to Hard Clay with Sand Lenses & Moist, Dense Sand
K Wet, Dense Sand with Some Thin Lenses of Cemented Sand
L Moist, Loose Silty Sand (Fill Material)
M Moist Very Loose Clayey Sand with Some Organic Matter
N Wet, Loose Sand & Gravel
O Wet, Very Dense Sand with Some Organic Matter
P Wet, Very Dense Sand with Some Gravel

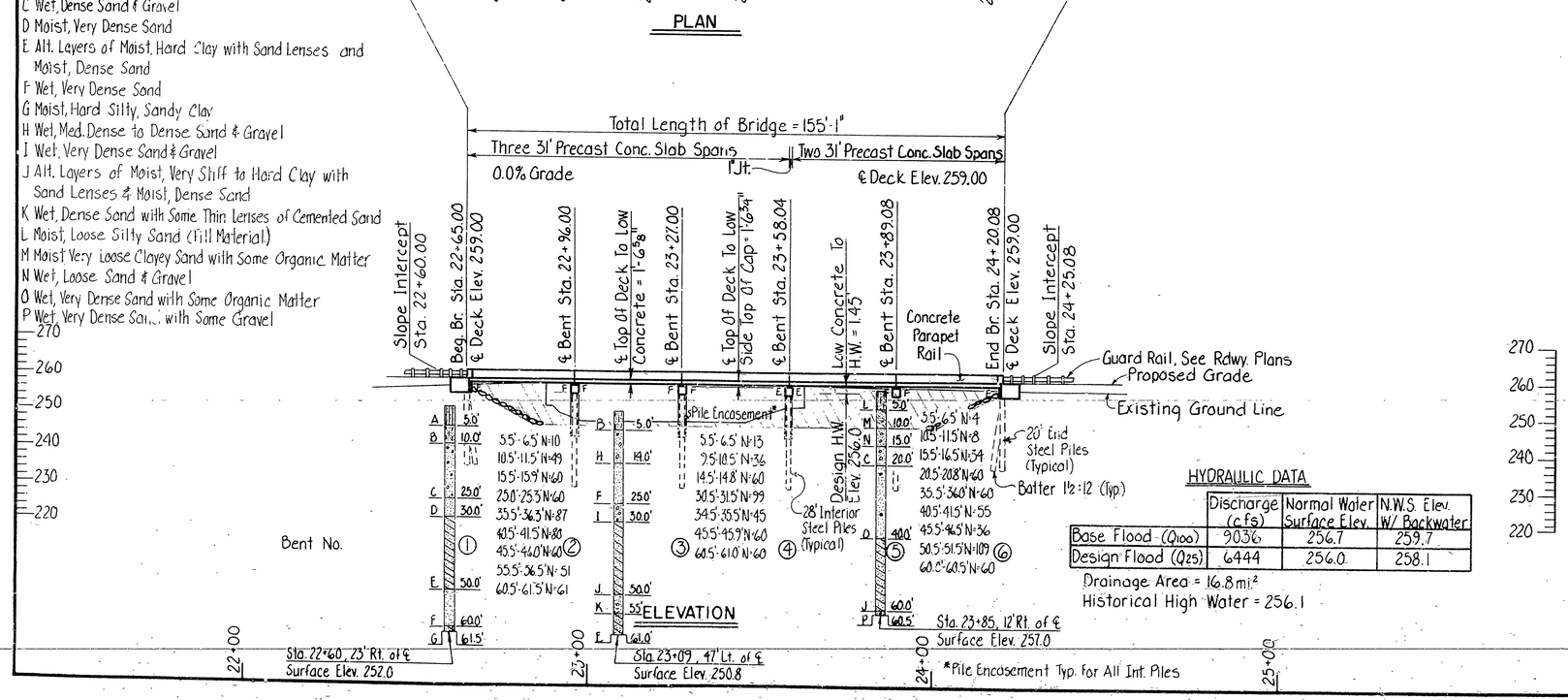

HYDRAULIC DATA

	Discharge (cfs)	Normal Water Surface Elev.	N.W.S. Elev. W/ Backwater
Base Flood (Q_{100})	9036	256.7	259.7
Design Flood (Q_{25})	6444	256.0	258.1

Drainage Area = 16.8 mi.²
Historical High Water = 256.1

GENERAL NOTES

BENCH MARK: NAIL IN SIDE OF POWER POLE 35' RT. STA. 21+86.0, ELEV. 252.31.

DESIGN SPECIFICATIONS: AASHTO STANDARD SPECIFICATIONS FOR HIGHWAY BRIDGES, 1977 EDITION WITH CURRENT INTERIMS.

CONSTRUCTION SPECIFICATIONS: ARKANSAS STATE HIGHWAY COMMISSION STANDARD SPECIFICATIONS FOR HIGHWAY CONSTRUCTION, EDITION OF 1978 AND APPLICABLE SPECIAL PROVISIONS.

DESIGN LIVE LOAD: H 20-44

DESIGN METHOD: LOAD FACTOR

CONCRETE: CONCRETE IN THE SUBSTRUCTURE SHALL BE CLASS "S"; CONCRETE IN THE SUPERSTRUCTURE SHALL BE CLASS S. ALL CONCRETE SHALL HAVE A MINIMUM 28 DAY COMPRESSIVE STRENGTH, f'_c =3500 PSI, AND SHALL BE POURED IN THE DRY. EXPOSED CORNERS TO BE CHAMFERED 3/4" UNLESS OTHERWISE NOTED.

REINFORCING STEEL: REINFORCING STEEL SHALL CONFORM TO ASTM A615 OR A617, GRADE 60 (fy = 60,000 PSI) OR AS SPECIFIED ON THE DETAIL DRAWINGS.

PILING: PILING IN BENTS 1 AND 6 SHALL BE HP10X42 AND SHALL BE DRIVEN TO A MINIMUM BEARING CAPACITY OF 44 TONS PER PILE. PILING IN BENTS 2 THRU 5 SHALL BE HP10X42 AND SHALL BE DRIVEN TO A MINIMUM BEARING CAPACITY OF 44 TONS PER PILE. PILING IN ALL BENTS SHALL HAVE A MINIMUM PENETRATION OF 15 FT. BELOW THE GROUND LINE. ALL PILING SHALL BE DRIVEN WITH AN APPROVED AIR, STEAM, OR DIESEL HAMMER.

PILES IN END BENTS SHALL BE DRIVEN AFTER EMBANKMENT TO BOTTOM OF CAP IS IN PLACE. LENGTHS OF PILING SHOWN ARE ASSUMED FOR ESTIMATING QUANTITIES FOR BID COMPARISON PURPOSES ONLY. ACTUAL LENGTHS TO BE DETERMINED IN THE FIELD.

DRIVE ONE 33 FT. TEST PILE IN BENTS 2 & 5.

FOR DETAILS OF END BENTS, SEE DWG. NO. 15316
FOR DETAILS OF INT. BENTS, SEE DWG. NO. 15316
FOR DETAILS OF SPANS, SEE DWG. NO. 15180
FOR DETAILS OF PILING, SEE DWG. NO. 14995A
FOR DETAILS OF APPROACH GUTTERS, SEE DWG. NO. 1898J

THE EXISTING BRIDGE SHALL BE REMOVED BY THE CONTRACTOR, BUT SHALL REMAIN THE PROPERTY OF THE COUNTY.

FOR DETAILS OF DETOUR, SEE ROADWAY PLANS.

DETOUR BRIDGE: THE CONTRACTOR SHALL CONSTRUCT A 45' DETOUR BRIDGE APPROXIMATELY 40' DOWNSTREAM. THE BRIDGE SHALL HAVE A MINIMUM DECK ELEVATION OF 256.0, A MINIMUM ROADWAY WIDTH OF 20' AND BE DESIGNED FOR H15 LIVE LOADING. SEE SECTION 603 OF THE STANDARD SPECIFICATIONS AND SP 603-3. THE CONTRACTOR MAY WISH TO USE 15' UNITS FROM THE EXISTING BRIDGE IN THE DETOUR BRIDGE. THE ROAD COULD BE CLOSED TO TRAFFIC UNTIL THE 15' UNITS ARE IN PLACE AND THE DETOUR BRIDGE IS OPENED TO TRAFFIC. WHEN THE NEW BRIDGE IS COMPLETED AND OPENED TO TRAFFIC ANY UNITS IN THE DETOUR BRIDGE FROM THE EXISTING BRIDGE SHALL REMAIN THE PROPERTY OF THE COUNTY.

LAYOUT OF
BRIDGE OVER BEECH CREEK
BEECH CREEK BR. & APPRS.
MILLER COUNTY
CO. ROUTE 13 SEC.

ARKANSAS STATE HIGHWAY COMMISSION
LITTLE ROCK, ARK.

DRAWN BY: DHM DATE: 17 JAN 84
CHECKED BY: AJD DATE: 2-10-84 SCALE: 1" = 20'-0"
DESIGNED BY: DHM DATE: JAN 84

Neal Pinkerton
BRIDGE ENGINEER

BRIDGE NO. 4499 DRAWING NO. 26485