DATE REVISED	DATE FILMED	DATE REVISED	DATE FILMED	FED. ROAD DIST. NO.	STATE	FED. AID PROJ. NO.	SHEET NO.	TOTAL SHEETS
				6	ARK			
				JOB NO.		R30095	165	541
				06786		LAYOUT	40288	

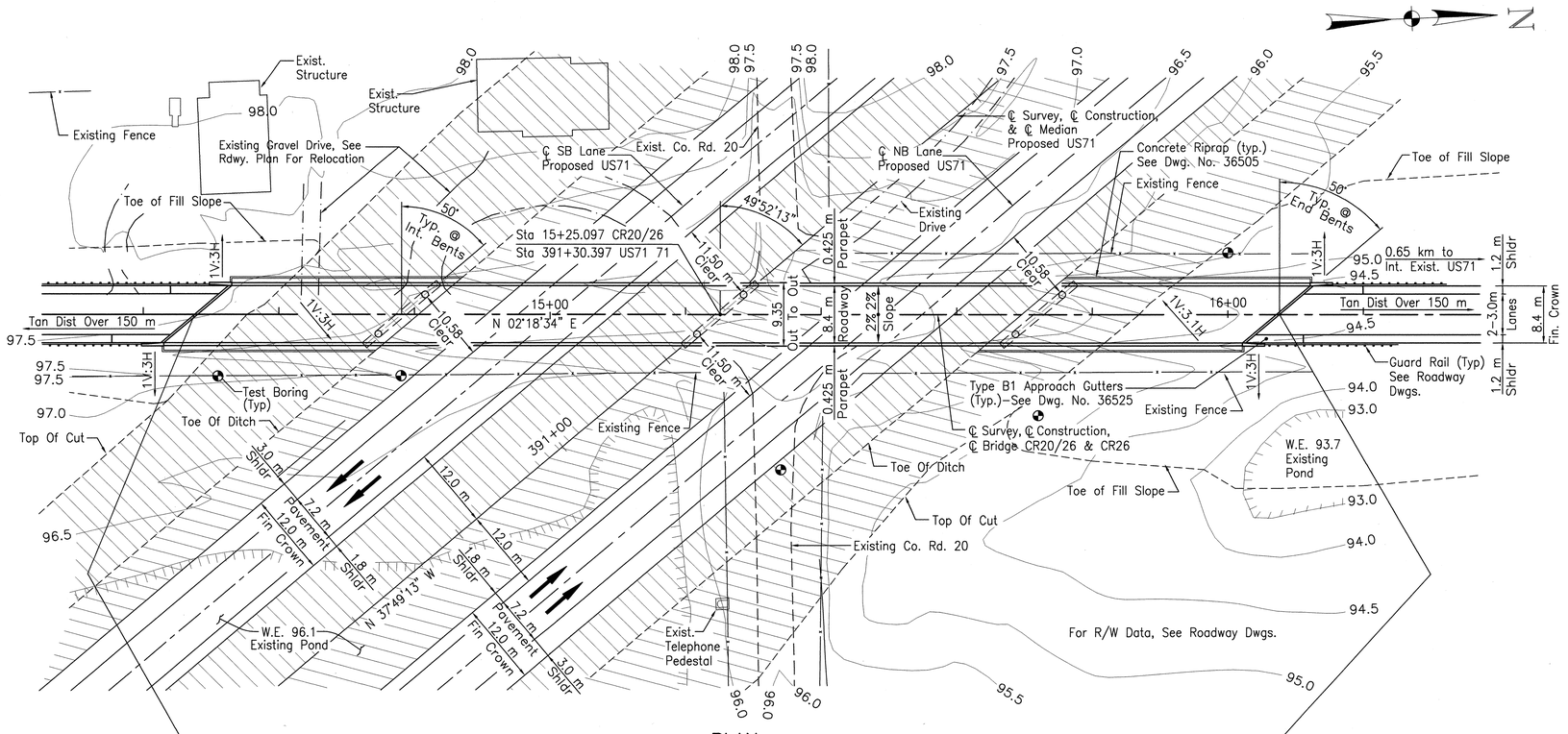

PLAN

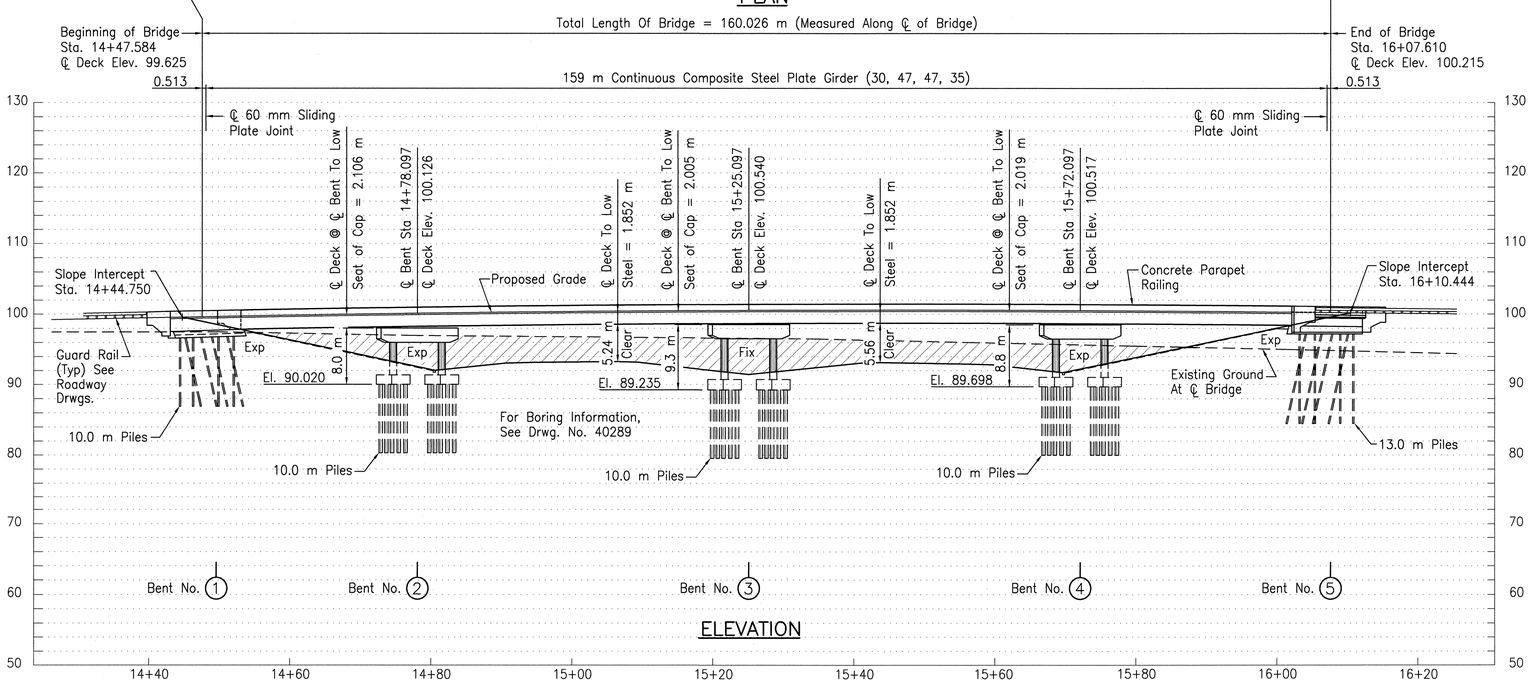

ELEVATION

GENERAL NOTES:

All dimensions are in meters unless otherwise noted.

BENCHMARK: 80 "D" nail in south side of railroad tie fence corner post. 104.0 m left of station 387+13. Elevation 97.783.

CONSTRUCTION SPECIFICATIONS: Arkansas State Highway and Transportation Department Standard Specifications for Highway Construction (1996 edition) with applicable supplemental specifications and special provisions.

DESIGN SPECIFICATIONS: AASHTO Standard Specifications for Highway Bridges (1996 edition) with current interim specifications.

LIVE LOADING: MS 18

METHOD OF DESIGN: Load Factor

SEISMIC PERFORMANCE CATEGORY: A

MATERIALS AND STRENGTHS:

Class S(AE) Concrete (superstructure)	f'c = 28.0 MPa
Class S Concrete (substructure)	f'c = 24.0 MPa
Reinforcing Steel (ASTM A615/A615M-96a)	fy = 420 MPa
Structural Steel (AASHTO M270, Gr. 345W)	Fy = 345 MPa
Structural Steel (AASHTO M270, Gr. 250)	Fy = 250 Mpa

BORING LOGS: Boring logs may be obtained from the Programs and Contracts Division.

CONCRETE PILING: Piling for Bents 1 through 5 shall be 405 mm octagonal or 355 mm square precast concrete and shall be driven to a minimum safe bearing capacity of 390 kN per pile. Piling shapes shall not be mixed. All piling shall be driven with an approved air, steam, or diesel hammer capable of developing a total energy of at least 20 300 joules. Piling in end bents shall be driven after embankment to bottom of cap is in place. Piling at end bents shall have a minimum penetration of 6.0 m below natural ground. Piling at interior bents shall have a minimum penetration of 3.0 m below bottom of footing. Lengths of piling shown are assumed for estimating quantities only. Actual lengths to be determined in the field. Drive one 12.0 m test pile in Bent 2, one 12.0 m test pile in Bent 3 and one 15.0 m test pile in Bent 5.

TEST PILES AT INTERMEDIATE BENTS: Preboring to a depth of 2.0 m below the bottom of the footing will be required before driving the first test pile. Based upon the driving results of the first test pile, the Engineer will adjust the amount of preboring needed to drive the second test pile.

PREBORING: Preboring may be required to obtain minimum penetration requirements. The Engineer will determine the required length of preboring after test piles are driven. Preboring will not be paid for directly but will be considered subsidiary to the item "Concrete Piling (Section 805)".

BRIDGE DECK: The concrete bridge deck shall be given a tine finish as specified for final finishing in Subsection 802.19 for Class 5 Tined Bridge Roadway Surface Finish.

DETAIL DRAWINGS:	DRAWING NO.
End Bents	40290–40293
Intermediate Bents	40294–40296
Plate Girder Spans	40297–40303
Elastomeric Bearing Pads	40248
Embankment Construction and Backfill at Bridge Ends	36500
Standard Type C Bridge Name Plates	36502
Concrete Riprap	36505
Standard Concrete Piles	36506
Permissible Type Permanent Steel Bridge Deck Forms	36515
Standard Type B1 Approach Gutters	36525

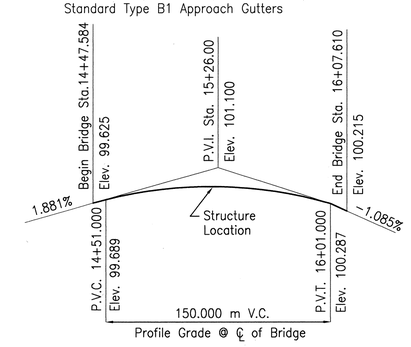

PROFILE GRADE

SHEET 1 OF 2
LAYOUT OF CR20/26 BRIDGE OVER US71
FOUKE–NORTH (Gr. & Strs.) (F)
MILLER COUNTY
US71
ARKANSAS STATE HIGHWAY COMMISSION

STATE OF ARKANSAS REGISTERED PROFESSIONAL ENGINEER No. 10204 MARC T. BARRY 08-02-00

BRIDGE ENGINEER

LITTLE ROCK, ARKANSAS

DRAWN BY: JFS DATE: 08-02-00
CHECKED BY: MTB/WMG DATE: 08-02-00
DESIGNED BY: MTB DATE: 08-02-00
BRIDGE NO. 06786

SCALE: 1:400 METRIC

DRAWING NO. 40288

METRIC D

MICROFILMED
AUG 25 2000

DATE REVISED	DATE FILMED	DATE REVISED	DATE FILMED	FED. ROAD DIST. NO.	STATE	FED. AID PROJ. NO.	SHEET NO.	TOTAL SHEETS
				6	ARK			
				JOB NO.		R30095	166	541
				(1) 06786		BORINGS	40289	

BORING BLOW COUNTS (N)

Sta 14+51

0.8–1.1 m N=11
2.0–2.3 m N=18
7.3–7.6 m N=28
8.9–9.2 m N=35
10.4–10.7 m N=50 (180 mm)
11.9–12.2 m N=48
13.4–13.7 m N=40
14.8–15.0 m N=50 (150 mm)
16.4–16.7 m N=37
18.0–18.3 m N=50 (150 mm)

Sta 14+78

7.3–7.6 m N=33
8.8–9.1 m N=39
10.2–10.5 m N=50 (180 mm)
11.9–12.2 m N=47
13.4–13.7 m N=43
14.8–15.1 m N=50 (150 mm)
16.4–16.7 m N=49
17.8–18.1 m N=50 (150 mm)
19.5–19.8 m N=40
21.0–21.3 m N=37

Sta 15+34

0.8–1.1 m N=13
1.4–1.7 m N=14
2.0–2.3 m N=19
2.8–3.1 m N=24
4.0–4.3 m N=23
5.8–6.1 m N=12
7.3–7.6 m N=15
8.8–9.1 m N=21
10.4–10.7 m N=25
11.9–12.2 m N=36
13.4–13.7 m N=36
15.0–15.3 m N=40
16.5–16.8 m N=46
18.0–18.3 m N=57
19.5–19.8 m N=80 (205 mm)

Sta 15+72

0.8–1.1 m N=5
2.9–3.2 m N=60
4.3–4.6 m N=52
5.8–6.1 m N=21
7.3–7.6 m N=27
8.8–9.1 m N=28
10.4–10.7 m N=42
11.9–12.2 m N=37
13.4–13.7 m N=45
14.8–15.1 m N=50 (150 mm)
16.3–16.6 m N=50 (150 mm)
18.0–18.3 m N=41
19.5–19.8 m N=39

Sta 16+00

0.8–1.1 m N=5
1.4–1.7 m N=8
2.8–3.1 m N=50 (200 mm)
4.3–4.6 m N=35
5.5–5.8 m N=35
7.3–7.6 m N=17
8.8–9.1 m N=42
10.4–10.7 m N=46
11.9–12.2 m N=59
13.3–13.6 m N=50 (200 mm)
14.6–14.9 m N=50 (100 mm)
16.3–16.6 m N=50 (150 mm)
18.0–18.3 m N=39

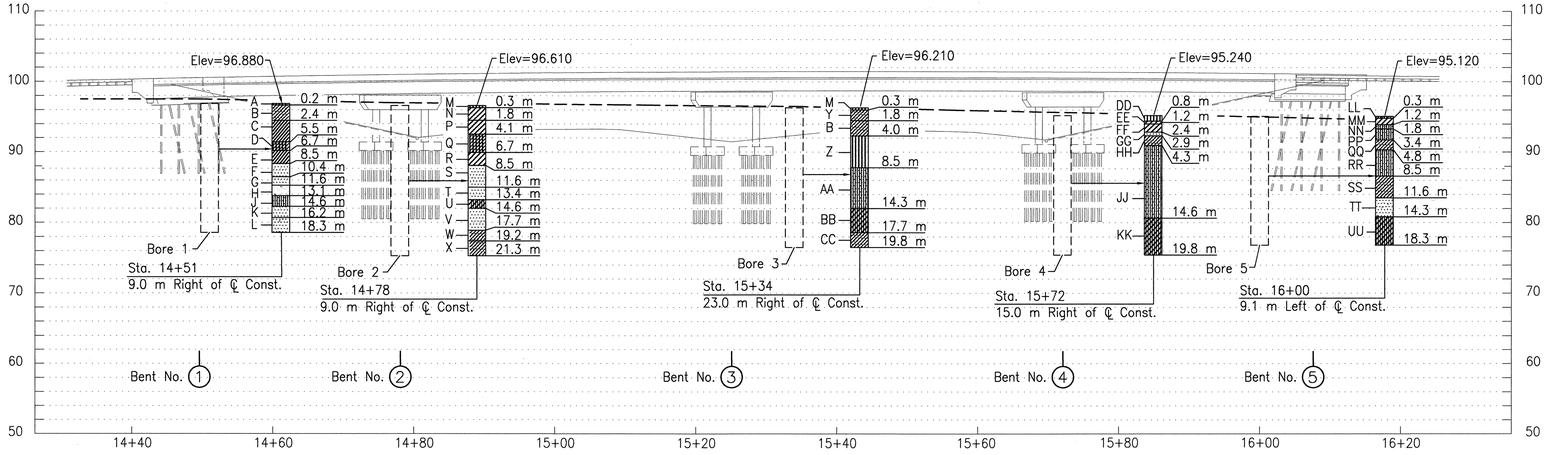

BORING LOCATION ELEVATION

BORING LEGEND

A – Loose brown fine sandy silt
B – Medium dense tan, gray & red clayey fine sand
C – Stiff to very stiff gray & red clay
D – Stiff reddish yellow clayey silt w/ fine sand
E – Very stiff gray & red clay
F – Dense tan fine to medium sand w/ trace coarse sand
G – Very dense tan & light gray fine sand
H – Dense tan fine to coarse sand w/ fine gravel & occasional clay seams
J – Dense reddish yellow silty fine sand w/ occasional clay seams
K – Very dense tan fine sand
L – Dense to very dense brownish yellow fine to coarse sand w/ fine gravel & clayey sand seams.
M – Loose brown fine sandy silt w/ rootlets
N – Firm to stiff reddish yellow & brown fine sandy clay w/ organics & ferrous stains–brownish yellow w/ gray below 1.2 m
P – Very stiff red & gray clay w/ fine sand
Q – Stiff to very stiff reddish yellow clayey silt w/ trace fine sand
R – Very stiff gray & red clay w/ occasional fine sand pockets
S – Dense to very dense tan fine to medium sand
T – Dense light gray fine to coarse sand w/ trace clay & some fine gravel
U – Very stiff redish yellow silty clay w/ fine sand seams & layer
V – Very dense to dense brownish yellow fine sand w/ some fine to coarse gravel w/ clay pockets below 16.46 m
W – Very dense brownish yellow clayey fine sand w/ fine to medium sand seams & ferrous inclusions & stains
X – Dense dark grayish brown clayey fine sand
Y – Medium dense reddish yellow & tan clayey fine sand–tan, light brown & reddish yellow below 1.2 m
Z – Medium dense reddish yellow fine sandy silt to silty fine sand w/ reddish yellow silty clay seams & layers below 5.5 m
AA – Medium dense to dense reddish yellow silty fine to medium sand w/ sandy clay seams, decreasing clay below 11.6 m, dense w/ fine to coarse gravel below 12.19 m
BB – Very stiff grayish brown silty clay w/ numerous fine sand partings
CC – Very dense dark grayish brown clayey fine sand–fine to coarse gravel seam at 19.5 m
DD – Very loose brown fine sandy silt w/ rootlets–tan below 0.3 m
EE – Firm reddish yellow fine sandy clay
FF – Stiff tan, red & gray fine sandy clay
GG – Very stiff gray & red clay w/ fine sand pockets
HH – Dense yellowish red clayey fine sand w/ interbedded red & gray silty clay laminations & seams–decreasing clay below 3.05 m
JJ – Medium dense reddish yellow silty fine sand w/ silty clay seams–dense below 10.2 m–organic stains at 11.9 m
KK – Very stiff grayish brown silty clay w/ numerous fine sand partings & seams–w/ silty fine sand seams & layers below 16.2 m
LL – Very loose brown silty fine sand w/ organic matter
MM – Very soft reddish tan fine sandy clay w/ rootlets
NN – Loose gray w/ some reddish brown silty fine sand w/ clay partings.
PP – Medium dense to very dense brown silty fine sand w/ ferrous staining & nodules–slightly clayey below 2.59 m
QQ – Dense reddish brown w/ some gray clayey fine sand
RR – Dense to medium dense reddish brown & tan silty fine sand–more silty below 7.62 m
SS – Dense reddish brown clayey medium to fine sand
TT – Dense to very dense tan medium to fine sand w/ fine gravel
UU – Very stiff dark brown silty clay lignitic w/ fine sand partings

MICROFILMED
AUG 25 2000

STATE OF ARKANSAS
Marc Barry
REGISTERED PROFESSIONAL ENGINEER
No. 10204
08-02-00
MARC T. BARRY

BRIDGE ENGINEER

SHEET 2 OF 2
LAYOUT OF CR20/26 BRIDGE OVER US71
FOUKE–NORTH (Gr. & Strs.) (F)
MILLER COUNTY
US71
ARKANSAS STATE HIGHWAY COMMISSION
LITTLE ROCK, ARKANSAS

DRAWN BY: JFS DATE: 08-02-00
CHECKED BY: MTB/WMG DATE: 08-02-00
DESIGNED BY: MTB DATE: 08-02-00
BRIDGE NO. 06786
DRAWING NO. 40289
SCALE: 1:400 METRIC

DATE REVISED	DATE FILMED	DATE REVISED	DATE FILMED	FED. ROAD DIST. NO.	STATE	FED. AID PROJ. NO.	SHEET NO.	TOTAL SHEETS
				6	ARK			
				JOB NO.		R30095	167	541
				(1) 06786		END BENTS	40290	

Note: All dimensions are in millimeters (mm) unless noted otherwise.
For General Notes, see Dwg. No. 40249

Note:
Class 1 Protective Surface Treatment shall be applied to the Roadway face and top of Transition Rail, and to the top of the Backwall.

* Finish top of the Backwall to match the bridge deck – See "ROUNDING DETAIL" on Drwg. No. 40297

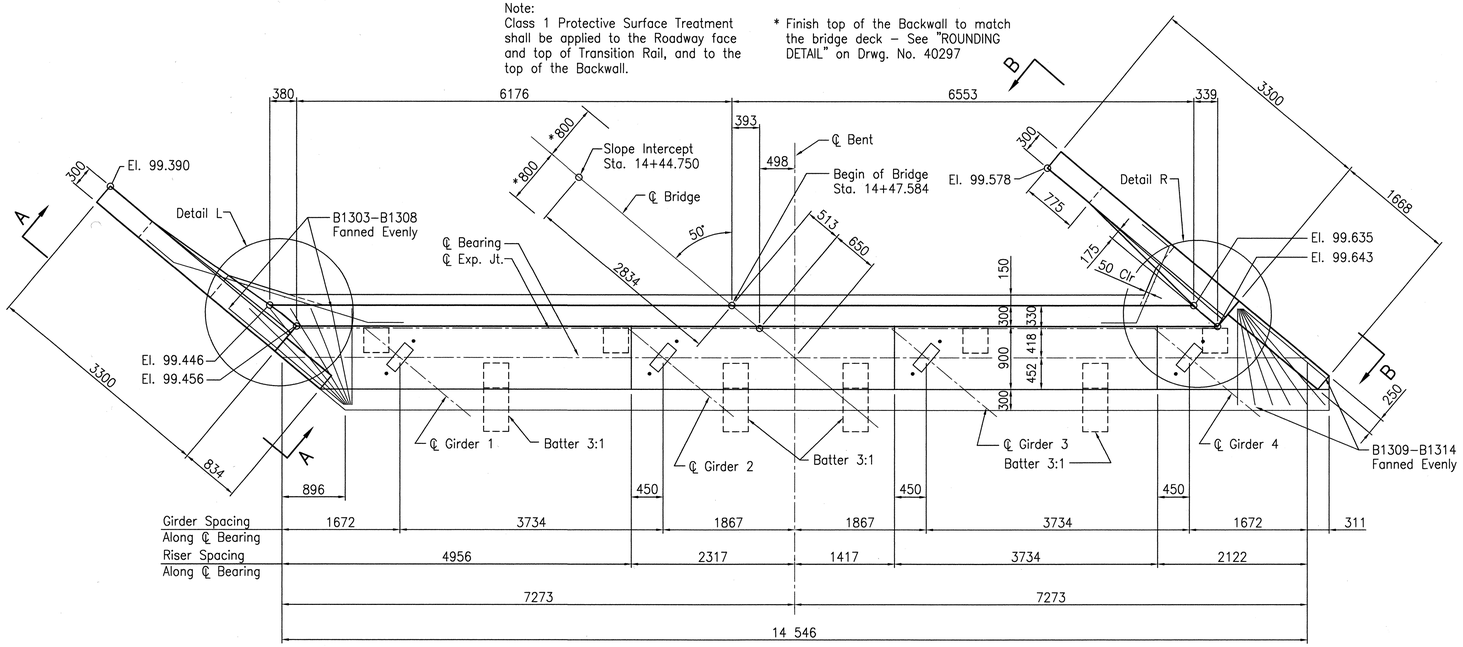

PLAN VIEW
1:40

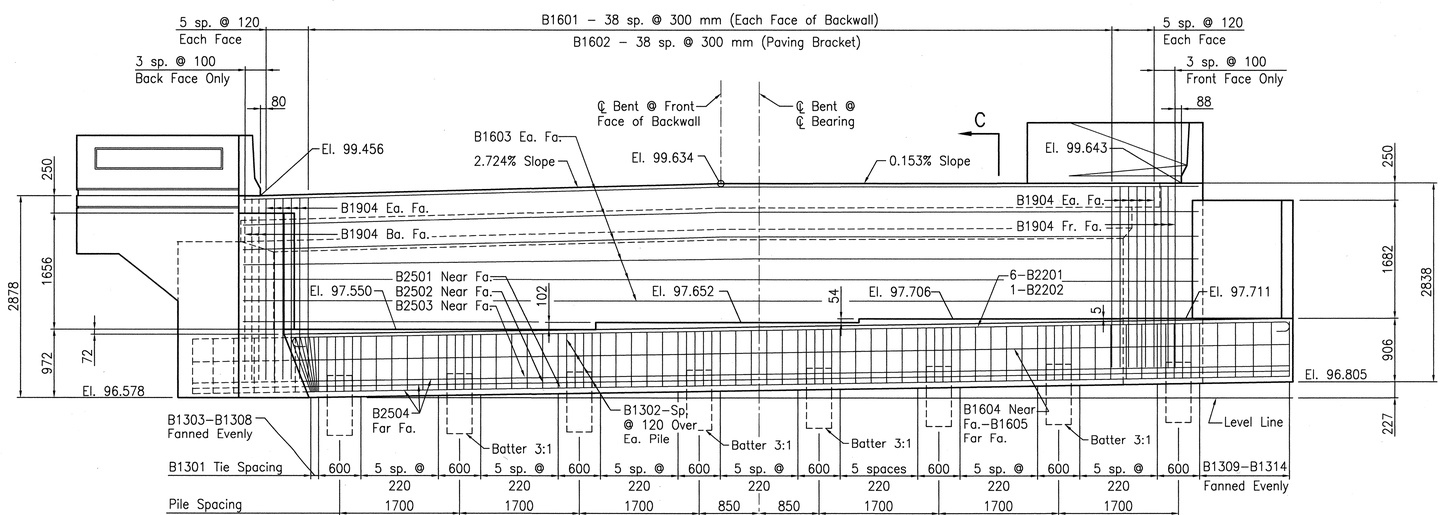

BENT 1 ELEVATION
1:40 (Looking Back)

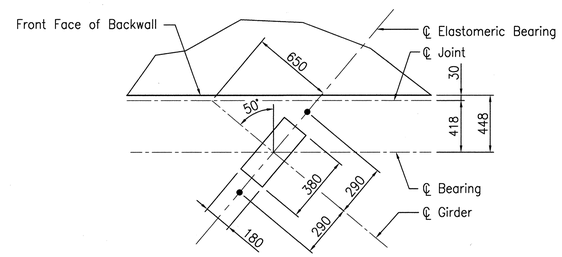

ANCHOR BOLT LAYOUT
N.T.S.

STATE OF ARKANSAS
REGISTERED PROFESSIONAL ENGINEER
No. 10204
08-02-00
MARC T. BARRY

BRIDGE ENGINEER

SHEET 1 OF 4
DETAILS OF END BENTS
CR20/26 OVER US71
MILLER COUNTY
US71
ARKANSAS STATE HIGHWAY COMMISSION
LITTLE ROCK, ARKANSAS

DRAWN BY: JFS/MTB DATE: 08-02-00
CHECKED BY: MTB/WMG DATE: 08-02-00
DESIGNED BY: MTB DATE: 08-02-00
BRIDGE NO. 06786 DRAWING NO. 40290
SCALE: 1:40 METRIC

MICROFILMED
AUG 28 2000

DATE REVISED	DATE FILMED	DATE REVISED	DATE FILMED	FED. ROAD DIST. NO.	STATE	FED. AID PROJ. NO.	SHEET NO.	TOTAL SHEETS
				6	ARK			
				JOB NO.		R30095	168	541
				(1) 06786		END BENTS	40291	

Note: All dimensions are in millimeters (mm) unless noted otherwise.
For General Notes, see Dwg. No. 40249

Note:
Class 1 Protective Surface Treatment shall be applied to the Roadway face and top of Transition Rail, and to the top of the Backwall.

* Finish top of the Backwall to match the bridge deck – See "ROUNDING DETAIL" on Drwg. No. 40297

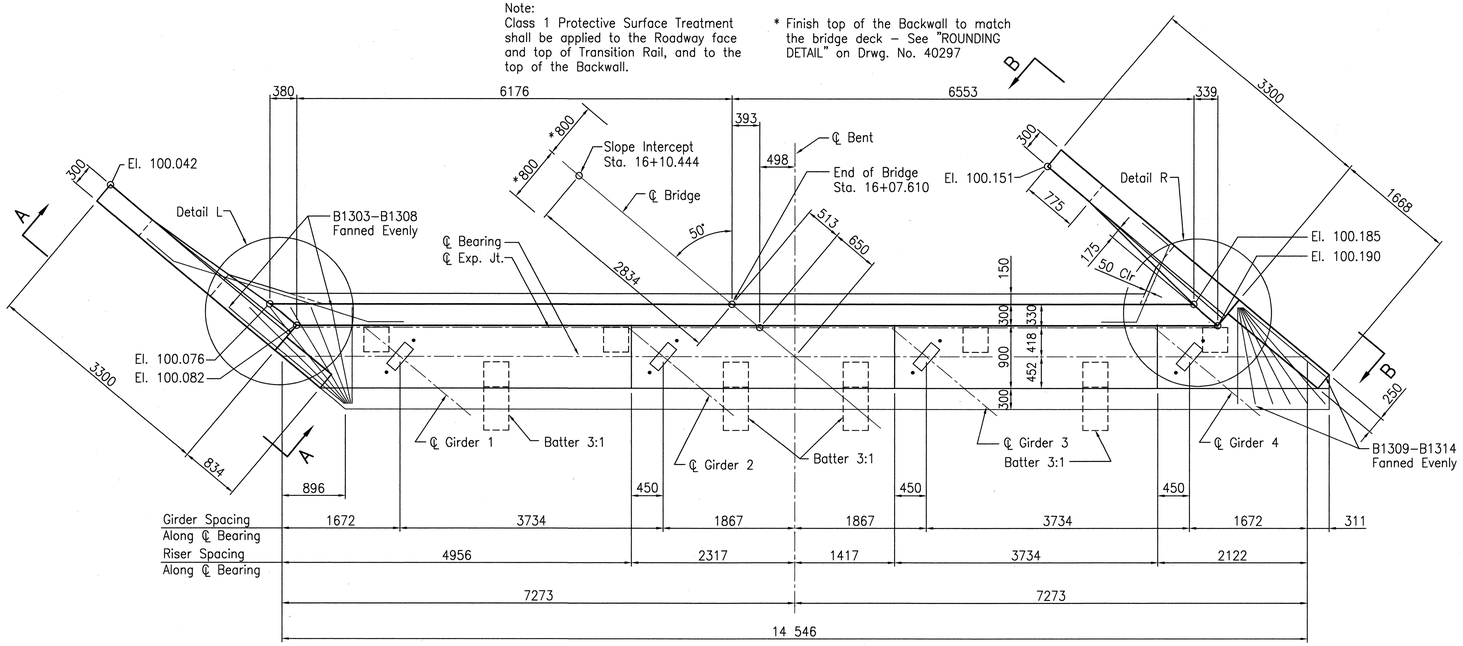

PLAN VIEW
1:40

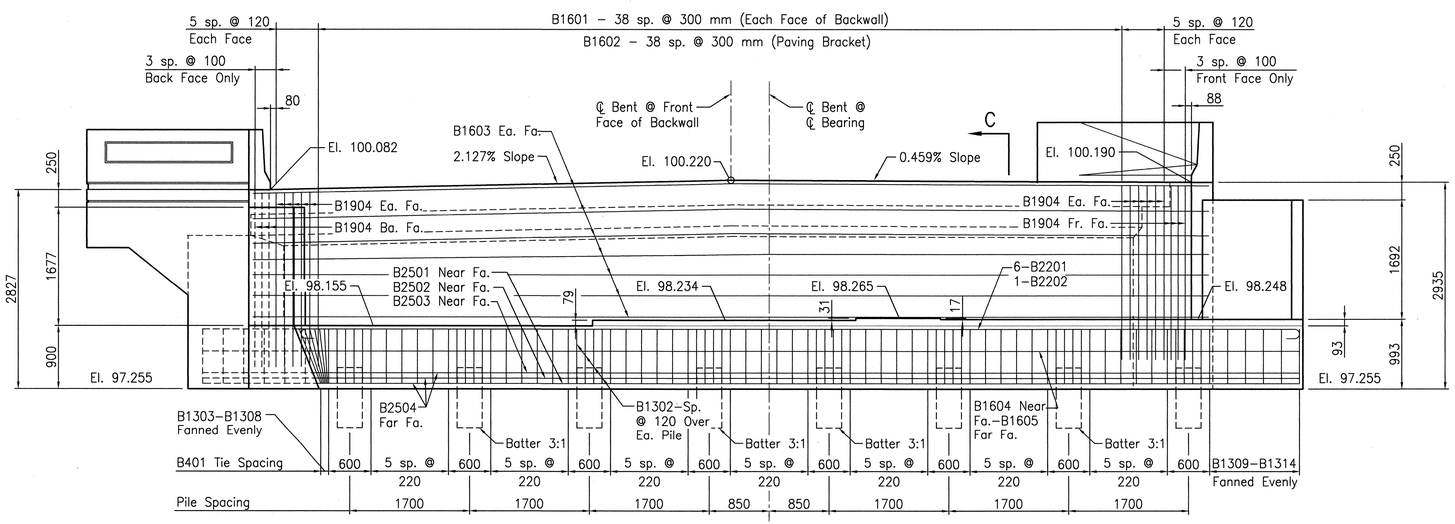

BENT 5 ELEVATION
1:30 (Looking Ahead)

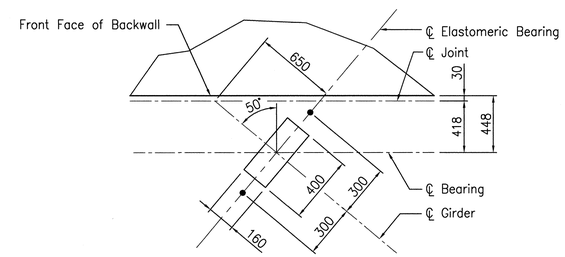

ANCHOR BOLT LAYOUT
N.T.S.

MICROFILMED
AUG 28 2000

STATE OF ARKANSAS
REGISTERED PROFESSIONAL ENGINEER
No. 10204
08-02-00
MARC T. BARRY

BRIDGE ENGINEER

SHEET 2 OF 4
DETAILS OF END BENTS
CR20/26 OVER US71
MILLER COUNTY
US71
ARKANSAS STATE HIGHWAY COMMISSION
LITTLE ROCK, ARKANSAS

DRAWN BY: JFS/MTB DATE: 08-02-00
CHECKED BY: MTB/WMG DATE: 08-02-00
DESIGNED BY: MTB DATE: 08-02-00
BRIDGE NO. 06786
DRAWING NO. 40291
SCALE: 1:40 METRIC

DATE REVISED	DATE FILMED	DATE REVISED	DATE FILMED

FED. ROAD DIST. NO.	STATE	FED. AID PROJ. NO.	SHEET NO.	TOTAL SHEETS
6	ARK			
JOB NO.		R30095	169	541
(1) 06786		END BENTS	40292	

Note: All dimensions are in millimeters (mm) unless noted otherwise.
For General Notes, see Dwg. No. 40249

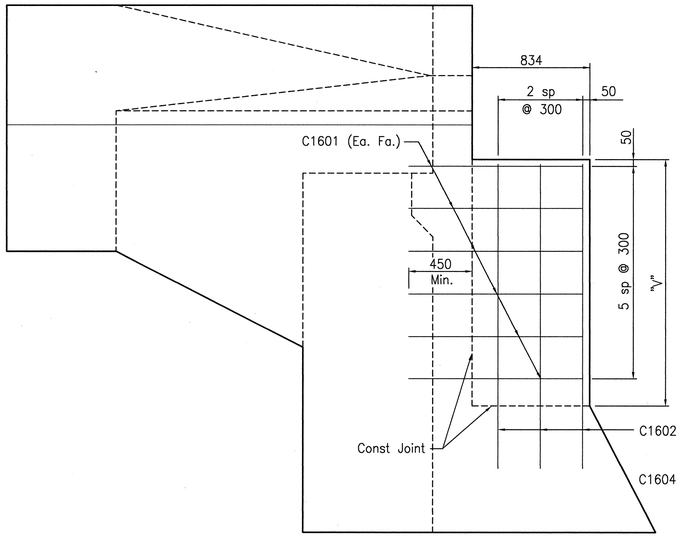

VIEW A–A
1:30

For Details of Wing & Transition Rail, See Dwg. No. 40293

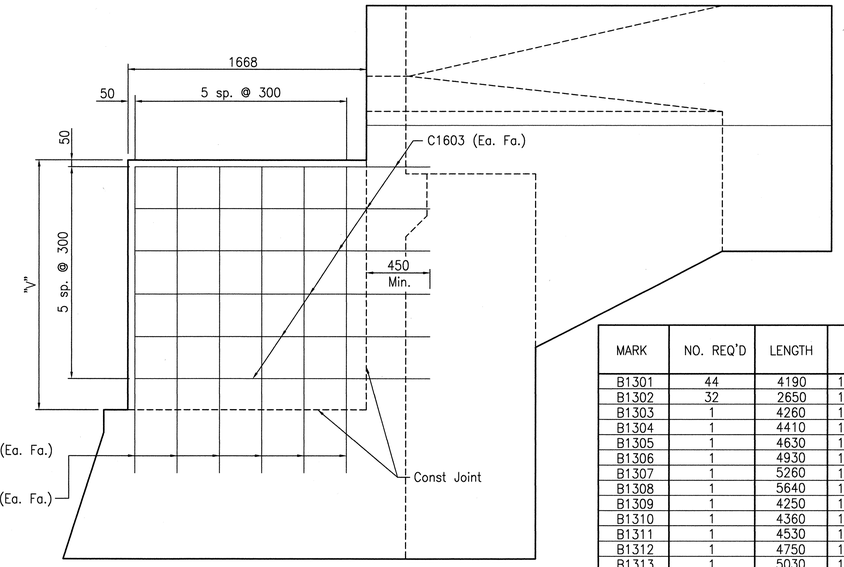

VIEW B–B
1:30

	Screen Wall Variables	V
Bent 1	Left Wing	1682
	Right Wing	1656
Bent 5	Left Wing	1677
	Right Wing	1692

Note: Wing Designations Are Looking Ahead

BAR LIST PER END BENT

MARK	NO. REQ'D	LENGTH	A	B	C	PIN DIA.
B1301	44	4190	1100	1360	820	50
B1302	32	2650	1100			50
B1303	1	4260	1130	1395	820	50
B1304	1	4410	1195	1475	825	50
B1305	1	4630	1290	1595	830	50
B1306	1	4930	1420	1750	845	50
B1307	1	5260	1565	1930	855	50
B1308	1	5640	1725	2130	875	50
B1309	1	4250	1125	1390	820	50
B1310	1	4360	1175	1450	825	50
B1311	1	4530	1250	1540	830	50
B1312	1	4750	1345	1660	835	50
B1313	1	5030	1465	1805	845	50
B1314	1	4740	1525	1525	775	50
B1315	6	2380				Str
B1601	78	2570				Str
B1602	39	1200				63
B1603	15	13 760				Str
B1604	1	14 100				Str
B1605	1	14 390				Str
B1901	3	3890	500	2890	500	114
B1902	1	3510	120	2890	500	114
B1903	4	2130	500	1180	500	114
B1904	26	2570				Str
B2201	6	14 880	14 390	180		133
B2202	1	14 740	14 250	180		133
B2501	1	13 920				Str
B2502	1	13 950				Str
B2503	1	13 980				Str
B2504	3	14 390				Str
C1601	12	1240				Str
C1602	6	2100				Str
C1603	12	2070				Str
C1604	12	2100				Str
R1301E	8	1180				50
R1302E	10	1180				50
R1303E	12	3200				Str
R1901E	16	1570				Str
R1902E	6	1500				Str
W1301E	8	3220	2860			50
W1302E	8	3580				Str
W1303E–W1307E	2 Ea.	1840 to 1240	1480 to 880			50
W1308E–W1312E	2 Ea.	2200 to 1600				Str
W1313	5	3430				50
W1314	5	2240				50
W2501	16	3200				Str
W2502	4	2070				Str
W2503	4	1630				Str
W2504	4	2850				152

E – Denotes Epoxy Coated Bar

BENDING DIAGRAMS
DIMENSIONS ARE OUT TO OUT OF BARS

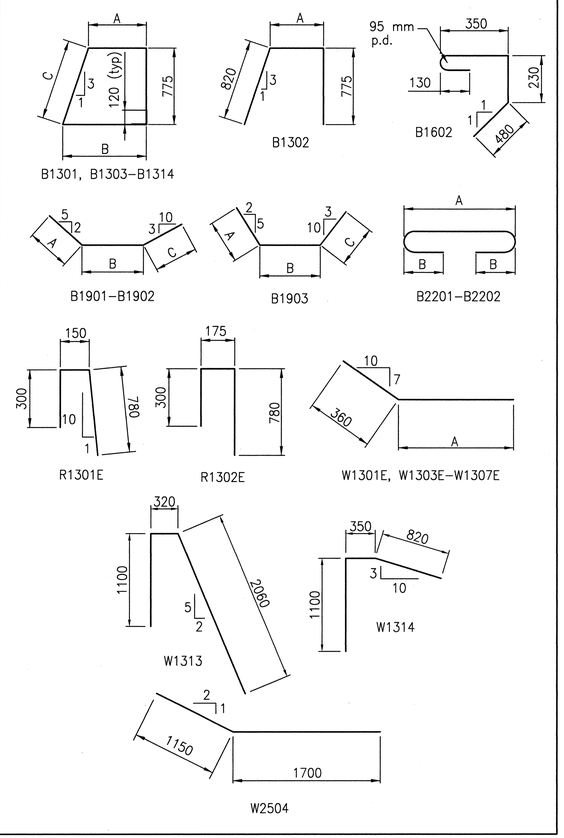

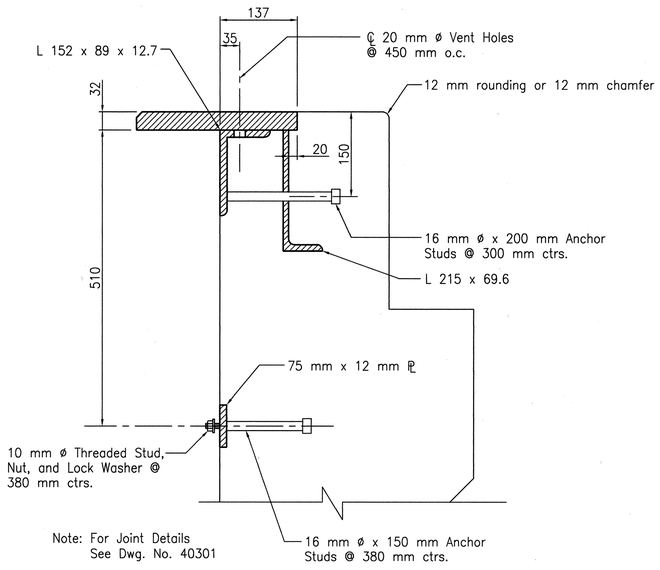

Note: For Joint Details See Dwg. No. 40301

DETAIL "Z"
N.T.S.

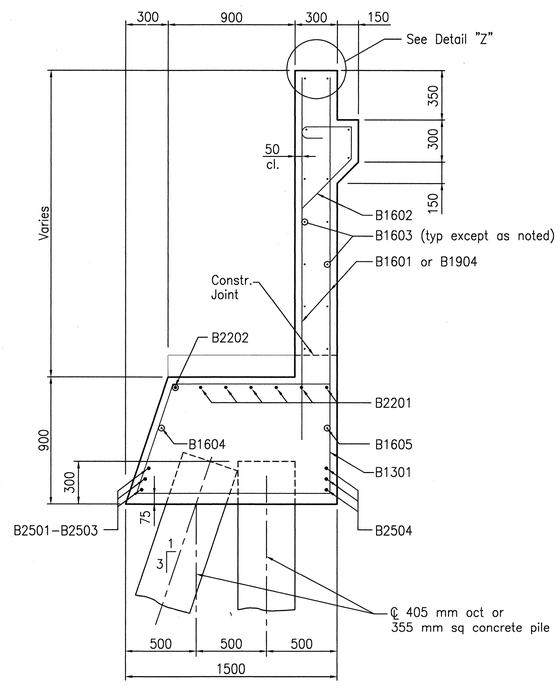

VIEW C–C
1:20

MICROFILMED
AUG 28 2000

STATE OF ARKANSAS
Marc Barry
REGISTERED PROFESSIONAL ENGINEER
No. 10204
08-03-00
MARC T. BARRY

BRIDGE ENGINEER

SHEET 3 OF 4
DETAILS OF END BENTS
CR20/26 OVER US71
MILLER COUNTY
US71
ARKANSAS STATE HIGHWAY COMMISSION
LITTLE ROCK, ARKANSAS

DRAWN BY: JFS DATE: 08–02–00
CHECKED BY: MTB/WMG DATE: 08–02–00
DESIGNED BY: MTB DATE: 08–02–00
BRIDGE NO. 06786 DRAWING NO. 40292

SCALE: 1:20 (OR AS NOTED) METRIC

DATE REVISED	DATE FILMED	DATE REVISED	DATE FILMED	FED. ROAD DIST. NO.	STATE	FED. AID PROJ. NO.	SHEET NO.	TOTAL SHEETS
				6	ARK			
				JOB NO.		R30095	170	541
				1	06786	END BENTS	40293	

Note: All dimensions are in millimeters (mm) unless noted otherwise.
For General Notes, see Dwg. No. 40249

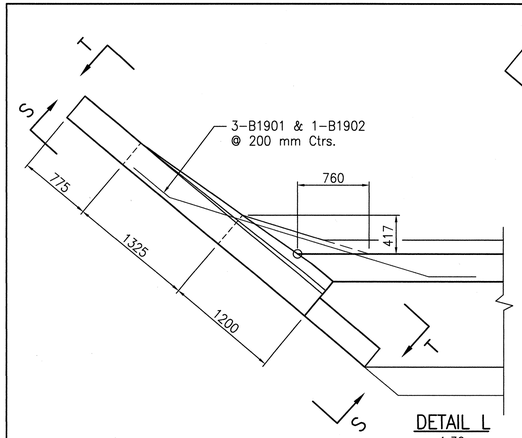

DETAIL L
1:30

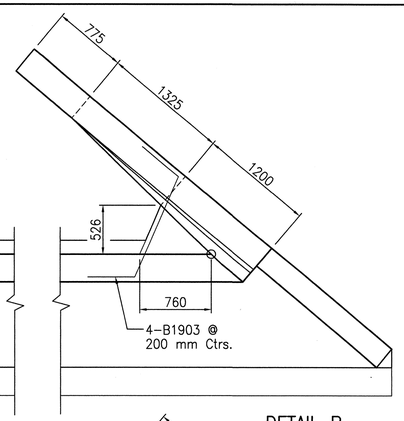

DETAIL R
1:30

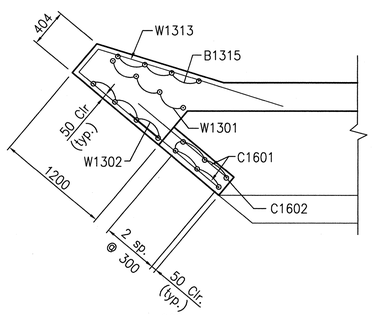

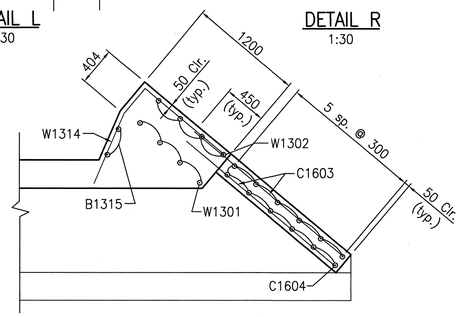

SECTION Z-Z
1:30

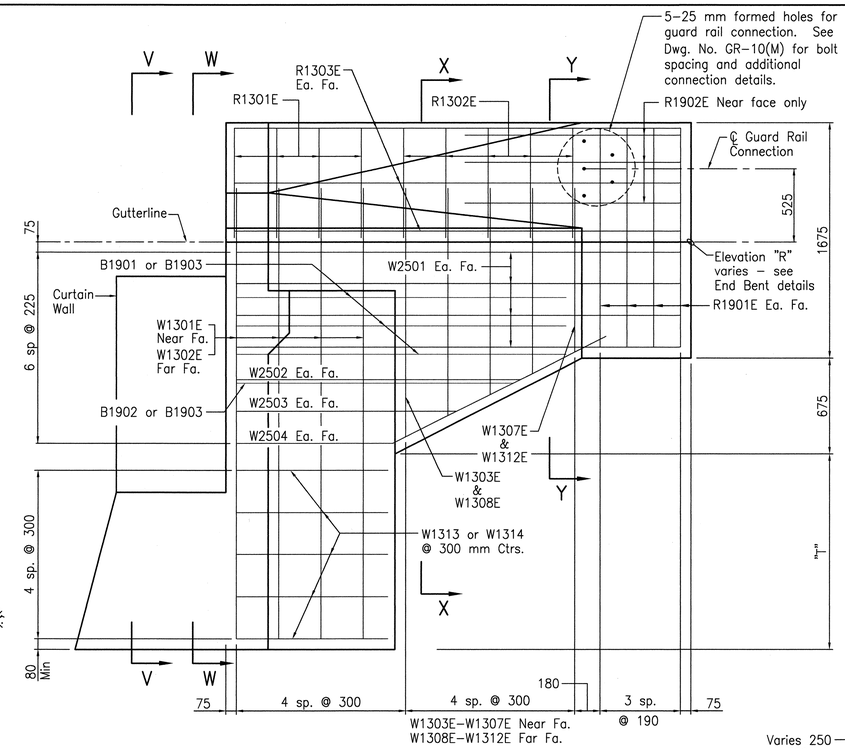

SECTION T-T
1:20

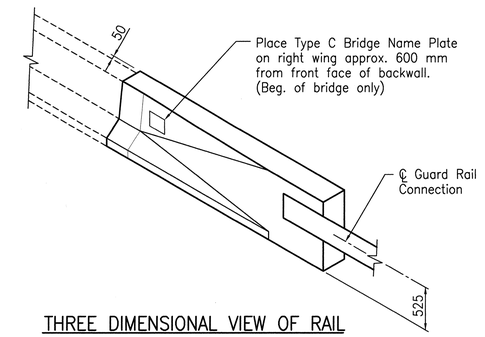

THREE DIMENSIONAL VIEW OF RAIL
N.T.S.

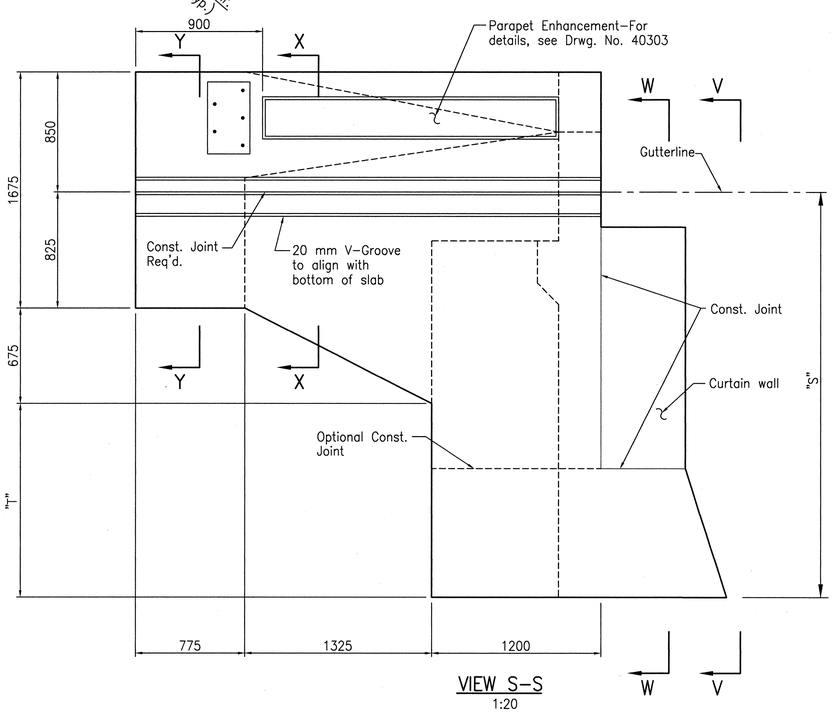

VIEW S-S
1:20

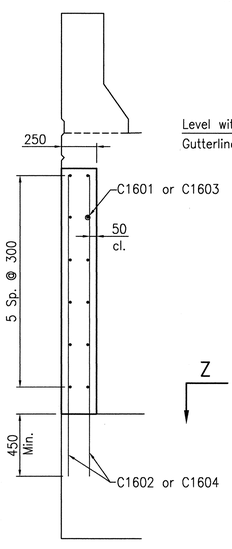

VIEW V-V
1:20

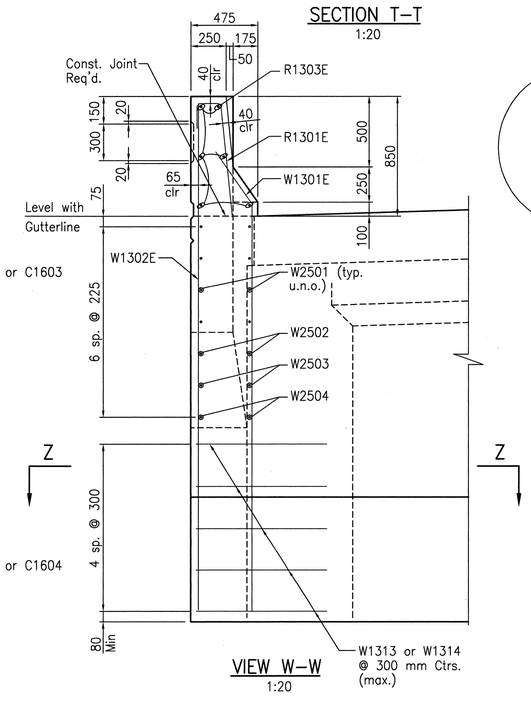

VIEW W-W
1:20

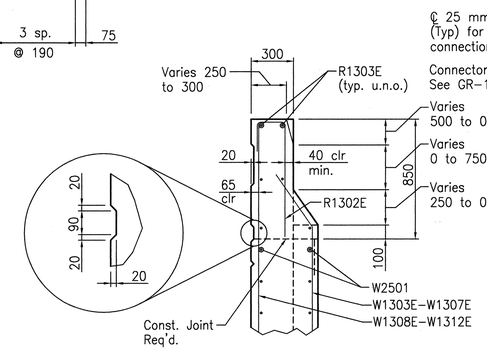

SECTION X-X
1:20

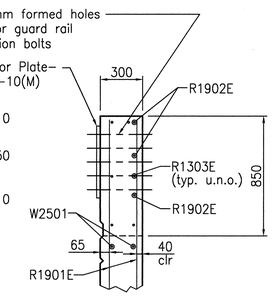

SECTION Y-Y
1:20

	Transition Rail Variables	S	T
Bent 1	Left Wing	2838	1338
	Right Wing	2878	1378
Bent 5	Left Wing	2827	1327
	Right Wing	2935	1435

Note: Wing Designations Are Looking Ahead

STATE OF ARKANSAS
REGISTERED PROFESSIONAL ENGINEER
No. 10204
08-02-00
MARC T. BARRY

BRIDGE ENGINEER

SHEET 4 OF 4
DETAILS OF END BENTS
CR20/26 OVER US71
MILLER COUNTY
US71
ARKANSAS STATE HIGHWAY COMMISSION
LITTLE ROCK, ARKANSAS

DRAWN BY: JFS DATE: 08-02-00
CHECKED BY: MTB/WMG DATE: 08-02-00
DESIGNED BY: MTB DATE: 08-02-00
BRIDGE NO. 06786 DRAWING NO. 40293
SCALE: 1:20 (OR AS NOTED) METRIC

MICROFILMED
AUG 28 2000

DATE REVISED	DATE FILMED	DATE REVISED	DATE FILMED	FED. ROAD DIST. NO.	STATE	FED. AID PROJ. NO.	SHEET NO.	TOTAL SHEETS
				6	ARK			
				JOB NO.		R30095	171	541
				(1) 06786		INT. BENTS	40294	

Note: All dimensions are in millimeters (mm) unless noted otherwise.
For General Notes, see Dwg. No. 40249

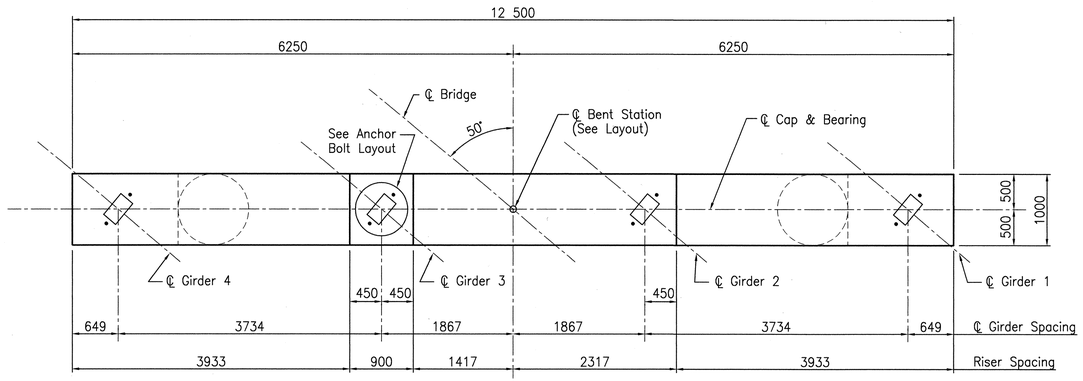

PLAN
1:40

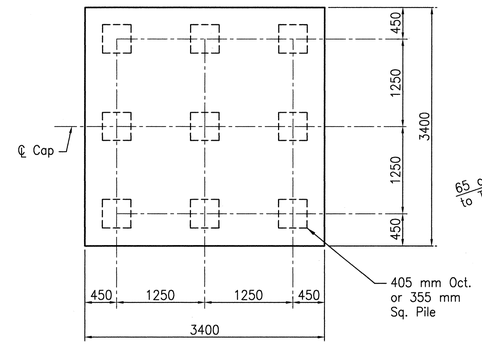

PLAN OF FOOTING
1:40

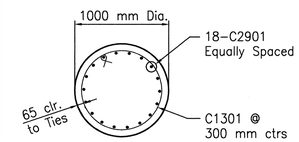

SECTION C–C
1:30

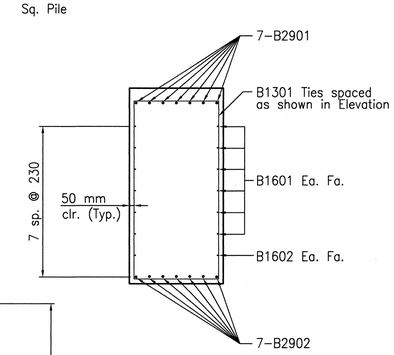

SECTION B–B
1:30

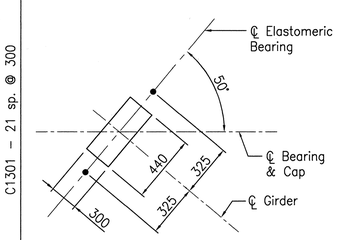

ANCHOR BOLT LAYOUT
N.T.S.

BAR LIST PER BENT

MARK	NO. REQ'D	LENGTH	A	B	PIN DIA.
B1301	39	5710	1900	900	50
B1302	16	4650	1900	900	50
B1303–B1305	2 ea.	4730–5090	1410–1590	900	50
B1306–B1310	2 ea.	5190–5610	1640–1850	900	50
B1601	12	12 400			Str.
B1602	2	11 030			Str.
B2901	7	13 160	12 400	260	228
B2902	7	12 560			228
C1301	44	3060			76
C2901	36	6500			Str.
F1901	84	3680	3240	160	114
F2901	36	3310	2930	260	228

BENDING DIAGRAMS

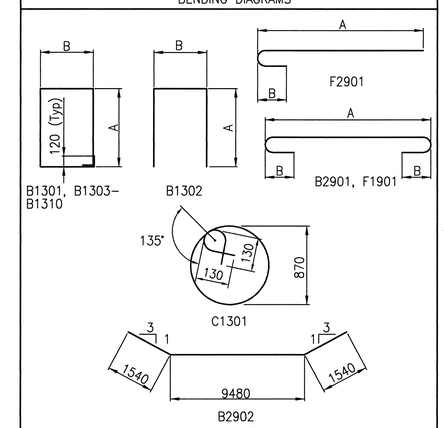

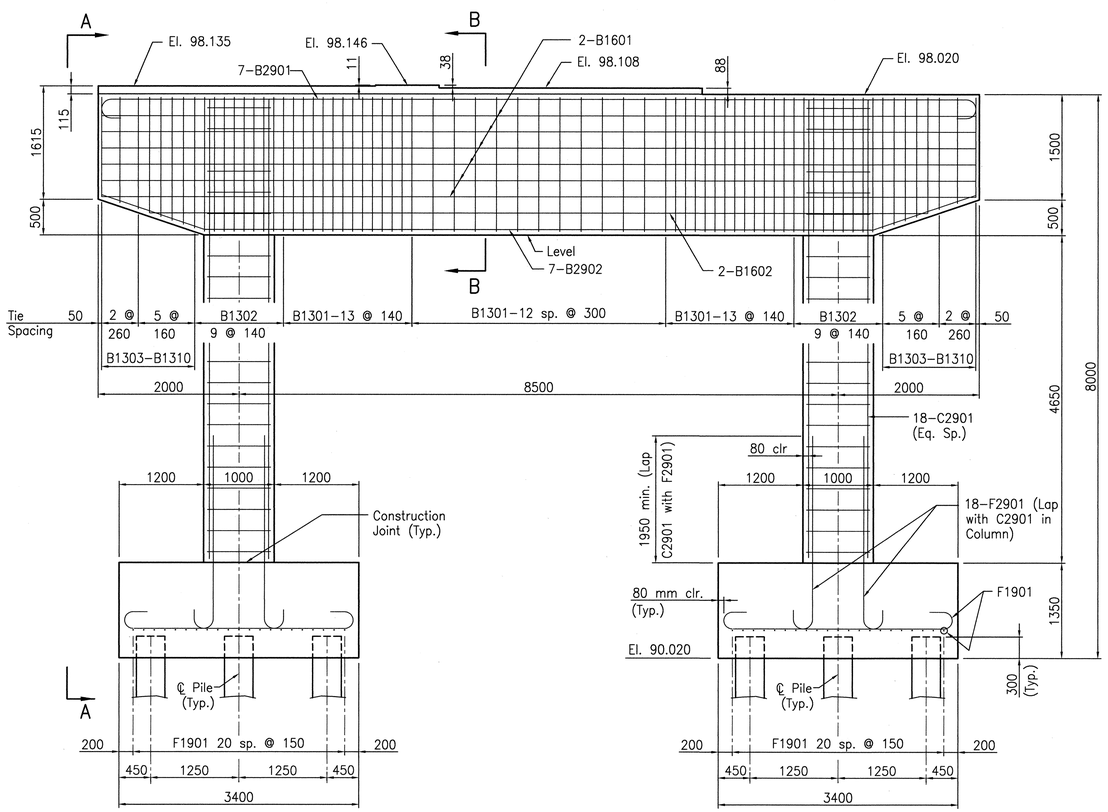

ELEVATION
1:40 (Looking Ahead)

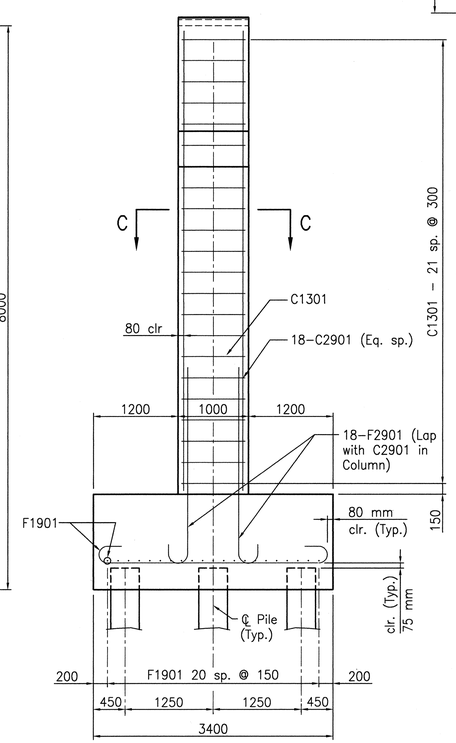

VIEW A–A
1:40

STATE OF ARKANSAS
Marc Barry
REGISTERED PROFESSIONAL ENGINEER
No. 10204
08-02-00
MARC T. BARRY

BRIDGE ENGINEER

DETAILS OF BENT 2
CR20/26 OVER US71
MILLER COUNTY
US71
ARKANSAS STATE HIGHWAY COMMISSION

LITTLE ROCK, ARKANSAS

DRAWN BY: JFS DATE: 08–02–00
CHECKED BY: MTB/WMG DATE: 08–02–00
DESIGNED BY: MTB DATE: 08–02–00
BRIDGE NO. 06786
SCALE: 1:40 METRIC
DRAWING NO. 40294

MICROFILMED
AUG 28 2000

DATE REVISED	DATE FILMED	DATE REVISED	DATE FILMED

FED. ROAD DIST. NO.	STATE	FED. AID PROJ. NO.	SHEET NO.	TOTAL SHEETS
6	ARK			
JOB NO.		R30095	172	541
1 06786		INT. BENTS	40295	

Note: All dimensions are in millimeters (mm) unless noted otherwise.
For General Notes, see Dwg. No. 40249

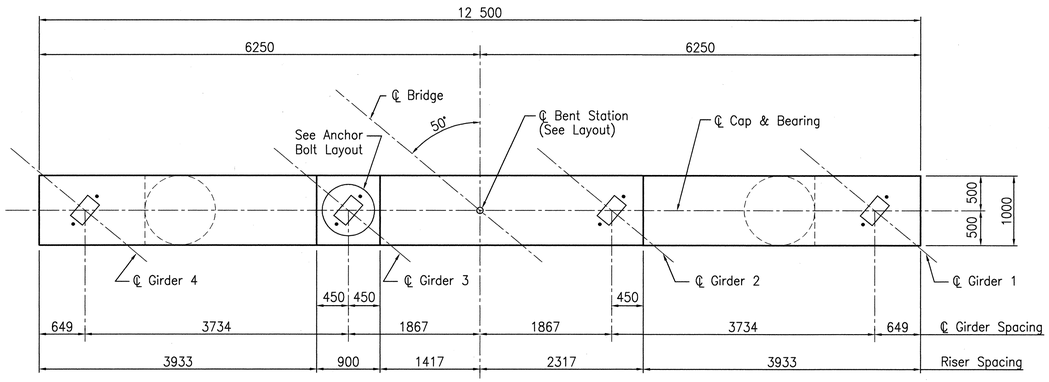

PLAN
1:40

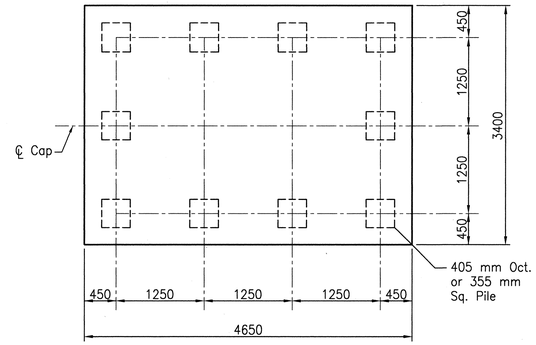

PLAN OF FOOTING
1:40

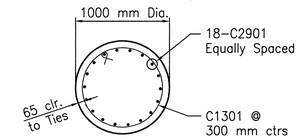

SECTION C–C
1:30

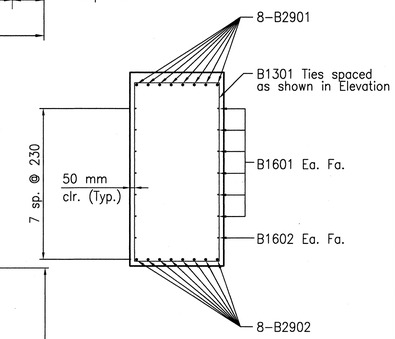

SECTION B–B
1:30

BAR LIST PER BENT

MARK	NO. REQ'D	LENGTH	A	B	PIN DIA.
B1301	51	5710	1900	900	50
B1302	18	4650	1900	900	50
B1303–B1305	2 ea.	4730–5110	1410–1600	900	50
B1306–B1312	2 ea.	5190–5670	1640–1880	900	50
B1601	12	12 400			Str.
B1602	2	11 030			Str.
B2901	8	13 160	12 400	260	228
B2902	8	12 560			228
C1301	50	3060			76
C2901	36	7400			Str.
F1901	52	4930	4490	160	114
F1902	74	3680	3240	160	114
F2901	36	3460	3080	260	228

BENDING DIAGRAMS

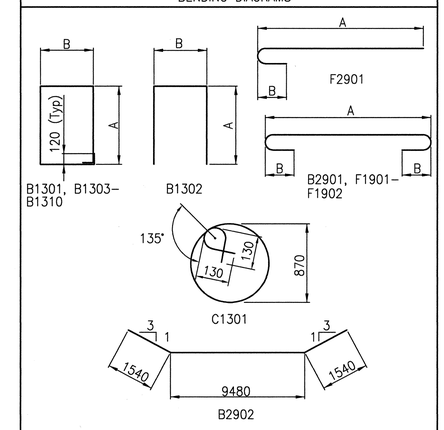

Dimensions are out to out of bars

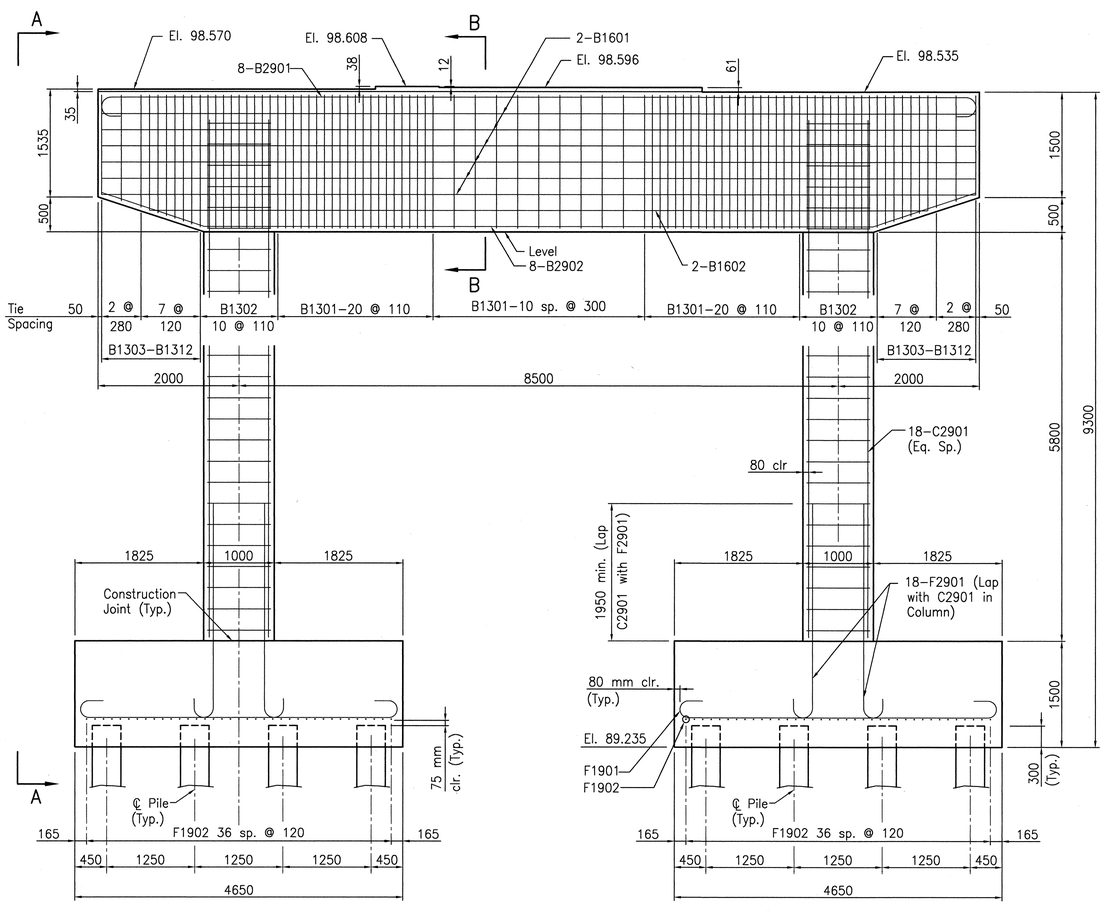

ELEVATION
1:40 (Looking Ahead)

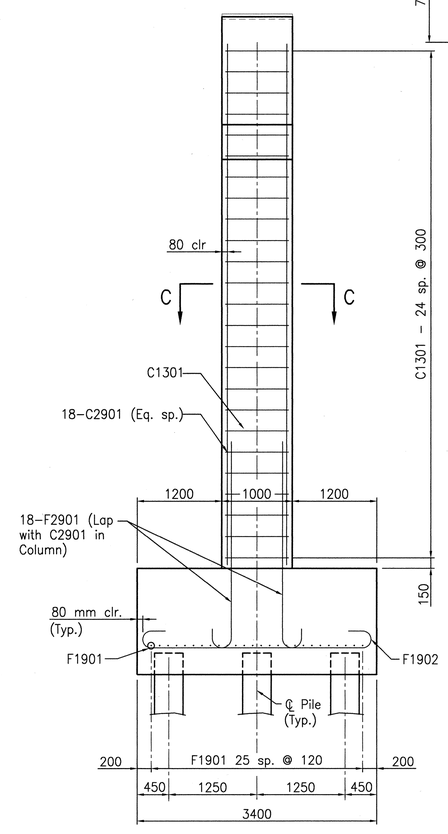

VIEW A–A
1:40

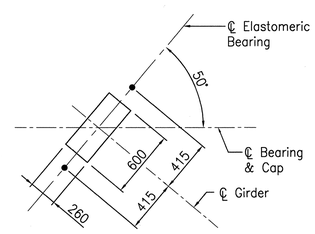

ANCHOR BOLT LAYOUT
N.T.S.

STATE OF ARKANSAS
REGISTERED PROFESSIONAL ENGINEER
No. 10204
08-02-00
MARC T. BARRY

BRIDGE ENGINEER

DETAILS OF BENT 3
CR20/26 OVER US71
MILLER COUNTY
US71
ARKANSAS STATE HIGHWAY COMMISSION

LITTLE ROCK, ARKANSAS

DRAWN BY: JFS DATE: 08-02-00
CHECKED BY: MTB/WMG DATE: 08-02-00
DESIGNED BY: MTB DATE: 08-02-00
BRIDGE NO. 06786

SCALE: 1:40 METRIC

DRAWING NO. 40295

METRIC D

MICROFILMED
AUG 28 2000

DATE REVISED	DATE FILMED	DATE REVISED	DATE FILMED

FED. ROAD DIST. NO.	STATE	FED. AID PROJ. NO.	SHEET NO.	TOTAL SHEETS
6	ARK			
JOB NO.	R30095		173	541
(1) 06786	INT. BENTS		40296	

Note: All dimensions are in millimeters (mm) unless noted otherwise.
For General Notes, see Dwg. No. 40249

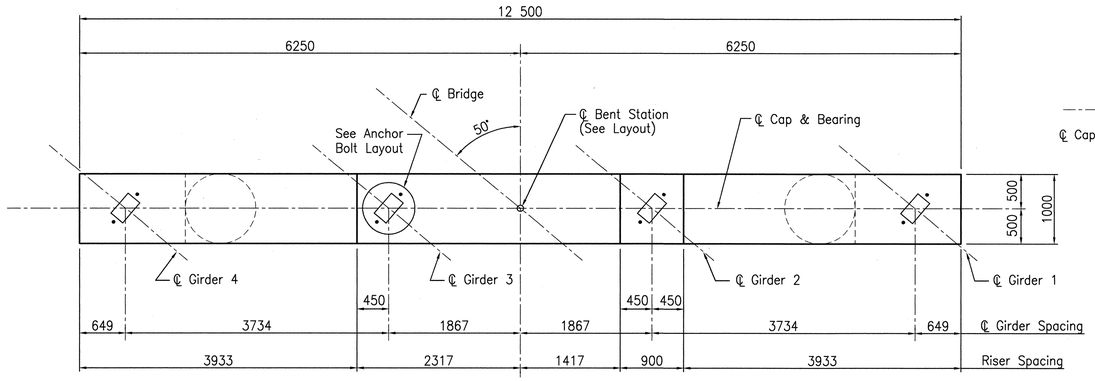

PLAN
1:40

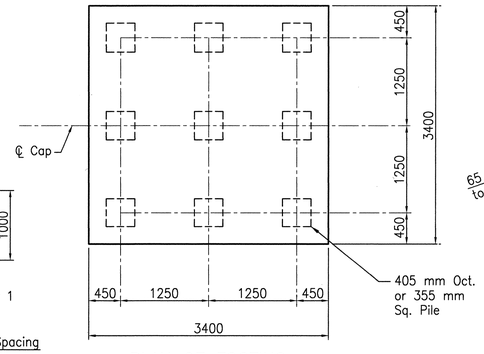

PLAN OF FOOTING
1:40

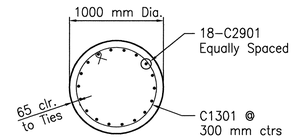

SECTION C–C
1:30

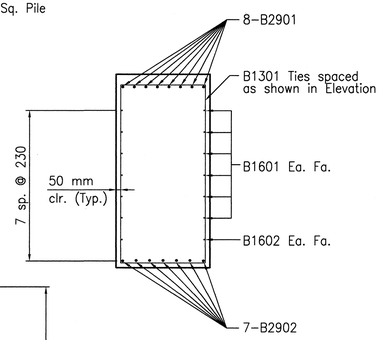

SECTION B–B
1:30

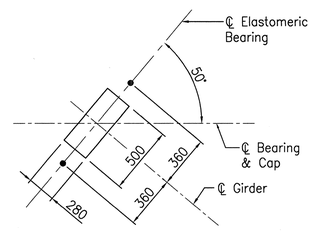

ANCHOR BOLT LAYOUT
N.T.S.

BAR LIST PER BENT

MARK	NO. REQ'D	LENGTH	A	B	PIN DIA.
B1301	45	5710	1900	900	50
B1302	16	4650	1900	900	50
B1303–B1305	2 ea.	4730–5110	1410–1600	900	50
B1306–B1311	2 ea.	5210–5670	1650–1880	900	50
B1601	12	12 400			Str.
B1602	2	11 030			Str.
B2901	8	13 160	12 400	260	228
B2902	7	12 560			228
C1301	48	3060			76
C2901	36	7200			Str.
F1901	84	3680	3240	160	114
F2901	36	3310	2930	260	228

BENDING DIAGRAMS

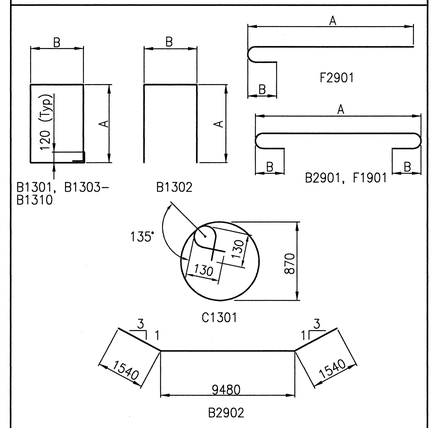

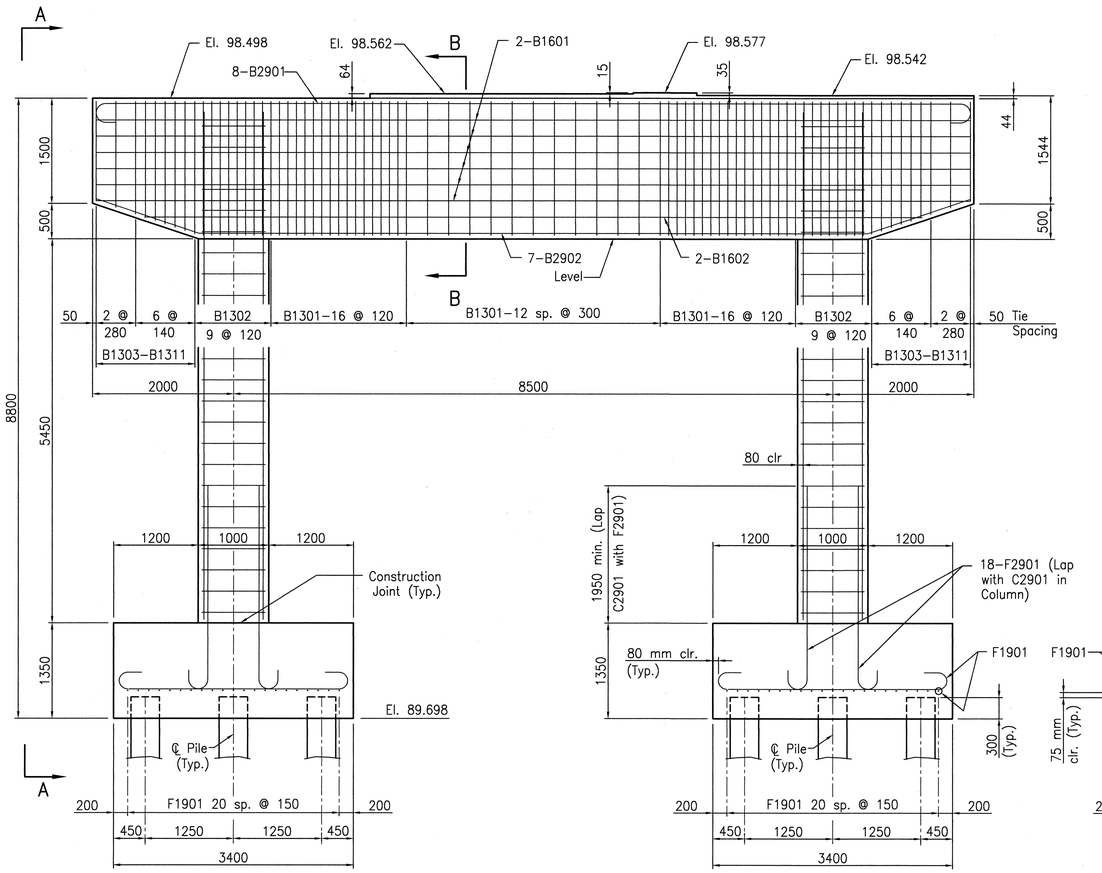

ELEVATION
1:40 (Looking Ahead)

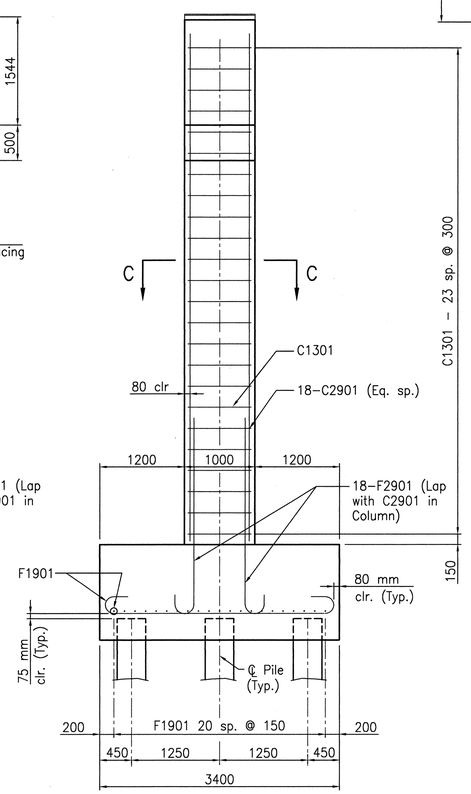

VIEW A–A
1:40

STATE OF ARKANSAS
Marc Barry
REGISTERED PROFESSIONAL ENGINEER
No. 10204
08-03-00
MARC T. BARRY

BRIDGE ENGINEER

DETAILS OF BENT 4
CR20/26 OVER US71
MILLER COUNTY
US71
ARKANSAS STATE HIGHWAY COMMISSION

LITTLE ROCK, ARKANSAS

DRAWN BY: JFS DATE: 08–02–00
CHECKED BY: MTB/WMG DATE: 08–02–00
DESIGNED BY: MTB DATE: 08–02–00
BRIDGE NO. 06786
DRAWING NO. 40296
SCALE: 1:40 METRIC

MICROFILMED
AUG 28 2000

DATE REVISED	DATE FILMED	DATE REVISED	DATE FILMED	FED. ROAD DIST. NO.	STATE	FED. AID PROJ. NO.	SHEET NO.	TOTAL SHEETS
				6	ARK			
				JOB NO.		R30095	174	541
				1	06786	SPAN DETAILS	40297	

Note: All dimensions are in millimeters (mm) unless noted otherwise.
For General Notes, see Dwg. No. 40249

Note:
Class 1 Protective Surface Treatment shall be applied to the bridge deck and roadway face and top of parapet.

Note:
At Contractor's Option, in lieu of providing Bar S1902E, an epoxy coated straight #19 bar top and bottom may be substituted. Payment for reinforcing will be based on the weight of Bar S1902E.

Note:
The superstructure details shown are for use when removable deck forming is used and are the basis for measurement of Class S(AE) Concrete. See Standard Drawing No. 36515 for allowable modifications and for tolerances when permanent steel bridge deck forms are used.

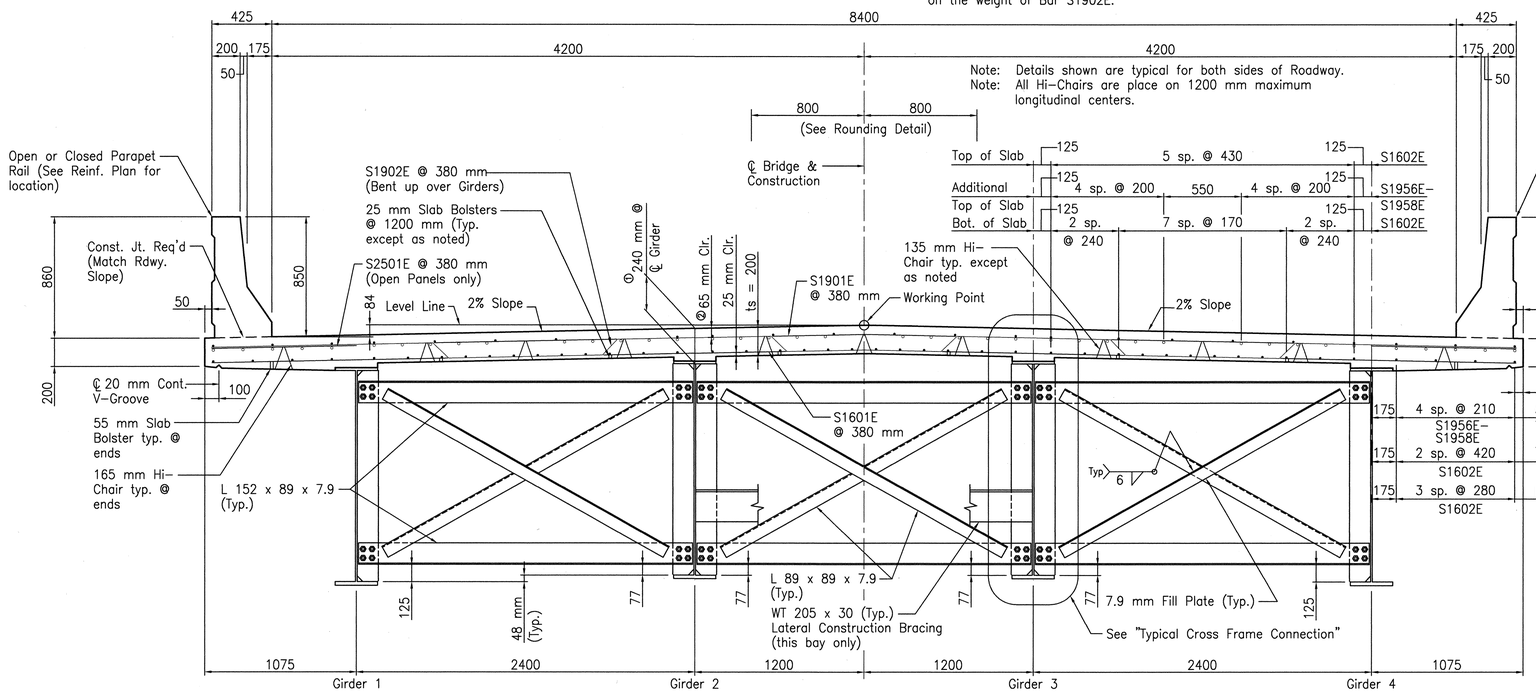

TYPICAL ROADWAY SECTION
1:20

① See "Adjustment For Slab Thickness Tolerance When Removable Deck Forming Is Used" (Drg. No. 40301).

② Tolerance: Minus = 6 mm
Plus: Equal to amount of Slab Thickening used to meet slab thickness tolerances – See "Adjustment For Slab Thickness Tolerance When Removable Deck Forming Is Used" (Dwg. No. 40301).

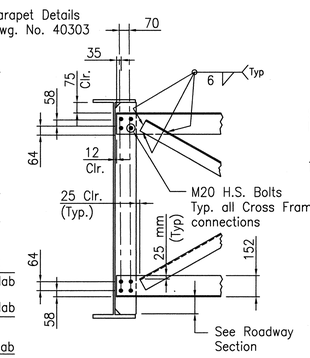

TYP. CROSS FRAME CONNECTION
1:20

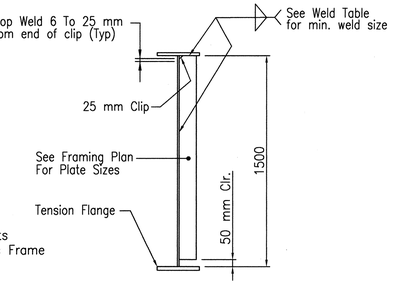

INTERMEDIATE STIFFENER DETAIL
1:20

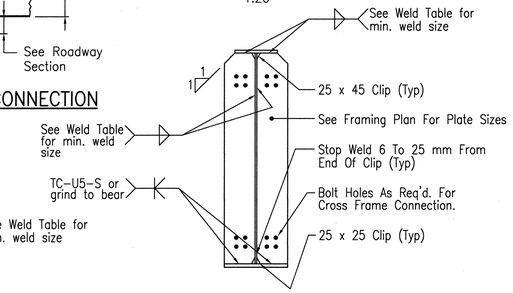

BEARING STIFFENER DETAIL
1:20 (Interior Girders Bents 1 Thru 5)

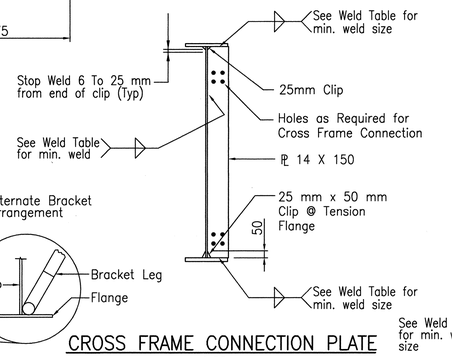

CROSS FRAME CONNECTION PLATE
1:20

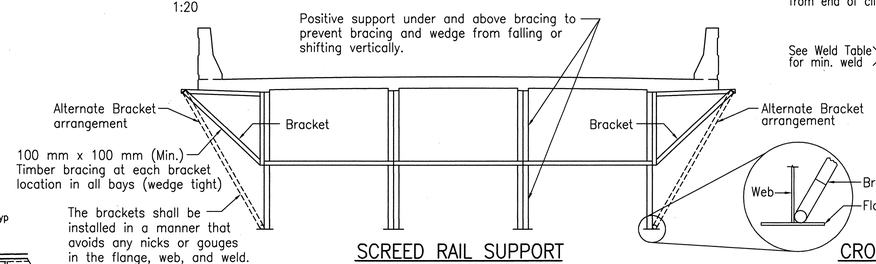

SCREED RAIL SUPPORT
N.T.S.

Note: If a transverse finishing machine is used, the rail shall be supported directly over the exterior girders or, as an alternate, the rail may be supported by the overhang brackets if the above strutting system is used. The strutting system may be omitted if 12 mm X 120 mm web stiffeners are welded to the insides of the exterior girders at the location of each bracket or if the alternate bracket arrangement shown above is used. The Alternate Bracket arrangement shall extend down to the junction of the web and bottom flange. The stiffener shall conform to the details for intermediate conection plates shown. No direct payment will be made for brackets, timber bracing, supports, or welded stiffeners. Payment shall be subsidiary to "Structural Steel in Plate Girder Spans (M270, Gr. 345W)."

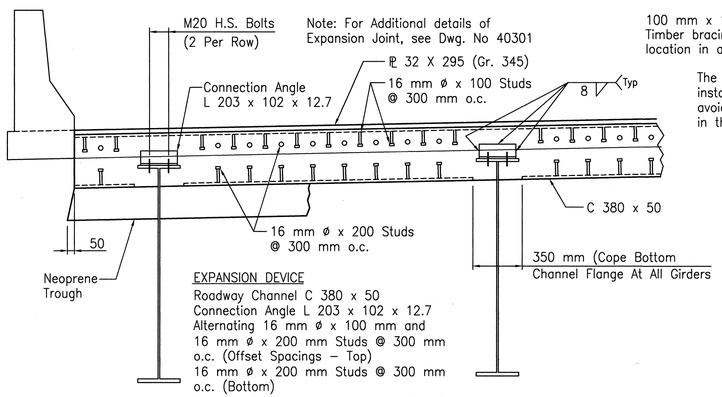

EXPANSION DEVICE
Roadway Channel C 380 x 50
Connection Angle L 203 x 102 x 12.7
Alternating 16 mm ø x 100 mm and 16 mm ø x 200 mm Studs @ 300 mm o.c. (Offset Spacings – Top)
16 mm ø x 200 mm Studs @ 300 mm o.c. (Bottom)
Detail Device 4 mm High and Provide 8 mm Shims Using 2–2 mm & 1–4 mm Plates

Note:
Cross Frames same as shown in Roadway Section Above.

PARTIAL ROADWAY SECTION AT EXPANSION DEVICE
1:20

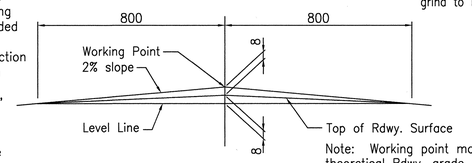

ROUNDING DETAIL
NTS

Note: Working point matches theoretical Rdwy. grade. Maintain slab thickness t_s under rounding.

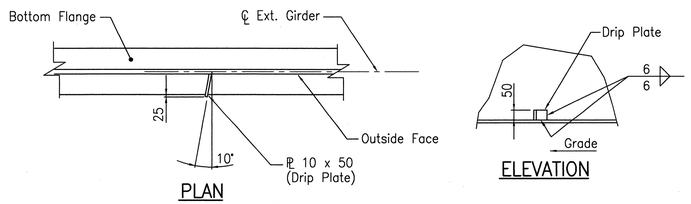

PLAN

ELEVATION

BOTTOM FLANGE DRIP PLATE
N.T.S.

Note: Bottom flange drip plate to be welded to outside face of exterior girders only. Locate drip plate 900 mm from ℄ Bearing on high side of each bent.

MICROFILMED
AUG 28 2000

STATE OF ARKANSAS
Marc T. Barry
REGISTERED PROFESSIONAL ENGINEER
No. 10204
08-02-00
MARC T. BARRY

BRIDGE ENGINEER

SHEET 1 OF 7
DETAILS OF 159 m CONT. COMP. PLATE GIRDER UNIT
CR20/26 OVER US71
MILLER COUNTY
US71
ARKANSAS STATE HIGHWAY COMMISSION
LITTLE ROCK, ARKANSAS

DRAWN BY: JFS DATE: 08–02–00
CHECKED BY: MTB/WMG DATE: 08–02–00
DESIGNED BY: MTB DATE: 08–02–00
BRIDGE NO. 06786
SCALE: 1:20 METRIC
DRAWING NO. 40297
METRIC D

DATE REVISED	DATE FILMED	DATE REVISED	DATE FILMED

FED. ROAD DIST. NO.	STATE	FED. AID PROJ. NO.	SHEET NO.	TOTAL SHEETS
6	ARK			
JOB NO.		R30095	175	541
1	06786	SPAN DETAILS	40298	

Note: All dimensions are in millimeters (mm) unless noted otherwise.
For General Notes, see Dwg. No. 40249

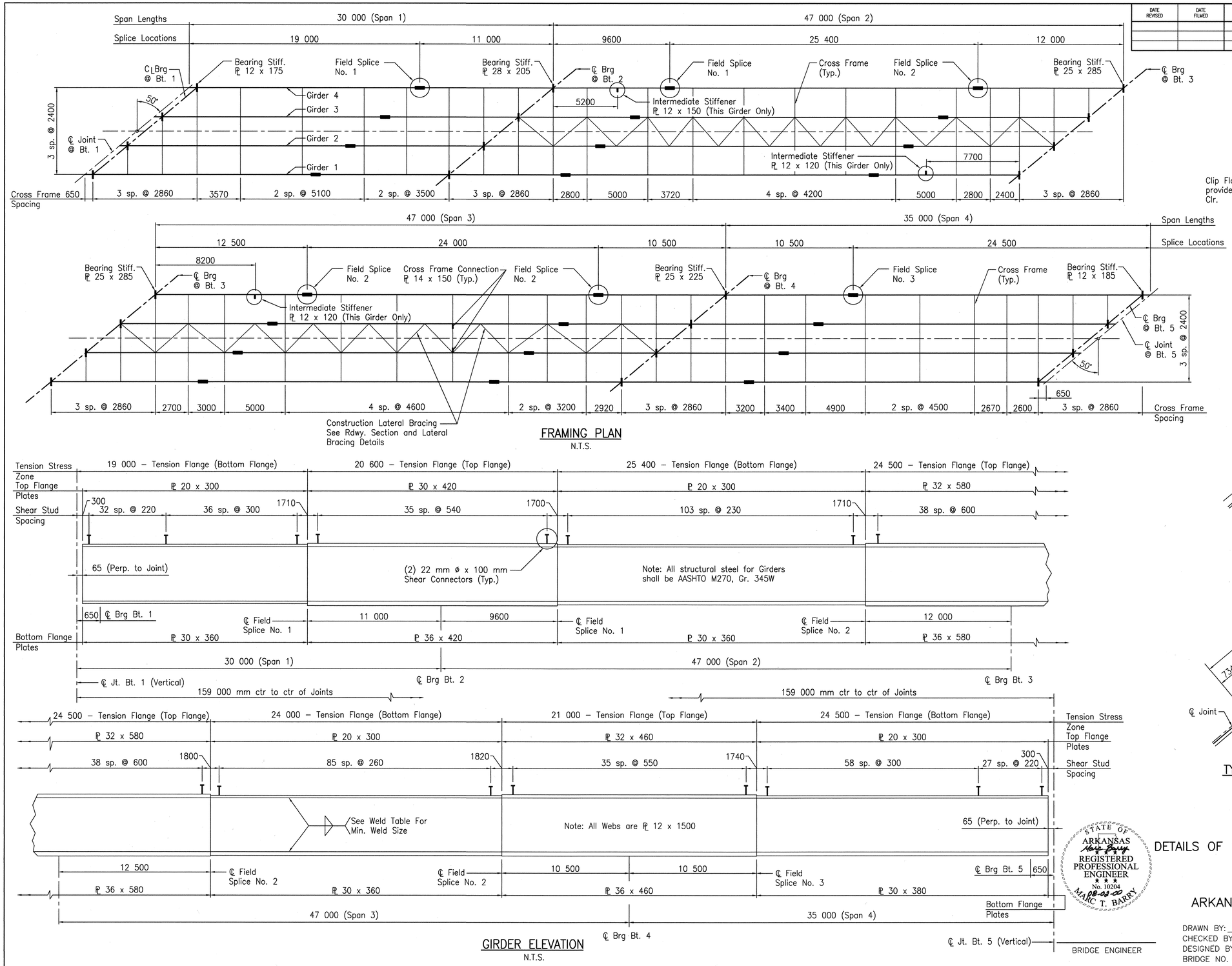

GIRDER ELEVATION
N.T.S.

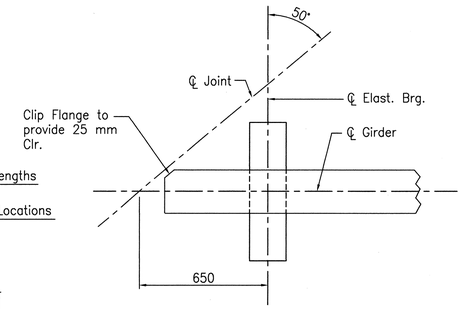

PLAN OF BEARING AT END BENT
N.T.S.

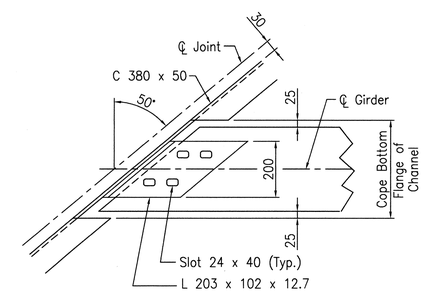

TYPICAL CHANNEL CONNECTION
1:10

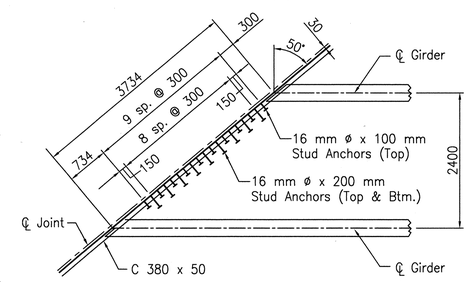

TYPICAL ANCHOR PLAN FOR EXPANSION DEVICE
1:50

MICROFILMED
AUG 28 2000

STATE OF ARKANSAS
Marc Barry
REGISTERED PROFESSIONAL ENGINEER
No. 10204
08-03-00
MARC T. BARRY

SHEET 2 OF 7
DETAILS OF 159 m CONT. COMP. PLATE GIRDER UNIT
CR20/26 OVER US71
MILLER COUNTY
US71
ARKANSAS STATE HIGHWAY COMMISSION
LITTLE ROCK, ARKANSAS

DRAWN BY: JFS DATE: 08-02-00
CHECKED BY: MTB/WMG DATE: 08-02-00
DESIGNED BY: MTB DATE: 08-02-00
BRIDGE NO. 06786 DRAWING NO. 40298
SCALE: 1:50 (OR AS NOTED) METRIC

DATE REVISED	DATE FILMED	DATE REVISED	DATE FILMED	FED. ROAD DIST. NO.	STATE	FED. AID PROJ. NO.	SHEET NO.	TOTAL SHEETS
L				6	ARK			
				JOB NO.		R30095	176	541
				(1) 06786		SPAN DETAILS		40299

Note: All dimensions are in millimeters (mm) unless noted otherwise.
For General Notes, see Dwg. No. 40249

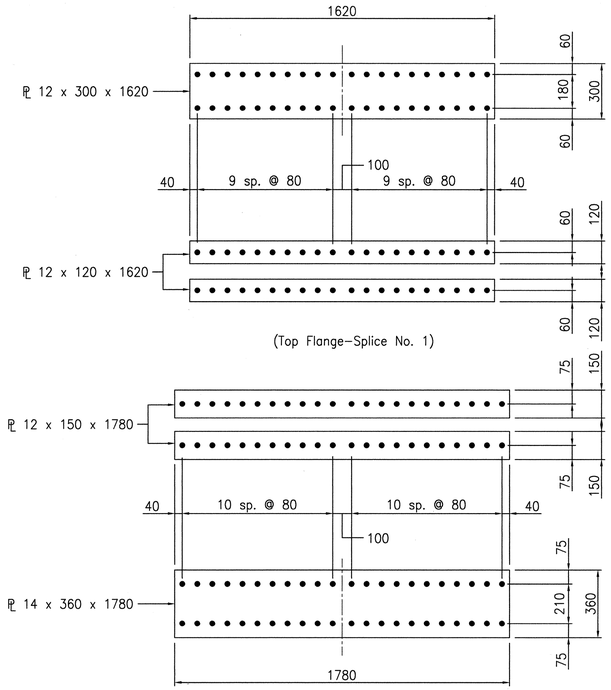

(Top Flange–Splice No. 1)

(Bottom Flange–Splice No. 1)

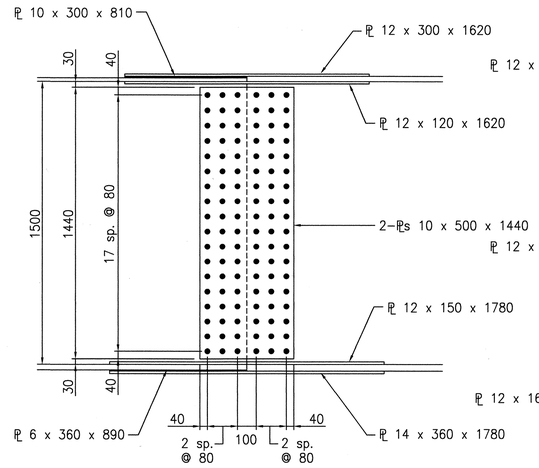

FIELD SPLICE NO. 1
N.T.S.

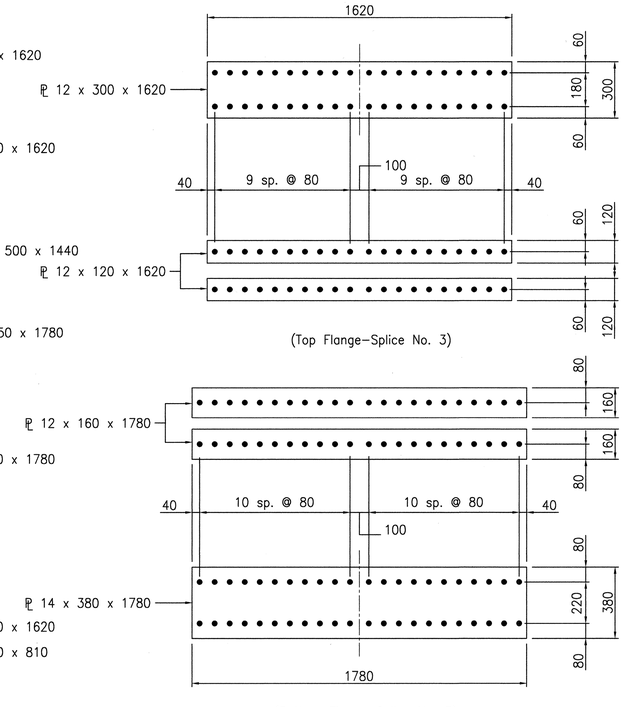

(Top Flange–Splice No. 3)

(Bottom Flange–Splice No. 3)

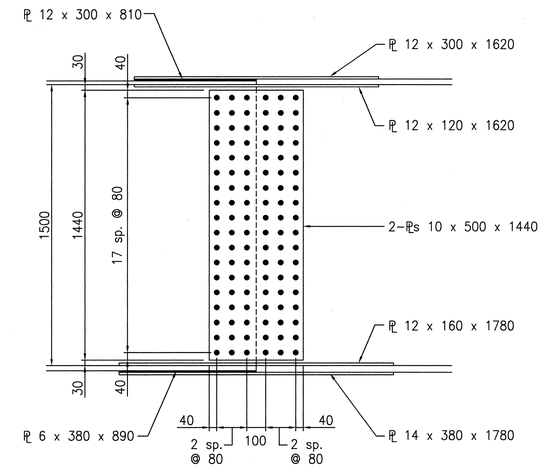

FIELD SPLICE NO. 3
N.T.S.

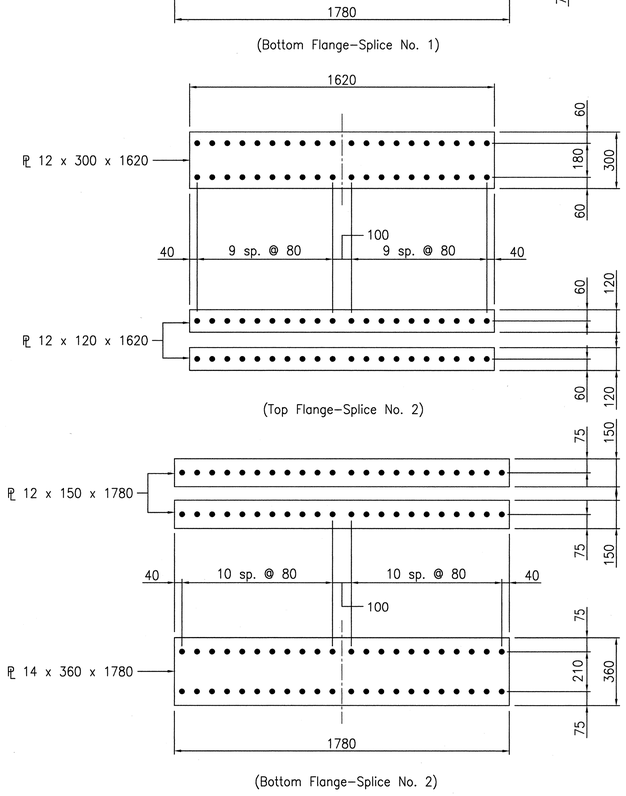

(Top Flange–Splice No. 2)

(Bottom Flange–Splice No. 2)

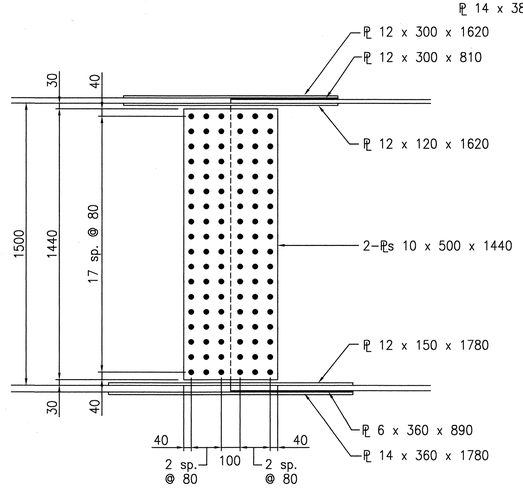

FIELD SPLICE NO. 2
N.T.S.

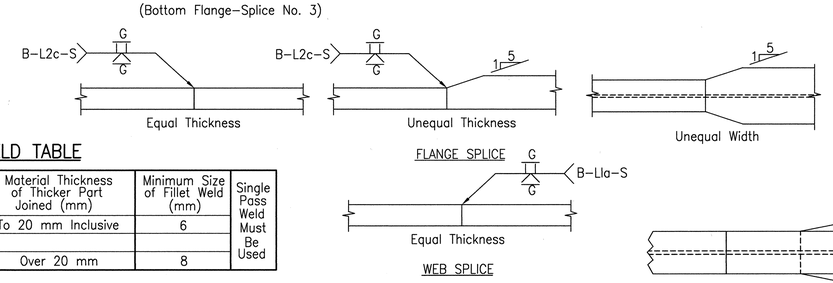

DETAILS OF WELDED SPLICES
N.T.S.

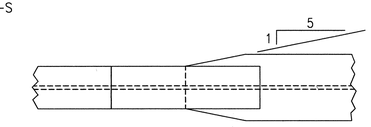

FIELD SPLICE AT UNEQUAL FLANGE WIDTHS
N.T.S.

WELD TABLE

Material Thickness of Thicker Part Joined (mm)	Minimum Size of Fillet Weld (mm)	Single Pass Weld Must Be Used
To 20 mm Inclusive	6	
Over 20 mm	8	

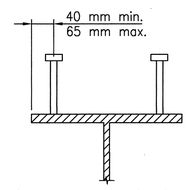

Stud Shear Connectors shown shall be 22 mm ø x 100 mm long, granular flux filled, solid fluxed or equal, and automatically end welded to the beam flange in accordance with the recommendations of the Manufacturer. 20 mm ø studs may be used in place of the 22 mm ø studs shown at the ratio of 1.210–20 mm ø studs in place of one 22 mm ø stud. 22 mm ø studs will be used as basis for measurement of structural steel in shear connectors. Maximum stud spacing = 600 mm.

SHEAR CONNECTION DETAIL
N.T.S.

FIELD SPLICE NOTES:
1. All Field Splice Plates to be AASHTO M270, Gr. 345W.
2. All Field Splice Bolts shall be M22 H.S. Bolts.

STATE OF ARKANSAS
Marc T. Barry
REGISTERED PROFESSIONAL ENGINEER
No. 10204
08-02-00
MARC T. BARRY

BRIDGE ENGINEER

SHEET 3 OF 7
DETAILS OF 159 m CONT. COMP. PLATE GIRDER UNIT
CR20/26 OVER US71
MILLER COUNTY
US71
ARKANSAS STATE HIGHWAY COMMISSION
LITTLE ROCK, ARKANSAS

DRAWN BY: JFS DATE: 08–02–00
CHECKED BY: MTB/WMG DATE: 08–02–00
DESIGNED BY: MTB DATE: 08–02–00
BRIDGE NO. 06786
SCALE: N.T.S. METRIC
DRAWING NO. 40299

H METRIC D

MICROFILMED
AUG 28 2000

DATE REVISED	DATE FILMED	DATE REVISED	DATE FILMED	FED. ROAD DIST. NO.	STATE	FED. AID PROJ. NO.	SHEET NO.	TOTAL SHEETS
				6	ARK			
				JOB NO.		R30095	177	541
				(1) 06786		SPAN DETAILS	40300	

Note: All dimensions are in millimeters (mm) unless noted otherwise.
For General Notes, see Dwg. No. 40249

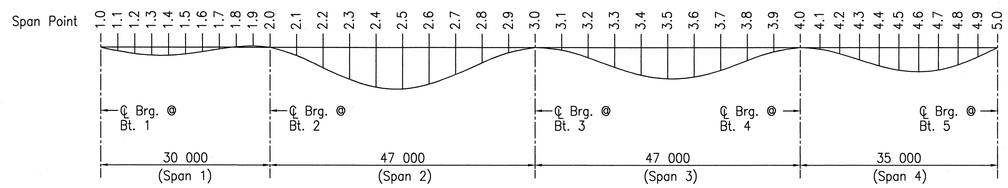

DEAD LOAD DEFLECTION DIAGRAM

N.T.S.

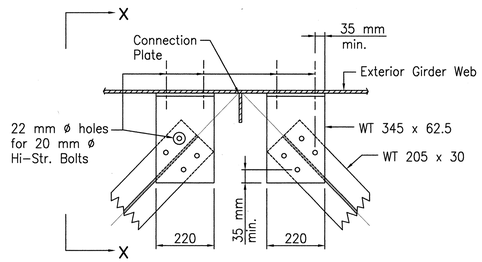

* See Framing Plan for location of lateral bracing.

TYP. LATERAL BRACE CONN. AT EXTERIOR GIRDER

N.T.S.

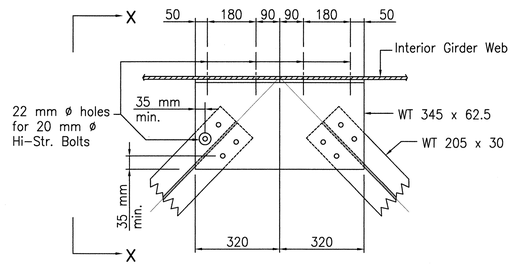

* See Framing Plan for location of lateral bracing.

TYP. LATERAL BRACE CONN. AT INTERIOR GIRDER

N.T.S.

Note: All cross-frame and lateral bracing connections to have 21 mm ø holes for 20 mm high strength bolts.

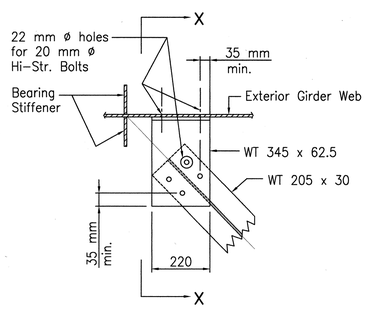

* See Framing Plan for location of lateral bracing.

Note: Sketch shown details at end of unit At piers, details are similar on each side of bearing stiffener.

TYP. LATERAL BRACE CONN. AT BEARING

N.T.S.

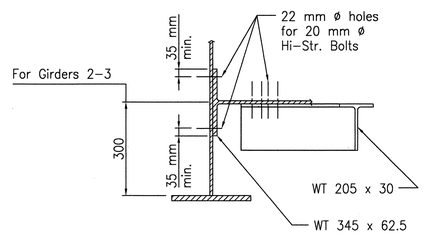

VIEW X – X

N.T.S.

TABLE OF DEFLECTIONS (mm)

Span	Point of Deflection	Interior Girder: Structural Steel	Interior Girder: Structural Steel + Slab	Interior Girder: Structural Steel + Slab + Parapet	Exterior Girder: Structural Steel	Exterior Girder: Structural Steel + Slab	Exterior Girder: Structural Steel + Slab + Parapet
1	1.0	0	0	0	0	0	0
	1.1	1	6	7	1	6	7
	1.2	2	11	12	2	11	12
	1.3	2	14	15	2	13	15
	1.4	2	14	15	2	14	15
	1.5	2	12	13	2	11	13
	1.6	1	8	9	1	8	8
	1.7	1	3	4	1	3	4
	1.8	0	−1	−1	0	−1	−1
	1.9	0	−2	−3	0	−2	−3
	2.0	0	0	0	0	0	0
2	2.1	3	14	16	3	13	15
	2.2	6	35	38	6	33	37
	2.3	10	55	60	10	52	58
	2.4	12	68	75	12	65	72
	2.5	13	71	79	13	68	75
	2.6	11	63	70	11	60	67
	2.7	8	46	51	8	44	49
	2.8	5	26	29	5	25	28
	2.9	2	9	10	2	9	9
	3.0	0	0	0	0	0	0
3	3.1	1	5	5	1	5	5
	3.2	3	18	20	3	17	20
	3.3	6	34	38	6	33	37
	3.4	9	48	54	9	46	52
	3.5	10	55	61	10	52	58
	3.6	9	52	57	9	49	55
	3.7	7	40	44	7	38	42
	3.8	4	23	26	4	22	25
	3.9	1	8	9	1	8	8
	4.0	0	0	0	0	0	0
4	4.1	1	3	3	1	3	3
	4.2	2	11	12	2	10	11
	4.3	4	21	23	4	20	22
	4.4	5	31	34	5	29	32
	4.5	7	38	41	7	36	40
	4.6	7	40	44	7	39	42
	4.7	7	37	41	7	36	39
	4.8	5	29	32	5	28	30
	4.9	3	16	17	3	15	17
	5.0	0	0	0	0	0	0

Note:
Camber for Dead Load Deflection plus Vertical Curve ± 6 mm tolerance.
Deflections shown are from a chord from centerline bearing to centerline bearing. Vertical curve corrections are not included. Negative sign (−) indicates upward deflection.

MICROFILMED
AUG 28 2000

STATE OF ARKANSAS
Marc Barry
REGISTERED PROFESSIONAL ENGINEER
No. 10204
08-02-00
MARC T. BARRY

BRIDGE ENGINEER

SHEET 4 OF 7
DETAILS OF 159 m CONT. COMP. PLATE GIRDER UNIT
CR20/26 OVER US71
MILLER COUNTY
US71
ARKANSAS STATE HIGHWAY COMMISSION
LITTLE ROCK, ARKANSAS

DRAWN BY: JFS DATE: 08-02-00
CHECKED BY: MTB/WMG DATE: 08-02-00
DESIGNED BY: MTB DATE: 08-02-00
BRIDGE NO. 06786 DRAWING NO. 40300
SCALE: N.T.S. METRIC

DATE REVISED	DATE FILMED	DATE REVISED	DATE FILMED	FED. ROAD DIST. NO.	STATE	FED. AID PROJ. NO.	SHEET NO.	TOTAL SHEETS
				6	ARK			
				JOB NO.		R30095	178	541
				1	06786	SPAN DETAILS	40301	

Note: All dimensions are in millimeters (mm) unless noted otherwise.
For General Notes, see Dwg. No. 40249

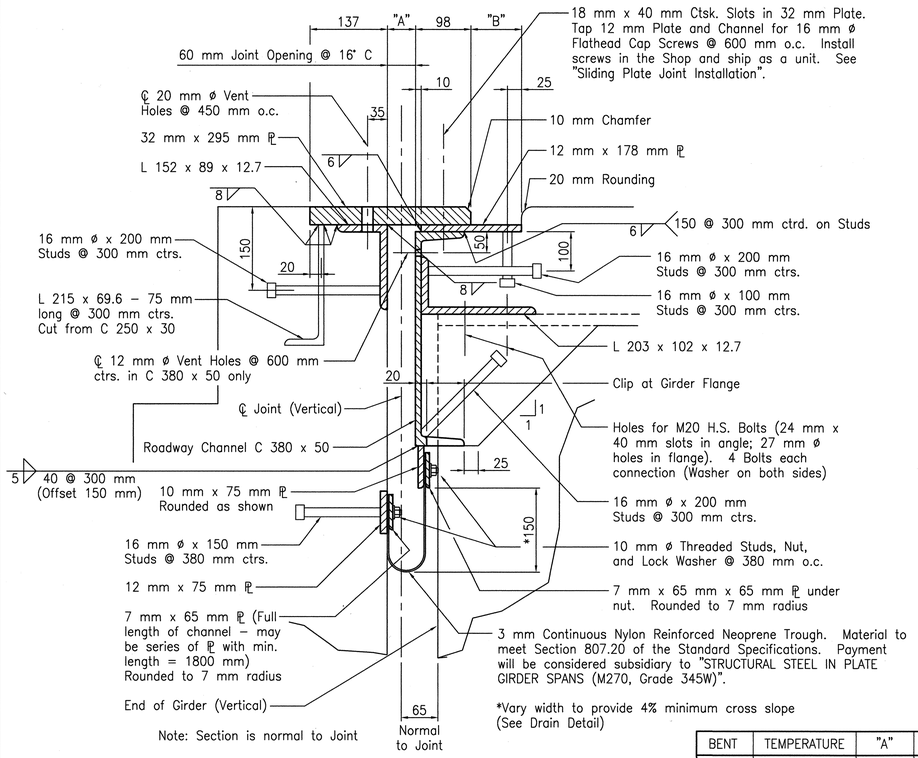

DETAIL OF SLIDING PLATE JOINT
N.T.S.

BENT	TEMPERATURE	"A"	"B"
1 & 5	26° C	48	78
	16° C	60	90
	4° C	72	102

SLIDING PLATE JOINT INSTALLATION

The concrete span pour adjacent to the sliding plate joint shall be placed before the end bent backwall concrete is placed. The joint assembly shall be installed on the girders, adjusted for grade, and the bolts fully tightened prior to placing the adjacent span concrete pour. Immediately prior to pouring the backwall concrete supporting the sliding plate joint, the shipping screws shall be removed, the joint opening shall be adjusted for temperature, and the backwall constructed.

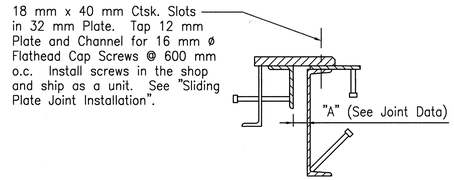

DETAIL FOR BLOCKING EXPANSION JOINT DEVICE
N.T.S.

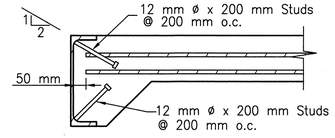

Note: As an alternate to 16 mm ø studs, 12 mm ø x 200 mm studs spaced as shown may be used. Use Weight of 16 mm ø stud as basis of measurement of structural steel in anchors.

DETAILS OF ALTERNATE ANCHORS
N.T.S.

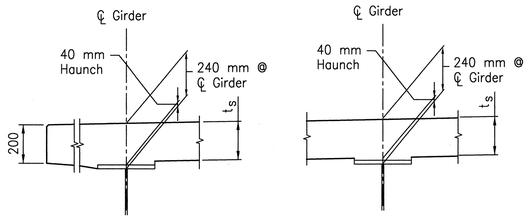

EXTERIOR GIRDER
INTERIOR GIRDER

Note:
t_s = Slab Thickness as detailed on Typical Roadway Section. Tolerance is minus 6 mm and plus 12 mm.
Haunch Forming is required, and shall be adjusted to maintain slab tolerance.
No increase in concrete and structural steel quantities will be made to meet slab tolerance.

ADJUSTMENT FOR SLAB THICKNESS TOLERANCE WHEN REMOVABLE DECK FORMING IS USED
N.T.S.

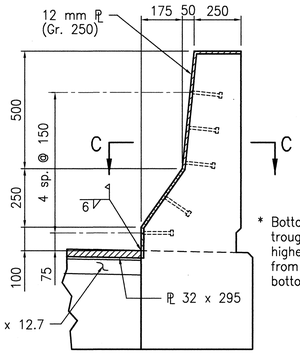

* Bottom of neoprene trough should be no higher than 50 mm from inside channel bottom.

VIEW D–D
N.T.S.

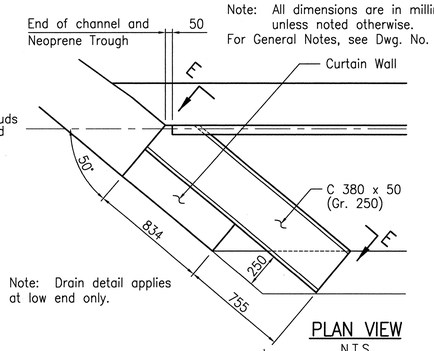

Note: Drain detail applies at low end only.

PLAN VIEW
N.T.S.

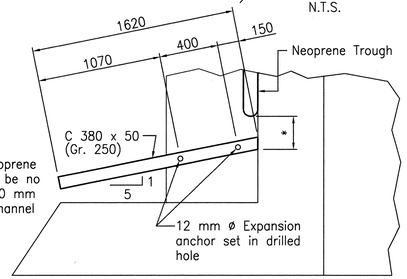

VIEW E–E
N.T.S.

DRAIN DETAILS

After neoprene trough is installed, drains are to be installed on Bents 1 & 5 on low side of bents shown on Dwg. No's. 40290 & 40291. Drains shall be M270, Grade 250 Structural Steel and shall be hot-dipped galvanized after fabrication in accordance with AASHTO M 232. Drains shall be measured and paid for as "Structural Steel in Plate Girder Spans (M270, Gr. 345W)". Galvanizing will not be paid for directly but will be considered subsidiary to the item of "Structural Steel in Plate Girder Spans (M270, Gr. 345W)". Anchors & installation will not be paid for directly but will be considered subsidiary to the item of "Structural Steel in Plate Girder Spans (M270, Gr. 345W)".

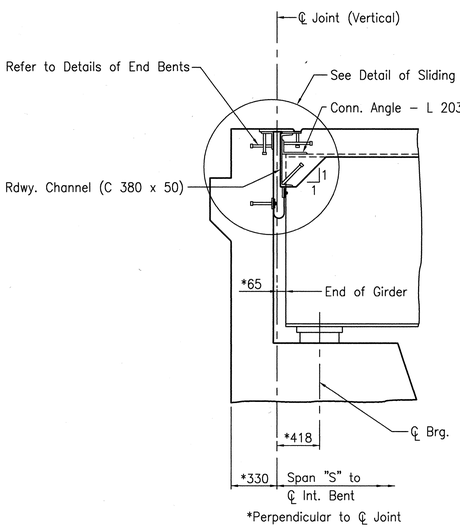

SECTION THRU JOINT AT END BENTS
N.T.S.

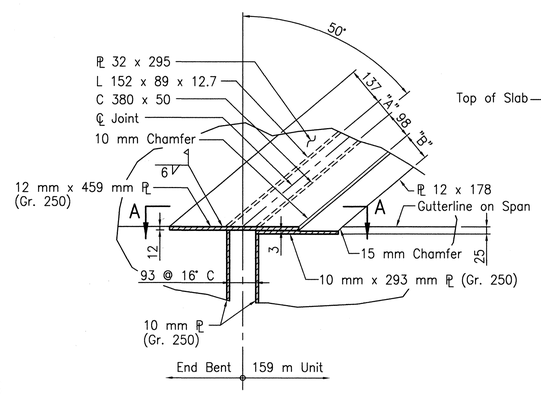

PLAN OF JOINT AT CURB
N.T.S.

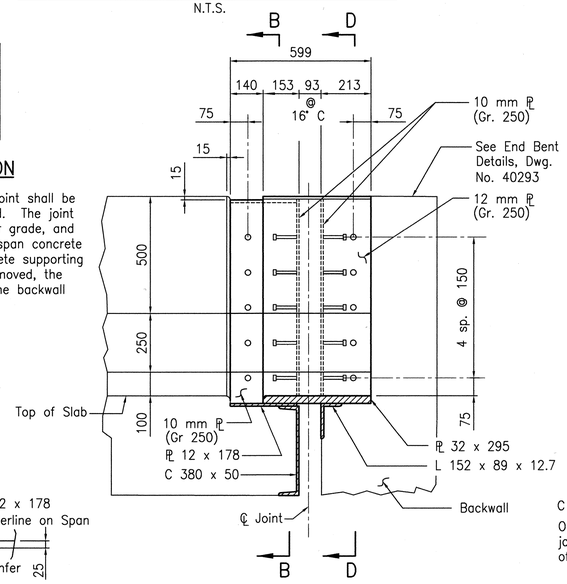

VIEW A–A
N.T.S.

Notes:

All dimensions are in millimeters unless otherwise noted.

All structural steel in Sliding Plate Joint shall be AASHTO M 270, Grade 345W, unless otherwise noted. All exposed surfaces to be cleaned in accordance with subsection 807.84 of the Standard Specifications. AASHTO M270, Grade 250 Structural Steel in parapets shall be painted in accordance with subsection 638. Structural steel completely embedded in concrete may not be painted.

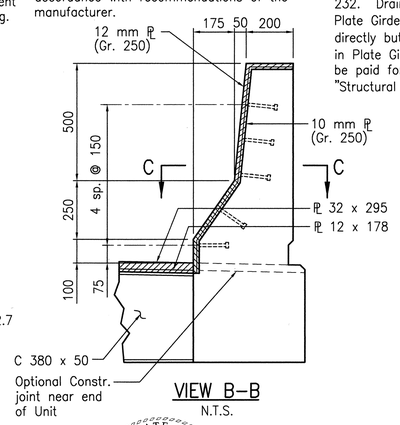

VIEW B–B
N.T.S.

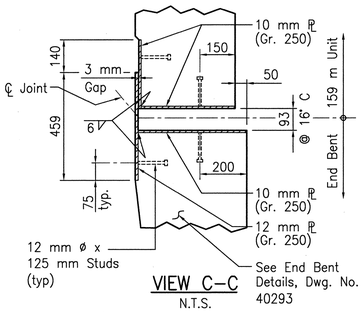

VIEW C–C
N.T.S.

STATE OF ARKANSAS
Marc T. Barry
REGISTERED PROFESSIONAL ENGINEER
No. 10204
08-02-00
MARC T. BARRY

BRIDGE ENGINEER

SHEET 5 OF 7
DETAILS OF 159 m CONT. COMP. PLATE GIRDER UNIT
CR20/26 OVER US71
MILLER COUNTY
US71
ARKANSAS STATE HIGHWAY COMMISSION
LITTLE ROCK, ARKANSAS

DRAWN BY: JFS DATE: 08-02-00
CHECKED BY: MTB/WMG DATE: 08-02-00
DESIGNED BY: MTB DATE: 08-02-00
BRIDGE NO. 06786
DRAWING NO. 40301
SCALE: 1:20 (OR AS NOTED) METRIC

MICROFILMED
AUG 28 2000

DATE REVISED	DATE FILMED	DATE REVISED	DATE FILMED

FED. ROAD DIST. NO.	STATE	FED. AID PROJ. NO.	SHEET NO.	TOTAL SHEETS
6	ARK			
JOB NO.		R30095	179	541
1 06786		SPAN DETAILS		40302

Note: All dimensions are in millimeters (mm) unless noted otherwise.
For General Notes, see Dwg. No. 40249

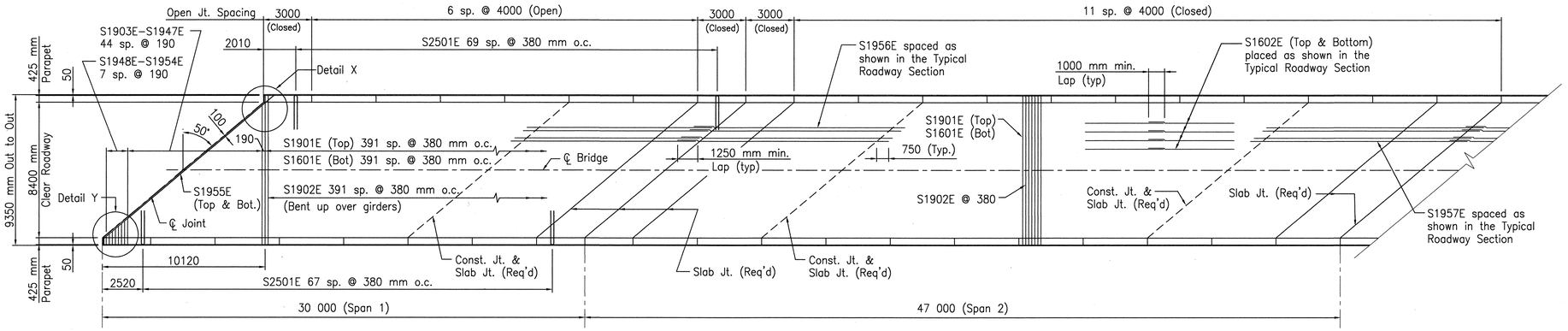

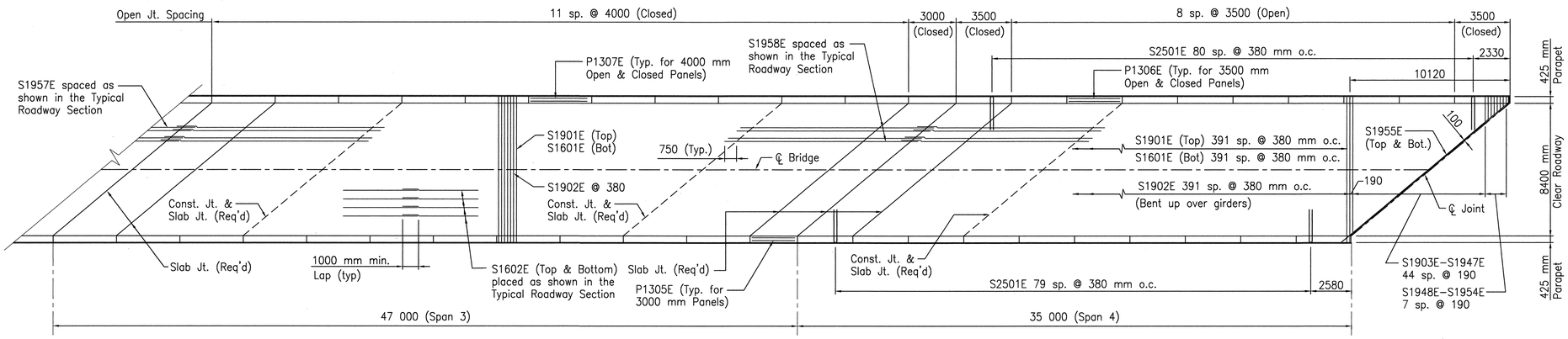

REINFORCING PLAN
N.T.S.

Note:
Open or Closed Parapets are typical on each side of bridge except where noted.

Note:
#16 Bar shall have a typical min. lap of 1000 mm.
#19 Bar shall have a typical min. lap of 1250 mm.

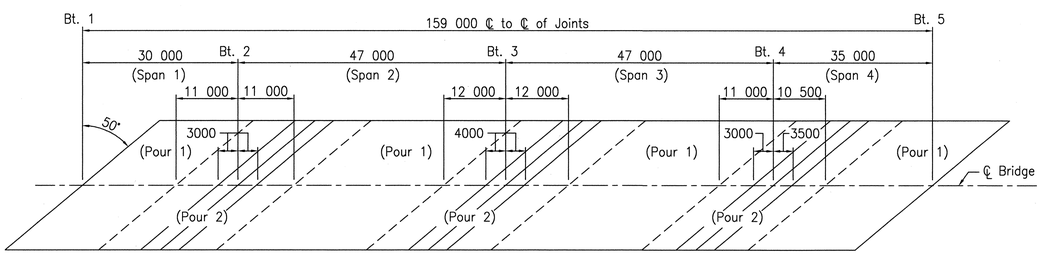

POURING SEQUENCE
N.T.S.

Note:
Pours with the same number may be placed simultaneously or separately. All pours (1) must be placed before pours (2) can be placed. Forty-eight (48) hours shall elapse between the end of a pour and the start of the next pour. Seventy-two (72) hours shall elapse between the end of a pour and the start of an adjacent pour. Any railing pours made before the slab unit has been placed must be approved by the Bridge Engineer. Concrete in bridge superstructure shall be consolidated for the entire pour before any concrete has taken its initial set. This may require the use of a retarding agent. The contractor must obtain approval from the Bridge Engineer for any deviations from the pouring sequence shown.

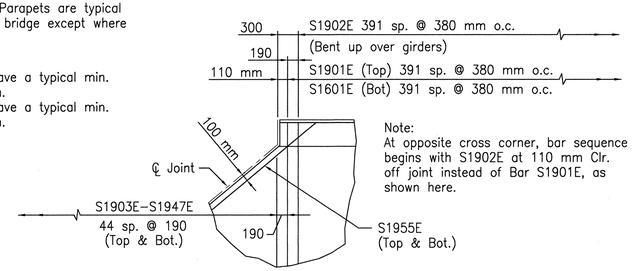

Note:
At opposite cross corner, bar sequence begins with S1902E at 110 mm Clr. off joint instead of Bar S1901E, as shown here.

DETAIL X
1:50

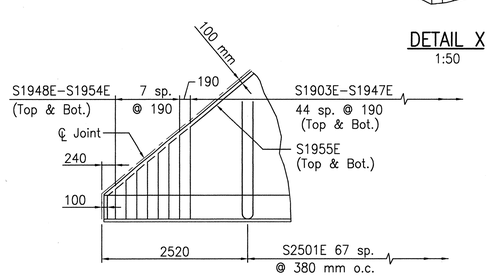

DETAIL Y
1:50

BAR LIST–PER UNIT

Mark	No. Req'd	Length	A	B	Pin Dia.
S1601E	392	9250			Str
S1602E	680	16 800			Str
S1901E	392	9250			Str
S1902E	392	9520			114
S1903E–S1947E	4 ea.	Var. 8630 to 1610			Str
S1948E–S1954E	4 ea.	Var. 1750 to 800	Var. 1450 to 300	300	114
S1955E	4	14 180	13 800	380	114
S1956E	80	11 680			Str
S1957E	80	13 630			Str
S1958E	80	11 880			Str
S2501E	299	4340			152
*P1301E	1404	1920			50
*P1302E	1068	1670			50
*P1303E	288	1770			50
*P1304E	288	920			50
*P1305E	48	2900			Str
*P1306E	88	3400			Str
*P1307E	312	3900			Str
*P1601E	336	1710			63
*P1901E	64	3400			Str
*P1902E	48	3900			Str

BENDING DIAGRAMS

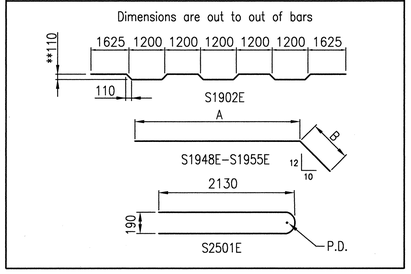

E – Denotes Epoxy Coated Bar
* For Bending Diagrams See Dwg. No. 40303
**12 mm Overtolerance, No Undertolerance.

MICROFILMED
AUG 28 2000

STATE OF ARKANSAS
Marc Barry
REGISTERED PROFESSIONAL ENGINEER
No. 10204
08-02-00
MARC T. BARRY

BRIDGE ENGINEER

SHEET 6 OF 7
DETAILS OF 159 m CONT. COMP. PLATE GIRDER UNIT
CR20/26 OVER US71
MILLER COUNTY
US71
ARKANSAS STATE HIGHWAY COMMISSION
LITTLE ROCK, ARKANSAS

DRAWN BY: JFS DATE: 08–02–00
CHECKED BY: MTB/WMG DATE: 08–02–00
DESIGNED BY: MTB DATE: 08–02–00
BRIDGE NO. 06786 DRAWING NO. 40302
SCALE: 1:50 (OR AS NOTED) METRIC

DATE REVISED	DATE FILMED	DATE REVISED	DATE FILMED

FED. ROAD DIST. NO.	STATE	FED. AID PROJ. NO.	SHEET NO.	TOTAL SHEETS
6	ARK			
JOB NO.		R30095	180	541
1 06786	SPAN DETAILS		40303	

Note: All dimensions are in millimeters (mm) unless noted otherwise.
For General Notes, see Dwg. No. 40249

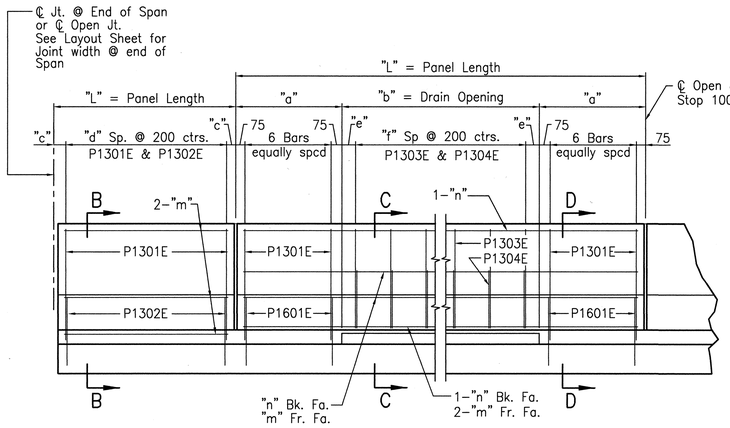

PARAPET RAIL ELEVATION
1:20

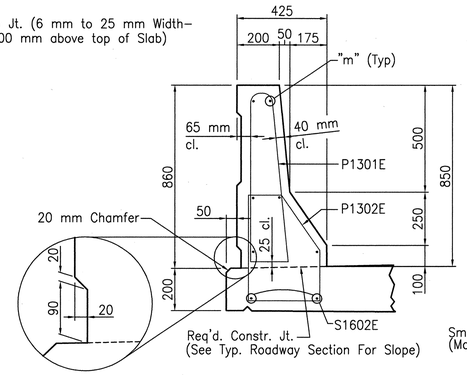

SECTION B–B
1:30

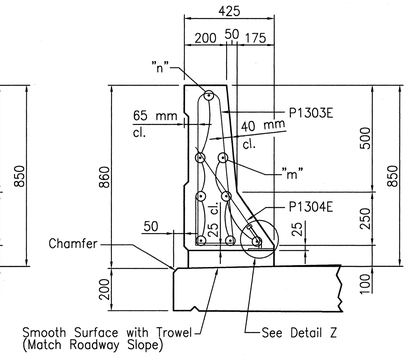

SECTION C–C
1:30

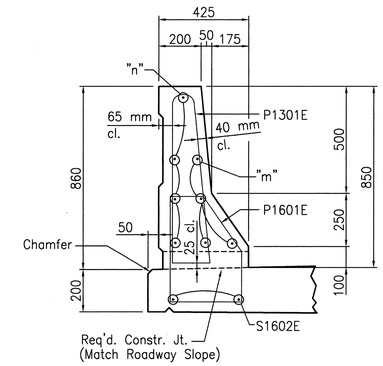

SECTION D–D
1:30

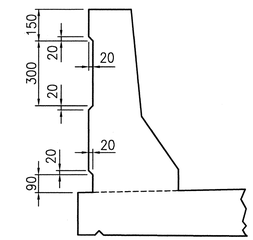

SECTION Y–Y
1:30

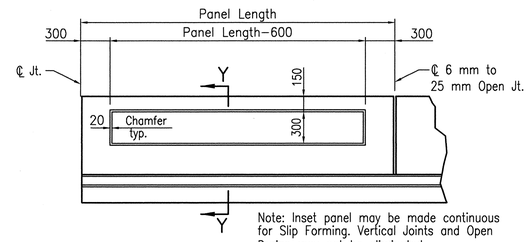

Note: Inset panel may be made continuous for Slip Forming. Vertical Joints and Open Drains may not be eliminated.

DETAILS OF PARAPET ENHANCEMENT
N.T.S.

PARAPET RAIL VARIABLES

Panel Length "L"	Panel Type	"a"	"b"	"c"	"d"	"e"	"f"	"m"	"n"
3000	Closed	—	—	100	14	—	—	P1305E	—
3500	Closed	—	—	150	16	—	—	P1306E	—
3500	Open	800	1800	—	—	100	8	P1306E	P1901E
4000	Closed	—	—	100	19	—	—	P1307E	—
4000	Open	800	2400	—	—	100	11	P1307E	P1902E

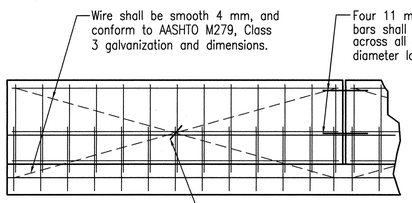

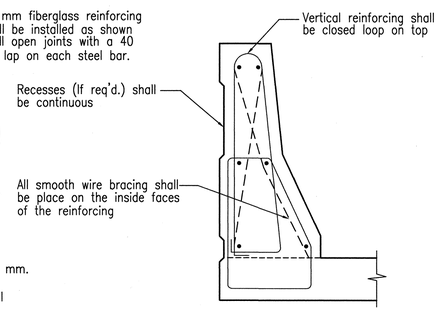

All panels shall be braced as shown to prevent racking. All open joints shall be sawed as soon as practical to a minimum width of 6 mm. To control cracking before sawing, all joints must be grooved before the concrete is set. Sawing of the joints must be controlled so it will follow the grooved joint.

DETAIL OF OPTIONAL SLIPFORMING OF CONCRETE PARAPET RAIL (OPEN OR CLOSED)
N.T.S.

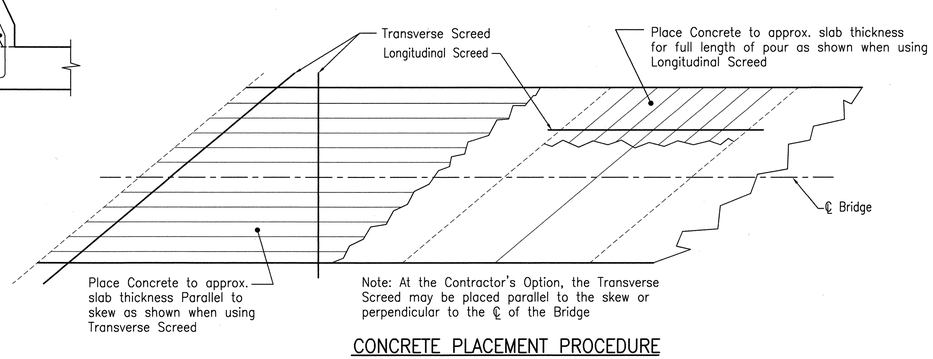

CONCRETE PLACEMENT PROCEDURE
N.T.S.

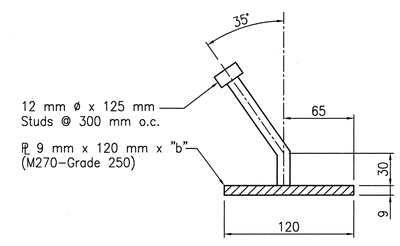

DETAIL Z
N.T.S.

Note:
Parapet Studs shall be 125 mm long, granular flux filled, solid fluxed, or equal, and automatically end welded to the plate. Studs and plate shall meet the requirements of Section 807. Studs and plate shall be measured and paid for as "Structural Steel in Plate Girder Spans (M270–Gr. 345W). The surfaces of the 9 mm Plate which will not be in contact with concrete shall be painted in accordance with Section 638.

Note:
Painting will not be paid for directly but will be included in the item for structural steel.

Bending Diagrams
(Dimensions are out to out of bars.)

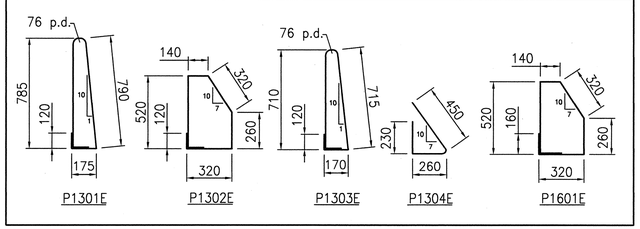

Note: All Bars designated with an "E" suffix are to be Epoxy Coated.
* For Bar List See Dwg. No. 40302

BENDING DIAGRAM – PARAPET BARS
N.T.S.

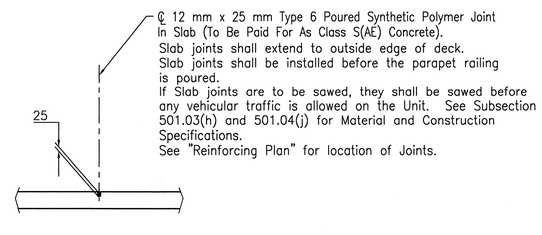

SLAB JOINT DETAIL
N.T.S.

MICROFILMED
AUG 28 2000

STATE OF ARKANSAS
REGISTERED PROFESSIONAL ENGINEER
No. 10204
08-02-00
MARC T. BARTEY

BRIDGE ENGINEER

SHEET 7 OF 7
DETAILS OF 159 m CONT. COMP. PLATE GIRDER UNIT
CR20/26 OVER US71
MILLER COUNTY
US71
ARKANSAS STATE HIGHWAY COMMISSION
LITTLE ROCK, ARKANSAS

DRAWN BY: JFS DATE: 08-02-00
CHECKED BY: MTB/WMG DATE: 08-02-00
DESIGNED BY: MTB DATE: 08-02-00
BRIDGE NO. 06786
SCALE: 1:20 (OR AS NOTED) METRIC
DRAWING NO. 40303