DATE REVISED	DATE FILMED	DATE REVISED	DATE FILMED	FED. RD. DIST. NO.	STATE	FED AID PROJ NO.	SHEET NO.	TOTAL SHEETS
				6	ARK			
				JOB NO.		SA6030	5	39
				(1) 4761		QUANTITIES		36392

SCHEDULE OF BRIDGE QUANTITIES – JOB No. SA6030

BRIDGE NO.	CODE NO.	NAME PLATE TITLE	UNIT OF STRUCTURE	ITEM NO.	205	801	SS & 802	SS & 802	803	SS & 804	807	809	812	816	816
				ITEM	REMOVAL OF EXISTING BRIDGE STRUCTURE – SITE 1	UNCLASSIFIED EXCAVATION FOR STRUCTURES BRIDGE	CLASS S CONCRETE **BRIDGE**	CLASS S(AE) CONCRETE **BRIDGE**	BOILED LINSEED OIL	REINFORCING STEEL (GRADE 60) **BRIDGE**	STRUCTURAL STEEL IN BEAM SPANS (A588)	PREFORMED JOINT SEAL	BRIDGE NAME PLATE (TYPE C)	FILTER BLANKET	DUMPED RIPRAP
				UNIT	LUMP SUM	CU. YD.	CU. YD.	CU. YD.	GAL.	LB.	LB.	LIN. FT.	EACH	SQ. YD.	CU. YD.
4761	X071	FOURCHE CREEK													
			END BENT NO. 1			81	41.1		0.2	5,537	598		1	356	178
			BENT NOS. 2 & 3			32	57.9			8,852					
			END BENT NO. 4			57	35.7		0.2	5,138	598			266	133
			THREE 40'-0" COMP. W-BM. SPANS					137.60	3.8	25,365	66,731				
			EXISTING BRIDGE (BR. NO. 16475)		1.0							182			
TOTAL FOR BRIDGE NO. 4761					1.0	170	131.2	137.60	4.2	44,210	67,927	182	1	622	311

NOT TO SCALE

STATE OF ARKANSAS
REGISTERED PROFESSIONAL ENGINEER
No. 7041
TODD ROBBINS
3-6-95

SCHEDULE OF BRIDGE QUANTITIES
FOURCHE CREEK STR. & APPR.
PULASKI COUNTY
CO. ROUTE 26 SEC.
ARKANSAS STATE HIGHWAY COMMISSION

PROJECT:
DRAWN BY: C.H. DATE: 22 FEB 95
CHECKED BY: K.J. DATE: 27 FEB 95
DESIGNED BY: T.R. DATE: 22 FEB 95
SCALE: 1/4" = 1'-0"
FILENAME: 33146.DWG
TITLE:
BRIDGE NO. 4761 DRAWING NO. 36392

Microfilmed
JUL 31 1995

DATE REVISED	DATE FILMED	DATE REVISED	DATE FILMED	FED. ROAD DIST. NO.	STATE	FED. AID PROJ. NO.	SHEET NO.	TOTAL SHEETS
				6	ARK			
				JOB. NO.		SA6030	8	39
				1	4761	LAYOUT		36393

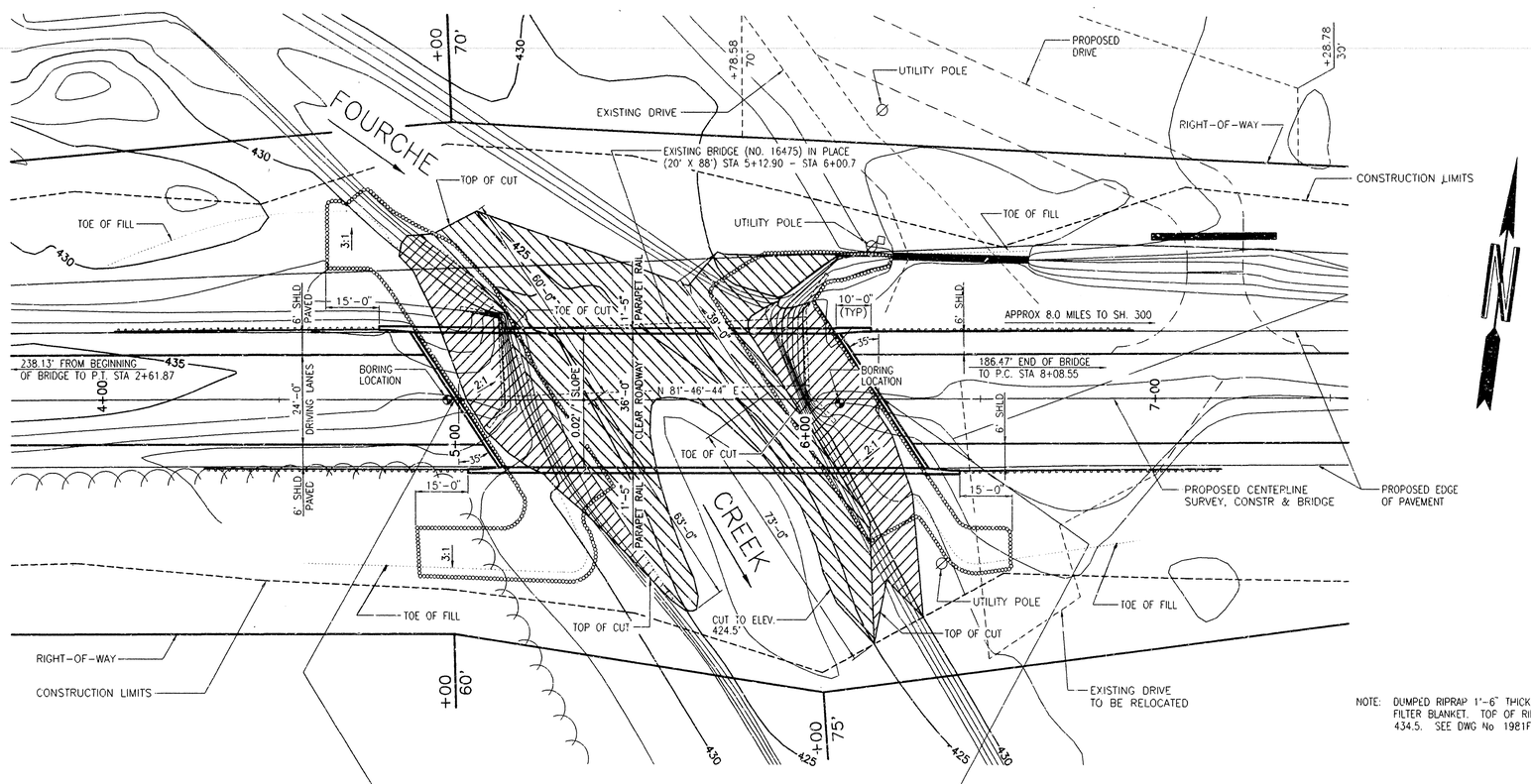

BORING LEGEND

A- (FILL) GRAVEL & SILTY SAND
B- (FILL) MEDIUM DENSE WEATHERED SHALE & SILTY CLAY
C- SOFT BROWN & GRAY SILTY CLAY w/ WOOD
D- SOFT TO MEDIUM HARD DARK GRAY WEATHERED SHALE w/ FERROUS STAINS
E- (FILL) SOFT TO STIFF BROWN CLAYEY SHALE, SILTY FINE SAND, SILTY CLAY, GRAVEL & QUARTZ
F- MEDIUM DENSE BROWN SILTY MEDIUM SAND

PLAN

SCALE: 1"=20'-0"

NOTE: USE TYPE "A" APPROACH GUTTERS AT EACH END OF BRIDGE. SEE DWG No. 2016A

NOTE: EXCAVATE CHANNEL AS SHOWN TO ELEVATION SHOWN. APPROX 319 CUBIC YARDS OF CHANNEL EXCAVATION REQ'D.

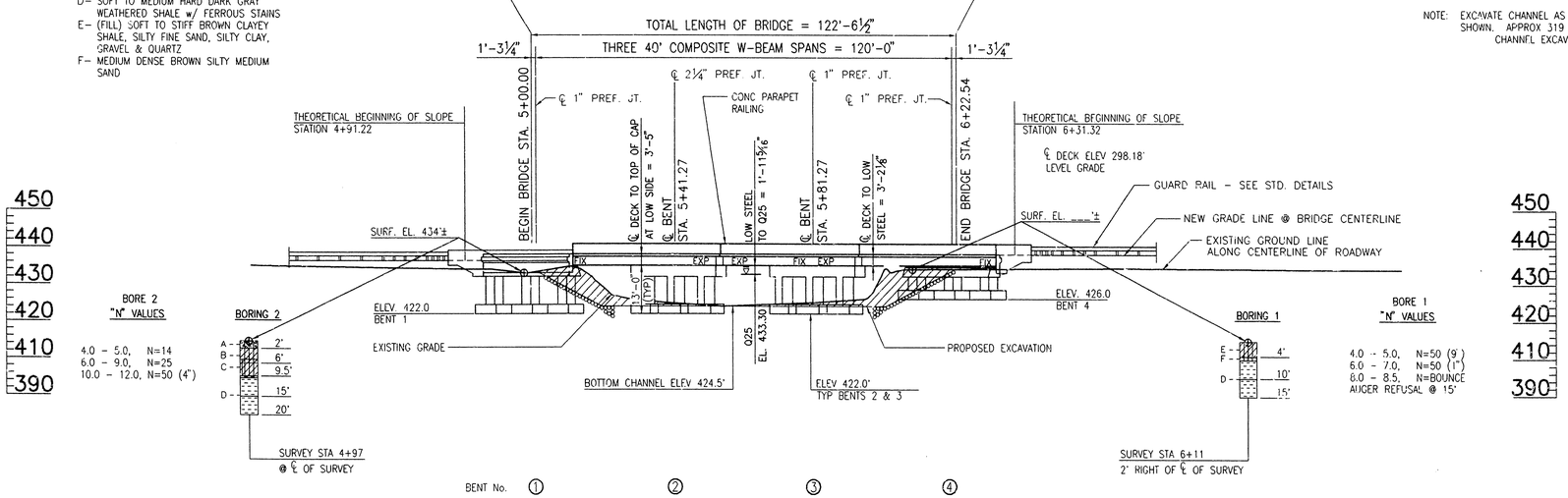

ELEVATION

SCALE: 1"=20'-0" (HORIZ. & VERT.)

GENERAL NOTES

BENCH MARK #1: C.P.S. IN POWER POLE 39.0' LEFT OF STA 51+92, ELEV. 226.55'. CHISELLD SQUARE ON NORTHEAST WING WALL ON LAWSON ROAD BRIDGE OVER FOURCHE CREEK.

CONSTRUCTION SPECIFICATIONS: ARKANSAS STATE HIGHWAY AND TRANSPORTATION DEPARTMENT STANDARD SPECIFICATIONS FOR HIGHWAY CONSTRUCTION, 1993 EDITION, WITH APPLICABLE SUPPLEMENTAL SPECIFICATIONS AND SPECIAL PROVISIONS.

DESIGN SPECIFICATIONS: AASHTO STANDARD SPECIFICATIONS FOR HIGHWAY BRIDGES, 1992 EDITION WITH CURRENT INTERIM SPECIFICATIONS.

LIVE LOADING: HS20 METHOD OF DESIGN: LOAD FACTOR
SEISMIC PERFORMANCE CATEGORY: A

MATERIALS AND STRENGTHS:

CLASS S(AE) CONCRETE (SUPERSTRUCTURE)	f'c = 4,000 PSI
CLASS S CONCRETE (SUBSTRUCTURE)	f'c = 3,500 PSI
REINFORCING STEEL (A615 OR A617, GR. 60)	Fy = 60,000 PSI
STRUCTURAL STEEL (A588)	Fy = 50,000 PSI
STRUCTURAL STEEL (A36)	Fy = 36,000 PSI

BORING LOGS: BORING LOGS MAY BE OBTAINED FROM THE PROGRAMS AND CONTRACTS DIVISION.

FOOTINGS: FOOTINGS SHALL BE SET A MINIMUM OF 2'-0" INTO MATERIAL DESIGNATED AS "D - SOFT TO MEDIUM HARD DARK GRAY WEATHERED SHALE" ON THE BORING LEGEND. THE TOP OF THE INTERMEDIATE BENT FOOTINGS SHALL BE SET AT OR BELOW THE CHANNEL BOTTOM. FOUNDATIONS FOR FOOTINGS SHALL BE PREPARED IN ACCORDANCE WITH SECTION 801.04 OF THE STANDARD SPECIFICATIONS. ROCK EXCAVATIONS SHALL BE MADE TO NEAT LINES OF THE CONCRETE FOOTINGS. CARE SHALL BE EXERCISED TO AVOID SHATTERING OF ROCK FACES BY EXCESSIVE BLASTING. CONCRETE IN FOOTINGS SHALL BE POURED DIRECTLY AGAINST EXCAVATED SURFACES OF ROCK.

BRIDGE DECK: THE CONCRETE BRIDGE DECK SHALL BE GIVEN A TINE FINISH AS SPECIFIED FOR FINAL FINISHING IN SUBSECTION 802.20 FOR CLASS 5 BRIDGE ROADWAY SURFACE FINISH.

BOILED LINSEED OIL: BOILED LINSEED OIL TREATMENT SHALL BE APPLIED TO THE ROADWAY SURFACE AND TO THE FACE AND TOP OF THE CONCRETE PARAPET RAIL.

DETAIL DRAWINGS:

	DRAWING NO.
END BENTS	36394,36395
INTERMEDIATE BENTS	36396
W-BEAM SPANS	36397,36398
TYPE E-3 SHOES	14990H
PERMANENT STEEL BRIDGE DECK FORMS	14991
TYPE C BRIDGE NAME PLATE	2389A
EMBANKMENT CONSTRUCTION	1888A
DUMPED RIPRAP AND FILTER BLANKET	1891F
COMPUTING EXCAVATION FOR STRUCTURES	1891F
TYPE A APPROACH GUTTERS	2016A

EXISTING BRIDGE: EXISTING BRIDGE (NO. 16475) IS 20' WIDE BY 88' LONG CONSISTING OF THREE SPANS (CONCRETE DECK ON STEEL I-BEAMS) WITH CONCRETE BENT CAPS AND STRUCTURE.

REMOVAL AND SALVAGE: THE EXISTING BRIDGE SHALL BE REMOVED IN ACCORDANCE WITH SECTION 205 OF THE STANDARD SPECIFICATIONS. ALL MATERIAL FROM THE EXISTING BRIDGE SHALL BECOME THE PROPERTY OF THE CONTRACTOR.

MAINTENANCE OF TRAFFIC: THE ROAD WILL BE CLOSED DURING CONSTRUCTION OF THIS PROJECT.

HYDRAULIC DATA

DRAINAGE AREA = 8.8 SQ. MILIES

FLOOD	FREQUENCY	DISCHARGE	NATURAL WATER SURFACE ELEVATION	WATER SURFACE ELEVATION WITH BACKWATER
DESCRIPTION	YEARS	CFS	FEET	FEET
DESIGN	25	6350	433.30	433.39
BASE	100	7900	433.37	433.57
EXTREME	500	11066	433.41	434.62

REMARKS:
1. HISTORICAL HIGHWATER ELEV. = N.A.
2. LOW BRIDGE MEMBER ELEV. = 435.24
3. NO OVERTOPPING OF ROAD OCCURS @ Q500.
4. BACKWATER ELEVATIONS AT UPSTREAM SIDE OF BRIDGE = 433.57 (Q100)

LAYOUT OF BRIDGE OVER FOURCHE CREEK
FOURCHE CREEK STR. & APPR.
PULASKI COUNTY

STATE OF ARKANSAS REGISTERED PROFESSIONAL ENGINEER No. 7041 TODD ROBBINS 3-9-95

CO. ROUTE 26 SEC.

ARKANSAS STATE HIGHWAY COMMISSION

PROJECT:
DRAWN BY: C.H. DATE: 22 FEB 95
CHECKED BY: K.J. DATE: 27 FEB 95
DESIGNED BY: T.R. DATE: 22 FEB 95
TITLE:

SCALE: 1" = 20'
FILENAME: 392-1SFIA.DWG

BRIDGE NO. 4761 DRAWING NO. 36393

DATE REVISED	DATE FILMED	DATE REVISED	DATE FILMED	FED. RD. DIST. NO.	STATE	FED AID PROJ NO.	SHEET NO.	TOTAL SHEETS
				6	ARK			
				JOB NO.		SA6030	9	39
				(1) 4761		END BENTS		36394

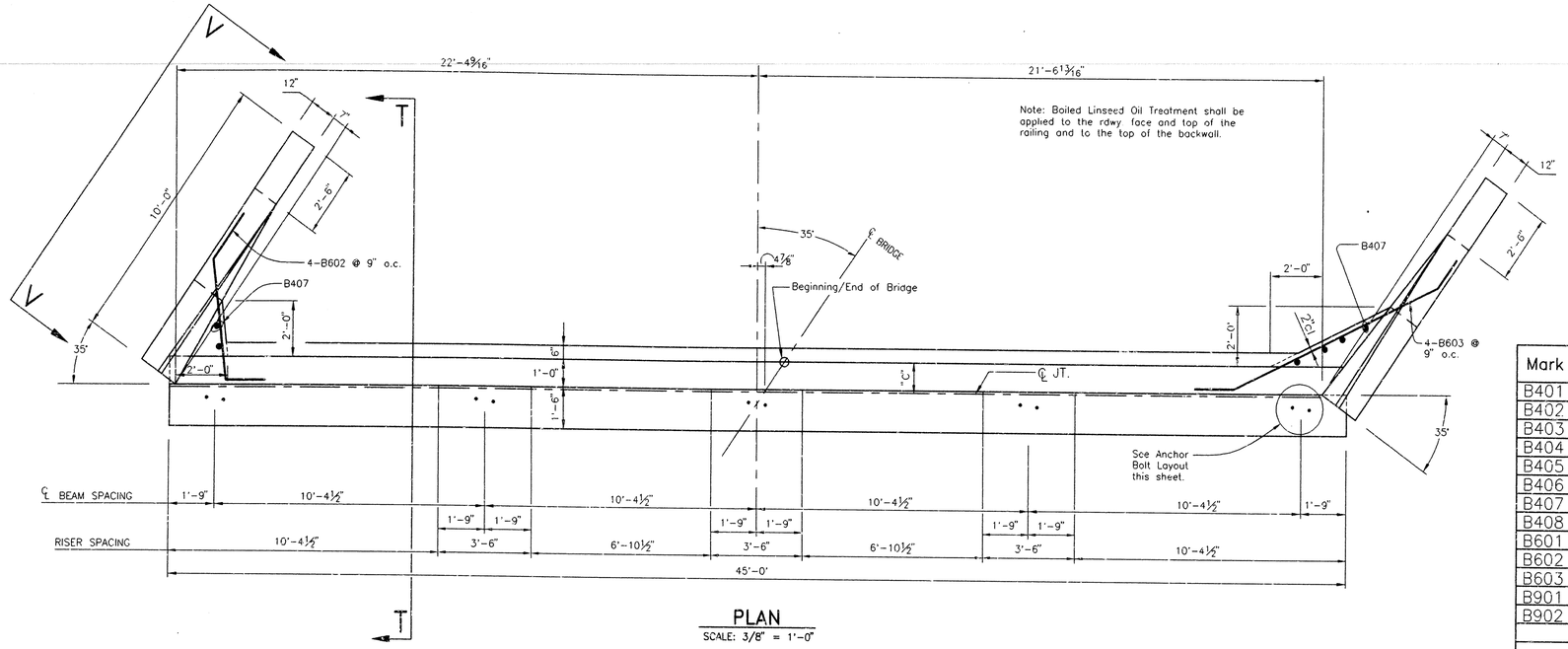

PLAN

SCALE: 3/8" = 1'-0"

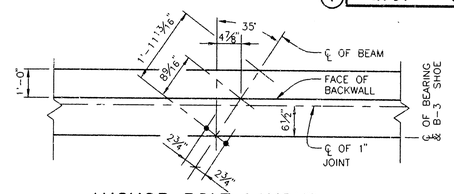

ANCHOR BOLT LAYOUT

SCALE: 3/8" = 1'-0"

BAR LIST

Mark	NO. REQ'D	Length	Pin Dia.
B401	9	6'-4"	2"
B402	64	7'-10"	2"
B403	20	9'-6"	2"
B404	82	"a" + 1'-6"	STR
B405	41	3'-11"	2"
B406	16	23'-4"	STR
B407	6	"h" + 1'-2"	STR
B408	8	22'-10"	STR
B601	8	"a" + 1'-10"	STR
B602	4	6'-4"	4½"
B603	4	10'-7"	4½"
B901	4	47'-2"	9"
B902	4	44'-8"	STR
C401-C40"g"	3 EA.	VARIES 8'-10½" TO "p"	2"
C801	36	"l"	6"
F501	33	"n"	3¾"
F502	33	6'-8"	3¾"
R401	8	3'-11"	2"
R402	8	4'-0"	2"
R403	12	9'-8"	STR
R601	16	4'-5"	STR
R602	6	5'-0"	STR
W401	6	"h" + 1'-2"	2"
W402	6	"h" + 2'-5"	STR
W403-W407	2 ea.	Var. 3'-5" to 5'-5"	2"
W408-W412	2 ea.	Var. 4'-6" to 6'-6"	STR
W413	4	7'-11"	2"
W701	12	9'-8"	STR
W702	4	6'-0"	STR
W703	4	4'-6"	STR
W704	4	8'-4"	5¼"

Bending Diagrams
(Dimensions are out to out of bars)

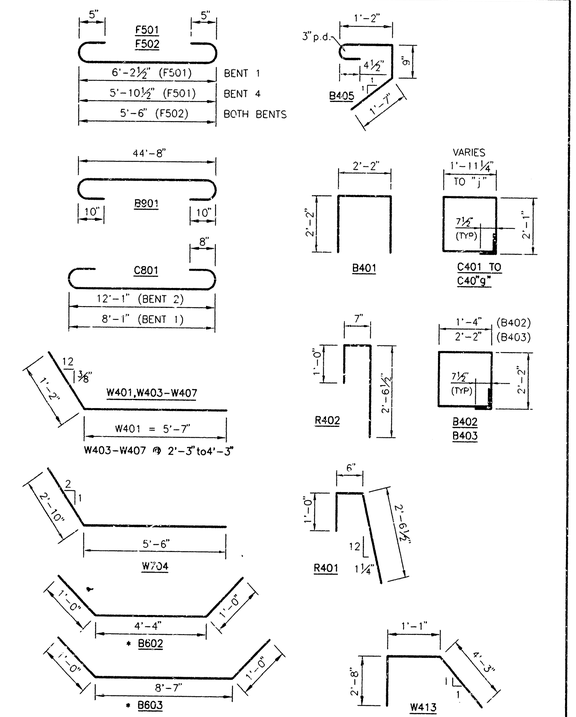

* ADJUST BEND IN FIELD

TABLE OF VARIABLES

Variable	END BENT NUMBER 1	4
"a"	3'-5"	3'-5"
"b"	6¾"	6¾"
"c"	1'-0½"	1'-0½"
"d"	8'-6"	4'-6"
"e"	3'-2½"	2'-10½"
"f"	6'-8½"	6'-4½"
"g"	9	5
"h"	5'-0"	5'-0"
"j"	2'-9¼"	2'-5¼"
"k"	9"	9"
"l"	13'-11"	9'-11"
"m"	3 5/16"	3 5/16"
"n"	7'-4½"	7'-0½"
"p"	10'-8"	10'-0"
Elev. "A"	438.42	438.42
Elev. "B"	435.00	435.00
Elev. "C"	422.00	426.00
Elev. "R"	438.06	438.06

Tabular Data By : TVR Date: 27 Dec 94
Checked By : KLJ Date: 27 Feb 95

ALL CONCRETE SHALL BE CLASS "S" AND BE POURED IN THE DRY, ALL EXPOSED CORNERS TO BE CHAMFERED ¾" UNLESS OTHERWISE NOTED.

ALL REINFORCING STEEL SHALL CONFORM TO ASTM A615 OR A617, GRADE 60.

BACKWALL SHALL NOT BE POURED BEFORE BEAMS ARE IN PLACE.

STRUCTURAL STEEL IN END BENTS SHALL BE ASTM A588 AND SHALL BE PAID FOR AS "STRUCTURAL STEEL IN BEAM BEAMS (A588)".

IF ANCHOR BOLTS ARE DRILLED INTO CAP, TOP REINFORCING BARS SHALL BE PROPERLY PLACED TO AVOID DAMAGE.

FOR ADDITIONAL INFORMATION, SEE LAYOUT.

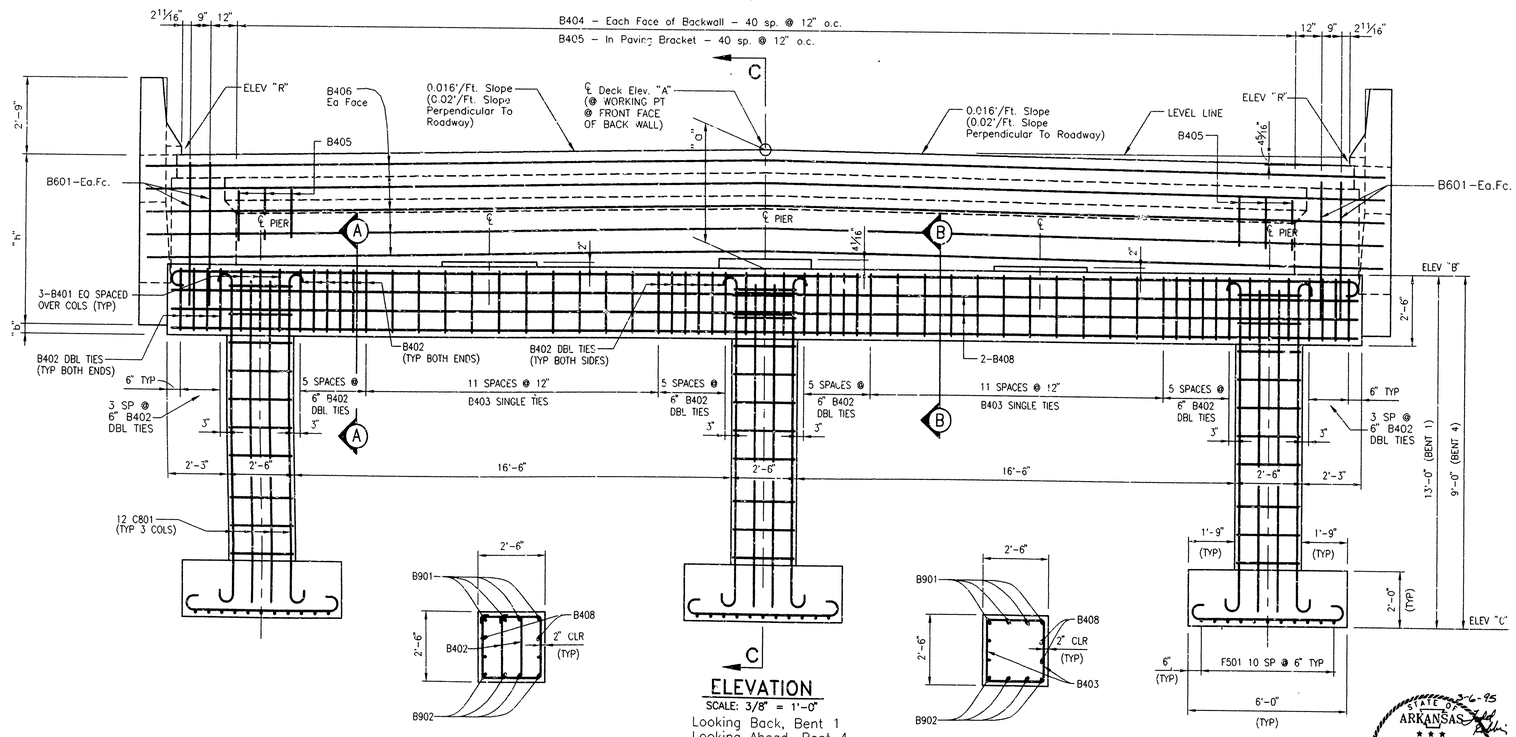

ELEVATION

SCALE: 3/8" = 1'-0"
Looking Back, Bent 1
Looking Ahead, Bent 4

SECTION A–A

SCALE: 3/8" = 1'-0"

SECTION B–B

SCALE: 3/8" = 1'-0"

STATE OF ARKANSAS REGISTERED PROFESSIONAL ENGINEER No. 7041 TODD ROBBINS 2-6-95

DETAILS OF END BENT No. 1 & 4
FOURCHE CREEK AT LAWSON ROAD
PULASKI COUNTY

CO. ROUTE 26 SEC.

ARKANSAS STATE HIGHWAY COMMISSION

DRAWN BY: C.H. DATE: 22 FEB 95
CHECKED BY: K.J DATE: 27 FEB 95
DESIGNED BY: T.R. DATE: 22 FEB 95

SCALE: AS NOTED
FILENAME: 33513.DWG

BRIDGE NO. 4761 DRAWING NO. 36394

JUL 3 1 1995

DATE REVISED	DATE FILMED	DATE REVISED	DATE FILMED	FED. RD. DIST. NO.	STATE	FED AID PROJ NO.	SHEET NO.	TOTAL SHEETS
				6	ARK			
				JOB NO.		SA6030	10	39
				(1) 4761		END BENTS		36395

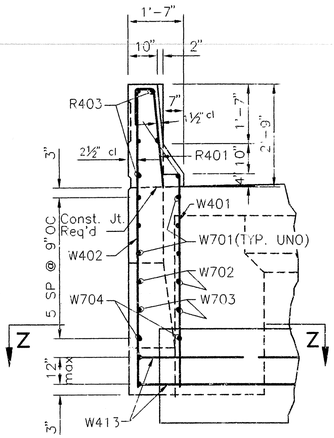

VIEW W – W
SCALE: 1/2" = 1'-0"

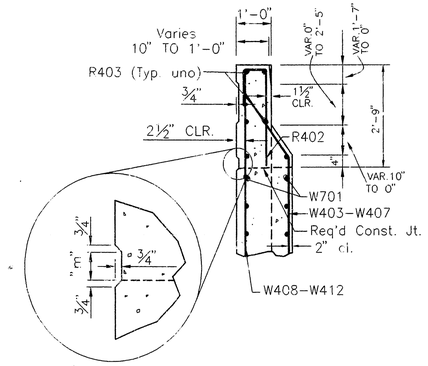

SECTION X – X
SCALE: 1/2" = 1'-0"

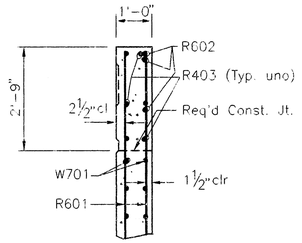

SECTION Y – Y
SCALE: 1/2" = 1'-0"

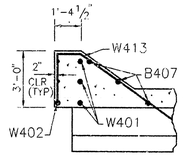

SECTION Z – Z
SCALE: 1/4" = 1'-0"

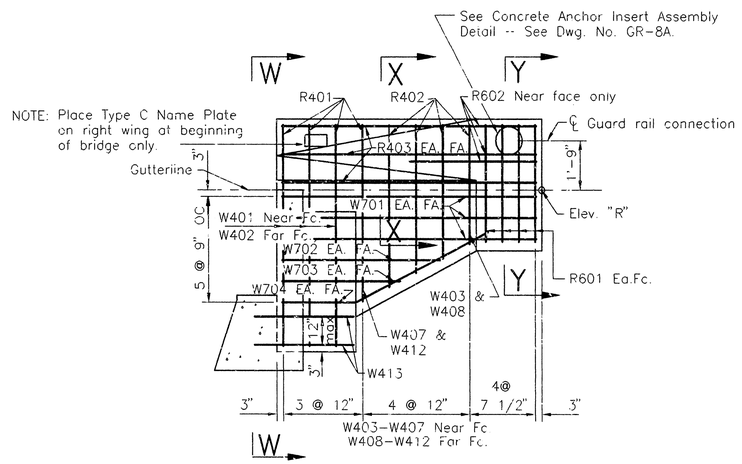

SECTION T – T
SCALE 3/8" = 1'-0"

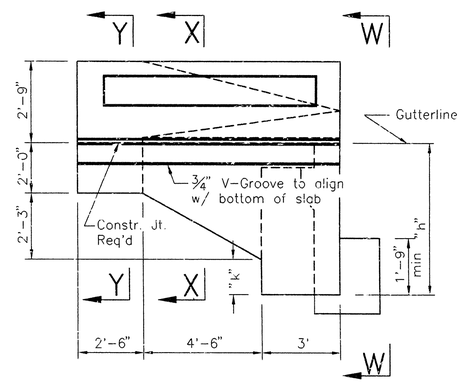

VIEW V – V
SCALE 3/8" = 1'-0"

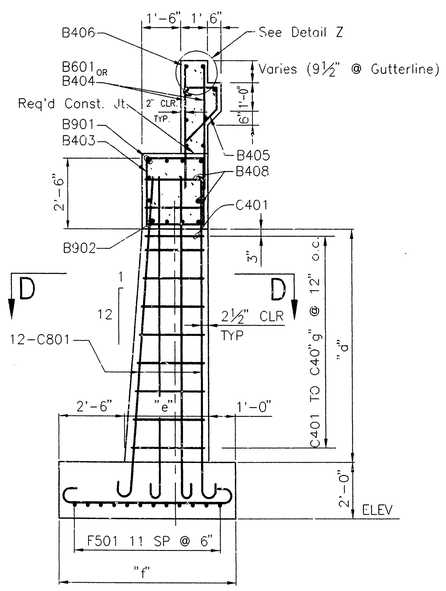

SECTION C–C
SCALE: 3/8" = 1'-0"

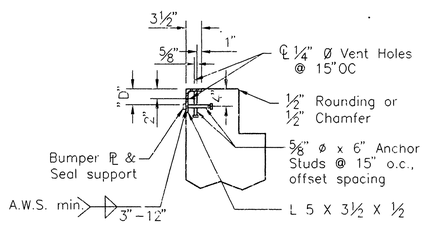

Note: For joint support details & dimension "D" see dwg. no. 14990H

DETAIL Z
SCALE: 3/4" = 1'-0"

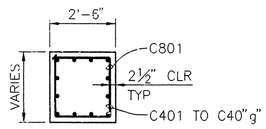

SECTION D–D
SCALE: 3/4" = 1'-0"

ALL CONCRETE SHALL BE CLASS "S" AND BE POURED IN THE DRY, ALL EXPOSED CORNERS TO BE CHAMFERED 3/4" UNLESS OTHERWISE NOTED.

ALL REINFORCING STEEL SHALL CONFORM TO ASTM A615 OR A617, GRADE 60.

BACKWALL SHALL NOT BE POURED BEFORE BEAMS ARE IN PLACE.

STRUCTURAL STEEL IN END BENTS SHALL BE ASTM A588 AND SHALL BE PAID FOR AS "STRUCTURAL STEEL IN BEAM BEAMS (A588)".

IF ANCHOR BOLTS ARE DRILLED INTO CAP, TOP REINFORCING BARS SHALL BE PROPERLY PLACED TO AVOID DAMAGE.

FOR ADDITIONAL INFORMATION, SEE LAYOUT.

DETAILS OF END BENT No. 1 & 4
FOURCHE CREEK AT LAWSON ROAD
PULASKI COUNTY
CO. ROUTE 26 SEC.
ARKANSAS STATE HIGHWAY COMMISSION

STATE OF ARKANSAS 2-27-95 REGISTERED PROFESSIONAL ENGINEER No.7041 TODD ROBBINS

DRAWN BY: C.H.	DATE: 22 FEB 95		
CHECKED BY: K.J.	DATE: 27 FEB 95	SCALE: AS NOTED	
DESIGNED BY: T.R.	DATE: 22 FEB 95	FILENAME: 33514.DWG	

BRIDGE NO. 4761 **DRAWING NO.** 36395

INCORPORATED JUL 3 1 1995

DATE REVISED	DATE FILMED	DATE REVISED	DATE FILMED	FED. RD. DIST. NO.	STATE	FED AID PROJ NO.	SHEET NO.	TOTAL SHEETS
				6	ARK			
				JOB NO.		SA6030	11	39
				(1) 4761	INTERMEDIATE BENTS 36396			

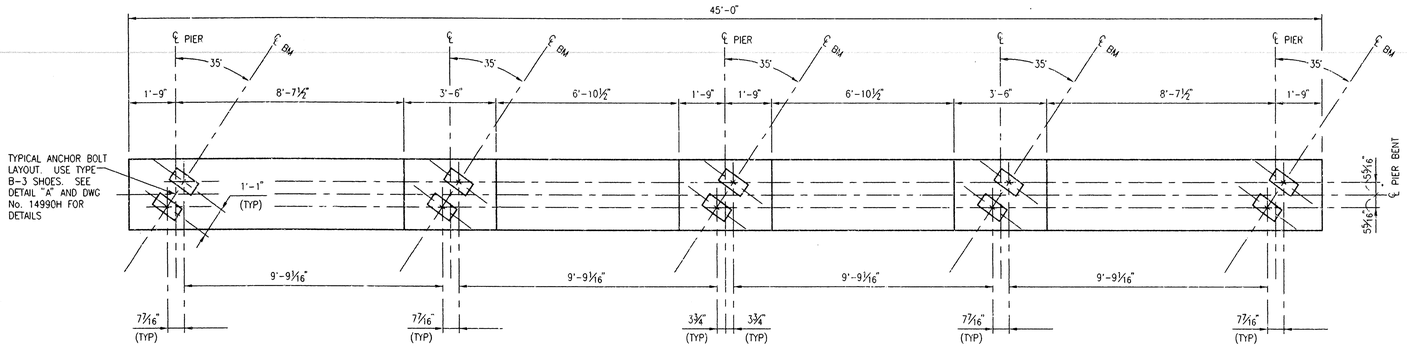

PLAN
SCALE: 3/8" = 1'-0"

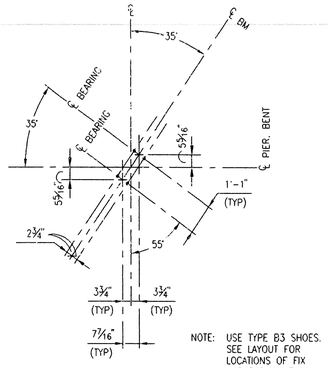

NOTE: USE TYPE B3 SHOES. SEE LAYOUT FOR LOCATIONS OF FIX AND EXP SHOES.

DETAIL A
TYPICAL ANCHOR BOLT DIAGRAM
SCALE: 3/8" = 1'-0"

BAR LIST

Mark	NO. REQ'D	Length	A	B	Pin Dia.
B401	20	22'-10"	–	–	STR
B402	64	9'-10"	1'-4"	3'-2"	2"
B403	20	11'-5"	2'-2"	3'-2"	2"
B404	9	8'-4"	2'-2"	3'-2"	2"
B801	2	44'-8"	–	–	STR
B901	5	47'-2"	44'-8"	10"	9"
B902	3	44'-8"	–	–	STR
C401	33	9'-2"	2'-1"	2'-1"	2"
C801	36	12'-9"	11'-10"	8"	6"
F501	33	6'-8"	5'-6"	5"	3¾"
F502	45	8'-8"	7'-6"	5"	3¾"

Bending Diagrams
(Dimensions are out to out of bars)

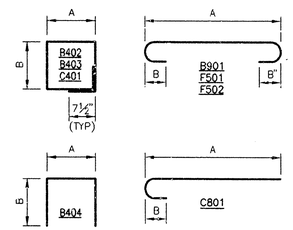

NOTE: DIMENSIONS ARE OUT TO OUT OF BARS.

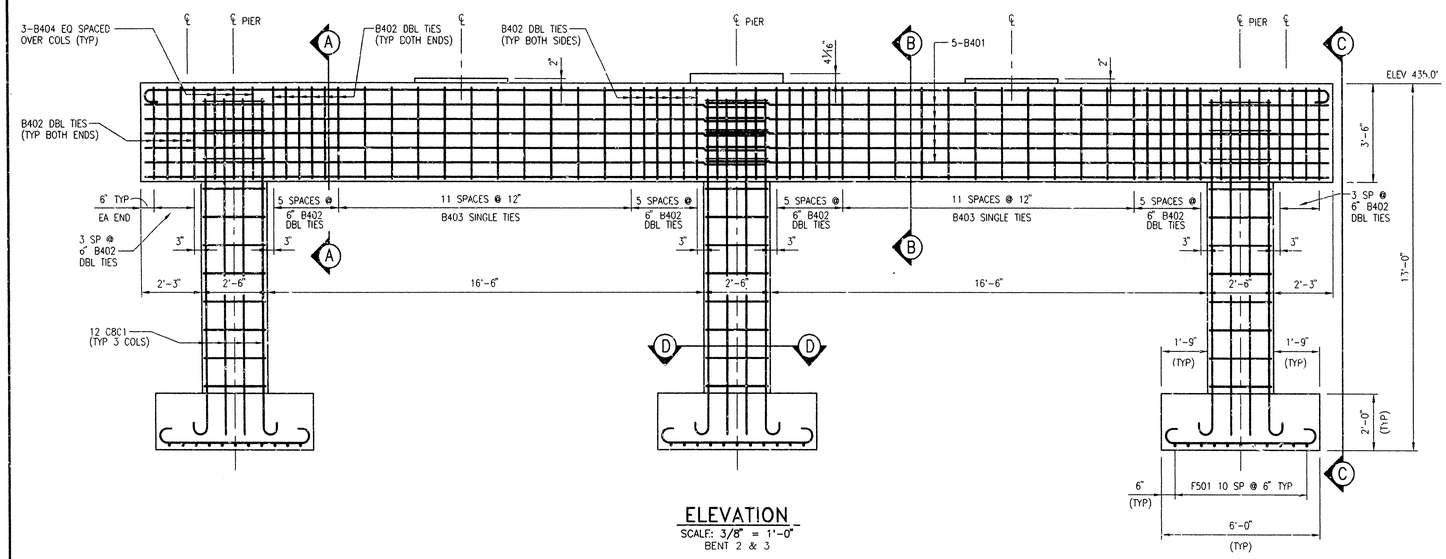

ELEVATION
SCALE: 3/8" = 1'-0"
BENT 2 & 3

SECTION C-C
SCALE: 3/8" = 1'-0"

ALL CONCRETE SHALL BE CLASS "S" AND BE POURED IN THE DRY, ALL EXPOSED CORNERS TO BE CHAMFERED ¾" UNLESS OTHERWISE NOTED.

ALL REINFORCING STEEL SHALL CONFORM TO ASTM A615 OR A617, GRADE 60.

BACKWALL SHALL NOT BE POURED BEFORE BEAMS ARE IN PLACE.

STRUCTURAL STEEL IN END BENTS SHALL BE ASTM A588 AND SHALL BE PAID FOR AS "STRUCTURAL STEEL IN BEAM BEAMS (A588)".

IF ANCHOR BOLTS ARE DRILLED INTO CAP, TOP REINFORCING BARS SHALL BE PROPERLY PLACED TO AVOID DAMAGE.

FOR ADDITIONAL INFORMATION, SEE LAYOUT.

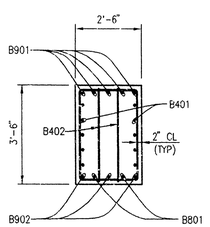

SECTION A-A
SCALE: 3/8" = 1'-0"

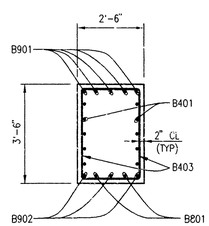

SECTION B-B
SCALE: 3/8" = 1'-0"

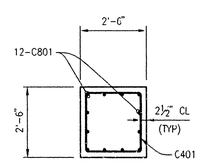

SECTION D-D
SCALE: 3/8" = 1'-0"

DETAILS OF INTERMEDIATE BENTS 2 & 3
FOURCHE CREEK STR. & APPRS.
PULASKI COUNTY
CO. ROUTE 26 SEC.

ARKANSAS STATE HIGHWAY COMMISSION

STATE OF ARKANSAS
REGISTERED PROFESSIONAL ENGINEER
No. 7041
TODD ROBBINS
3-6-95

DRAWN BY: C.H. DATE: 22 FEB 95
CHECKED BY: K.J. DATE: 27 FEB 95
DESIGNED BY: T.R. DATE: 22 FEB 95

SCALE: 3/8" = 1'-0"
FILENAME: 33515.DWG

BRIDGE NO. 4761 DRAWING NO. 36396

FILE NOTE: 3-1-95

DATE REVISED	DATE FILMED	DATE REVISED	DATE FILMED	FED. ROAD DIST. NO.	STATE	FED. AID PROJ. NO.	SHEET NO.	TOTAL SHEETS
				6	ARK.			
				JOB NO.		SA6030	12	39
				① 4761		SPAN DETAILS		36397

Note: Boiled Linseed Oil Treatment shall be applied to the Roadway Surface and the Face and Top of Concrete Parapet Rail.

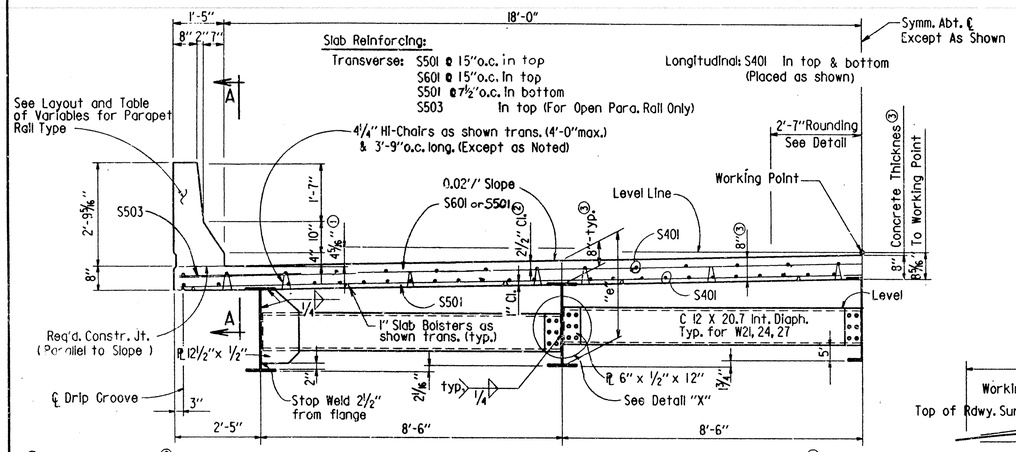

① Working Point to Gutter Line

② Tolerance: Minus = ¼" Plus: Equal to amount of slab thickening used to meet slab thickness tolerance-See Detail A on drwg. no. 14990H.

③ See Detail A, drwg. no. 14990H

HALF-SECTION NEAR MIDSPAN

½" = 1'-0"

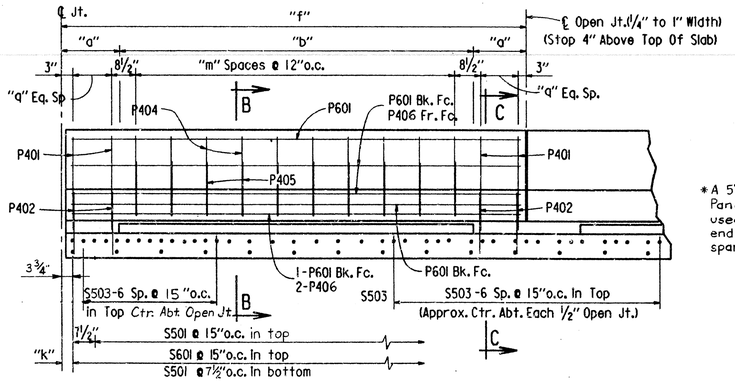

SECTION A-A (FOR OPEN PARAPET RAIL)

½" = 1'-0"

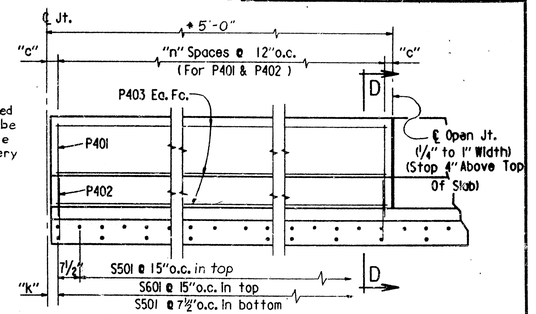

* A 5'-0" Closed Panel will be used at the end of every span

SECTION A-A (FOR CLOSED PARAPET RAIL)

½" = 1'-0"

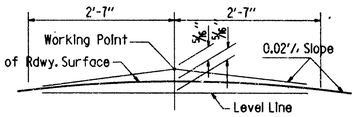

NOTE: Working Point matches Theoretical Roadway Grade.

ROUNDING DETAIL

N.T.S.

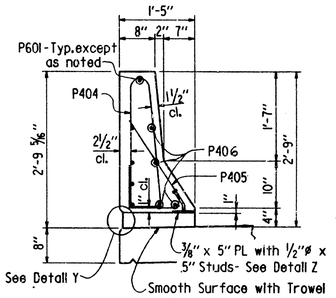

SECTION B-B

¾" = 1'-0"

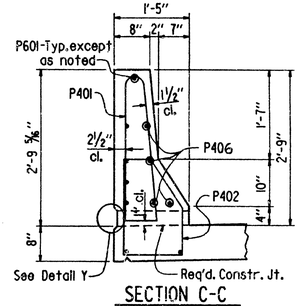

SECTION C-C

¾" = 1'-0"

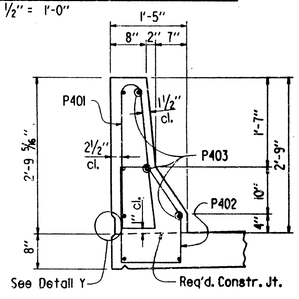

SECTION D-D

¾" = 1'-0"

Expansion Device:
Rdwy. C 15 x 33.9
Conn. ∠'s 7"x 4" x ½"x 8"
Detail Device ⅛" high & provide ¼" Shims using 2- 1/16" & 1- ⅛" PLs

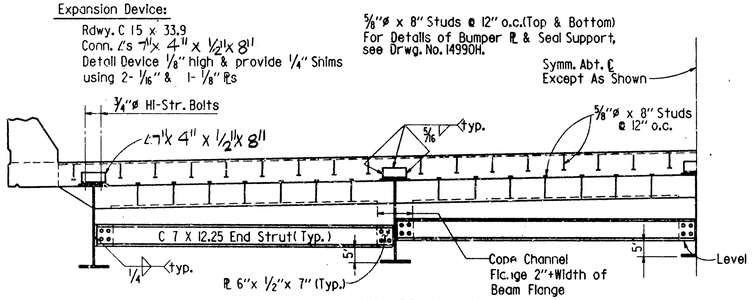

VIEW AT ℄ JOINT

½" = 1'-0"

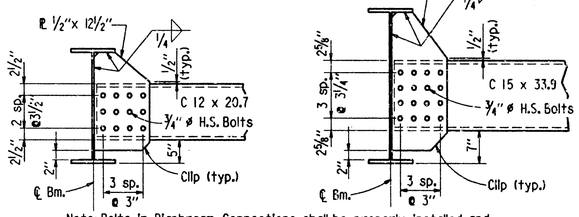

Note: Bolts in Diaphragm Connections shall be properly installed and tightened in accordance with Subsection 807.22 of the Standard Specifications.

FOR W21, 24, 27 (Max. Diaphragm Spacing = 11'-0")

FOR W30, 33, 36 (Max. Diaphragm Spacing = 16'-0")

DIAPHRAGM CONNECTIONS AT EXTERIOR BEAMS

N.T.S.

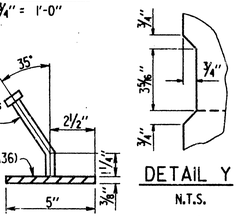

DETAIL Z

N.T.S.

DETAIL Y

N.T.S.

Note: Fillet welds of flange to Cover Plate shall be QC tested by the magnetic particle method at the Contractor's expense.

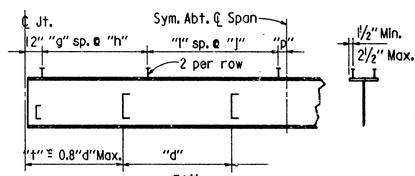

SPACING FOR ⅞" STUD SHEAR CONNECTORS & DIAPHRAGMS

N.T.S.

Note: Stud Shear Connectors shall be 4" long. ¾"ø Studs may be used in place of the ⅞"ø Studs shown, at the ratio of 1.361-¾"ø Studs in place of one ⅞"ø Stud. ⅞"ø Studs will be used as basis for measurement of structural steel in shear connectors. Maximum Stud spacing = 24".

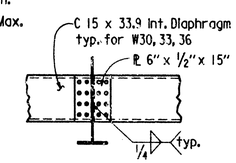

DETAIL X

N.T.S.

Note:
The surfaces of the ⅜" Plates which will not be in contact with concrete shall be painted in accordance with Section 638, or as approved by the Engineer. Only one coat is required and shall be applied in the fabricator's shop. Painting will not be paid for directly, but will be considered subsidiary to Structural Steel or Class S(AE) Concrete-Bridge.

STATE OF ARKANSAS REGISTERED PROFESSIONAL ENGINEER No. 7041 TODD ROBBINS 2-21-95

GENERAL NOTES

All Structural Steel shall be ASTM designation A588 unless otherwise noted and shall be paid for at the unit price per pound bid for "Structural Steel In Beam Spans (A588)". A588 steel shall not be painted. All exposed surfaces to be cleaned in accordance with Subsection 807.67(e) of the Standard Specifications. Structural steel completely embedded in concrete may be ASTM A36.

Beams and cover plates are considered main load carrying members and shall meet the longitudinal Charpy V-Notch test specified in Section 807.05.

Design Specifications: AASHTO 1992 with Interim Specifications

Live loading: HS20 — Method of Design: Load Factor

	Interior Beam	Exterior Beam
Dead Load:		
A. To W-Beam	857 plf + 1.3 (Wt./Ft. of W-Bm.)	661 plf + 1.3 (Wt./Ft. of W-Bm.)
B. To Composite Beam		
Open Parapets	316 plf *	316 plf *
Closed Parapets	329 plf *	329 plf *
Live Load: To each composite beam	1,546 wheels + Impact	1,388 wheels + Impact

* Includes 173 plf future wearing surface

Material Strength:
Class S(AE) Concrete (N=8) — f'c = 4,000 p.s.i.
Reinforcing Steel (A615 or A617) — fy = 60,000 p.s.i.
Structural Steel (A36) — Fy = 36,000 p.s.i.
Structural Steel (A588) — Fy = 50,000 p.s.i.

For additional notes see Std. Drawing No. 14990H

Revised: 11-23-92. LDF

BAR LIST - PER SPAN

	MK	Size	Length	Pin Dia.	** Number Required Span No. 1,2,3 Span Length (S) 40'-0"		
Common Bars							
	P401	4	6'-4"	2"	68		
	P402	4	5'-7"	2"	68		
	P403	4	4'-6"	Str.	24		
	P406	4	4'-6"	Str.	24		
For Open Para. Rail Only	P404	4	5'-10"	2"	30		
	P405	4	3'-2"	2"	30		
	P601	6	4'-6"	Str.	30		

** Per Span

Bending Diagrams (Dimensions are out to out of bars.)

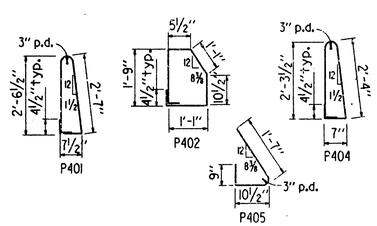

* For S ≤ 40'; Length = S-6"
For 40' < S ≤ 78'; Length = S/2+7"
For S > 78'; Length = S/3+12"

TABLE OF VARIABLES

Bridge No.	Span No.	Span Length (S)	Beam Size	Cover PL Size	"e"	Diaphr. Spacing "d"	Diaphr. Spacing "t"	Variable Of Shear Connector Spacing "g"	"h"	"i"	"j"	"p"	Parapet Joint Spacing No. @ "f"	Open Rail Variables "a"	"b"	"k"	"m"	"q"	Closed Rail Variables "c"	"k"	"n"
1/3	1	40'-0"	W27x84		2'-10½"	See Dwg		13	9	9	12	3	3@10'-0"	2'-6"	5'-0"	7½"	4	3	6"	7½"	4
	2	40'-0"	W27x84		2'-10½"	3289 8		13	9	9	12	3	3@10'-0"	2'-6"	5'-0"	7½"	4	3	6"	7½"	4
						"Details of 400' Composite W-Beams Spans"															

Tabular Data By: TVR Date: 2-21-95 Checked By: KLJ Date: 2-27-95 * A 5'-0" Closed Parapet will be used at the end of every span

DEAD LOAD DEFLECTIONS

Span Length	Load No.	Loading	Location: Int. Beam ¼ Pt.	Int. Beam ½ Pt.	Ext. Beam ¼ Pt.	Ext. Beam ½ Pt.
40'-0"	1	Bm. & Diaph.	1/16	1/16	1/16	1/16
	2	I & Slab	7/16	5/8	5/16	1/2
	3	2 & Parapet	1/2	11/16	3/8	9/16
	1	Bm. & Diaph.				
	2	I & Slab				
	3	2 & Parapet				
	1	Bm. & Diaph.				
	2	I & Slab				
	3	2 & Parapet				

DETAILS OF STANDARD 35'-90' COMPOSITE W-BEAM SPANS CONCRETE PARAPET RAIL

36'-0" CL. RDWY. 0.02'/, PEAKED CROWN

ROUTE SEC.

ARKANSAS STATE HIGHWAY COMMISSION

LITTLE ROCK, ARK.

DRAWN BY: WMAJ DATE: 11-28-90
CHECKED BY: AMS DATE: 11-28-90 SCALE: As Shown
DESIGNED BY: DATE:

BRIDGE NO. 4761 DRAWING NO. 36397

MICROFILMED JUL 3 1 1995

1, 550, 3001, R60016, RWME548, B36WBSPAN.STD

DATE REVISED	DATE FILMED	DATE REVISED	DATE FILMED	FED. RD. DIST. NO.	STATE	FED AID PROJ NO.	SHEET NO.	TOTAL SHEETS
				6	ARK			
				JOB NO.		SA6030	13	39
				(1) 4761		SPAN DETAILS		36398

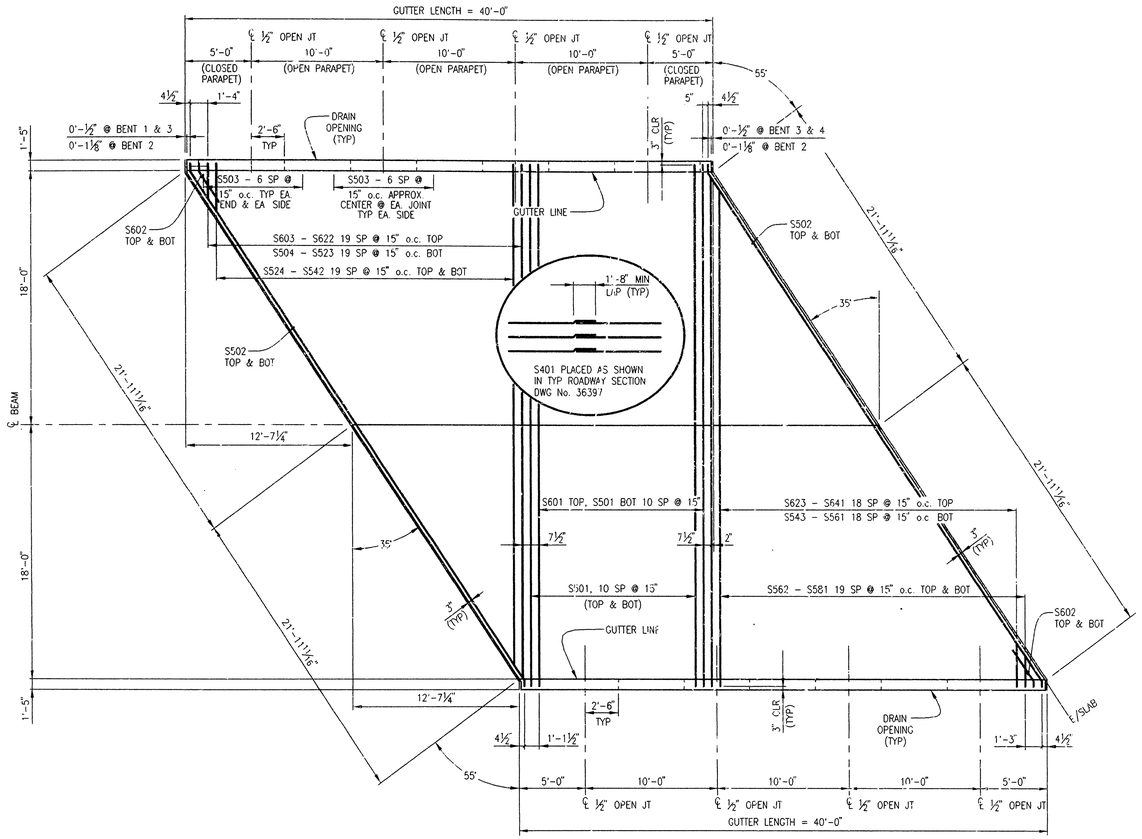

REINFORCING PLAN
SCALE: 3/16" = 1'-0"

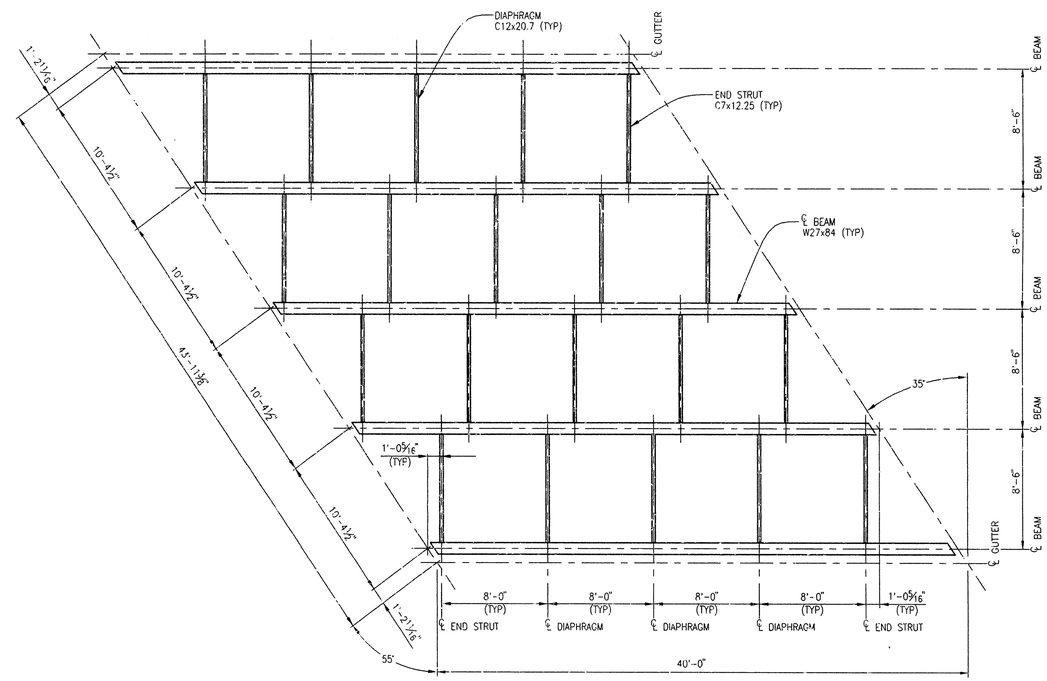

FRAMING PLAN
SCALE: 3/16" = 1'-0"

BAR LIST EACH SPAN

Mark	NO. REQ'D	Length	Pin Dia.	Bending Diagrams (Dimensions are out to out of bars)
S401	152	20'-7"	STR	
S501	33	38'-4"	STR	
S502	4	46'-4⅜"	3¾"	
S503	28	4'-5"	STR	
S504 - S523	1 EA.	VARIES, 2'-6" TO 36'-4"	STR	
S524 - S542	1 EA.	VARIES, 3'-4" TO 35'-6"	STR	
S543 - S561	1 EA.	VARIES, 3'-0" TO 35'-0"	STR	
S562 - S581	1 EA.	VARIES, 2'-4" TO 36'-0"	STR	
S601	11	38'-4"	STR	
S602	4	3'-9"	4½"	
S603 - S622	1 EA.	VARIES, 2'-6" TO 36'-4"	STR	
S623 - S641	1 EA.	VARIES, 3'-0" TO 35'-0"	STR	

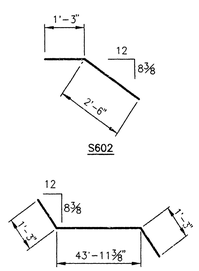

NOTE: DIMENSIONS ARE OUT TO OUT OF BARS.

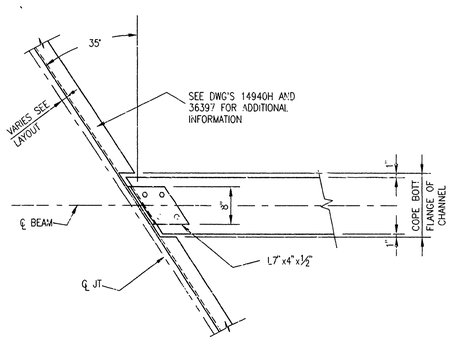

CHANNEL CONNECTION DETAIL
SCALE: N.T.S.

DETAILS OF 40'-0" COMPOSITE W-BEAM SPANS FOURCHE CREEK STRS. & APPR. PULASKI COUNTY

CO. ROUTE 26 SEC.

ARKANSAS STATE HIGHWAY COMMISSION

STATE OF ARKANSAS REGISTERED PROFESSIONAL ENGINEER No.7041 TODD ROBBINS 2-22-95

DRAWN BY: C.H. DATE: 22 FEB 95
CHECKED BY: K.J. DATE: 27 FEB 95
DESIGNED BY: T.R. DATE: 22 FEB 95

SCALE: 3/16" = 1'-0"
FILENAME: 33517.DWG

BRIDGE NO. 4761 DRAWING NO. 36398

MICROFILMED JUL 3 1 1995